CHAPTER 6

ONSITE TREATMENT METHODS

6.1 Introduction

This chapter presents information on the component of an onsite system that provides "treatment" of the wastewater, as opposed to its "disposal" (disposal options for treated wastewater are covered in Chapter 7). Treatment options included in this discussion are:

1. Septic tanks
2. Intermittent sand filters
3. Aerobic treatment units
4. Disinfection units
5. Nutrient removal systems
6. Wastewater segregation and recycle systems

Detailed design, O&M, performance, and construction data are provided for the first four components above. A more general description of nutrient removal is provided as these systems are not yet in general use, and often involve in-house changes in product use and plumbing. A brief mention of wastewater segregation and recycle options is included, since these also function as treatment options.

Options providing a combined treatment/disposal function, i.e., soil absorption systems, are discussed in Chapter 7.

6.1.1 Purpose

The purpose of the treatment component is to transform the raw household wastewater into an effluent suited to the disposal component, such that the wastewater can be disposed of in conformance with public health and environmental regulations. For example, in a subsurface soil absorption system, the pretreatment unit (e.g., septic tank) should remove nearly all settleable solids and floatable grease and scum so that a reasonably clear liquid is discharged into the soil absorption field. This allows the field to operate more efficiently. Likewise, for a surface discharge system, the treatment unit should produce an effluent that will meet applicable surface discharge standards.

6.1.2 Residuals

No treatment process is capable of continuous operation without experiencing some type of residuals buildup. Removal and disposal of these residuals is a very important and often neglected part of overall system O&M.

Residuals handling is discussed in detail under each individual component in Chapters 6 and 7. Final disposal of residuals is covered in Chapter 9.

6.2 Septic Tanks

6.2.1 Introduction

The septic tank is the most widely used onsite wastewater treatment option in the United States. Currently, about 25% of the new homes being constructed in this country use septic tanks for treatment prior to disposal of home wastewater.

This section provides detailed information on the septic tank, its siting considerations, performance, design, construction procedures, and operation and maintenance. The discussion centers on tanks for single-family homes; tanks for larger flows are discussed where they differ from the single-family model.

6.2.2 Description

Septic tanks are buried, watertight receptacles designed and constructed to receive wastewater from a home, to separate solids from the liquid, to provide limited digestion of organic matter, to store solids, and to allow the clarified liquid to discharge for further treatment and disposal. Settleable solids and partially decomposed sludge settle to the bottom of the tank and accumulate. A scum of lightweight material (including fats and greases) rises to the top. The partially clarified liquid is allowed to flow through an outlet structure just below the floating scum layer. Proper use of baffles, tees, and ells protects against scum outflow. Clarified liquid can be disposed of to soil absorption systems, soil mounds, lagoons, or other disposal systems. Leakage from septic tanks is often considered a minor factor; however, if tank leakage causes the level of the scum layer to drop below the outlet baffle, excessive scum discharges can occur. In the extreme case, the sludge layer will dry and compact, and normal tank cleaning

practices will not remove it (1). Another problem, if the tank is not watertight, is infiltration into the tank which can cause overloading of the tank and subsequent treatment and disposal components.

6.2.3 Application

Septic tanks are normally the first component of an onsite system. They must be followed by polishing treatment and/or disposal units. In most instances, septic tank effluent is discharged to a soil absorption field where the wastewater percolates down through the soil. In areas where soils are not suitable for percolation, septic tank effluent can be discharged to mounds or ET beds for treatment and disposal, or to filters or lagoons for further treatment.

Septic tanks are also amenable to chemical addition for nutrient removal, as discussed later in this manual.

Local regulatory agencies may require that the septic tank be located specified distances from home, water well, and water lines to reduce any risk of disease-causing agents from the septic tank reaching the potable water supply. A number of minimum separation distances have been developed for protecting water supplies and homes from septic tank disposal systems, but these are largely arbitrary and depend to a great degree on the soil conditions. Many state and local building codes feature suggested separation distances that should be adhered to in the absence of any extenuating circumstances.

6.2.4 Performance

Table 6-1 summarizes septic tank effluent quality. In addition to the tabulated results, bacterial concentrations in the effluent are not significantly changed since septic tanks cannot be relied upon to remove disease-causing microorganisms. Oil and grease removal is typically 70 to 80%, producing an effluent of about 20-25 mg/l. Phosphorus removal is slight, at about 15%, providing an effluent quality of about 20 mg/l total P.

Brandes (7) studied the quality of effluents from septic tanks treating graywater and blackwater. He found that without increasing the volume of the septic tank, the efficiency of the blackwater (toilet wastewater) treatment was improved by discharging the household graywater to a separate treatment disposal system.

TABLE 6-1

SUMMARY OF EFFLUENT DATA FROM VARIOUS SEPTIC TANK STUDIES

Parameter	Source: Ref. (2) 7 Sites	Ref. (3) 10 Tanks	Ref. (4) 19 Sites	Ref. (5) 4 Sites	Ref. (6) 1 Tank
BOD_5					
Mean, mg/l	138	138[a]	140	240[b]	120
Range, mg/l	7-480	64-256	--	70.385	30-280
No. of Samples	150	44	51	21	50
COD					
Mean, mg/l	327	--	--	--	200
Range, mg/l	25-780	--	--	--	71-360
No. of Samples	152	--	--	--	50
Suspended Solids					
Mean, mg/l	49	155[a]	101	95[b]	39
Range, mg/l	10-695	43-485	--	48-340	8-270
No. of Samples	148	55	51	18	47
Total Nitrogen					
Mean, mg/l	45	--	36	--	--
Range, mg/l	9-125	--	--	--	--
No. of Samples	99	--	51	--	--

[a] Calculated from the average values from 10 tanks, 6 series of tests.

[b] Calculated on the basis of a log-normal distribution of data.

Factors affecting septic tank performance include geometry, hydraulic loading, inlet and outlet arrangements, number of compartments, temperature, and operation and maintenance practices. If a tank is hydraulically overloaded, retention time may become too short and solids may not settle or float properly.

A single-compartment tank will give acceptable performance. However, multi-compartment tanks perform somewhat better than single-compartment tanks of the same total capacity, because they provide better protection against solids carry-over into discharge pipes during periods of surges or upset due to rapid digestion.

Improper design and placement of baffles can create turbulence in the tank, seriously impairing settling efficiency. In addition, poor baffles or outlet devices may promote scum or sludge entry to discharge pipes. Obviously, improper operation and maintenance will impair performance. Flushing problem wastes (paper towels, bones, fats, diapers, etc.) into the system can clog piping. Failure to pump out accumulated solids will eventually lead to problems with solids discharge in the effluent.

6.2.5 Design

6.2.5.1 General

Septic tanks for single-family homes are usually purchased "off the shelf," ready for installation, and are normally designed in accordance with local codes.

The tank must be designed to ensure removal of almost all settleable solids. To accomplish this, the tank must provide:

1. Liquid volume sufficient for a 24-hr fluid retention time at maximum sludge depth and scum accumulation (8).

2. Inlet and outlet devices to prevent the discharge of sludge or scum in the effluent.

3. Sufficient sludge storage space to prevent the discharge of sludge or scum in the effluent.

4. Venting provisions to allow for the escape of accumulated methane and hydrogen sulfide gases.

6.2.5.2 Criteria

The first step in selecting a tank volume is to determine the average volume of wastewater produced per day. Ideally, this is done by metering wastewater flows for a given period; but that is seldom feasible, particularly if a septic tank system is being selected for a building still under construction.

In the past, the design capacity of most septic tanks was based on the number of bedrooms per home and the average number of persons per bedroom. Chapter 4 showed that the average wastewater contribution is about 45 gpcd (170 lpcd) (2). As a safety factor, a value of 75 gpcd (284 lpcd) can be coupled with a potential maximum dwelling density of two persons per bedroom, yielding a theoretical design flow of 150 gal/bedroom/day (570 l/bedroom/day). A theoretical tank volume of 2 to 3 times the design daily flow is common, resulting in a total tank design capacity of 300 to 450 gal per bedroom (1,140 to 1,700 l per bedroom).

While not ideal, most state and local codes rely on some version of this method by assigning required septic tank capacities solely by the number of bedrooms (see Table 6-2). Unfortunately, hourly and daily flows from the home can vary greatly. During high flow periods, higher solids concentrations are discharged from the septic tank. Well-designed, two-compartment tanks reduce the effect of peak hour loads.

Another key factor in the design and performance of septic tanks is the relationship between surface area, surge storage, discharge rate, and exit velocity. These parameters affect the hydraulic efficiency and sludge retention capacity of the tank.

Tanks with greater surface area and shallower depth are preferred, because increased liquid surface area increases surge storage capacity; a given inflowing volume creates a smaller rise in water depth and a slower discharge rate and exit velocity. These surges of flow through the tank are dampened as surface area increases. This allows a longer time for separation of sludge and scum that are mixed by turbulence resulting from the influent surge (8).

In addition to increasing the surface area, there are two other means of reducing the exit velocity and reducing the opportunity for solids and scum to escape through the outlet. These are: 1) increase the size of the outlet riser; and 2) reduce the size of the final discharge pipe. The use of a 6-in. (15-cm) outlet riser instead of a 4-in. (10-cm)

TABLE 6-2

TYPICAL SEPTIC TANK LIQUID VOLUME REQUIREMENTS

	Federal Housing Authority	U.S. Public Health Service	Uniform Plumbing Code	Range of State Requirements (9)
Minimum, gal	750	750	750	500 - 1,000
1-2 bedrooms, gal	750	750	750	500 - 1,000
3 bedrooms, gal	900	900	1,000	900 - 1,500
4 bedrooms, gal	1,000	1,000	1,200	1,000 - 2,000
5 bedrooms, gal	1,250	1,250	1,500	1,100 - 2,000
Additional bedrooms (ea), gal	250	250	150	-

outlet riser will reduce the exit velocity from 0.025 ft/sec to 0.011 ft/sec (0.76 cm/sec to 0.34 cm/sec) a reduction of 56% (8).

Use of garbage grinders increases both the settleable and floatable solids in the wastewater and their accumulation rates in the septic tank. U.S. Public Health Service (USPHS) studies indicate that the increase in the sludge and scum accumulation rate is about 37% (10). This means either more frequent pumping or a larger tank to keep the pumping frequency down. A common expedient is to add 250 gal (946 l) to the tank size when garbage grinders are used, although this volume is arbitrary. It is generally a good idea to avoid the use of garbage grinders with onsite systems.

6.2.5.3 Inlet and Outlet Devices

The flow out of a septic tank should carry only minimal concentrations of settleable solids. Higher concentrations can occur if:

1. The inlet turbulence in a single-compartment tank causes mixing of the sludge with the wastewater in the clear space.
2. The rise velocity of the water in the vertical leg of the outlet tee resuspends previously captured solids.
3. The rising gases produced by anaerobic digestion interfere with particle-settling and resuspend previously captured solids, which then are lost in the effluent.

The inlet to a septic tank should be designed to dissipate the energy of the incoming water, to minimize turbulence, and to prevent short-circuiting. The inlet should preferably be either a sanitary tee or baffle. The baffle should be small enough so that it is flushed out each time, and yet keeps floating solids from blocking the inlet. The invert radius in a tee helps dissipate energy in the transition from horizontal to vertical flow, and prevents dripping that, at the proper frequency, can amplify water surface oscillations and increase intercompartmental mixing. The vertical leg of the inlet tee should extend below the liquid surface. This minimizes induced turbulence by dissipating as much energy in the inlet as possible.

The outlet structure's ability to retain sludge and scum in either the first or second compartment is a major factor in overall task performance. The outlet of a septic tank can be a tee, a baffle, or some special structure (see Figure 6-1). The outlet must have the proper submergence and height above liquid level such that the sludge

FIGURE 6-1

TYPICAL SEPTIC TANK OUTLET STRUCTURES TO MINIMIZE SUSPENDED SOLIDS IN DISCHARGE(11)

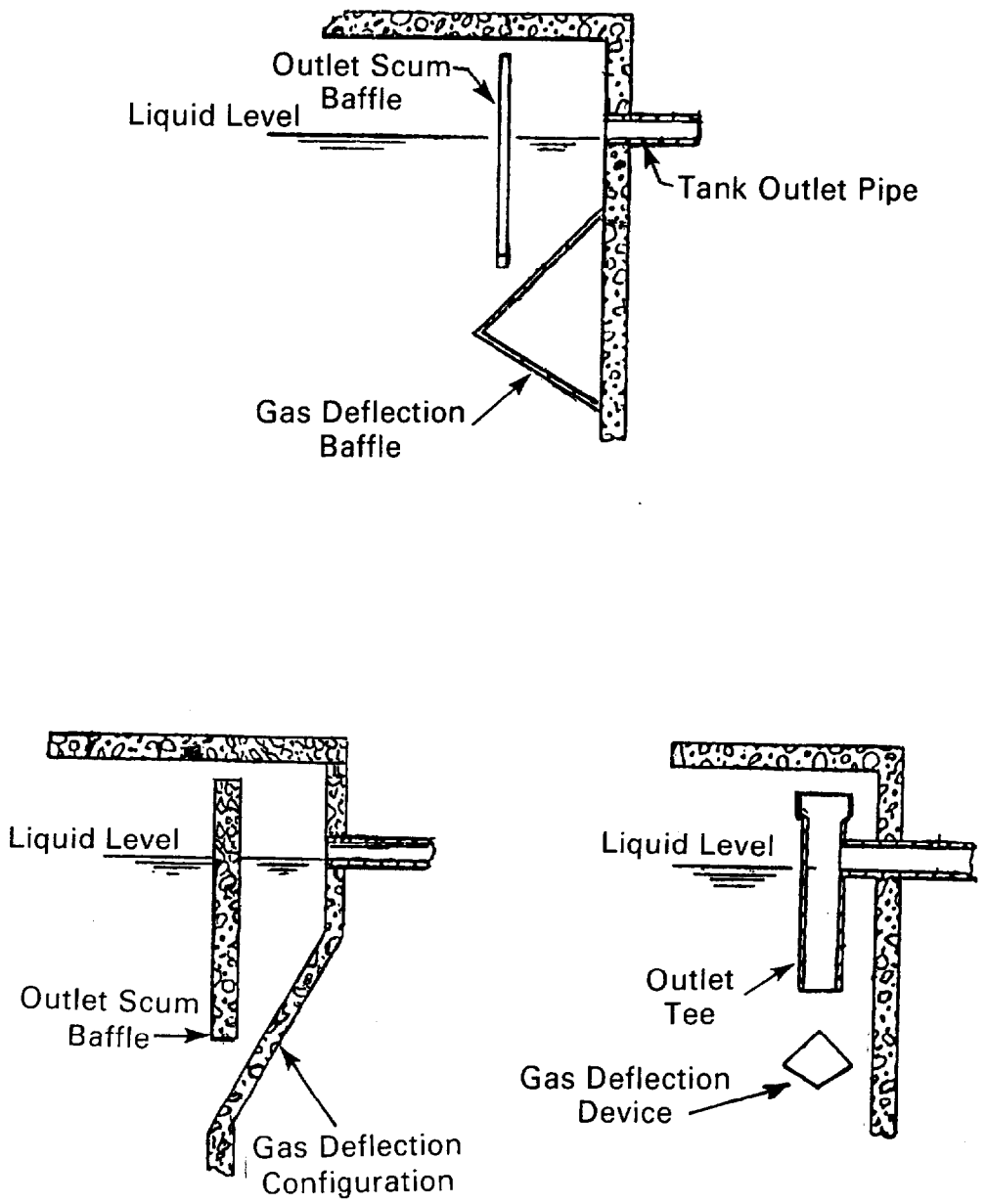

and scum clear spaces balance, and proper venting of sludge gases is provided (see Figure 6-2). Although the Manual of Septic Tank Practices recommends an outlet submergence equal to 40% of the liquid depth, other studies have shown that shallower submergence decreases solids discharges and allows for greater sludge accumulation, and thus for less frequent pumping (8). Table 6-3 summarizes the results of these studies.

As shown in Figure 6-1, various types of gas deflection baffles and wedges have been developed to prevent gas-disturbed sludge from entering the rising leg of the outlet.

6.2.5.4 Compartmentation

Recent trends in septic tank design favor multiple, rather than single, compartmented tanks. When a tank is properly divided into compartments, BOD and SS removal are improved. Figure 6-3 shows a typical two-compartment tank.

The benefits of compartmentation are due largely to hydraulic isolation, and to the reduction or elimination of intercompartmental mixing. Mixing can occur by two means: water oscillation and true turbulence. Oscillatory mixing can be minimized by making compartments unequal in size (commonly the second compartment is 1/3 to 1/2 the size of the first), reducing flow-through area, and using an ell to connect compartments (1).

In the first compartment, some mixing of sludge and scum with the liquid always occurs due to induced turbulence from entering wastewater and the digestive process. The second compartment receives the clarified effluent from the first compartment. Most of the time it receives this hydraulic load at a lower rate and with less turbulence than does the first compartment, and, thus, better conditions exist for settling low-density solids. These conditions lead to longer working periods before pump-out of solids is necessary and improve overall performance.

6.2.5.5 Access and Inspection

In order to provide access and a means to inspect the inside of the septic tank, manholes should be provided. Manholes are usually placed over both the inlet and the outlet to permit cleaning behind the baffles. The manhole cover should extend above the actual septic tank to a height not more than 6 in. (15 cm) below the finished grade. The actual cover can extend to the ground surface if a proper seal is provided to prevent

FIGURE 6-2

SEPTIC TANK SCUM AND SLUDGE CLEAR SPACES (8)

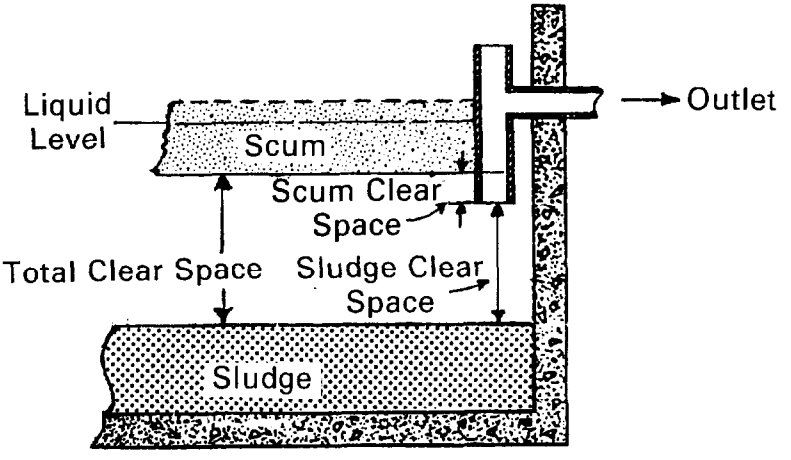

TABLE 6-3

LOCATION OF TOP AND BOTTOM OF OUTLET TEE OR BAFFLE (12)

Total Liquid Tank Capacity gal	Tank Receiving Sewage		Tank Receiving Sewage and Garbage	
	Projection[a] Above Liquid Level	Penetration[a] Below Liquid Level	Projection[a] Above Liquid Level	Penetration[a] Below Liquid Level
500	12	22	--	--
750	12	24	18	38
1,000	12	26	18	41

[a] Percentage of liquid depth. See Figure 6-2 for diagram.

FIGURE 6-3

TYPICAL TWO-COMPARTMENT SEPTIC TANK

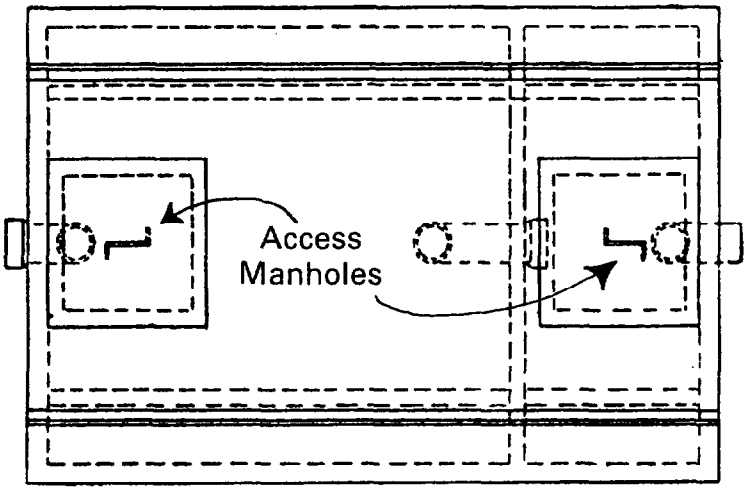

Plan

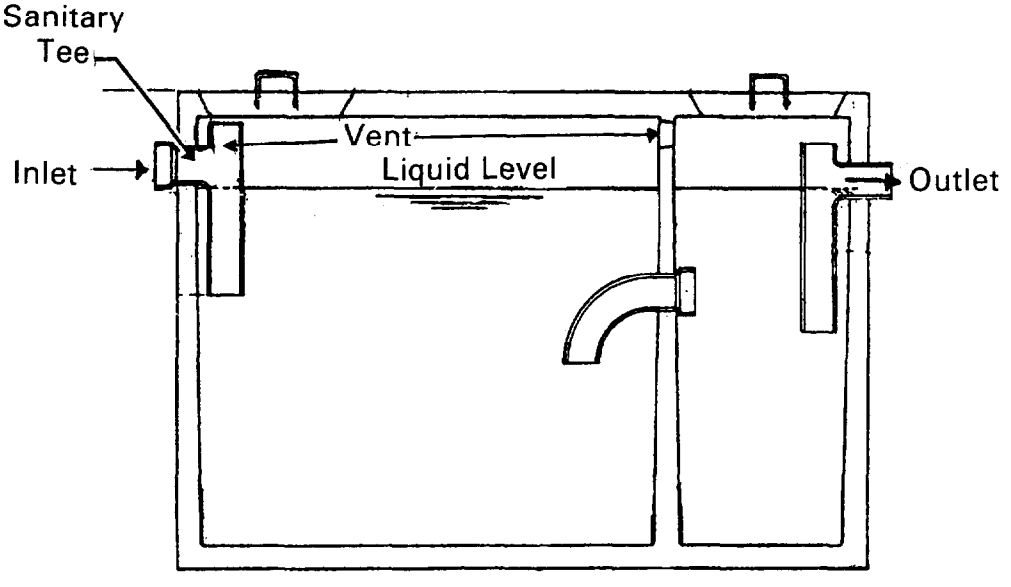

Longitudinal Section

the escape of odors and accidental entry into the tank. In addition, small inspection pipes can be placed over the inlet and outlet to allow inspection without having to remove the manhole.

6.2.5.6 Materials

The most commonly used construction material for septic tanks is concrete. Virtually all individual-home septic tanks are precast for easy installation in the field. The walls have a thickness of 3 to 4 in. (8 to 10 cm), and the tank is sealed for watertightness after installation with two coats of bituminous coating. Care must be taken to seal around the inlet and discharge pipes with a bonding compound that will adhere both to concrete and to the inlet and outlet pipe.

Steel is another type of material that has been used for septic tanks. The steel must be treated so as to be able to resist corrosion and decay. Such protection includes bituminous coating or other corrosion-resistant treatment. However, despite a corrosion-resistant coating, tanks deteriorate at the liquid level. Past history indicates that steel tanks have a short operational life (less than 10 years) due to corrosion (3).

Other materials include polyethylene and fiberglass. Plastic and fiberglass tanks are very light, easily transported, and resistant to corrosion and decay. While these tanks have not had a good history, some manufacturers are now producing an excellent tank with increased strength. This minimizes the chance of damage during installation or when heavy machinery moves over it after burial.

6.2.6 Installation Procedures

The most important requirement of installation is that the tank be placed on a level grade and at a depth that provides adequate gravity flow from the home and matches the invert elevation of the house sewer. The tank should be placed on undisturbed soil so that settling does not occur. If the excavation is dug too deep, it should be backfilled to the proper elevation with sand to provide an adequate bedding for the tank. Tank performance can be impaired if a level position is not maintained, because inlet and outlet structures will not function properly.

Other considerations include:

1. Cast iron inlet and outlet structures should be used in disturbed soil areas where tank settling may occur.

2. Flotation collars should be used in areas with high groundwater potential.

3. The tank should be placed so that the manhole is slightly below grade to prevent accidental entry.

4. The tank should be placed in an area with easy access to alleviate pump-out problems.

5. During installation, any damage to the watertight coating should be repaired. After installation, the tank should be tested for watertightness by filling with water.

6. Care should be taken with installation in areas with large rocks to prevent undue localized stresses.

7. Baffles, tees, and elbows should be made of durable and corrosion-proof materials. Fiberglass or acid-resistant concrete baffle materials are most suitable. Vitrified clay tile, plastic, and cast iron are best for tees and ells.

6.2.7 Operation and Maintenance

One of the major advantages of the septic tank is that it has no moving parts and, therefore, needs very little routine maintenance. A well-designed and maintained concrete, fiberglass, or plastic tank should last for 50 years. Because of corrosion problems, steel tanks can be expected to last no more than 10 years. One cause of septic tank problems involves a failure to pump out the sludge solids when required. As the sludge depth increases, the effective liquid volume and detention time decrease. As this occurs, sludge scouring increases, treatment efficiency falls off, and more solids escape through the outlet. The only way to prevent this is by periodic pumping of the tank.

Tanks should be inspected at intervals of no more than every 2 years to determine the rates of scum and sludge accumulation. If inspection programs are not carried out, a pump-out frequency of once every 3 to 5 years is reasonable. Once the characteristic sludge accumulation rate is known, inspection frequency can be adjusted accordingly. The inlet and outlet structures and key joints should be inspected for damage after each tank pump-out.

Actual inspection of sludge and scum accumulations is the only way to determine definitely when a given tank needs to be pumped. When a tank is inspected, the depth of sludge and scum should be measured in the vicinity of the outlet baffle. The tank should be cleaned whenever: (1) the bottom of the scum layer is within 3 in. of the bottom of the outlet device; or (2) the sludge level is within 8 in. of the bottom of the outlet device. The efficiency of suspended solids removal may start to decrease before these conditions are reached.

Scum can be measured with a stick to which a weighted flap has been hinged, or with any device that can be used to feel the bottom of the scum mat. The stick is forced through the mat, the hinged flap falls into a horizontal position, and the stick is raised until resistance from the bottom of the scum is felt. With the same tool, the distance to the bottom of the outlet device can be determined.

A long stick wrapped with rough, white toweling and lowered to the bottom of the tank will show the depth of sludge and the liquid depth of the tank. The stick should be lowered behind the outlet device to avoid scum particles. After several minutes, the sludge layer can be distinguished by sludge particles clinging to the toweling.

Other methods for measuring sludge include connecting a small pump to a clear plastic line and lowering the line until the pump starts to draw high solids concentrations.

Following is a list of considerations pertaining to septic tank operation and maintenance:

1. Climbing into septic tanks can be very dangerous, as the tanks are full of toxic gases. When using the manhole, take every precaution possible, i.e., do not lower an individual into the tank without a proper air supply, and safety rope tied around chest or waist.

2. The manhole, not the inspection pipe, should be used for pumping so as to minimize the risk of harm to the inlet and outlet baffles.

3. Leaving solids in the septic tank to aid in starting the system is not necessary.

4. When pumped, the septic tank must not be disinfected, washed, or scrubbed.

5. Special chemicals are not needed to start activity in a septic tank.

6. Special additives are not needed to improve or assist tank operation once it is under way. No chemical additives are needed to "clean" septic tanks. Such compounds may cause sludge bulking and decreased sludge digestion. However, ordinary amounts of bleaches, lyes, caustics, soaps, detergents, and drain cleaners do not harm the system. Other preparations, some of which claim to eliminate the need for septic tank pumping, are not necessary for proper operation and are of questionable value.

7. Materials not readily decomposed (e.g., sanitary napkins, coffee grounds, cooking fats, bones, wet-strength towels, disposable diapers, facial tissues, cigarette butts) should never be flushed into a septic tank. They will not degrade in the tank, and can clog inlets, outlets, and the disposal systems.

6.2.8 Considerations for Multi-Home and Commercial Wastewater

6.2.8.1 General

In some instances, a septic tank can serve several homes, or a commercial/institutional user such as a school, store, laundry, or restaurant. Whereas septic tanks for single-family homes must handle highly variable flows (i.e., approximately 45% of the total household flow occurs in the peak four hours), commercial systems must also be able to treat continuous wastewater flows for 8-16 hours a day as well as peak loadings. In addition, commercial wastewaters may present special problems that need to be handled prior to discharge to the septic tank (i.e., grease removal for restaurant wastewaters, and lint removal for laundry wastewater).

As explained previously, septic tanks of two compartments give better results than single-compartment tanks. Although single-compartment tanks are acceptable for small household installations, tanks with two compartments should be provided for the larger institutional systems. Tanks with more than two compartments are not used frequently.

Multiple-compartment tanks for commercial/institutional flows should have the same design features as single-family home tanks discussed above. These include: compartments separated by walls with ports or slits at proper elevations, proper venting, access to all compartments, and proper inlet and outlet design and submergence.

The effect of a multiple-compartment tank can be accomplished by using two or more tanks in series. A better construction arrangement, particularly for medium or large installations, is to connect special tank sections together into a unit having single end-walls and two compartments. A unit of four precast tank sections forming two compartments is shown in Figure 6-4.

6.2.8.2 Design

Larger tanks for commercial/institutional flows or for clusters of homes must be sized for the intended flow. Whenever possible with existing facilities, the flow should be metered to obtain accurate readings on average daily flows and flow peaks. For housing clusters, if the total flow cannot be measured, the individually metered or estimated flows (based on the expected population and the generation rate of 45 gal/cap/day (170 l/cap/day) from each house must be summed to determine the design flow. For commercial/institutional applications, consult Chapter 4. For flows between 750 and 1,500 gal per day (2,840 to 5,680 l per day), the capacity of the tank is normally equal to 1-1/2 days wastewater flow. For flows between 1,500 and 15,000 gpd (5,680 to 56,800 lpd), the minimum effective tank capacity can be calculated at 1,125 gal (4,260 l) plus 75% of the daily flow; or

$$V = 1{,}125 + 0.75Q$$

where:

V = net volume of the tank (gal)
Q = daily wastewater flow (gal)

If garbage grinders are used, additional volume or extra sludge storage may be desired to minimize the frequency of pumping (10).

6.3 Intermittent Sand Filters

6.3.1 Introduction

Intermittent sand filtration may be defined as the intermittent application of wastewater to a bed of granular material which is underdrained to collect and discharge the final effluent. One of the oldest methods of wastewater treatment known, intermittent sand filtration, if properly designed, operated, and constructed, will produce effluents of very high quality. Currently, many intermittent sand filters are used throughout the United States to treat wastewater from small commercial and institutional developments and from individual

FIGURE 6-4

FOUR PRECAST REINFORCED CONCRETE SEPTIC TANKS COMBINED INTO ONE UNIT FOR LARGE FLOW APPLICATION (10)

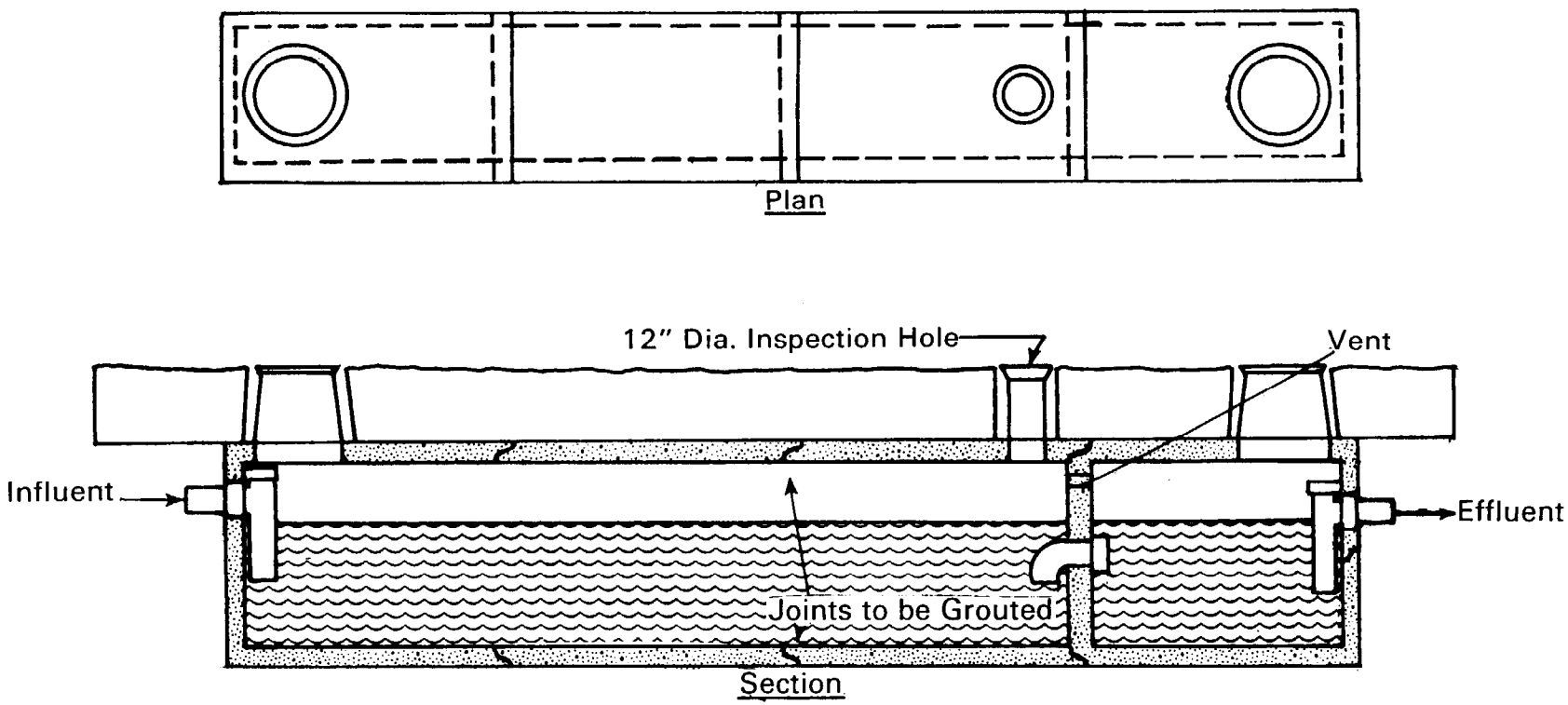

homes. The use of intermittent sand filters for upgrading stabilization ponds has also become popular (13).

Intermittent sand filtration is well suited to onsite wastewater treatment and disposal. The process is highly efficient, yet requires a minimum of operation and maintenance. Normally, it would be used to polish effluents from septic tank or aerobic treatment processes and would be followed by disinfection (as required) prior to reuse or disposal to land or surface waters.

6.3.2 Description

Intermittent sand filters are beds of granular materials 24 to 36 in. (61 to 91 cm) deep and underlain by graded gravel and collecting tile. Wastewater is applied intermittently to the surface of the bed through distribution pipes or troughs. Uniform distribution is normally obtained by dosing so as to flood the entire surface of the bed.

Filters may be designed to provide free access (open filters), or may be buried in the ground (buried filters). A relatively new concept in filtration employs recirculation of filter effluent (recirculating filters).

The mechanisms of purification attained by intermittent sand filters are complex and not well understood even today. Filters provide physical straining and sedimentation of solid materials within the media grains. Chemical sorption also plays a role in the removal of some materials. However, successful treatment of wastewaters is dependent upon the biochemical transformations occurring within the filter. Without the assimilation of filtered and sorbed materials by biological growth within the filter, the process would fail to operate properly. There is a broad range of trophic levels operating within the filter, from the bacteria to annelid worms.

Since filters entrap, sorb, and assimilate materials in the wastewater, it is not surprising to find that the interstices between the grains may fill, and the filter may eventually clog. Clogging may be caused by physical, chemical, and biological factors. Physical clogging is normally caused by the accumulation of stable solid materials within or on the surface of the sand. It is dependent on grain size and porosity of the filter media, and on wastewater suspended solids characteristics. The precipitation, coagulation, and adsorption of a vareity of materials in wastewater may also contribute to the clogging problem in some filter operations (14). Biological clogging is due primarily to an improper

balance of the intricate biological population within the filter. Toxic components in the wastewater, high organic loading, absence of dissolved oxygen, and decrease in filter temperatures are the most likely causes of microbial imbalances. Accumulation of biological slimes and a decrease in the rate of decomposition of entrapped wastewater contaminants within the filter accelerates filter clogging. All forms of pore clogging likely occur simultaneously throughout the filter bed. The dominant clogging mechanism is dependent upon wastewater characteristics, method and rate of wastewater application, characteristics of the filtering media, and filter environmental conditions.

6.3.3 Application

Intermittent sand filtration is well adapted to onsite disposal. Its size is limited by land availability. The process is applicable to single homes and clusters of dwellings. The wastewater applied to the intermittent filters should be pretreated at least by sedimentation. Septic tanks should be required as a minimum. Additional pretreatment by aerobic biological processes normally results in higher acceptable rates of wastewater application and longer filter runs. Although extensive field experience is lacking to date, the application of pretreated graywaters to intermittent sand filters may be advantageously employed. There is some evidence that higher loading rates and longer filter runs can be achieved with pretreated graywaters.

Site constraints should not limit the application of intermittent sand filters, although odors from open filters receiving septic tank effluent may require isolation of the process from dwellings. Filters are often partially (or completely) buried in the ground, but may be constructed above ground when dictated by shallow bedrock or high water tables. Covered filters are required in areas with extended periods of subfreezing weather. Excessive long-term rainfall and runoff on submerged filter systems may be detrimental to performance, requiring appropriate measures to divert these sources away from the system.

6.3.4 Factors Affecting Performance

The degree of stabilization attained by an intermittent sand filter is dependent upon: (1) the type and biodegradability of wastewater applied to the filter, (2) the environmental conditions within the filter, and (3) the design characteristics of the filter.

Reaeration and temperature are two of the most important environmental conditions that affect the degree of wastewater purification through an intermittent sand filter. Availability of oxygen within the pores

allows for the aerobic decomposition of the wastewater. Temperature directly affects the rate of microbial growth, chemical reactions, adsorption mechanisms, and other factors that contribute to the stabilization of wastewater within the sand media.

Proper selection of process design variables also affects the degree of purification of wastewater by intermittent filters. A brief discussion of those variables is presented below.

6.3.4.1 Media Size and Distribution

The successful use of a granular material as a filtering media is dependent upon the proper choice of size and uniformity of the grains. Filter media size and uniformity are expressed in terms of "effective size" and "uniformity coefficient." The effective size is the size of the grain, in millimeters, such that 10% by weight are smaller. The uniformity coefficient is the ratio of the grain size that has 60% by weight finer than itself to the size which has 10% finer than itself. The effective size of the granular media affects the quantity of wastewater that may be filtered, the rate of filtration, the penetration depth of particulate matter, and the quality of the filter effluent. Granular media that is too coarse lowers the retention time of the applied wastewater through the filter to a point where adequate biological decomposition is not attained. Too fine a media limits the quantity of wastewater that may be successfully filtered, and will lead to early filter clogging. This is due to the low hydraulic capacity and the existence of capillary saturation, characteristic of fine materials. Metcalf and Eddy (15) and Boyce (16) recommended that not more than 1% of the media should be finer than 0.13 mm. Many suggested values for the effective size and uniformity coefficient exist in the literature (10)(17)(18)(19)(20). Recommended filter media effective sizes range from a minimum of 0.25 mm up to approximately 1.5 mm. Uniformity coefficients (UC) for intermittent filter media normally should be less than 4.0.

Granular media other than sand that have been used include anthracite, garnet, ilmenite, activated carbon, and mineral tailings. The media selected should be durable and insoluble in water. Total organic matter should be less than 1%, and total acid soluble matter should not exceed 3%. Any clay, loam, limestone, or organic material may increase the initial adsorption capacity of the sand, but may lead to a serious clogging condition as the filter ages.

Shapes of individual media grains include round, oval, and angular configurations. Purification of wastewater infiltrating through granular media is dependent upon the adsorption and oxidation of organic matter in the wastewater. To a limiting extent, this is dependent on the shape

of the grain; however, it is more dependent on the size distribution of the grains, which is characterized by the UC.

The arrangement or placement of different sizes of grains throughout the filter bed is also an important design consideration. A homogeneous bed of one effective size media does not occur often due to construction practices and variations in local materials. In a bed having fine media layers placed above coarse layers, the downward attraction of wastewater is not as great due to the lower amount of cohesion of the water in the larger pores (21). The coarse media will not draw the water out of the fine media, thereby causing the bottom layers of the fine material to remain saturated with water. This saturated zone acts as a water seal, limits oxidation, promotes clogging, and reduces the action of the filter to a mere straining mechanism. The use of media with a UC of less than 4.0 minimizes this problem.

The media arrangement of coarse over fine appears theoretically to be the most favorable, but it may be difficult to operate such a filter due to internal clogging throughout the filter.

6.3.4.2 Hydraulic Loading Rate

The hydraulic loading rate may be defined as the volume of liquid applied to the surface area of the sand filter over a designated length of time. Hydraulic loading is normally expressed as gpd/ft^2, or cm/day. Values of recommended loading rates for intermittent sand filtration vary throughout the literature and depend upon the effective size of sand and the type of wastewater. They normally range from 0.75 to 15 gpd/ft^2 (0.3 to 0.6 m^3/m^2/d).

6.3.4.3 Organic Loading Rate

The organic loading rate may be defined as the amount of soluble and insoluble organic matter applied per unit volume of filter bed over a designated length of time. Organic loading rates are not often reported in the literature. However, early investigators found that the performance of intermittent sand filters was dependent upon the accumulation of stable organic material in the filter bed (14)(21). To account for this, suggested hydraulic loading rates today are often given for a particular type of wastewater. Allowable loading rates increase with the degree of pretreatment. A strict relationship establishing an organic loading rate, however, has not yet been clearly defined in the literature.

6.3.4.4 Depth of Media

Depths of intermittent sand filters were initially designed to be 4 to 10 feet; however, it was soon realized at the Lawrence Experimental Station (21) that most of the purification of wastewater occurred within the top 9 to 12 in. (23 to 30 cm) of the bed. Additional bed depth did not improve the wastewater purification to any significant degree. Most media depths used today range from 24 to 42 in. (62 to 107 cm). The use of shallow filter beds helps to keep the cost of installation low. Deeper beds tend to produce a more constant effluent quality, are not affected as severely by rainfall or snow melt (22), and permit the removal of more media before media replacement becomes necessary.

6.3.4.5 Dosing Techniques and Frequency

Dosing techniques refer to methods of application of wastewater to the intermittent sand filter. Dosing of intermittent filters is critical to the performance of the process. The system must be designed to insure uniform distribution of wastewater throughout the filter cross-section. Sufficient resting must also be provided between dosages to obtain aerobic conditions. In small filters, wastewater is applied in doses large enough to entirely flood the filter surface with at least 3 in. (8 cm) of water, thereby insuring adequate distribution. Dosing frequency is dependent upon media size, but should be greater with smaller doses for coarser media.

Dosing methods that have been used include ridge and furrow application, drain tile distribution, surface flooding, and spray distribution methods. Early sand filters for municipal wastewater were surface units that normally employed ridge and furrow or spray distribution methods. Intermittent filters in use today are often built below the ground surface and employ tile distribution.

The frequency of dosing intermittent sand filters is open to considerable design judgement. Most of the earlier studies used a dosing frequency of 1/day. The Florida studies investigatged multiple dosings and concluded that the BOD removal efficiency of filters with media effective size greater than 0.45 mm is appreciably increased when the frequency of loading is increased beyond twice per day (23). This multiple dosing concept is successfully used in recirculating sand filter systems in Illinois (24), which employ a dosing frequency of once every 30 min.

6.3.4.6 Maintenance Techniques

Various techniques to maintain the filter bed may be employed when the bed becomes clogged. Some of these include: (1) resting the bed for a period of time, (2) raking the surface layer and thus breaking the inhibiting crust, or (3) removing the top surface media and replacing it with clean media. The effectiveness of each technique has not been clearly established in the literature.

6.3.5 Filter Performance

A summary of the performance of selected intermittent sand filters treating household wastwaters appears in Table 6-4, 6-5, and 6-6. These tables illustrate that intermittent filters produce high-quality effluents with respect to BOD_5 and suspended solids. Normally, nitrogen is transformed almost completely to the nitrate form provided the filter remains aerobic. Rates of nitrification may decrease in winter months as temperatures fall. Little or no denitrification should occur in properly operated intermittent filters.

Total and ortho-phosphate concentrations can be reduced up to approximately 50% in clean sand; but the exchange capacity of most of the sand as well as phosphorus removal after maturation is low. Use of calcareous sand or other high-aluminum or iron materials intermixed within the sand may produce significant phosphorus removal. Chowdhry (28) and Brandes, et al. (23), reported phosphorus removals of up to 90% when additions of 4% "red mud" (high in Al_2O_3 and Fe_2O_3) were made to a medium sand. Intermittent filters are capable of reducing total and fecal coliforms by 2 to 4 logs, producing effluent values ranging from 100 to 3,000 per 100 ml and 1,000 to 100,000/100 ml for fecal and total coliforms, respectively (2)(19)(28).

6.3.6 Design Criteria

6.3.6.1 Buried Filters

Table 6-7 summarizes design criteria for subsurface intermittent sand filters.

Hydraulic loading of these filters is normally equal to or less than 1.0 gpd/ft^2 (0.04 m^3/m^2/d) for full-time residences. This value is similar to loading rates for absorption systems in sandy soils after

TABLE 6-4

PERFORMANCE OF BURIED INTERMITTENT FILTERS - SEPTIC TANK EFFLUENT

Filter Characteristics				Effluent Characteristics				
Effective Size	Uniformity Coefficient	Hydraulic Loading	Depth	BOD	SS	NH_3^-N	NO_3^-N	Reference
mm		gpd/ft^2	in.	mg/l	mg/l	mg/l	mg/l	
0.24	3.9	1	30	2.0	4.4	0.3	25	25
0.30	4.1	1	30	4.7	3.9	3.8	23	25
0.60	2.7	1	30	3.8	4.3	3.1	27	25
1.0	2.1	1	30	4.3	4.9	3.7	24	25
2.5	1.2	1	30	8.9	12.9	6.7	18	25
0.17	11.8	0.2	39	1.8	11.0	1.0	32	22
0.23 - 0.36	2.6 - 6.1	1.15	24	4	12	0.7	17	19

TABLE 6-5

PERFORMANCE OF FREE ACCESS INTERMITTENT FILTERS

Source	Filter Characteristics: Effective Size (mm)	Filter Characteristics: Unif. Coeff.	Filter Characteristics: Hydraulic Loading (gpd/ft^2)	Depth (in.)	Dose Freq. (per day)	Effluent Quality: BOD (mg/l)	Effluent Quality: SS (mg/l)	Effluent Quality: NH_3^-N (mg/l)	Effluent Quality: NO_3^-N (mg/l)	Filter Run (months)	Ref.
Septic Tank	0.23 - 0.26	-	4.5	60	-	23[a]	-	8	32	6 - 9[b]	21
Septic Tank	0.41	-	2.3	60	-	11[a]	-	3	46	6 - 9[b]	21
Trick. Filter	0.27	-	11.4	60	-	17[a]	-	2	29	6[b]	21
Trick. Filter	0.41	-	14.0	60	-	18[a]	-	2	33	12[b]	21
Primary	0.25	-	2.75	30	1	6	6	5	19	4.5	23
Primary	0.25	-	4.7	30	2	3	8	2	22	36	23
Primary	1.04	-	-	30	2	28	36	10	13	>54	23
Primary	1.04	-	14	30	24	4	9	3	17	>54	23
Septic Tank	0.45	3.0	5	30	3-6	8	4	3	25	3	2
Extended Aer.	0.19	3.3	3.8	30	3-6	3	9	0.3	34	12	2
Lagoon(Summer)	0.19	9.7	9.1	36	1	2	3	0.5	4.0	1	13
Lagoon(Winter)	0.19	9.7	9.1	36	1	9.4	9.6	4.6	1.0	4	13

[a] Estimated from "oxygen consumed."

[b] Weekly raking 3 inches deep.

TABLE 6-6

PERFORMANCE OF RECIRCULATING INTERMITTENT FILTERS[a]

Filter Characteristics				Recirculation Ratio	Dose	Effluent Quality			Mtnce.	Ref.
Effective Size	Unif. Coeff.	Hydraulic Loading	Depth			BOD	SS	NH_3N		
mm		gpd/ft^2	in.	r/Q		mg/l	mg/l	mg/l		
0.6 - 1.0	2.5	-	36	4:1	5-10 min every 30 min	4	5	-	Weed/Rake as Req'd	24
0.3 - 1.5	3.5	3.0 - 5.0[b]	24	3:1 - 5:1	20 min every 2-3 hr	15.8[c]	10.0[c]	8.4[c]	Rake Weekly	26
1.2	2.0	3.0[b]	36	4:1	5 min every 30 min	4	3	-	Weed as Req'd	27

[a] Septic tank effluent.

[b] Based on forward flow.

[c] Average for 12 installations (household flow to 6,500 gpd plant).

TABLE 6-7

DESIGN CRITERIA FOR BURIED INTERMITTENT FILTERS

Item	Design Criteria
Pretreatment	Minimum level - sedimentation (septic tank or equivalent)
Hydraulic Loading	
All year	<1.0 gpd/ft^2
Seasonal	<2.0 gpd/ft^2
Media	
Material	Washed durable granular material (less than 1 percent organic matter by weight)
Effective size	0.50 to 1.00 mm
Unif. Coeff.	<4.0 (<3.5 preferable)
Depth	24 to 36 inches
Underdrains	
Material	Open joint or perforated pipe
Slope	0.5 to 1.0 percent
Bedding	Washed durable gravel or crushed stone (1/4 to 1-1/2 in.)
Venting	Upstream end
Distribution	
Material	Open joint or perforated pipe
Bedding	Washed durable gravel or stone (3/4 to 2-1/2 in.)
Venting	Downstream end
Dosing	Flood filter; frequency greater than 2 per day

equilibrium conditions are obtained. When filters are designed for facilities with seasonal occupation, hydraulic loading may be increased to 2.0 gpd/ft^2 (0.08 m^3/m^2/d) since sufficient time will be available for drying and restoring the infiltrative surface of the bed.

The effective size of media for subsurface filters ranges from 0.35 to 1.0 mm with a UC less than 4.0, and preferably less than 3.5. Finer media will tend to clog more readily, whereas coarser media may result in poorer distribution and will normally produce a lower effluent quality.

Distribution and underdrains are normally perforated or open-joint pipe with a minimum 4-in. (10-cm) diameter. The distribution and underdrain lines are surrounded by at least 8 in. of washed durable gravel or crushed stone. For distribution lines, the gravel or stone is usually smaller than 2-1/2 in. (6 cm) but larger than 3/4 in. (2 cm), whereas the size range of the gravel or stone for the underdrains is between 1-1/2 to 1/4 in. (3.8 to 0.6 cm). Slopes of underdrain pipe range from 0.5 to 1%. With dosing, there would be no requirement for slopes on distribution piping.

Proper dosing to the filter is critical to its successful performance. The dosing system is designed to flood the entire filter during the dosing cycle. A dosing frequency of greater than two times per day is recommended. Details on design and construction of dosing chamber facilities appear in Chapter 8.

6.3.6.2 Free Access Filters (Non-Recirculating)

Design criteria for free access filters are presented in Table 6-8.

Hydraulic loading to these filters depends upon media size and wastewater characteristics. Septic tank effluent may be applied at rates up to 5 gpd/ft^2 (0.2 m^3/m^2/d), whereas a higher quality pretreated wastewater may be applied at rates as high as 10 gal/d ft^2 (40 cm/d). Selection of hydraulic loading will also be influenced by desired filter run times (see Section 6.3.8). Higher acceptable loadings on these filters as compared to subsurface filters relates primarily to the accessibility of the filter surface for maintenance.

Media characteristics and underdrain systems for free access filters are similar to those for subsurface filters. Distribution is often provided through pipelines and directed on splash plates located at the center or corners of the sand surface. Occasionally, troughs or spray nozzles are

TABLE 6-8

DESIGN CRITERIA FOR FREE ACCESS INTERMITTENT FILTERS

Item	Design Criteria
Pretreatment	Minimum level - sedimentation (septic tank or equivalent)
Hydraulic Loading	
Septic tank feed	2.0 to 5.0 gpd/ft^2
Aerobic feed	5.0 to 10.0 gpd/ft^2
Media	
Material	Washed durable granular material (less than 1 percent organic matter by weight)
Effective size	0.35 to 1.00 mm
Unif. Coeff.	<4.0 (<3.5 preferable)
Depth	24 to 36 inches
Underdrains	
Material	Open joint or perforated pipe
Slope	0.5 to 1.0 percent
Bedding	Washed durable gravel or crushed stone (1/4 to 1-1/2 in.)
Venting	Upstream end
Distribution	Troughs on surface; splash plates at center or corners; sprinkler distribution
Dosing	Flood filter to 2 inches; frequency greater than 2 per day
Number	
Septic tank feed	Dual filters, each sized for design flow
Aerobic feed	Single filter

employed as well, and ridge and furrow application has been successful during winter operation in severe climatic conditions. Dosing of the filter should provide for flooding the bed to a depth of approximately 2 in. Dosing frequency is usually greater than two times per day. For coarser media (greater than 0.5 mm), a dosing frequency greater than 4 times per day is desirable. Design criteria for dosing chambers, pumps, and siphons are found in Chapter 8.

The properties of the wastewater applied affect the clogging characteristics of the filter and, therefore, the methods of filter maintenance. Dual filters, each designed to carry the design flow rate, may be desirable when treating septic tank effluent to allow sufficient resting after clogging (see Section 6.3.8).

6.3.6.3 Recirculating Filters

Proposed design criteria for recirculating intermittent sand filters are presented in Table 6-9 (24)(26). These free access filters employ a recirculation (dosing) tank between the pretreatment unit and filter with provision for return of filtered effluent to the recirculation tank.

Hydraulic loading ranges from 3 to 5 gpd/ft^2 (0.12 to 0.20 m^3/m^2/d) depending on media size. Media size range is from 0.3 to 1.5 mm, the coarser sizes being recommended (23)(26). Underdrain and distribution arrangements are similar to those for free access filters. Recirculation is critical to effective operation, and a 3:1 to 5:1 recirculation ratio (Recycle: Forward Flow) is preferable. Pumps should be set by timer to dose approximately 5 to 10 min per 30 min. Longer dosing cycles may be desirable for larger installations - 20 min every 2 to 3 hr. Dosing should be at a rate high enough to insure flooding of the surface to greater than 2 in. (5 cm). Recirculation chambers are normally sized at 1/4 to 1/2 the volume of the septic tank.

6.3.7 Construction Features

6.3.7.1 Buried Filters

A typical plan and profile of a buried intermittent sand filter are depicted in Figure 6-5. The filter is placed within the ground with a natural topsoil cover in excess of 10 in. (25 cm) over the crown of the distribution pipes. The filter must be carefully constructed after excavation and the granular fill settled by flooding. Distribution and underdrain lines should be constructed of an acceptable material with a minimum diameter of 4 in. (10 cm). The tile is normally laid with open

TABLE 6-9

DESIGN CRITERIA FOR RECIRCULATING INTERMITTENT FILTERS

Item	Design Criteria
Pretreatment	Minimum level - sedimentation (septic tank or equivalent)
Hydraulic Loading	3.0 to 5.0 gpd/ft^2 (forward flow)
Media	
Material	Washed durable granular material (less than 1 percent organic matter by weight)
Effective size	0.3 to 1.5 mm
Unif. Coeff.	<4.0 (<3.5 preferable)
Depth	24 to 36 inches
Underdrains	
Material	Open joint or perforated pipe
Slope	0.5 to 1.0 percent
Bedding	Washed durable gravel or crushed stone (1/4 to 1-1/2 in.)
Venting	Upstream end
Distribution	Troughs on surface; splash plates at center or corners; sprinkler distribution
Recirculation Ratio	3:1 to 5:1 (5:1 preferable).
Dosing	Flood filter to approx. 2 inches; pump 5 to 10 min per 30 min; empty recirculation tank in less than 20 min
Recirculation Tank	Volume equivalent to at least one day's raw wastewater flow

FIGURE 6-5

TYPICAL BURIED INTERMITTENT FILTER INSTALLATION

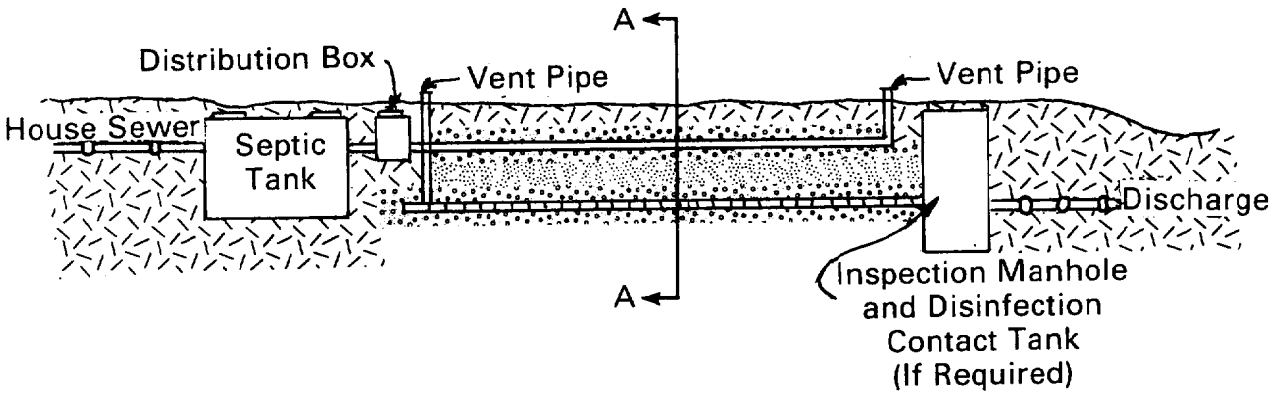

Profile

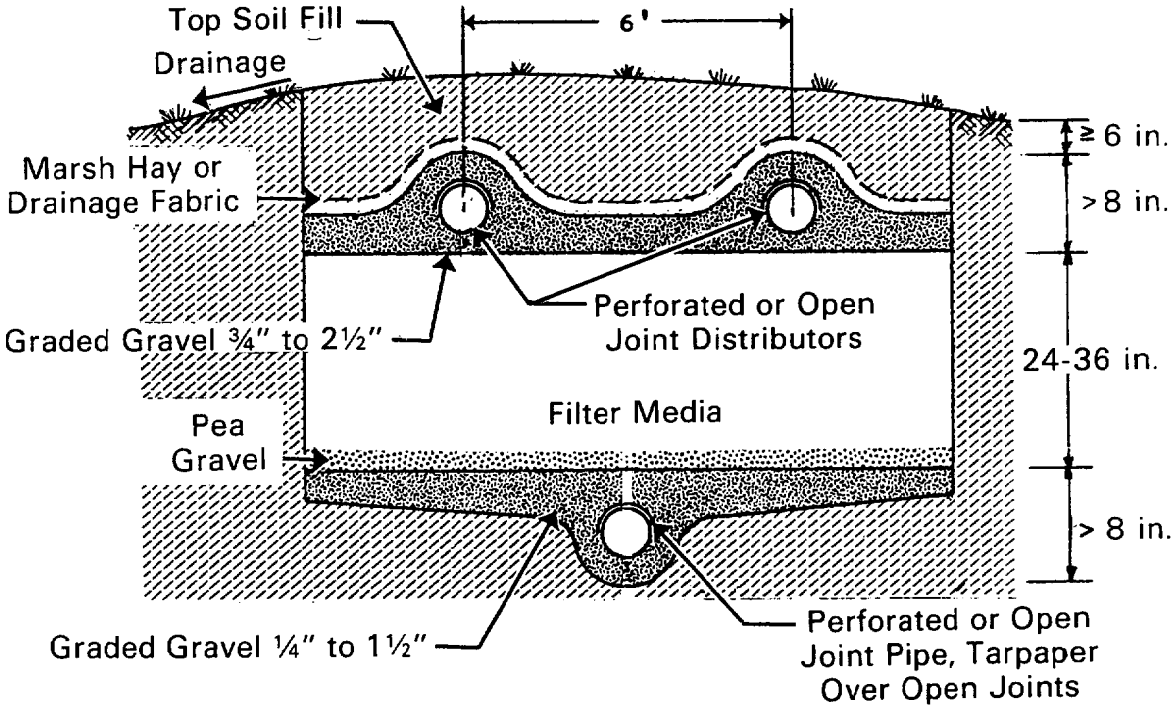

Section A-A

joints with sections spaced not less than 1/4 in. (0.6 cm) or greater than 1/2 in. (1.3 cm) apart. If continuous pipeline is used, conventional perforated pipe will provide adequate distribution and collection of wastewater within the filter.

The underdrain lines are laid to grade (0.5 to 1%) and one line is provided for each 12 ft (3.6 m) of trench width. Underdrains are provided with a vent pipe at the upstream end extending to the ground surface. The bedding material for underdrain lines is usually a minimum of 10 in. (25 cm) washed graded gravel or stone with sizes ranging from 1/4 to 1-1/2 in. (0.6 to 3.8 cm). The gravel or stone may be overlain with a minimum of 3 in. (8 cm) of washed pea gravel (1/4- to 3/8-in. [0.6 to 1.0 cm] stone) interfacing with the filter media.

The distribution lines should be level and are normally spaced at 3-ft (0.9 m) centers. Distribution lines should be vented at the downstream end with vertical risers to the ground surface. Approximately 10 in. (25 cm) of graded gravel (3/4- to 2-1/2-in. [1.9- to 6.3-cm] size) is usually employed for bedding of distribution lines. Marsh hay, washed pea gravel, or drainage fabric should be placed between the bedding material and the natural topsoil.

The finished grade over the filter should be mounded so as to provide drainage of rainfall away from the filter bed. A grade of approximately 3 to 5%, depending upon topsoil characteristics, would be sufficient.

Any washed, durable granular material that is low in organic matter may be used for filter medium. Mixtures of sand, slag, coal, or other materials have been used to enhance the removal of selected pollutants and to extend filter life. Care must be taken, however, to insure that the media does not stratify with fine layers over coarse.

Design and construction of the dosing chamber and pump or siphon employed for proper application of wastewater to the filter are described in Chapter 8 of this manual.

6.3.7.2 Free Access Filters

The plan and profile of a typical free access filter appear in Figure 6-6. These filters are often built within the natural soil, but may also be constructed completely above the ground surface. They are usually surrounded by sidewalls, often of masonry construction, to prevent earth from washing into the filter media and to confine the flow of wastewater. Where severe climates are encountered, filter walls should

FIGURE 6-6

TYPICAL FREE ACCESS INTERMITTENT FILTER

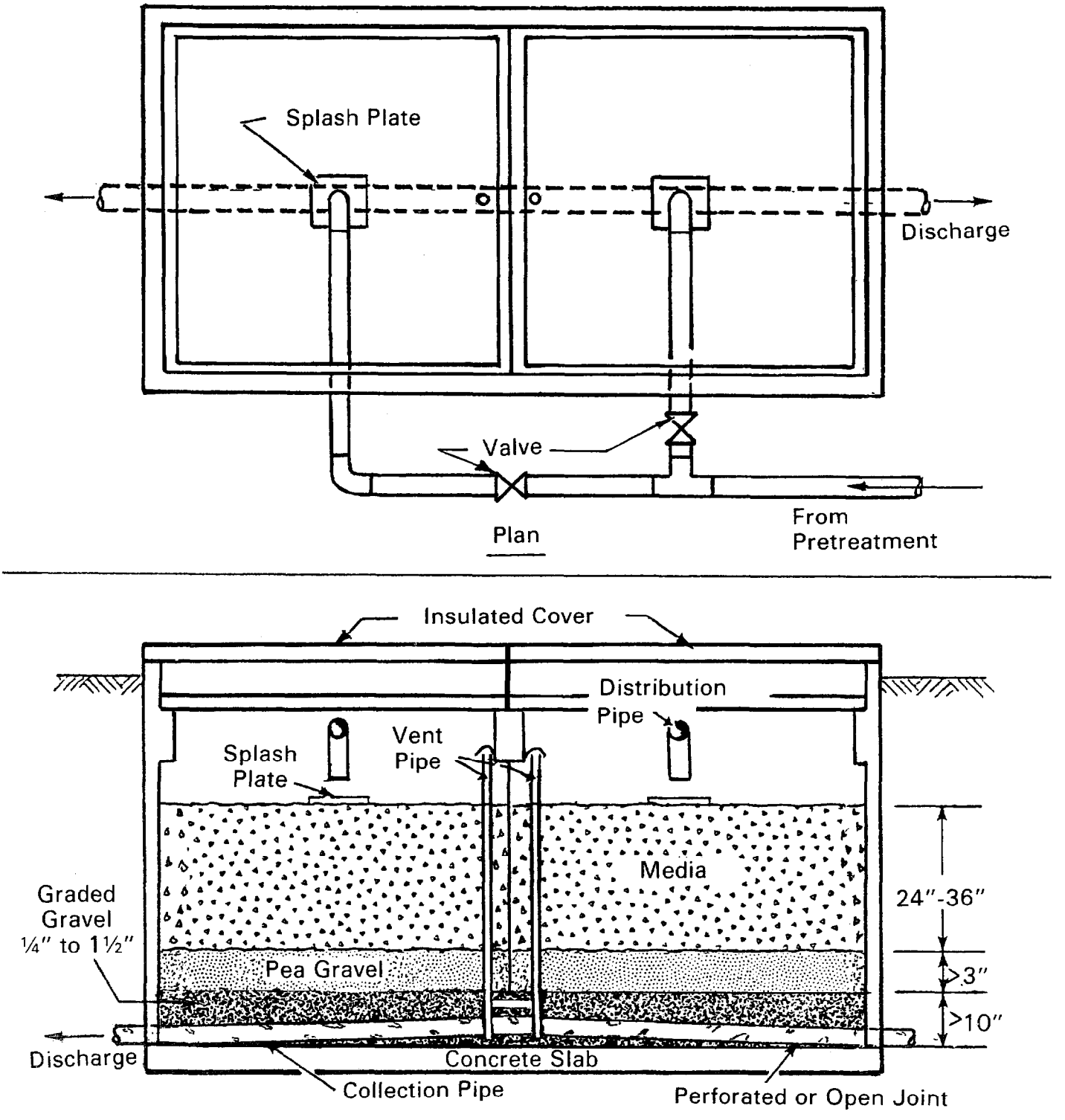

be insulated if exposed directly to the air. The floor of the filter is often constructed of poured concrete or other masonry, but may consist of the natural compacted soil. It is usually sloped to a slight grade so that effluent can be collected into open joint or perforated underdrains.

Free access filters may be covered to protect against severe weather conditions, and to avoid encroachment of weeds or animals. The cover also serves to reduce odor conditions. Covers may be constructed of treated wooden planks, galvanized metal, or other suitable material. Screens or hardware cloth mounted on wooden frames may also serve to protect filter surfaces. Where weather conditions dictate, covers should be insulated. A space of 12 to 24 in. (30 to 61 cm) should be allowed between the insulated cover and sand surface.

The underdrain lines should be constructed of an acceptable material with a minimum diameter of 4 in. (10 cm). The tile is normally laid so that joints are spaced not less than 1/4 in. (0.6 cm) or greater than 1/2 in. (1.3 cm) apart. Conventional perforated pipe may also be employed for distribution and collection. The underdrain lines may be laid directly on the filter floor, which should be slightly pitched to carry filtered effluent to the drain line. In shallow filters, the drain line may be laid within a shallow trench within the filter floor. Drain lines are normally spaced at 12-ft (3.6-m) centers and sloped at approximately 0.5 to 1% grade to discharge. The upstream end of each drain line should be vented with a vertical vent pipe above the filter surface, but within the covered space.

The bedding material for underdrain lines should be a minimum of 10 in. (25 cm) of washed graded gravel or stone with sizes ranging from 1/4 to 1-1/2 in. (0.6 to 3.8 cm). The gravel or stone may be overlain with a minimum of 3 in. (8 cm) of washed pea gravel interfacing with the filter media.

Distribution to the filter may be by means of troughs laid on the surface, pipelines discharging to splash plates located at the center or corners of the filter, or spray distributors. Care must be taken to insure that lines discharging directly to the filter surface do not erode the sand surface. The use of curbs around the splash plates or large stones placed around the periphery of the plates will reduce scour. A layer of washed pea gravel placed over the filter media may also be employed to avoid surface erosion. This practice will create maintenance difficulties; however, when it is time to rake or remove a portion of the media surface.

Filter media employed in free access filters may be any washed, durable granular material free of organic matter. As indicated previously for buried filters, mixtures of sand, slag, coal, or other materials may be employed, but with caution.

The design and construction features of the dosing chamber and pumps, or siphon systems for these filters, are described in Chapter 8.

6.3.7.3 Recirculating Filters

A profile of a typical recirculating intermittent sand filter is presented in Figure 6-7. Recirculating filters are normally constructed with free access to the filter surface. The elements of filter construction are identical to those for the free access filter (Section 6.3.6.3 above). A schematic of a recirculation tank is presented in Figure 6-8.

The basic difference between the recirculating filter and the free access filter is the recirculation chamber (dosing chamber) which incorporates a pump to recycle filter effluent. The recirculation tank receives the overflow from a septic tank, as well as a portion of sand filter effluent. A pump, controlled by a time clock mechanism, pumps the wastewater mixture to the filter surface. The recirculation tank is of equivalent strength and material to the septic tank. It is normally 1/4 to 1/2 the size of the septic tank (or a volume equivalent to at least one day's volume of raw wastewater flow). The tank must be accessible for maintenance of pumps, timers, and control valves. Covers should be provided and insulated as required by climatic conditions.

Recirculation ratios may be controlled by a variety of methods. These include splitter boxes, moveable gates, check valves, and a unique "float valve" arrangement (Figure 6-9). The "float valve" incorporates a simple tee and a rubber ball suspended in a wire basket. The ball will float up and close off the inverted tee when the water level rises. Recirculation ratios are normally established between 3:1 to 5:1 (26).

Recirculation pumps are normally submersible pumps rated for 1/3 horsepower. They should be sized to empty the recirculation tank in less than 20 min. The recirculation pump should be controlled by a time clock to operate between 5 to 10 min every 30 min (26), and should be equipped with a float shut-off and high water override. Details on pump and control specifications may be found in Chapter 8.

FIGURE 6-7

TYPICAL RECIRCULATING INTERMITTENT FILTER SYSTEM

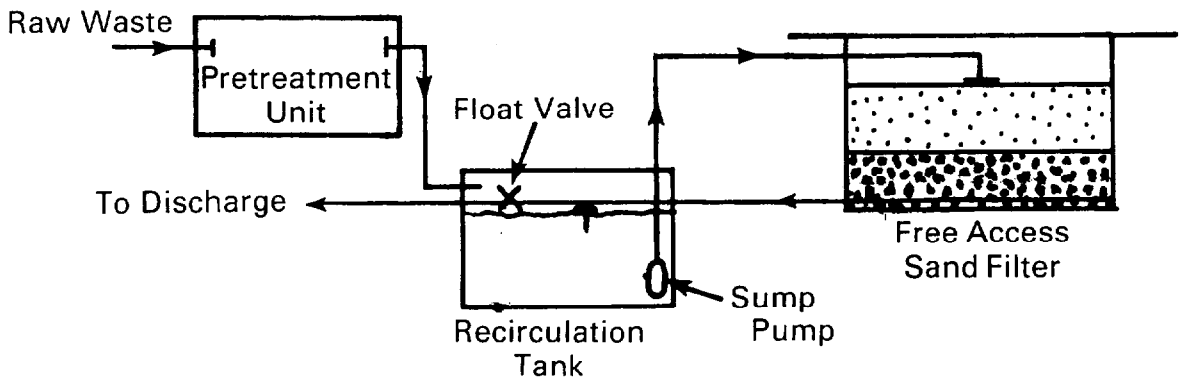

FIGURE 6-8

RECIRCULATION TANK

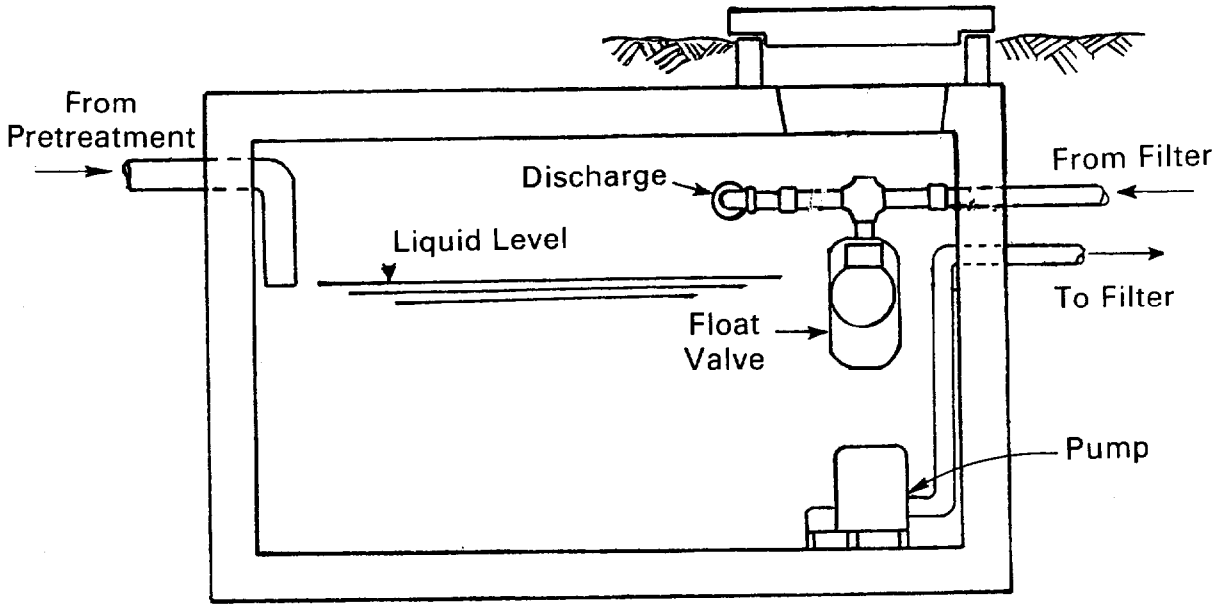

FIGURE 6-9

BY-PASS ALTERNATIVES FOR RECIRCULATING FILTERS

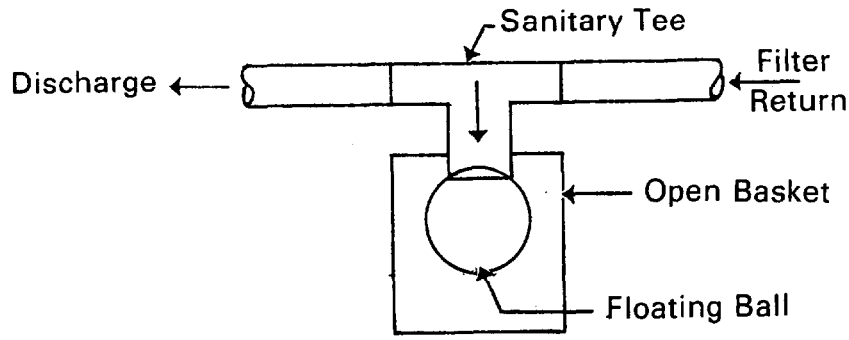

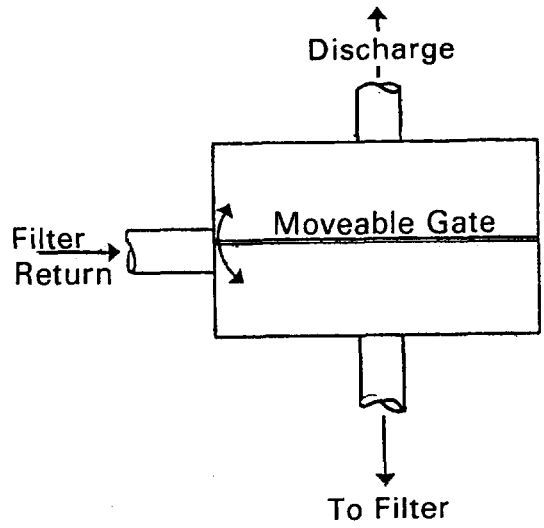

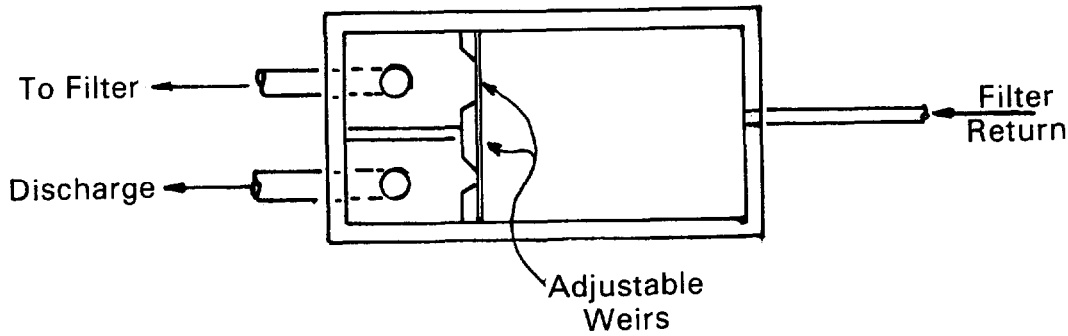

6.3.8 Operation and Maintenance

6.3.8.1 General

Intermittent sand filters require relatively little operational control or maintenance. Once wastewater is applied to the filter, it takes from a few days to two weeks before the sand has matured (2)(28). BOD and SS concentrations in the effluent will normally drop rapidly after maturation. Depending upon media size, rate of application, and ambient temperature, nitrification may take from 2 weeks up to 6 months to develop. Winter start-up should be avoided since the biological growth on the filter media may not properly develop (14).

As discussed above, clogging of the filter eventually occurs as the pore space between the media grains begins to fill with inert and biological materials. Once hydraulic conductivity falls below the average hydraulic loading, permanent ponding occurs. Although effluent quality may not initially suffer, anaerobic conditions within the filter result in further rapid clogging and a cessation of nitrification. Application of wastewater to the filter should be discontinued when continuous ponding occurs at levels in excess of 12 in. (30 cm) above the sand surface. A high water alarm located 12 in. (30 cm) above the sand surface serves to notify the owner of a ponded condition.

Since buried filters cannot be easily serviced, the media size is normally large and hydraulic application rates are low (usually less than 2 in./d [5 cm/d]). Proper pretreatment maintenance is of paramount importance. Free access filters, on the other hand, may be designed with finer media and at higher application rates. Experience indicates that intermittent sand filters receiving septic tank influent will clog in approximately 30 and 150 days for effective sizes of 0.2 mm and 0.6 mm, respectively (2). Aerobically treated effluent can be applied at the same rates for up to 12 months if suspended solids are under 50 mg/l (2)(23). Results with recirculated filters using coarse media (1.0 - 1.5 mm) indicate filter runs in excess of one year (27).

6.3.8.2 Maintenance of Media

Maintenance of the media includes both routine maintenance procedures and media regeneration upon clogging. These procedures apply to free access filters only. The effectiveness of routine raking of the media surface has not been clearly established, although employed in several studies (2)(14)(21)(24). Filters open to the air require weed removal as well. Cold weather maintenance of media may require different methods of wastewater application, including ridge and furrow and continuous

flooding. These methods are designed to eliminate ice sheet development. Use of insulated covers permits trouble-free winter operation in areas with ambient temperatures as low as -40° F (2).

Eventually, filter clogging requires media regeneration. Raking of the surface will not in itself eliminate the need for more extensive rehabilitation (2)(14). The removal of the top layer of sand, as well as replacement with clean sand when sand depths are depleted to less than 24 to 30 in. (61 to 76 cm), appears to be very effective for filters clogged primarily by a surface mat. This includes filters receiving aerobically treated effluent (2). In-depth clogging, however, often prevails in many intermittent filters requiring oxidation of the clogging materials. Resting of the media for a period of time has proven to be very effective in restoring filter hydraulic conductivity (2). Hydrogen peroxide treatment may also prove to be effective, although insufficient data are available on long-term application of this oxidizing agent.

6.3.8.3 Other Maintenance Requirements

The successful operation of filters is dependent on proper maintenance of the pretreatment processes. The accumulation of scum, grease, and solid materials on the filter surface due to inadequate pretreatment results in premature filter failure. This is especially critical for buried filters. Grease traps, septic tanks, and other pretreatment processes should be routinely maintained in accordance with requirements listed in other sections of this manual.

Dosing chambers, pumps, and siphons should receive periodic maintenance checks as recommended in Chapter 8. If electronic sensing devices are employed to warn owners of filter ponding, these devices should also be periodically checked as well.

6.3.8.4 Summary

The maintenance and operational requirements for buried, free access and recirculating filters are summarized in Tables 6-10, 6-11, and 6-12. Routine maintenance requirements have not been well documented for intermittent filtration onsite, but visits should be made four times per year to check filters and their appurtenances. Based on a meager data base, unskilled manpower requirements for buried filter systems would be less than 2 man days per year for examination of dosing chamber and appurtenances and septic tank. Free access filters may require from 2 to 4 man days per year for media maintenance and replacement and examination of dosing chamber, septic tank, and appurtenances. Additional

TABLE 6-10

OPERATION AND MAINTENANCE REQUIREMENTS
FOR BURIED INTERMITTENT FILTERS

Item	O/M Requirement
Pretreatment	Depends upon process
Dosing Chamber	
Pumps and controls	Check every 3 months
Timer sequence	Check and adjust every 3 months
Appurtenances	Check every 3 months
Filter Media	None

TABLE 6-11

OPERATION AND MAINTENANCE REQUIREMENTS
FOR FREE ACCESS INTERMITTENT FILTERS

Item	O/M Requirement
Pretreatment	Depends upon process
Dosing Chamber	
Pumps and controls	Check every 3 months
Timer sequence	Check and adjust every 3 months
Appurtenances	Check every 3 months
Filter Media	
Raking	Every 3 months, 3 in. deep
Replacement	
Septic tank feed	Replace when ponded more than 12 in. deep; replace top 2 to 3 in. sand; rest while alternate unit in operation (60 days)
Aerobic feed	Replace when ponded more than 12 in. deep; replace top 2 to 3 in. sand; return to service
Other	Weed as required Maintain distribution device as required Protect against ice sheeting Check high water alarm

time would be required by analytical technicians for effluent quality analysis as required. Power requirements would be variable, depending upon the dosing method employed, but should be less than 0.1 kWh/day. The volume of waste media from intermittent filters may amount to approximately 0.25 ft^3/ft^2 (0.08 m^3/m^2) of surface area each time media must be removed.

TABLE 6-12

OPERATION AND MAINTENANCE REQUIREMENTS
FOR RECIRCULATING INTERMITTENT FILTERS

Item	O/M Requirement
Pretreatment	Depends upon process
Dosing Chamber	
Pumps and controls	Check every 3 months
Timer sequence	Check and adjust every 3 months
Appurtenances	Check every 3 months
Filter Media	
Raking	Every 3 months, 3 in. deep
Replacement	Skim sand when heavy incrustations occur; add new sand when sand depth falls below 24 in.
Other	Weed as required Maintain distribution device as required Protect against ice sheeting

6.3.9 Considerations for Multi-Home and Commercial Wastewaters

6.3.9.1 Applicability

Intermittent filtration processes have been successfully employed in larger scale installations to achieve high levels of treatment of wastewater.

6.3.9.2 Design Criteria

Intermittent filters for larger installations may be designed in accordance with similar criteria used for onsite systems (20). Submerged filters should be avoided. The biggest difficulty with larger flow units is adequate wastewater distribution. Troughs, ridge and furrow spray distributors, and multiple pipe apron systems may be used. Siphons or pumps should be employed to achieve from 2 to 4 doses per day. Filter flooding to approximately 2 in. (5 cm) should be achieved per dose.

Multiple beds are desirable instead of one large filter unit. Allowance should be made for 60-day resting periods for filters receiving septic tank effluent.

6.3.9.3 Construction Features

Construction features for large intermittent sand filters are similar to those of smaller units. Distribution and collection systems are normally more elaborate. Covering is desirable in very cold climates.

6.3.9.4 Operation and Maintenance

Day-to-day operation and maintenance of larger filter systems are minimal. Sand surfaces should be raked and leveled on a weekly basis. Distribution troughs should be kept level; pumps or siphons and controls must be periodically maintained. Unskilled manpower requirements of 10 to 15 man-hours per week may be expected for larger installations. Power requirements depend on dosing systems employed.

6.4 Aerobic Treatment Units

6.4.1 Introduction

Biological wastewater treatment processes are employed to transform dissolved and colloidal pollutants into gases, cell material, and metabolic end products. These processes may occur in the presence or absence of oxygen. In the absence of oxygen (anaerobic process), wastewater materials may be hydrolyzed and the resultant products fermented to produce a variety of alcohols, organic acids, other reduced end products, synthesized cell mass, and gases including carbon dioxide, hydrogen, and methane. Further treatment of the effluents from anaerobic processes is

normally required in order to achieve an acceptable quality for surface discharge. On the other hand, aerobic processes will generate high-quality effluents containing a variety of oxidized end products, carbon dioxide, and metabolized biomass. Figure 6-10 summarizes the basic differences in these processes.

Biological wastewater treatment is normally carried out in an open culture whereby a great variety of microorganisms exist symbiotically. The system is, therefore, very versatile in carrying out a variety of biochemical reactions in response to variations in input pollutants as well as other environmental factors.

An important feature of biological processes is the synthesis and subsequent separation of microbial cells from the treated liquid. In conventional aerobic processes, new biological growth may be expected to range from 30 to 60% of the dry weight of organic matter added to the system. As the residence time of microbial cells in the system increases, the net cell synthesis decreases, but never reaches zero due to the presence of a certain amount of inert material in the influent wastewater as well as nondegradable solids synthesized by the microbes. It is necessary, therefore, to waste these solids as they build up within the system. Yet, it is equally as important to maintain within the system an active population of microbes to carry out the desired biochemical reactions.

Aerobic biological treatment processes can be employed onsite to remove substantial amounts of BOD and suspended solids that are not removed by simple sedimentation. A secondary feature of the process is nitrification of ammonia in the waste (under appropriate conditions) and the significant reduction of pathogenic organisms.

Despite their advantageous treatment capabilities, aerobic units for onsite treatment are susceptible to upsets. Without regular supervision and maintenance, the aerobic unit may produce low-quality effluents. To avoid the problems associated with operation and maintenance, some manufacturers have incorporated various features into the design of these package units in order to reduce the need for frequent surveillance.

At least two process schemes are commercially available today for onsite application. These are: (1) suspended growth and (2) fixed growth. Each system has its own unique operational characteristics and design features, but all provide oxygen transfer to the wastewater, intimate contact between the microbes and the waste, and solids separation and removal.

FIGURE 6-10

AEROBIC AND ANAEROBIC DECOMPOSITION PRODUCTS

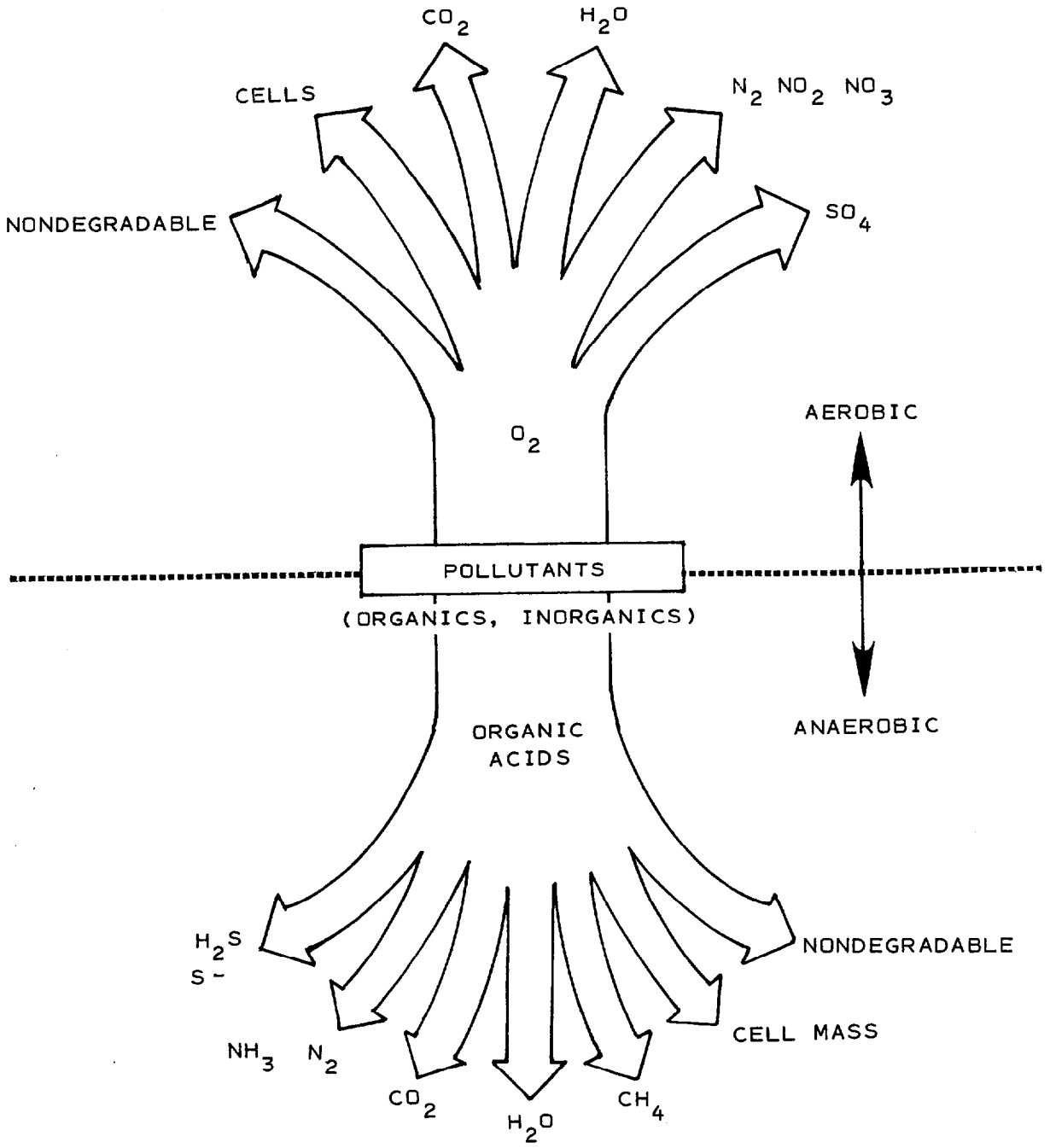

Anaerobic biological treatment processes may also be employed for onsite wastewater treatment. Septic tanks provide anaerobic treatment as discussed more fully in Section 6.2. Septic tank designs, however, do not normally incorporate considerations to optimize anaerobic decomposition. Anoxic denitrification of nitrified wastewaters may also be practiced onsite. Details of this process are described in Section 6.6. Anaerobic packed beds have been proposed for onsite treatment of wastewaters (29), but there has been no long-term field experience with these processes.

6.4.2 Suspended Growth Systems - Extended Aeration

6.4.2.1 Description

Extended aeration is a modification of the activated sludge process whereby a high concentration of microorganisms are maintained in an aeration tank, followed by separation and recycle of all or a portion of the biomass back to the aeration tank. There are a variety of proprietary extended aeration package plants available on the market today for onsite application. Figure 6-11 depicts two typical package extended aeration systems. The process may be operated in a batch or continuous flow mode, and oxygen is supplied by either diffused or mechanical aeration. Positive biomass return to the aeration tank is normally employed, but wasting of excess solids varies widely between manufactured units.

6.4.2.2 Applicability

Extended aeration processes are necessarily more complex than septic tanks, and require regular operation and maintenance. The plants may be buried or housed onsite, but must be readily accessible. The aeration system requires power, and some noise and odor may be associated with it. There are no significant physical site conditions that limit its application, although local codes may require certain set-back distances. The process is temperature-dependent, and should be insulated and covered as climate dictates.

6.4.2.3 Factors Affecting Performance

In extended aeration package plants, long hydraulic and solids retention times (SRT) are maintained to ensure a high degree of treatment at minimum operational control, to hedge against hydraulic or organic overload to the system, and to reduce net sludge production (20). Since wasting of accumulated solids is often not routinely practiced in many of these

FIGURE 6-11

EXAMPLES OF EXTENDED AERATION PACKAGE PLANT CONFIGURATIONS

Batch - Extended Aeration

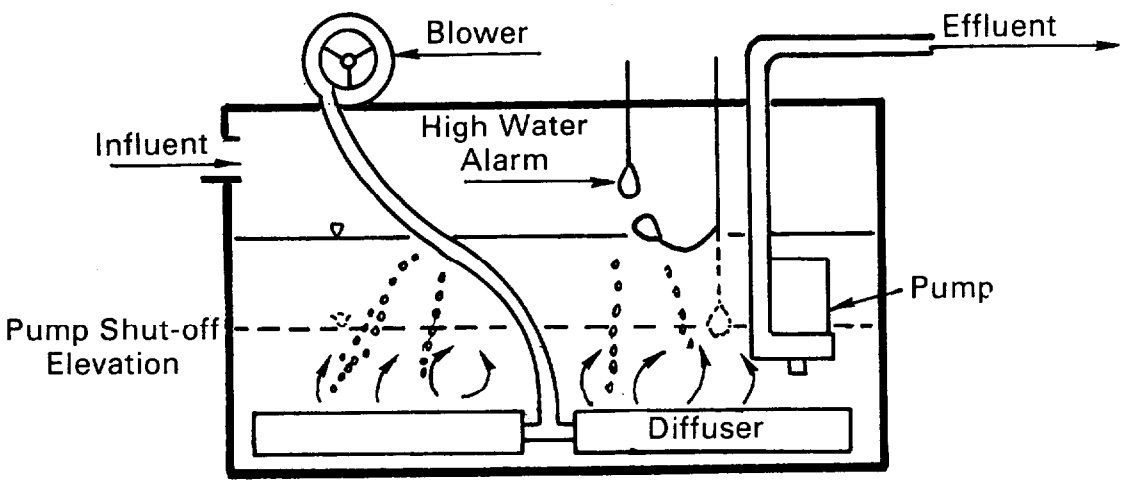

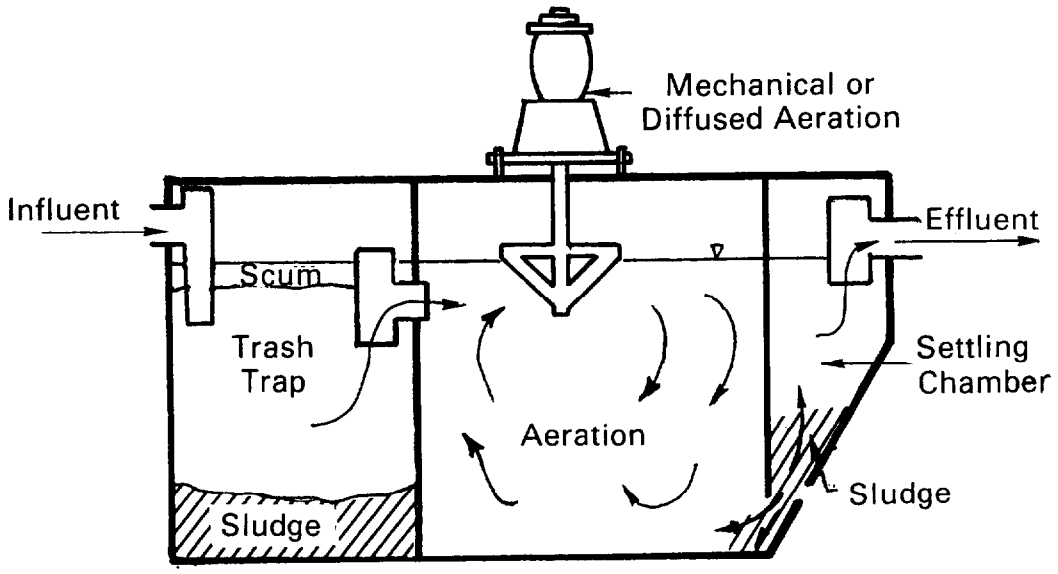

Flow-Through Extended Aeration

units, SRT increases to a point where the clarifier can no longer handle the solids, which will be uncontrollably wasted in the effluent. Treatment performance (including nitrification) normally improves with increasing hydraulic retention time and SRT to a point where excessive solids build-up will result in high suspended solids washout. This is one of the biggest operational problems with extended aeration units, and is often the reason for reports of poor performance.

Dissolved oxygen concentrations in the aeration tank should exceed 2 mg/l in order to insure a high degree of treatment and a good settling sludge. Normally, onsite extended aeration plants supply an excess of dissolved oxygen due to minimum size restrictions on blower motors or mechanical drives. An important element of most aeration systems is the mixing provided by the aeration process. Most package units provide sufficient mixing to ensure good suspension of solids and mass transfer of nutrients and oxygen to the microbes.

Wastewater characteristics may also influence performance of the process. Excess amounts of certain cleaning agents, greases, floating matter, and other detritus can cause process upsets and equipment malfunctions. Process efficiency may be affected by temperature, generally improving with increasing temperature.

The clarifier is an important part of the process. If the biomass cannot be properly separated from the treated effluent, the process has failed. Clarifier performance depends upon the settleability of the biomass, the hydraulic overflow rate, and the solids loading rate. Hydraulic surges can result in serious clarifier malfunctions. As mentioned previously, high solids loadings caused by accumulation of mixed liquor solids result in eventual solids carryover. Excessively long retention times for settled sludges in the clarifier may result in gasification and flotation of these sludges. Scum and floatable material not properly removed from the clarifier surface will greatly impair effluent quality as well.

The field performance of onsite extended aeration package systems is summarized in Table 6-13. Results presented in this summary indicate that performance is variable due to the wide diversity of factors that can adversely affect extended aeration systems. Shock loads, sludge bulking, homeowner abuse or neglect, and mechanical malfunctions are among the most common reasons for poor performance. In general, the uncontrolled loss of solids from the system is the major cause of effluent deterioration.

Generally, extended aeration plants produce a high degree of nitrification since hydraulic and solids retention times are high. Reductions of

TABLE 6-13

SUMMARY OF EFFLUENT DATA FROM VARIOUS AEROBIC UNIT FIELD STUDIES

Parameter	Source						
	Ref. (2)	Ref. (30)	Ref. (31)	Ref. (32)	Ref. (33)	Ref. (34)	Ref. (35)
BOD_5							
Mean, mg/l	37	37	47	92	144	31	36
Range, mg/l	<1-208	1-235	10-280	-	10-824	9-80	3-170
No. of Samples	112	167	86	146	393	10	124
Suspended Solids							
Mean, mg/l	39	62	94	94	122	49	57
Range, mg/l	3-252	1-510	18-692	-	17-768	5-164	4-366
No. of Samples	117	167	74	146	251	10	132

TABLE 6-15

SUGGESTED MAINTENANCE FOR ONSITE
EXTENDED AERATION PACKAGE PLANTS[a]

Item	Suggested Maintenance
Aeration Tank	Check for foaming and uneven air distribution.
Aeration System	
Diffused air	Check air filters, seals, oil level, back pressure; perform manufacturer's required maintenance.
Mechanical	Check for vibration and overheating; check oil level, seals; perform manufacturer's required maintenance.
Clarifier	Check for floating scum; check effluent appearance; clean weirs; hose down sidewalls and appurtenance; check sludge return flow rate and adjust time sequence if required; locate sludge blanket; service mechanical equipment as required by manufacturer.
Trash Trap	Check for accumualted solids; hose down sidewalls.
Controls	Check out functions of all controls and alarms; check electrical control box.
Sludge Wasting	Pump waste solids as required.
Analytical	Measure aeration tank grab sample for DO, MLSS, pH, settleability, temperature; measure final effluent composite sample for BOD, SS, pH (N and P if required).

[a] Maintenance activities should be performed about once per month.

TABLE 6-15

SUGGESTED MAINTENANCE FOR ONSITE
EXTENDED AERATION PACKAGE PLANTS[a]

Item	Suggested Maintenance
Aeration Tank	Check for foaming and uneven air distribution.
Aeration System	
Diffused air	Check air filters, seals, oil level, back pressure; perform manufacturer's required maintenance.
Mechanical	Check for vibration and overheating; check oil level, seals; perform manufacturer's required maintenance.
Clarifier	Check for floating scum; check effluent appearance; clean weirs; hose down sidewalls and appurtenance; check sludge return flow rate and adjust time sequence if required; locate sludge blanket; service mechanical equipment as required by manufacturer.
Trash Trap	Check for accumualted solids; hose down sidewalls.
Controls	Check out functions of all controls and alarms; check electrical control box.
Sludge Wasting	Pump waste solids as required.
Analytical	Measure aeration tank grab sample for DO, MLSS, pH, settleability, temperature; measure final effluent composite sample for BOD, SS, pH (N and P if required).

[a] Maintenance activities should be performed about once per month.

TABLE 6-13

SUMMARY OF EFFLUENT DATA FROM VARIOUS AEROBIC UNIT FIELD STUDIES

Parameter	Source						
	Ref. (2)	Ref. (30)	Ref. (31)	Ref. (32)	Ref. (33)	Ref. (34)	Ref. (35)
BOD_5							
Mean, mg/l	37	37	47	92	144	31	36
Range, mg/l	<1-208	1-235	10-280	-	10-824	9-80	3-170
No. of Samples	112	167	86	146	393	10	124
Suspended Solids							
Mean, mg/l	39	62	94	94	122	49	57
Range, mg/l	3-252	1-510	18-692	-	17-768	5-164	4-366
No. of Samples	117	167	74	146	251	10	132

phosphorus are normally less than 25%. The removal of indicator bacteria in onsite extended aeration processes is highly variable and not well documented. Reported values of fecal coliforms appear to be about 2 orders of magnitude lower in extended aeration effluents than in septic tank effluents (2).

6.4.2.4 Design

A discussion of some of the important features of onsite extended aeration package plants in light of current operational experience is presented below.

a. Configuration

Most extended aeration package plants designed for individual home application range in capacity from 600 to 1,500 gal (2,270 to 5,680 l), which includes the aeration compartment, settling chamber, and in some units, a pretreatment compartment. Based upon average flows from households, this volume will provide total hydraulic retention times of several days.

b. Pretreatment

Some aerobic units provide a pretreatment step to remove gross solids (grease, trash, garbage grindings, etc.). Pretreatment devices include trash traps, septic tanks, comminutors, and aerated surge chambers. The use of a trash trap or septic tank preceding the extended aeration process reduces problems with floating debris in the final clarifier, clogging of flow lines, and plugging of pumps.

c. Flow Mode

Aerobic package plants may be designed as continuous flow or batch flow systems. The simplest continuous flow units provide no flow equalization and depend upon aeration tank volume and/or baffles to reduce the impact of hydraulic surges. Some units employ more sophisticated flow dampening devices, including air lift or float-controlled mechanical pumps to transfer the wastewater from aeration tank to clarifier. Still other units provide multiple-chambered tanks to attenuate flow. The batch (fill and draw) flow system eliminates the problem of hydraulic variation. This unit collects and treats the wastewater over a period of time (usually one day), then discharges the settled effluent by pumping at the end of the cycle.

d. Method of Aeration

Oxygen is transferred to the mixed liquor by means of diffused air, sparged turbine, or surface entrainment devices. When diffused air systems are employed, low head blowers or compressors are used to force the air through the diffusers placed on the bottom of the tank. The sparged turbine employs both a diffused air source and external mixing, usually by means of a submerged flat-bladed turbine. The sparged turbine is more complex than the simple diffused air system. There are a variety of mechanical aeration devices employed in package plants to aerate and mix the wastewater. Air is entrained and circulated within the mixed liquor through violent agitation from mixing or pumping action.

Oxygen transfer efficiencies for these small package plants are normally low (0.2 to 1.0 lb O_2/hp hr) (3.4 to 16.9 kg O_2/MJ) as compared with large-scale systems due primarily to the high power inputs to the smaller units (constrained by minimum motor sizes for these relatively small aeration tanks) (2). Normally, there is sufficient oxygen transferred to produce high oxygen levels. In an attempt to reduce power requirements or to enhance nitrogen removal, some units employ cycled aeration periods. Care must be taken to avoid the development of poor settling biomass when cycled aeration is used.

Mixing of the aeration tank contents is also an important consideration in the design of oxygen transfer devices. Rule of thumb requirements for mixing in aeration tanks range from 0.5 to 1 hp/1,000 ft^3 (13 to 26 kw/1,000 m^3) depending upon reactor geometry. Commercially available package units are reported to deliver mixing inputs ranging from 0.2 to 3 hp/1,000 ft^3 (5 to 79 kw/1,000 m^3) (2). Deposition problems may develop in those units with the lower mixing intensities.

e. Biomass Separation

The clarifier is critical to the successful performance of the extended aeration process. A majority of the commercially available package plants provide simple gravity separation. Weir and baffle designs have not been given much attention in package units. Weir lengths of at least 12 in. (30 cm) are preferred (10,000 gpd/ft at 7 gpm) (127 m^3/d/m at 0.4 l/sec) and sludge deflection baffles should be included as a part of the outlet design. The use of gas deflection barriers is a simple way to keep floating solids away from the weir area.

Upflow clarifier devices have also been employed to improve separation. Hydraulic surges must be avoided in these systems. Filtration devices

have also been employed in some units. While filters may produce high-quality effluent, they are very susceptible to both internal and external clogging. The behavior of clarifiers is dependent upon biomass settling properties, solids loading rate, and hydraulic overflow rates. Design peak hydraulic overflow rates should be less than 800 gpd ft^2 (32 $m^3/d/m^2$); and at average flow design values normally range from 200 to 400 gpd/ft^2 (8 to 16 $m^3/d/m^2$). Solids loading rates are usually less than 30 lb/ft^2/d (145 kg/m^2/d) based upon average flow and less than 50 lb/ft^2/d (242 kg/m^2/d) based upon peak flows.

f. Biomass Return

Once separated from the treated wastewater, the biomass must be returned to the aeration tank or be wasted. Air lift pumps, draft tubes working off the aerator, and gravity return methods are normally used. Batch units and plants that employ filters do not require sludge return. Rapid removal of solids from the clarifier is desirable to avoid denitrification and subsequent floatation of solids. Positive sludge return should be employed in package plants since the use of gravity return systems has generally proved ineffective (2)(20).

Removal of floating solids from clarifiers has normally been ignored in most onsite package plant designs. Since this material results in serious deterioration of the effluent, efforts should be made to provide for positive removal of this residue. Reliance on the owner to remove floating scum is unrealistic.

g. Biomass Wasting

Most onsite package plants do not provide for routine wasting of solids from the unit. Some systems, however, do employ an additional chamber for aerobic digestion of wasted sludge. Wasting is normally a manual operation whereby the operator checks mixed liquor solids and wasted sludge when mixed liquor concentrations exceed a selected value. In general, wasting should be provided once every 8 to 12 months (2)(35).

h. Controls and Alarms

Most aerobic units are supplied with some type of alarm and control system to detect mechanical breakdown and to control the operation of electrical components. They do not normally include devices to detect effluent quality or biomass deterioration. Since the control systems

contain electrical components, they are subject to corrosion. All electrical components should be waterproofed and regularly serviced to ensure their continued operation.

6.4.2.5 Additional Construction Features

Typical onsite extended aeration package plants are constructed of noncorrosive materials, including reinforced plastics and fiberglass, coated steel, and reinforced concrete. The unit may be buried provided that there is easy access to all mechanical parts and electrical control systems, as well as appurtenances requiring maintenance such as weirs, air lift pump lines, etc. Units may also be installed above ground, but should be properly housed to protect against severe climatic conditions. Installation of the units should be in accordance with specifications of the manufacturers.

Appurtenances for the plant should be constructed of corrosion-free materials including polyethylene plastics. Air diffuser support legs are normally constructed from galvanized iron or equivalent. Large-diameter air lift units should be employed to avoid clogging problems. Mechanical units should be properly waterproofed and/or housed from the elements.

Since blowers, pumps, and other prime movers are abused by severe environment, receive little attention, and are often subject to continuous operation, they should be designed for heavy duty use. They should be easily accessible for routine maintenance and tied into an effective alarm system.

6.4.2.6 Operation and Maintenance

a. General Plant Operation

Typical operating parameters for onsite extended aeration systems are presented in Table 6-14. The activated sludge process can be operated by controlling only a few parameters - the aeration tank dissolved oxygen, the return sludge rate, and the sludge wasting rate. For onsite package plants, these control techniques are normally fixed by mechanical limitations so that very little operational control is required. Dissolved oxygen is normally high and cannot be practically controlled except by "on or off" operation. Experimentation with the process may dictate a desirable cycling arrangement employing a simple time clock

TABLE 6-14

TYPICAL OPERATING PARAMETERS FOR ONSITE EXTENDED AERATION SYSTEMS

Parameter[a]	Average	Maximum
MLSS, mg/l	2,000-6,000	8,000
F/M, lb BOD/d/lb MLSS	0.05 - 0.1	-
Solids Retention Time, days	20-100	-
Hydraulic Retention Time, days	2-5	-
Dissolved Oxygen, mg/l	>2.0	-
Mixing, hp/1,000 ft^3	0.5-1.0	-
Clarifier Overflow Rate, gpd/ft^2	200-400	800
Clarifier Solids Loading, lb/d/ft^2	20-30	50
Clarifier Weir Loading, gpd/ft^2	10,000-30,000	30,000
Sludge Wasting, months	8-12	-

[a] Pretreatment: Trash trap or septic tank.
Sludge Return and Scum Removal: Positive.

control that results in power savings and may also achieve some nitrogen removal (Section 6.6).

The return sludge rate is normally fixed by pumping capacity and pipe arrangements. Return sludge pumping rates often range from 50 to 200% of forward flow. They should be high enough to reduce sludge retention times in the clarifier to a minimum (less than 1 hr), yet low enough to discourage pumping of excessive amounts of water with the sludge. Time clock controls may be used to regulate return pumping.

Sludge wasting is manually accomplished in most package plants. Through experience, the operator knows when mixed liquor solids concentrations become excessive, resulting in excessive clarifier loading. Usually 8- to 12-month intervals between wasting is satisfactory, but this varies with plant design and wastewater characteristic. Wasting is normally accomplished by pumping mixed liquor directly from the aeration tank. Wasting of approximately 75% of the aeration tank volume is usually satisfactory. Wasted sludge must be handled properly (see Chapter 9).

b. Start-Up

Prior to actual start-up, a dry checkout should be performed to insure proper installation. Seeding of the plant with bacterial cultures is not required as they will develop within a 6- to 12-week period. Initially, large amounts of white foam may develop, but will subside as mixed liquor solids increase. During start-up, it is advisable to return sludge at a high rate. Intensive surveillance by qualified maintenance personnel is desirable during the first month of start-up.

c. Routine Operation and Maintenance

Table 6-15 itemizes suggested routine maintenance performance for onsite extended aeration package plants. The process is labor-intensive and requires semi-skilled personnel. Based upon field experience with these units, 12 to 48 man-hr per yr plus analytical services are required to insure reasonable performance. Power requirements are variable, but range between 2.5 to 10 kWh/day.

d. Operational Problems

Table 6-16 outlines an abbreviated listing of operational problems and suggested remedies for them. A detailed discussion of these problems

TABLE 6-16

OPERATIONAL PROBLEMS--EXTENDED AERATION PACKAGE PLANTS

Observation	Cause	Remedy
Excessive local turbulence in aeration tank	Diffuser plugging Pipe breakage Excessive aeration	Remove and clean Replace as required Throttle blower
White thick billowy foam on aeration tank	Insufficient MLSS	Avoid wasting solids
Thick scummy dark tan foam on aeration tank	High MLSS	Waste solids
Dark brown/black foam and mixed liquor in aeration tank	Anaerobic conditions Aerator failure	Check aeration system, aeration tank D.O.
Billowing sludge washout in clarifier	Hydraulic or solids overload	Waste sludge; check flow to unit
	Bulking sludge	See reference (37)
Clumps of rising sludge in clarifier	Denitrification	Increase sludge return rate to decrease sludge retention time in clarifier
	Septic conditions in clarifier	Increase return rate
Fine dispersed floc over weir, turbid effluent	Turbulence in aeration tank	Reduce power input
	Sludge age too high	Waste sludge

for larger, centralized systems can be found in the "Manual of Practice - Operation of Wastewater Treatment Plants" (36) and "Process Control Manual for Aerobic Biological Wastewater Treatment Facilities" (37). Major mechanical maintenance problems for onsite treatment units are with blower or mechanical aerator failure, pump and pipe clogging, electrical motor failure, corrosion and/or failure of controls, and electrical malfunctions (35). Careful attention to a maintenance schedule will reduce these problems to a minimum, and will also alleviate operational problems due to the biological process upset. Emphasis should be placed on adequate maintenance checks during the first 2 or 3 months of operation.

6.4.2.7 Considerations for Multi-Home Application

The extended aeration process may be well suited for multiple-home or commercial applications. The same requirements listed for single onsite systems generally apply to the larger scale systems (20)(36)(37)(38). However, larger package plant systems may be more complex and require a greater degree of operator attention.

6.4.3 Fixed Film Systems

6.4.3.1 Description

Fixed film systems employ an inert media to which microorganisms may become attached. The wastewater comes in contact with this fixed film of microorganisms either by pumping the water past the media or by moving the media past the wastewater to be treated. Oxygen may be supplied by natural ventilation or by mechanical or diffused aeration within the wastewater. Fixed film reactors are normally constructed as packed towers or as rotating plates. Figure 6-12 depicts three types of onsite fixed film systems - the trickling filter (gravity flow of wastewater downward), the upflow filter (wastewater pumped upward through the media), and the rotating biological contractor.

The trickling filter has been used to treat wastewater for many years. Modern filters today consist of towers of media constructed from a variety of plastics, stone, or redwood laths into a number of shapes (honeycomb blocks, rings, cylinders, etc.). Wastewater is distributed over the surface of the media and collected at the bottom through an undrain system. Oxygen is normally transferred by natural drafting, although some units employ blowers. Treated effluent is settled prior to being discharged or partially recycled back through the filter.

FIGURE 6-12

EXAMPLES OF FIXED FILM PACKAGE PLANT CONFIGURATIONS

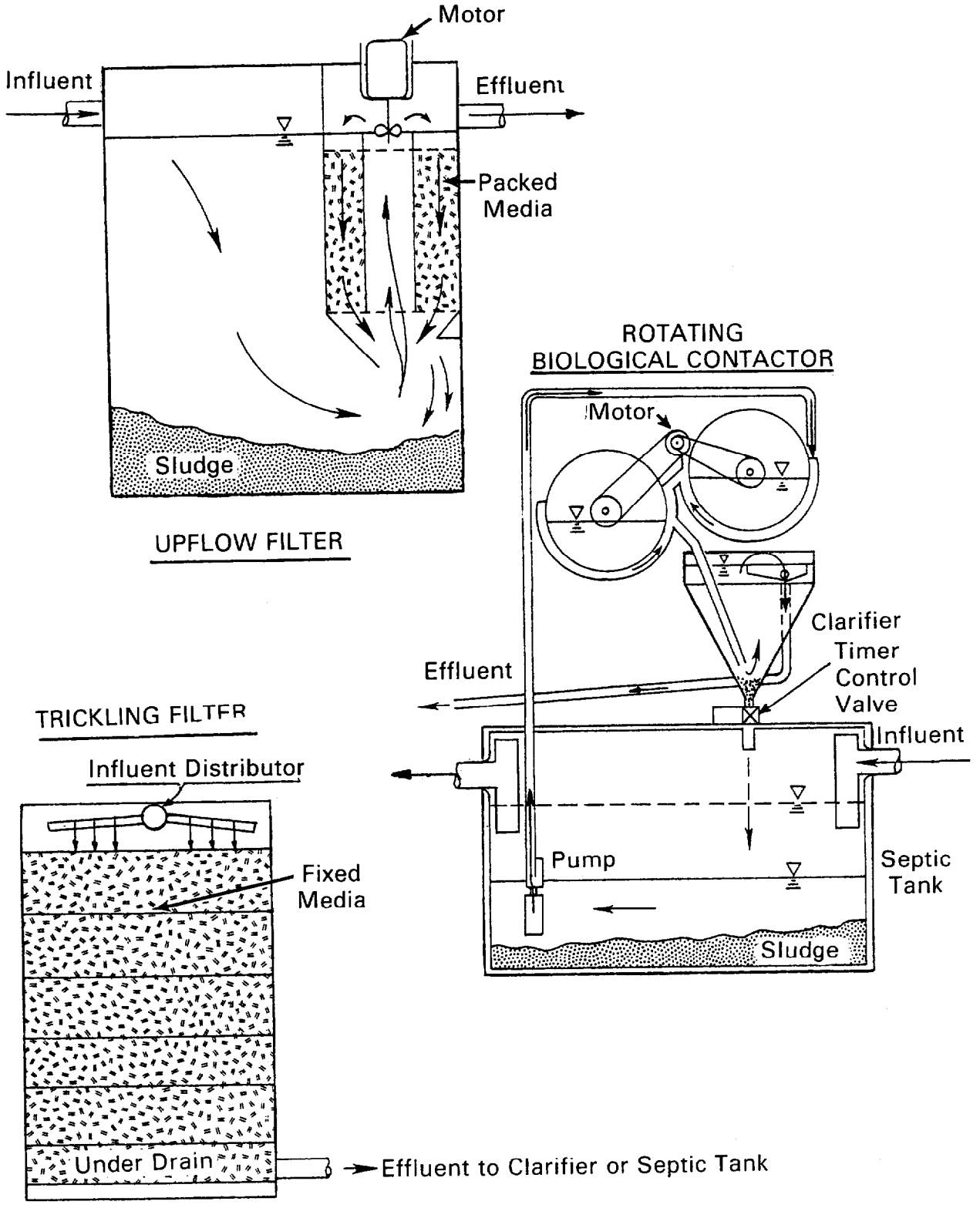

In an upflow filter, wastewater flows through the media and is subsequently collected at an overflow weir. Oxygen may be transferred to the biomass by means of diffusers located at the bottom of the tower or by surface entrainment devices at the top. One of the commercially available units of this type (built primarily for shipboard use) does not require effluent sedimentation prior to discharge (Figure 6-12). Circulation of wastewater through this particular unit promotes the shear of biomass from the media and subsequent carriage to the tank bottom.

The rotating biological contactor (RBC) employs a series of rotating discs mounted on a horizontal shaft. The partially submerged discs rotate at rates of 1 to 2 rpm through the wastewater. Oxygen is transferred to the biomass as the disc rotates from the air to the water phase. Recirculation of effluent is not normally practiced.

6.4.3.2 Applicability

There has been little long-term field experience with onsite fixed film systems. Generally, they are less complex than extended aeration systems and should require less attention; if designed properly they should produce an effluent of equivalent quality.

There are no significant physical site constraints that should limit their application, although local codes may require certain set-back distances. The process is more temperature sensitive than extended aeration and should be insulated as required. Rotating biological contactors should also be protected from sunlight to avoid excessive growth of algae which may overgrow the plate surfaces.

6.4.3.3 Factors Affecting Performance

Limited data are currently available on long-term performance of onsite fixed film systems. Detailed description of process variables that affect fixed film process perfomrance appear in the "Manual of Practice for Wastewater Treatment Plant Design" (20). Low loaded filters should also achieve substantial nitrification, as well as good BOD and SS reductions.

6.4.3.4 Design

Onsite fixed film systems include a variety of proprietary devices. Design guidelines are, therefore, difficult to prescribe. Table 6-17

presents suggested design ranges for two generic fixed film systems, the RBC and the fixed media processes.

TABLE 6-17

TYPICAL OPERATING PARAMETERS FOR ONSITE FIXED FILM SYSTEMS

Parameter[a]	Fixed Media	RBC
Hydraulic Loading, gpd/ft^2	25-100	0.75-1.0
Organic Loading, lb BOD/d/1000 ft^3	5-20	1.0-1.5
Dissolved Oxygen, mg/l	>2.0	>2.0
Overflow Rate, gpd/ft^2	600-800	600-800
Weir Loading, gpd/ft^2	10,000-20,000	10,000-20,000
Sludge Wasting, months	8-12	8-12

[a] Pretreatment: Settling or screening.
Recirculation: Not required.

All fixed film systems should be preceded by settling and/or screening to remove materials that will otherwise cause process malfunction. Hydraulic loadings are normally constrained by biological reaction rates and mass transfer.

Organic loading is primarily dictated by oxygen transfer within the biological film. Excessive organic loads may cause anaerobic conditions resulting in odor and poor performance. Dissolved oxygen in the liquid should be at least 2 mg/l. Recirculation is not normally practiced in package fixed film systems since it adds to the degree of complexity and is energy and maintenance intensive. However, recirculation may be desirable in certain applications where minimum wetting rates are required for optimal performance.

The production of biomass on fixed film systems is similar to that for extended aeration. Very often, accumulated sludge is directed back to the septic tank for storage and partial digestion.

6.4.3.5 Construction Features

Very few commercially produced fixed film systems are currently available for onsite application. Figure 6-12 illustrates several flow arrangements that have been employed. Specific construction details are dependent on system characteristics. In general, synthetic packing or attachment media are preferred over naturally occurring materials because they are lighter, more durable, and provide better void volume - surface area characteristics. All fixed film systems should be covered and insulated as required against severe weather. Units may be installed at or below grade depending upon site topography and other adjacent treatment processes. Access to all moving parts and controls is required, and proper venting of the unit is paramount, especially if natural ventilation is being used to supply oxygen. Underdrains, where required, should be accessible and designed to provide sufficient air space during maximum hydraulic loads. Clarification equipment should include positive sludge and scum handling. All pumps, blowers, and aeration devices, if required, should be rugged, corrosion-resistant, and built for continuous duty.

6.4.3.6 Operation and Maintenance

a. General Process Operation

Fixed film systems for onsite application normally require very minimal operation. Rotating biological contactors are installed at fixed rotational speed and submergence. Flow to these units is normally fixed through the use of an integrated pumping system. Sludge wasting is normally controlled by a timer setting. Through experience, the operator may determine when clarifier sludge should be discharged in order to avoid sludge flotation (denitrification) or excessive build-up.

Where aeration is provided, it is normally designed for continuous duty. On-off cycling of aeration equipment may be practiced for energy conservation if shown not to cause a deterioration of effluent quality.

b. Routine Operation and Maintenance

Table 6-18 itemizes suggested routine maintenance performance for onsite fixed film systems. The process is less labor-intensive than extended aeration systems and requires semi-skilled personnel. Based upon very limited field experience with these units, 8 to 12 man-hr per yr plus

TABLE 6-18

SUGGESTED MAINTENANCE FOR ONSITE FIXED FILM PACKAGE PLANTS[a]

Item	Suggested Maintenance
Media Tank	Check media for debris accumulation, ponding, and excessive biomass - clean as required; check underdrains - clean as required; hose down sidewalls and appurtenances; check effluent distribution and pumping - clean as required.
Aeration System	See Table 6-15
RBC Unit	Lubricate motors and bearings; replace seals as required by manufacturer.
Clarifier	See Table 6-15
Trash Trap	See Table 6-15
Controls	See Table 6-15
Analytical	Measure final effluent composite sample for BOD, SS, pH (N and P if required).

[a] Maintenance activities should be performed about once per month.

analytical services are required to ensure adequate performance. Power requirements depend upon the device employed, but may range from 1 to 4 kWh/day.

c. Operational Problems

Table 6-19 outlines an abbreviated list of potential operational problems and suggested remedies for onsite fixed film systems. A detailed discussion of these may be found in the "Manual of Practice - Operation of Wastewater Treatment Plants" (36) and "Process Control Manual for Aerobic Biological Wastewater Treatment Facilities" (37).

6.4.3.7 Considerations for Multi-Home Applications

Fixed film systems may be well suited for multiple-home or commercial applications. The same requirements for single-home onsite systems apply to the large-scale systems (20)(29)(37)(38). However, larger systems may be more complex and require a greater degree of operator attention.

6.5 Disinfection

6.5.1 Introduction

Disinfection of wastewaters is employed to destroy pathogenic organisms in the wastewater stream. Since disposal of wastewater to surface water may result in potential contacts between individuals and the wastewater, disinfection processes to reduce the risk of infection should be considered.

There are a number of important waterborne pathogens found in the United States (39)(40)(41)(42). Within this group of pathogens, the protozoan cyst is generally most resistant to disinfection processes, followed by the virus and, the vegetative bacteria (43). The design of the disinfection process must necessarily provide effective control of the most resistant pathogen likely to be present in the wastewater treated. Upstream processes may effectively reduce some of these pathogens, but data are scant on the magnitude of this reduction for most pathogens. Currently, the effectiveness of disinfection is measured by the use of indicator bacteria (total or fecal coliform) or disinfectant residual where applicable. Unfortunately, neither method guarantees complete destruction of the pathogen, and conservative values are often selected to hedge against this risk.

TABLE 6-19

OPERATIONAL PROBLEMS--FIXED FILM PACKAGE PLANTS

Observation	Cause	Remedy
Filter Ponding	Media too fine	Replace media
	Organic overload	Flush surface with high pressure stream; increase recycle rate; dose with chlorine (10-20 mg/l for 4 hours)
	Debris	Remove debris; provide pretreatment
Filter Flies	Poor wastewater distribution	Provide complete wetting of media; increase recycle rate; chlorinate (5 mg/l for 6 hours at 1 to 2 week intervals)
Odors	Poor ventilation/ aeration	Check underdrains; maintain aeration equipment, if employed; insure adequate ventilation; increase recycle
Freezing	Improper insultation	Check and provide sufficient insulation
Excessive Biomass Accumulation	Organic overload	Increase recycle; flush surface with high pressure stream; dose with chlorine; increase surface area (RBC)
	Low pH; anaerobic conditions	Check venting; preaerate wastewater
Poor Clarification	Denitrification in clarifier	Remove sludge more often
	Hydraulic overload	Reduce recycle; provide flow buffering

Table 6-20 presents a listing of potential disinfectants for onsite application. Selection of the best disinfectant is dependent upon the characteristics of the disinfectant, the characteristics of the wastewater and the treatment processes preceding disinfection. The most important disinfectants for onsite application are chlorine, iodine, ozone, and ultraviolet light, since more is known about these disinfectants and equipment is available for their application.

TABLE 6-20

SELECTED POTENTIAL DISINFECTANTS FOR ONSITE APPLICATION

Disinfectant	Formula	Form Used	Equipment
Sodium Hypochlorite	NaOCl	Liquid	Metering Pump
Calcium Hypochlorite	$Ca(OCl)_2$	Tablet	Tablet Contactor
Elemental Iodine	I_2	Crystals	Crystal/Liquid Contactor
Ozone	O_3	Gas	Generator, Gas/ Liquid Contactor
Ultraviolet Light	-	Electromagnetic Radiation	Thin Film Radiation Contactor

Disinfection processes for onsite disposal must necessarily be simple and safe to operate, reliable, and economical. They normally are the terminal process in the treatment flow sheet.

6.5.2 The Halogens - Chlorine and Iodine

6.5.2.1 Description

Chlorine and iodine are powerful oxidizing agents capable of oxidizing organic matter, including organisms, at rapid rates in relatively low concentrations. Some of the characteristics of these halogens appear in Table 6-21 (20)(44)(45).

TABLE 6-21

HALOGEN PROPERTIES (27)

Halogen	Form	Commercial Strength Available %	Specific Gravity	Handling Materials	Characteristics
Sodium Hypochlorite	Liquid	12 - 15	1.14 - 1.17	Ceramic, Glass, Plastic, Rubber	Deteriorates rapidly at high temperatures, in sunlight, and at high concentrations.
Calcium Hypochlorite	Tablet (115 gm)	70	-	Glass, Wood, Fiberglass, Rubber	Deteriorates at 3-5%/year
Iodine	Crystals	100	4.93	Fiberglass, Some Plastics	Stable in water; solubility: 10° - 200 mg/l 20° - 290 mg/l 30° - 400 mg/l

Chlorine may be added to wastewater as a gas, Cl_2. However, because the gas can represent a safety hazard and is highly corrosive, chlorine would normally be administered as a solid or liquid for onsite applications. Addition of either sodium or calcium hypochlorite to wastewater results in an increase in pH and produces the chlorine compounds hypochlorous acid, HOCl, and hypochlorite ion, OCl^-, which are designated as "free" chlorine. In wastewaters containing reduced compounds such as sulfide, ferrous iron, organic matter, and ammonia, the free chlorine rapidly reacts in nonspecific side reactions with the reduced compounds, producing chloramines, a variety of chloro-organics, and chloride. Free chlorine is the most powerful disinfectant, while chloride has virtually no disinfectant capabilities. The other chloro-compounds, often called combined chlorine, demonstrate disinfectant properties that range from moderate to weak. Measurement of "chlorine residual" detects all of these forms except chloride. The difference between the chlorine dose and the residual, called "chlorine demand," represents the consumption of chlorine by reduced materials in the wastewater (Table 6-22). Thus, in disinfection system design, it is the chlorine residual (free and combined) that is of importance in destroying pathogens.

TABLE 6-22

CHLORINE DEMAND OF SELECTED DOMESTIC WASTEWATERS[a]

Wastewater	Chlorine Demand mg/l
Raw fresh wastewater	8 - 15
Septic tank effluent	30 - 45
Package biological treatment plant effluent	10 - 25
Sand-filtered effluent	1 - 5

[a] Estimated concentration of chlorine consumed in nonspecific side reactions with 15-minute contact time.

Iodine is normally used in the elemental crystalline form, I_2, for water and wastewater disinfection. Iodine hydrolyzes in water to form the hypoiodus forms, HIO and IO^-, and iodate, IO_3. Normally, the predominant disinfectant species in water are I_2, HIO, and IO^-, as little IO_3 will be found at normal wastewater pH values (less than pH 8.0). Iodine does not appear to react very rapidly with organic compounds or ammonia in wastewaters. As with chlorine, however, most wastewaters will exhibit an iodine demand due to nonspecific side reactions. The reduced form of iodine, iodide, which is not an effective disinfectant, is not detected by iodine residual analyses.

6.5.2.2 Applicability

The halogens are probably the most practical disinfectants for use in onsite wastewater treatment applications. They are effective against waterborne pathogens, reliable, easy to apply, and are readily available.

The use of chlorine as a disinfectant may result in the production of chlorinated by-products which may be toxic to aquatic life. No toxic by-products have been identified for iodine at this time.

6.5.2.3 Performance

The performance of halogen disinfectants is dependent upon halogen residual concentration and contact time, wastewater characteristics, nature of the specific pathogen, and wastewater temperature (20). Wastewater characteristics may effect the selection of the halogen as well as the required dosage due to the nonspecific side reactions that occur (halogen demand). Chlorine demands for various wastewaters are presented in Table 6-22. The demand of wastewaters for iodine is less clear. Some investigators have reported iodine demands 7 to 10 times higher than those for chlorine in wastewaters (46)(47) while others indicate that iodine should be relatively inert to reduced compounds when compared to chlorine (48). Design of halogen systems is normally based upon dose-contact relationships since the goal of disinfection is to achieve a desired level of pathogen destruction in a reasonable length of time with the least amount of disinfectant. Because of the nonspecific side reactions that occur, it is important to distinguish between halogen dose and halogen residual after a given contact period in evaluating the disinfection process.

Table 6-23 provides a summary of halogen residual-contact time information for a variety of organisms (43). These are average values taken from a number of studies and should be used with caution. Relationships developed between disinfectant residual, contact time, and efficiency are empirical. They may be linear for certain organisms, but are often more complex. Thus, it is not necessarily true that doubling the contact time will halve the halogens residual requirements for destruction of certain pathogens. In the absence of sufficient data to make these judgements, conservative values are normally employed for residual-dose requirements.

The enteric bacteria are more sensitive to the halogens than cysts or virus. Thus, the use of indicator organisms to judge effective disinfection must be cautiously employed.

Temperature effects also vary with pathogen and halogen, and the general rule of thumb indicates that there should be a two to threefold decrease in rate of kill for every 10° C decrease in temperature within the limits of 5 to 30° C.

TABLE 6-23

PERFORMANCE OF HALOGENS AND OZONE AT 25°C [After (43)]

Halogen	Necessary Residual After 10 Min. to Achieve 99.999% Destruction (mg/l)		
	Amoebic Cysts	Enteric Bacteria	Enteric Virus
HOCl (Predominates @ pH <7.5)	3.5	0.02	0.4
OCL^- (Predominates @ pH >7.5)	40	1.5	100
NH_2Cl[a]	20	4	20
I_2 (Predominates @ pH <7.0)	3.5	0.2	15
HIO/IO^- (Predominates @ 8.0>pH>7.0)	7	0.05	0.5
O_3	0.3->1.8	0.2-0.3	0.2-0.3

[a] $NHCl_2$:NH_2Cl Efficiency = 3.5:1

6.5.2.4 Design Criteria

The design of disinfection processes requires the determination of the wastewater characteristics, wastewater temperature, pathogen to be destroyed, and disinfectant to be employed (20). From this information, the required residual-concentration relationship may be developed and disinfectant dose may be calculated.

Wastewater characteristics dictate both halogen demand and the species of the disinfectant that predominates. In effluents from sand filters, chlorine demands would be low and, depending upon pH, hypochlorous acid or hypochlorite would prevail if chlorine is used. (The effluent would be almost completely nitrified, leaving little ammonia available for reaction). At pH values below 7.5, the more potent free chlorine form,

HOCl, would predominate. It is clear from Table 6-23 that pH plays an important role in the effectiveness of chlorine disinfection against virus and cysts (10 to 300 fold differences).

The effect of temperature is often ignored except to ensure that conservatively long contact times are selected for disinfection. Temperature corrections are necessary for estimating iodine doses if a saturator is employed, since the solubility of iodine in water decreases dramatically with decreased temperature.

Design of onsite wastewater disinfection systems must result in conservative dose-contact time values, since careful control of the process is not feasible. Guidelines for chlorine and iodine disinfection for onsite applications are presented in Table 6-24. These values are guidelines only, and more definitive analysis may be warranted in specific cases.

TABLE 6-24

HALOGEN DOSAGE DESIGN GUIDELINES

Disinfectant	Dose[a] Septic Tank Effluent mg/l	Dose[a] Package Biological Process Effluent mg/l	Dose[a] Sand Filter Effluent mg/l
Chlorine			
pH 6	35-50	15-30	2-10
pH 7	40-55	20-35	10-20
pH 8	50-65	30-45	20-35
Iodine[b]			
pH 6-8	300-400	90-150	10-50

[a] Contact time = 1 hour at average flow and 20°C; increase contact time to 2 hours at 10°C and 8 hours at 5°C for similar efficiency.

[b] Based upon very small data base, assuming iodine demand from 3 to 7 times that of chlorine.

The sizing of halogen feed systems is dependent upon the form of the halogen used and the method of distribution. Sample calculations are presented below.

Sample calculations:

Estimate of sodium hypochlorite dose - liquid feed

Halogen: NaOCl - trade strength 15% (150 g/l)
Dose required: 20 mg/l available chlorine
Wastewater flow: 200 gpd average

1. Available chlorine =

   (150 g/l) x (3.785 l/gal) x (1.0 lb/453.6 g) = 1.25 lb/gal

2. Dose required =

   (20 mg/l) x (3.785 l/gal) x (1 lb/453.6 g) x (10^{-3} g/mg)

   = 1.67 x 10^{-4} lb/gal

3. Dose required =

   (1.67 x 10^{-4} lb/gal) x (200 gal/d) = 3.34 x 10^{-2} lb/d

4. NaOCl dose =

   (3.34 x 10^{-2} lb/d) ÷ (1.25 lb/gal) = 0.027 gal/day

Estimate of halogen design - tablet feed

Halogen: $Ca(OCL)_2$ tablet - 115 g; commercial strength 70%
Dose Required: 20 mg/l available chlorine
Wastewater Flow: 200 gpd (750 l/d)

1. Available chlorine in tablet = 0.7 x 115(g) = 80.5 g/tablet

2. Dose required = 20 (mg/l) x 750 (l/d) = 15 g/d

3. Tablet consumption = $\frac{15\ (g/d)}{80.5\ (g/tablet)}$ = 0.19 tablets/day

   or: 5.4 days/tablet

6.5.2.5 Construction Features

a. Feed Systems

There are basically three types of halogen feed systems commercially available for onsite application: stack or tablet feed systems, liquid feed systems, and saturators. Tablet feed devices for $Ca(OCl)_2$ tablets (Figure 6-13) are constructed of durable, corrosion-free plastic or fiberglass, and are designed for in-line installation. Wastewater flows past the tablets of $Ca(OCl)_2$, dissolving them in proportion to flow rate (depth of immersion). Tablets are added as requried upon manual inspection of the unit. One commercial device provides 29-115 g/tablet per tube which would require refilling in approximately 155 days (5.4 days/tablet x 29).

Halogens may also be fed to the wastewater by an aspirator feeder or a suction feeder. The aspirator feeder operates on a simple hydraulic principle that employs the use of the vacuum created when water flows either through a venturi tube or perpendicular to a nozzle. The vacuum created draws the disinfection solution from a container into the disinfection unit, where it is mixed with wastewater passing through the unit. The mixture is then injected into the main wastewater stream. Suction feeders operate by pulling the disinfection solution from a container by suction into the disinfection unit. The suction may be created by either a pump or a siphon.

The storage reservoir containing the halogen should provide ample volume for several weeks of operation. A 1-gal (4-1) storage tank would hold sufficient 15% sodium hypochlorite solution for approximately 37 days before refill (see sample computation). A 2-gal (8-1) holding tank would supply 50 days of 10% sodium hypochlorite. A 15% sodium hypochlorite solution would deteriorate to one-half its original strength in 100 days at 25°C (49). The deterioration rate of sodium hypochlorite decreases with decreased strength; therefore, a 10% solution would decrease to one-half strength in about 220 days.

If liquid halogen is dispersed in this fashion, care must be taken to select materials of construction that are corrosion-resistant. This includes storage tanks, piping, and appurtenances as well as the pump.

Iodine is best applied to wastewater by means of a saturator whereby crystals of iodine are dissolved in carriage water subsequent to being pumped to a contact chamber (Figure 6-14). Saturators may be constructed or purchased commercially. The saturator consists of a tank of fiberglass or other durable plastic containing a supporting base medium

FIGURE 6-13

STACK FEED CHLORINATOR

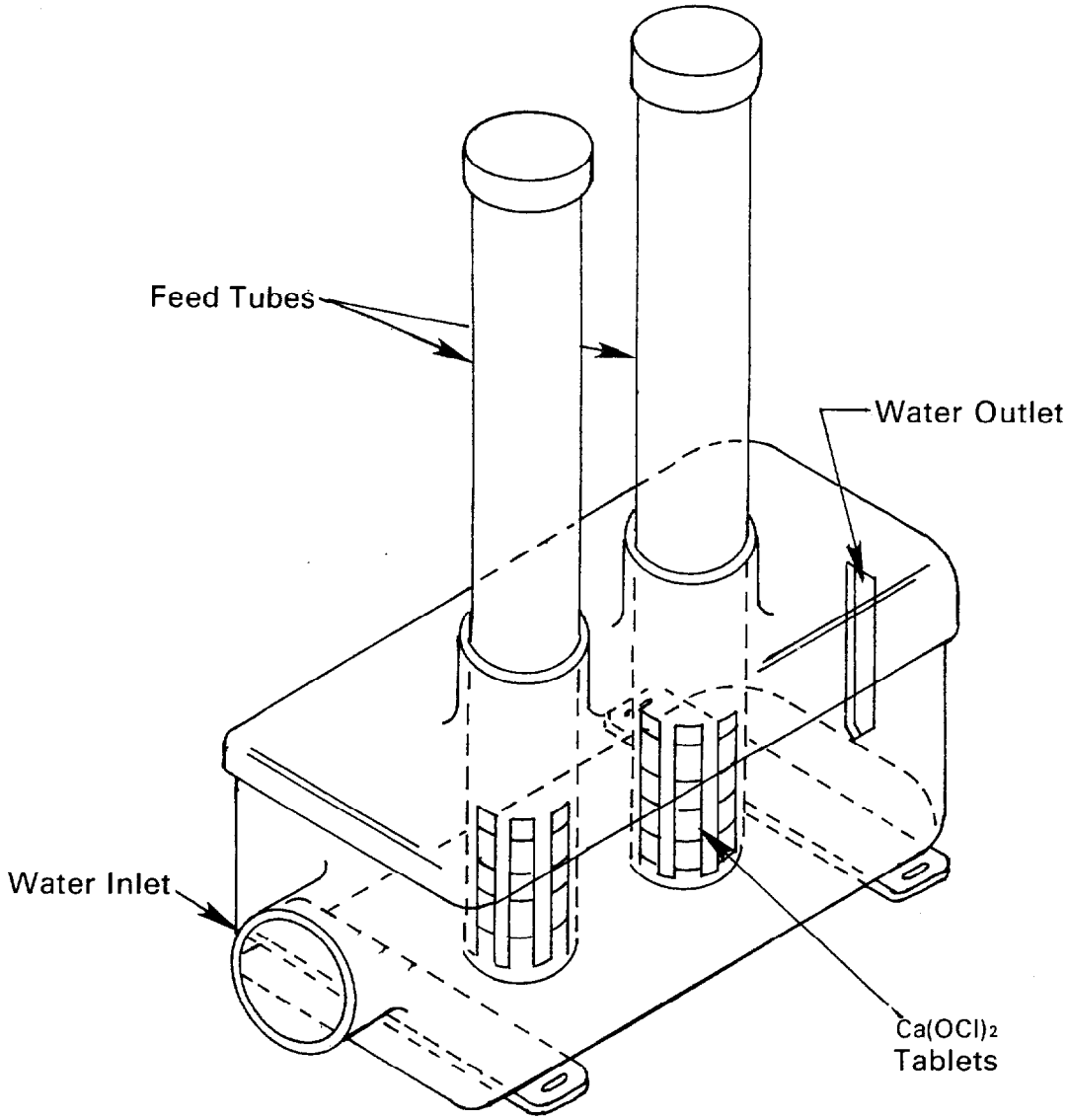

FIGURE 6-14

IODINE SATURATOR

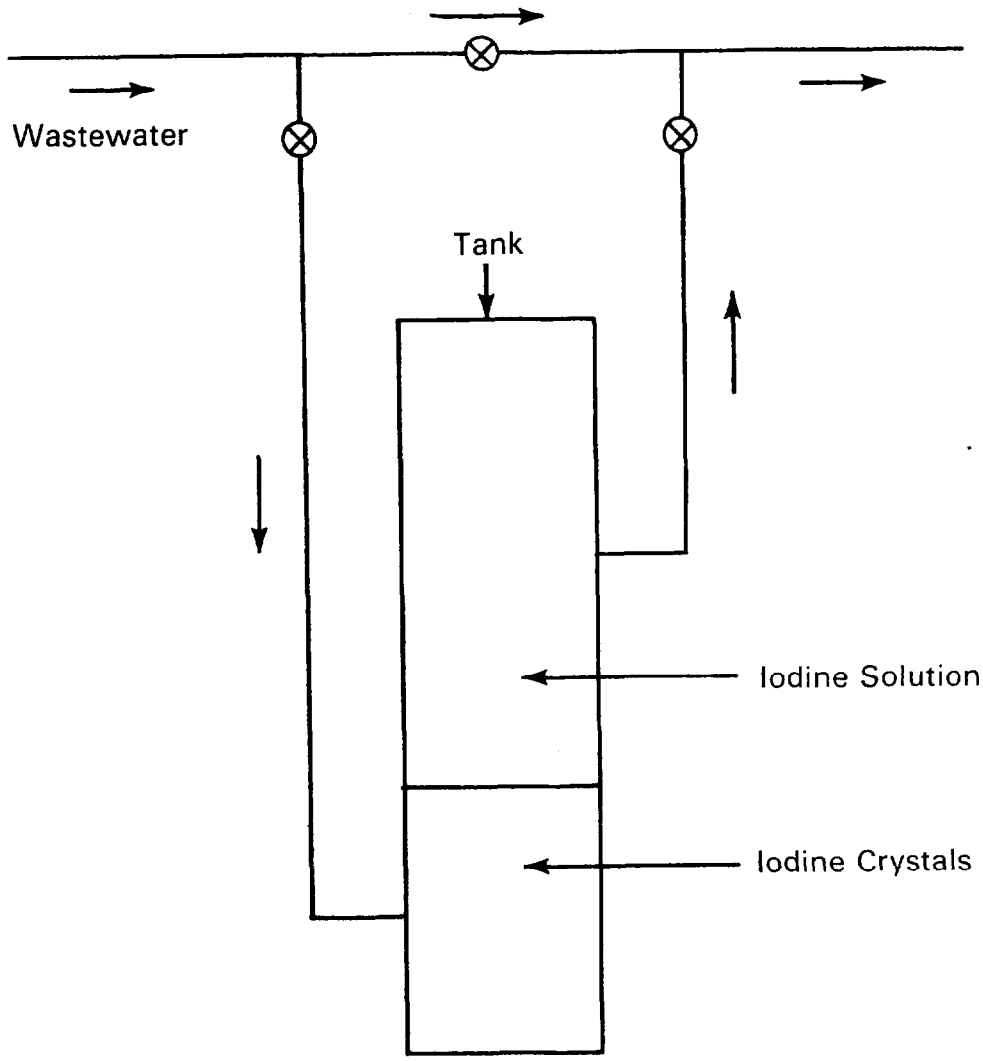

and iodine crystals. Pretreated wastewater is split, and one stream is fed to the saturator. The dissolution of iodine is dependent upon water temperature, ranging from 200 to 400 mg/l (Table 6-21). The iodine solution from the saturator is subsequently blended with the wastewater stream, which is discharged to a contact chamber. Depending upon saturator size and dosage requirements, replenishment of iodine every 1 to 2 yr may be required (assumes a dosage of 50 mg/l for 750 l/day using a 0.2-cu-ft saturator).

b. Contact Basin

Successful disinfection depends upon the proper mixing and contact of the disinfectant with the wastewater. If good mixing is achieved, a contact time of 1 hour should be sufficient to achieve most onsite disinfection objectives when using doses presented in Table 6-24. Where flows are low (e.g., under 1,000 gal per day) (3,785 l per day), contact basins may be plastic, fiberglass, or a length of concrete pipe placed vertically and outfitted with a concrete base (Figure 6-15). A 48-in. (122-cm) diameter concrete section would theoretically provide 6 hr of wastewater detention for an average flow of 200 gal per day (757 l per day) if the water depth were only approximately 6 in. (15 cm). A 36-in. (91-cm) diameter pipe section provides 6 hr detention at approximately 12 in. (30 cm) of water depth for the same flow. Therefore, substantially longer theoretical detention times than necessary for ideal mixing conditions are provided using 36- or 48-in. (91- or 122-cm) diameter pipe. This oversizing may be practically justified for onsite applications with low flows, since good mixing may be difficult to achieve.

Contact basins should be baffled in order to prevent serious short-circuiting within the basin. One sample baffling arrangement is illustrated in Figure 6-15.

6.5.2.6 Operation and Maintenance

The disinfection system should be designed to minimize operation and maintenance requirements, yet insure reliable treatment. Routine operation and maintenance of premixed liquid solution feed equipment consists of replacing chemicals, adjusting feed rates, and maintaining the mechanical components. Tablet feed chlorination devices should require less frequent attention, although recent experience indicates that caking of hypochlorite tablets occurs due to the moisture in the chamber. Caking may result in insufficient dosing of chlorine, but may also produce excessive dosage due to cake deterioration and subsequent spillage into the wastewater stream. Dissolution of chlorine may also be erratic, requiring routine adjustment of tablet and liquid elevation

(experience with some units indicates that dissolution rates actually increase with decreased flow rates). Routine maintenance of iodine saturators includes replacing chemicals, occasionally adjusting feed rates, redistributing iodine crystals within the saturator, and maintaining mechanical components.

FIGURE 6-15

SAMPLE CONTACT CHAMBER

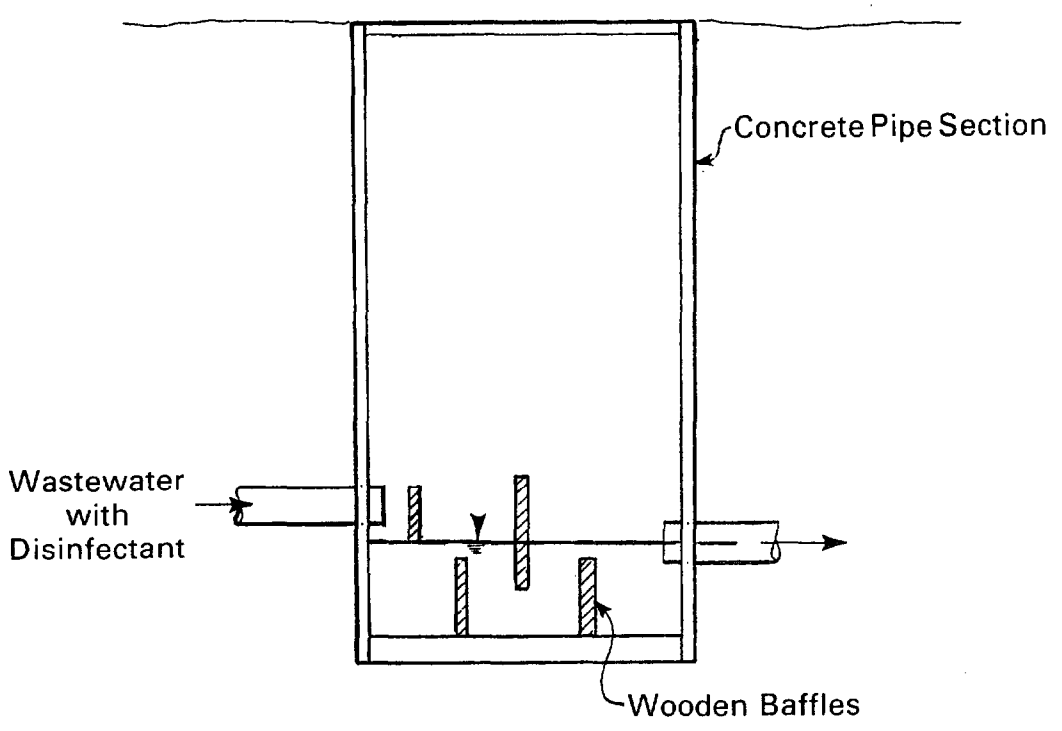

Process control is best achieved by periodic analysis of halogen residuals in the contact chamber. The halogen residuals can be measured by unskilled persons using a color comparator. Periodic bacteriological analyses of treated effluents provide actual proof of efficiency. Skilled technicians are required to sample and analyze for indicator organisms or pathogens.

It is estimated that tablet feed chlorinators could be operated with approximately 6 unskilled man-hr per yr including monthly chlorine residual analyses. Iodine saturator systems and halogen liquid feed systems may require 6 to 10 semi-skilled man-hr per yr. Electrical power consumption would be highly variable depending upon other process pumping requirements, as well as the use of metering pumps and controls. Chemical requirements will vary, but are estimated to be about 5 to 25 lb (2 to 11 kg) of iodine and 5 to 15 lb (2 to 7 kg) of available chlorine per yr for a family of four.

6.5.2.7 Other Considerations

In making a final decision on halogen disinfection, other considerations must be included in addition to cost, system effectiveness, and reliability. Without a dechlorination step, chlorine disinfection may be ruled out administratively. Currently, there is no evidence that iodine or its compounds are toxic to aquatic life.

6.5.3 Ultraviolet Irradiation

6.5.3.1 Description

The germicidal properties of ultraviolet (UV) irradiation have been recognized for many years (50)(51). UV irradiation has been used for the disinfection of water supplies here and abroad, and currently finds widest application for small water systems for homes, commercial establishments, aboard ship, and in some industrial water purification systems. The use of UV irradiation for wastewater disinfection has only recently been seriously studied (52)(53).

Ultraviolet is germicidal in the wave length range of 2,300 to 3,000 Å, its greatest efficiency being at 2,540 Å. Currently, high-intensity, low-pressure mercury vapor lamps emit a major percentage of their energy at this wave length, making them most efficient for use. The primary mode of action of UV is the denaturation of nucleic acids, making it especially effective against virus.

In order to be effective, UV energy must reach the organism to be destroyed. Unfortunately, UV energy is rapidly absorbed in water and by a variety of organic and inorganic molecules in water. Thus, the transmittance or absorbance properties of the water to be treated are critical to successful UV disinfection. To achieve disinfection, the water to be treated is normally exposed in a thin film to the UV source. This may be accomplished by enclosing the UV lamps within a chamber, and

directing flow through and around the lamps. It may also be accomplished by exposing a thin film of water flowing over a surface or weir to a bank of lamps suspended above and/or below the water surface.

The lamps are encased within a clear, high transmittance, fused quartz glass sleeve in order to protect them. This also insulates the lamps so as to maintain an optimum lamp temperature (usually about 105° F or 41° C). To ensure maintenance of a very high transmittance through the quartz glass enclosure, wipers are usually provided with this equipment. Figures 6-16 and 6-17 depict a typical UV disinfection lamp arrangement currently being used. There are a number of commercially available units that may be applicable to onsite wastewater applications.

6.5.3.2 Applicability

Site conditions should not restrict the use of UV irradiation processes for onsite application, although a power source is required. The unit must be housed to protect it from excessive heat, freezing, and dust. Wastewater characteristics limit the applicability of UV equipment since energy transmission is dependent upon the absorbance of the water to be treated. Therefore, only well-treated wastewater can be disinfected with UV.

6.5.3.3 Factors Affecting Performance

The effectiveness of UV disinfection is dependent upon UV power, contact time, liquid film thickness, wastewater absorbance, process configuration, input voltage, and temperature (50)(51)(52).

The UV power output for a lamp is dependent upon the input voltage, lamp temperature, and lamp characteristics. Typically, UV output may vary from as low as 68% of rated capacity at 90 volts to 102% at 120 volts. Lamp temperatures below and above about 104° F (40° C) also results in decreased output. The use of quartz glass enclosures normally ensures maintenance of optimum temperature within the lamp.

Since disinfection by UV requires that the UV energy reaches the organisms, a measure of wastewater absorbance is crucial to proper design. Transmissability is calculated as an exponential function of depth of penetration and the absorption coefficient of the wastewater:

$$T = e^{-ad}$$

FIGURE 6-16

TYPICAL UV DISINFECTION UNIT

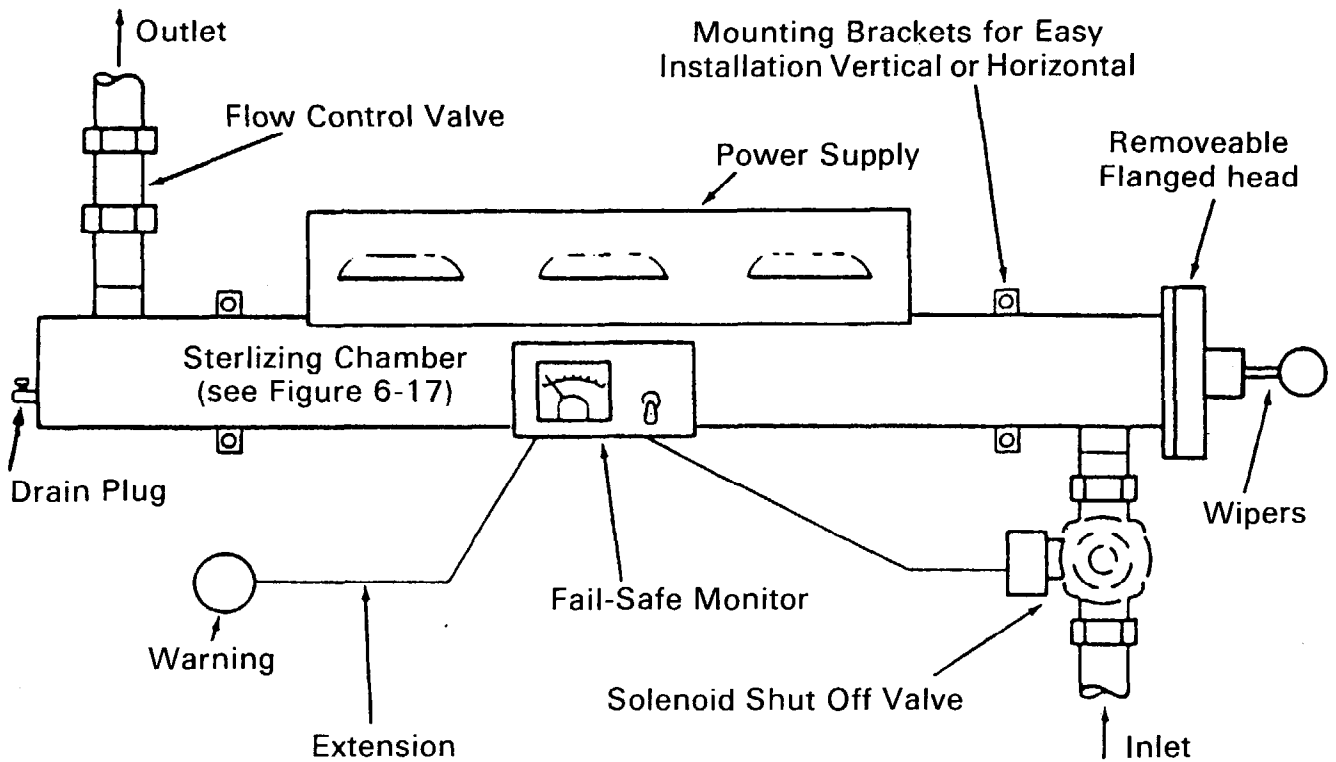

FIGURE 6-17

TYPICAL UV STERILIZING CHAMBER

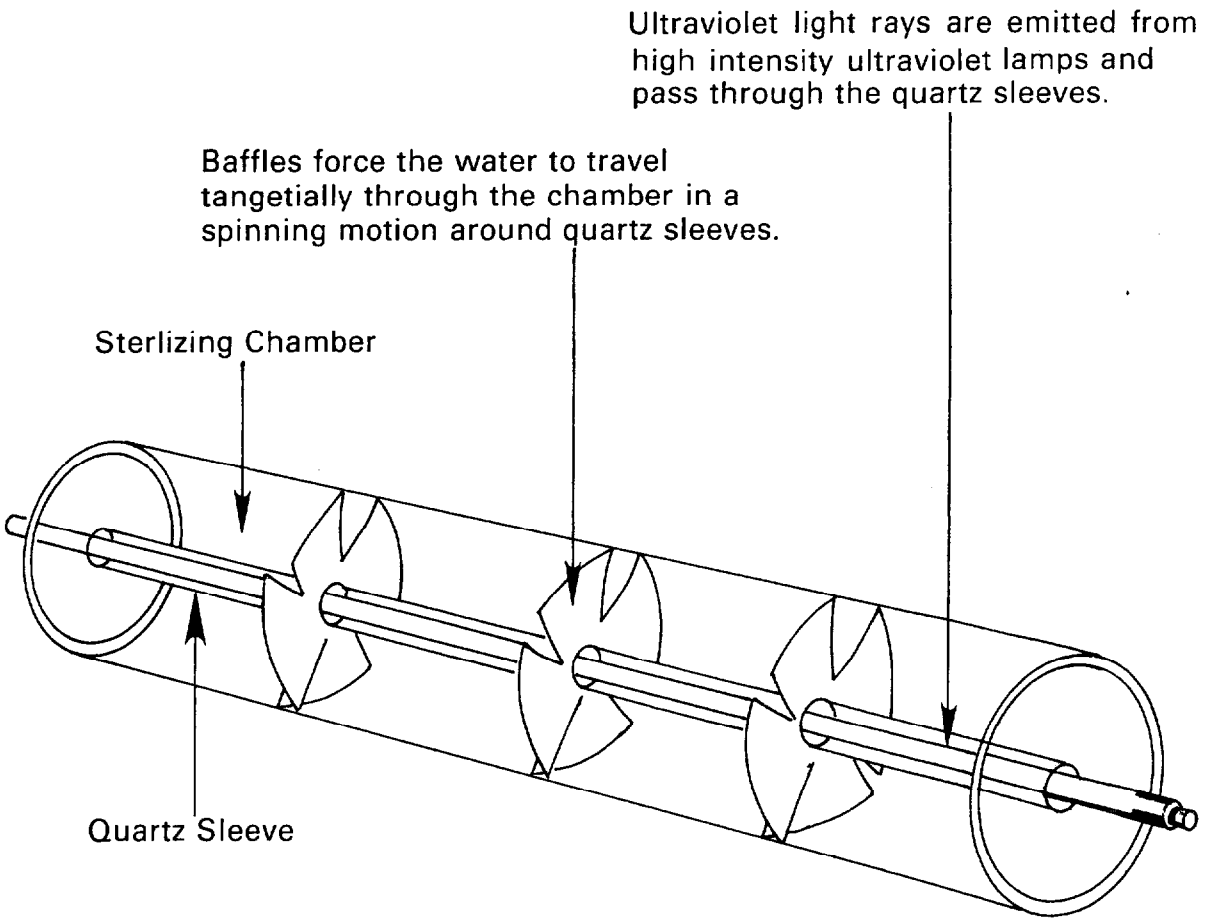

Typical sterilizers employ one to twelve lamps per sterilizing chamber.

where T is the fraction transmitted, a is the absorption coefficient in cm^{-1} at 2,537 Å, and d is the depth in cm. Typically, a very high-quality distilled water will have an absorption coefficient of 0.008, where tap water would normally vary from 0.18 to 0.20. Wastewaters polished with sand filtration should produce absorption coefficients of from 0.13 to 0.20, whereas septic tank effluents may be as high as 0.5. Currently, rule of thumb requirements for UV application indicate that turbidities should be less than 10 JTU and color less than 15 mg/l. (1 Jackson Turbidity Unit [JTU] is about equivalent to 1 Formazin Turbidity Unit [FTU]).

The relationship between UV power and contact time is still uncertain. Empirical relationships have been used to express the performance of UV equipment. Currently, the empirical term, microwatt seconds per square centimeter (mw sec/cm^2), is used (50)(51).

The required contact time for a given exposure is dictated by the wastewater absorbance, film thickness, and the pathogen to be destroyed. Typical values of UV dosage for selected organisms appear in Table 6-25.

This tabulation indicates that a wide spectrum of organisms are about equally sensitive to UV irradiation. There are exceptions to this, however; Bacillus spores require dosages in excess of 220,000 mw sec/cm^2, and protozoan as high as 300,000 mw sec/cm^2.

One characteristic trait of UV disinfection of water has been the photoreactivation of treated organisms within the wastewater. Exposure of the wastewater to sunlight following UV disinfection has produced as much as 1.5 log increase in organisms concentration. This phenomena does not always occur, however, and recent field tests indicate that photoreactivation may not be of significant concern (52).

6.5.3.4 Design

There has been little long-term experience with wastewater UV disinfection (2)(52)(53). Therefore, firm design criteria are not available. One may draw upon water supply disinfection criteria, however, for conservative design (50)(51).

TABLE 6-25

UV DOSAGE FOR SELECTED ORGANISMS

Organism	Dosage for 99% Kill at a = 0.0 mw sec/cm^2
Shigella	4,000
Salmonella	6,000
Poliovirus	6,000
IH Viral Form	8,000
E. Coli	7,000
Protozoan	180-300,000[a]
Fecal Coliform	23,000[b]

[a] For 99.9% inactivation.

[b] Field studies corrected to a = 0; 99.96% inactivation.

Wastewater should be pretreated to a quality such that turbidity is less than 10 JTU and color is less than 15 mg/l. Intermittent sand filtered effluent quality will generally not exceed these limits when properly managed. It would be desirable to provide measurement of UV transmittance in the wastewater on a continuous basis to ensure that sufficient UV power reaches the organism to be treated. Dosage values should be conservative until more data are available. Therefore, a desired minimum UV dose of 16,000 mw sec/cm^2 or kw sec/m^3 should be applied at all points throughout the disinfection chamber. A maximum depth of penetration should be limited to about 2 in. (5 cm) to allow for variation in wastewater absorption. The UV lamps should be enclosed in a quartz glass sleeve and appropriate-automatic cleaning devices should be provided. A UV intensity meter should be installed at a point of greatest water depth from the UV tubes, and an alarm provided to alert the owner when values fall below on acceptable level.

6.5.3.5 Construction Features

Commercially available UV units sold primarily for water supply disinfection are applicable for onsite wastewater disinfection. Most of these units are self-contained and employ high-intensity UV irradiation over a thin film of water for short contact times.

The self-contained unit should be installed following the last treatment process in the treatment sequence, and should be protected from dust, excessive heat, and freezing. It should be accessible for maintenance and control. As described in the previous section, the unit should be equipped with a cleaning device (manual or automatic) and an intensity meter that is properly calibrated. Flow to the unit should be maintained relatively constant. This is often achieved by means of a pressure compensated flow control valve.

Some larger UV modules are available that consist of a series of lamps encased within quartz glass enclosures. The module may be placed within the flow stream such that all water passes through the module. UV lamps positioned over discharge weirs, and therefore out of the water, are also available. These systems are not as efficient as flow through units since only a fraction of the lamp arc intercepts the water. Control of the water film over the weir plate (V-notch or sharp crested) is difficult to maintain unless upstream flows are carefully regulated. Cleaning and metering devices are required for both of these systems.

Depending on upstream processes and the UV unit employed, the UV system may be operated on a continuous flow or intermittent basis. For small flows, self-contained tubular units and intermittent flow would be employed. Influent to the unit could be pumped to the UV system from a holding tank. In order to obtain full-life expectancy of the UV lamps, they should be operated continuously regardless of flow arrangement. Where UV modules are employed, continuous flow through the contact chamber may be more practical.

6.5.3.6 Operation and Maintenance

Routine operational requirements include quartz glass enclosure cleaning, lamp replacement, and UV intensity meter reading. Since UV disinfection does not produce a residual, the only monitoring required would be periodic bacterial analyses by skilled technicians. Periodic maintenance of pumping equipment and controls, and cleaning of quartz jackets during lamp replacement, would also be required.

Cleaning of quartz glass enclosures is of paramount importance since UV transmittance is severely impaired by the accumulation of slimes on the enclosures. Cleaning is required at least 3 to 4 times per year at a minimum, and more often for systems employing intermittent flow. If automatic wipers are employed, the frequency of manual cleaning may be reduced to twice per year. Expected lives of lamps are variable, normally ranging from 7,000 to 12,500 hours. It is good practice, however, to replace lamps every 10 months, or when metered UV intensity falls below acceptable values. A complete cleaning of quartz glass enclosures with alcohol is required during lamp replacement. Based on limited operational experience, it is estimated that 10 to 12 man-hr per yr are required to maintain the UV system. Power requirements for the UV system for design flow rates up to 4 gpm (0.25 l/ sec) are approximately 1.5 kWh/day.

6.5.4 Ozonation

6.5.4.1 Description

Ozone, O_3, a pale blue gas with pungent odor, is a powerful oxidizing agent. It is only slightly soluble in water, depending upon temperature, and is highly unstable. Because of its instability, ozone must be generated on site.

Ozone is produced by the dissociation of molecular oxygen into atomic oxygen with subsequent formation of O_3. It is produced commercially by passing an oxygen-containing feed gas between electrodes separated by an insulating material (54)(55). In the presence of a high-voltage, high-frequency discharge, ozone is generated from oxygen in the electrode gap.

Ozone is a powerful disinfectant against virus, protozoan cysts, and vegetative bacteria (54)(55)(56)(57). It is normally sparged into the water to be treated by means of a variety of mixing and contact devices. Because of its great reactivity, ozone will interact with a variety of materials in the water, resulting in an ozone demand. The short half-life of ozone also results in the rapid disappearance of an ozone residual in the treated water.

6.5.4.2 Applicability

Ozone is currently used to disinfect water supplies in the United States and Europe, and is considered an excellent candidate as an alternate wastewater disinfectant (54)(55)(56)(57). The major drawback to its

widespread use to date has been the expense of generation. There is no documented long-term field experience with ozone disinfection onsite.

Since ozone is a highly corrosive and toxic gas, its generation and use onsite must be carefully monitored and controlled. The generator requires an appropriate power source, and must be properly housed to protect it from the elements. Wastewater characteristics will have an impact on ozone disinfectant efficiency and must be considered in the evaluation of this process.

Data on the effectiveness of ozone residuals against pathogens are scant. Employing the same criteria as used for halogens, ozone appears to be more effective against virus and amoebic cysts than the halogens (Table 6-23).

The literature indicates that ozone action is not appreciably affected by pH variations between 5.0 and 8.0 (58). Turbidity above values of 5 JTU has a pronounced effect upon ozone dosage requirements, however (47)(58). Limited field experience indicates that ozone requirements may approximately double with a doubling of turbidity to achieve comparable destruction of organisms (47).

Currently, with very limited operating data, prescribed ozone applied dosages recommended for wastewater disinfection vary from 5 to 15 mg/l depending upon contactor efficiencies and pathogen to be destroyed.

6.5.4.3 Construction Features

The ozone disinfection system consists of the ozone gas generation equipment, a contactor, appropriate pumping capacity to the contactor and controls. There are two basic types of generating equipment. The tube-type unit is an air-cooled system whereby ozone is generated between steel electrode plates faced with ceramic. Oxygen-containing feed gas may be pure oxygen, oxygen-enriched air, or air. The gas is cleaned, usually through cartride-type inpingement filters, and compressed to about 10 psi. The compressed gas is subsequently cooled and then dried prior to being reacted in the ozone contacting chamber. Drying is essential to prevent serious corrosion problems within the generator.

The generated ozone-enriched air is intimately mixed with wastewater in a contacting device. Ozone contactors include simple bubble diffusers in an open tank, packed columns, and positive pressure injection (PPI) devices. Detention times within these systems range from 8-15 min in

the bubble diffuser units to 10-30 sec in packed columns and PPI systems (59)(60). Limited data are currently available on long-term use of these contactor devices for onsite systems. There are relatively few field-tested, small-capacity systems commercially available.

6.5.4.4 Operation and Maintenance

The ozone disinfection system is a complex series of mechanical and electrical units, requiring substantial maintenance, and is susceptible to a variety of malfunctions. Since data on long-term experience are relatively unavailable, it is not possible to assess maintenance requirements on air cleaning equipment, compressors, cooling and drying equipment, and contactors. It is estimated that 8 to 10 kWh/lb of ozone generated will be required (54). Monitoring requirements are similar to those for UV disinfection, including occasional bacterial analyses and routine ozone monitoring.

6.6 Nutrient Removal

6.6.1 Introduction

6.6.1.1 Objectives

Nitrogen and phosphorus may have to be removed from wastewaters under certain circumstances. Both are plant nutrients and may cause undesirable growths of plants in lakes and impoundments. Nitrogen may also create problems as a toxicant to fish (free ammonia), as well as to animals and humans (nitrates). In addition, the presence of reduced nitrogen may create a significant oxygen demand in surface waters.

Nitrogen may be found in domestic wastewaters as organic nitrogen, as ammonium, or in the oxidized form as nitrite and nitrate. The usual forms of phosphorus in domestic wastewater include orthophosphate, polyphosphate, pyrophosphate, and organic phosphate. Sources of wastewater nitrogen and phosphorus from the home are presented in Table 4-4.

The removal or transformation of nitrogen and phosphorus in wastewaters has been the subject of intensive research and demonstration over the past 15 to 20 yr. Excellent reviews of the status of these treatment processes can be found in the literature (61)(62). As discussed in Chapter 7, the soil may also serve to remove and/or transform the nitrogen and phosphorus in wastewaters percolating through them.

The treatment objective for nitrogen and phosphorus in wastewater is dependent upon the ultimate means of disposal. Surface water quality objectives may require limitations of total phosphate, organic and ammonia nitrogen, and/or total nitrogen. Subsurface water quality objectives are less well developed, but may restrict nitrate-nitrogen and/or total phosphate.

6.6.1.2 Application of Nutrient Removal Processes to Onsite Treatment

There are a number of nutrient removal processes applicable to onsite wastewater treatment, but there are very little data on long-term field applications of these systems. In-house wastewater management through segregation and household product selection appears to be the most practical and cost-effective method for nitrogen and phosphorus control onsite. Septic tanks may remove a portion of these nutrients as flotable and settleable solids. Other applicable chemical, physical, or biological processes may also be employed to achieve a given level of nutrient removal. Although these supplemental processes may be very effective in removing nutrients, they are normally complex and energy and labor intensive.

Since the state-of-the-art application of onsite nutrient removal is limited, the discussion that follows is brief. Processes that may be successful for onsite application are described. Acceptable design, construction, and operation data are presented where they are available.

6.6.2 Nitrogen Removal

6.6.2.1 Description

Table 6-26 outlines the potential onsite nitrogen control options. In many instances, these options also achieve other treatment objectives as well, and should be evaluated as to their overall performance. The removal or transformation of nitrogen within the soil absorption system is described fully in Chapter 7.

6.6.2.2 In-House Segregation

Chapter 4 provides a detailed description of the household wastewater characteristics and sources of these wastewaters. Between 78 and 90% of the nitrogen in the wastewater discharged from the home is from toilets. Separation of toilet wastewaters would result in average nitrogen levels

TABLE 6-26

POTENTIAL ONSITE NITROGEN CONTROL OPTIONS[a]

Option	Description	Effectiveness	Comments	Onsite Technology Status
In-House Segregation	Separate toilet wastes from other wastewater	78-90% removal of N in blackwater	Management of residue required	Good
Biological Nitrification	Granular Filters	>90% conversion to nitrate	Achieves high level of BOD and solids removal	Good
	Aerobic package plants	85-95% conversion to nitrate	May achieve good levels of BOD and solids removal; labor/energy intensive; residue management	Good
Biological Denitrification	Anaerobic processes following nitrification	80-95% removal of N	Requires carbon source; labor intensive; high capital cost	Tentative
Ion Exchange	Cationic exchange-NH_4	>99% removal of NH_4^+ or NO_3^-	Very high operation costs	Tentative
	Anionic exchange-NO_3			

[a] Not including the soil absorption system--see Chapter 7.

of about 0.004 lb/cap/day (1.9 mg/cap/day) or 17 mg/l as N in the remaining graywater (Tables 4-4 and 4-5). Chapter 5 describes the process features, the performance, and the operation and maintenance of low-water carriage and waterless toilet systems. The resultant residuals from toilet segregation, whether they be ash, compost, chemical sludge, or blackwater, must be considered in this treatment strategy. A discussion of residuals disposal is presented in Chapter 9.

The success of this method of nitrogen removal is dependent upon appropriate management of the in-house segregation fixtures and the disposal of the residues from them. These devices must be considered a part of the treatment system when developing appropriate authority for institutional control.

6.6.2.3 Biological Processes

Nitrogen undergoes a variety of biochemical transformations depending upon its form and the environmental conditions (61). Organic nitrogen in domestic wastewaters readily undergoes decomposition to ammonia in either aerobic or anaerobic conditions. In an aerobic environment, a select group of bacteria oxidize ammonia to nitrite and ultimately nitrate. Nitrates may be reduced by a variety of organisms to various nitrogen gas under anaerobic conditions. Depending upon the treatment objectives, one or several of these processes may be employed to achieve the desired end product.

a. Applicability

A number of biological processes for nitrogen conversion are applicable to onsite treatment. Domestic wastewater characteristics should not limit application of these processes, provided the nitrogen is in the appropriate form for conversion. Since biological processes are temperature-sensitive, such systems should be covered and insulated in cold climates. Covering also contains odors, should problems occur.

b. Process Performance

Although data are sketchy, about 2 to 10% of the total nitrogen from the home may be removed in the septic tank with septage (63)(64). Approximately 65 to 75% of the total nitrogen in septic tank effluents is in the ammonia-nitrogen form, indicating a significant level of decomposition of organic nitrogen (2).

Nitrification of septic tank effluents occurs readily within intermittent sand filters (see Section 6.3). Field experience indicates that intermittent sand filters loaded up to 5 gpd/ft^2 (0.02 cm^3/m^2/d), and properly maintained to avoid excessive ponding (and concomitant anaerobic conditions), converts up to 99% of the influent ammonia to nitrate-nitrogen (2). Aerobic biological package plants also provide a high degree of nitrification, provided solids retention times are long and sufficient oxygen is available (see Section 6.6).

The biological denitrification (nitrates to nitrogen gases) of wastewater follows a nitrification step (61). There has been little experience with long-term field performance of onsite denitrification processes. Ideally, total nitrogen removal in excess of 90% should be achievable, if the system is properly operated and maintained (61).

c. Design and Construction Features

Septic Tanks: There are no septic tank design requirements specifically established to enhance high levels of nitrogen removal. Designs that provide excellent solid-liquid separation ensure lower concentrations of nitrogen associated with suspended solids.

Nitrification: Biological nitrification is achieved by a select group of aerobic microorganisms referred to as nitrifiers (61). These organisms are relatively slow-growing and more sensitive to environmental conditions than the broad range of microorganisms found in biological wastewater treatment processes. The rate of growth of nitrifiers (and thus the rate of nitrification) is dependent upon a number of parameters, including temperature, dissolved oxygen, pH, and certain toxicants. The design and operating parameter used to reflect the growth rates of nitrifiers is the solids retention time (SRT). Details of the impact of temperature, dissolved oxygen, pH, and toxicants on design SRT values for nitrification systems are outlined in reference (61). In brief, biological nitrification systems are designed with SRT values in excess of 10 days; dissolved oxygen concentrations should be in excess of 2.0 mg/l; and pH values should range between 6.5 and 8.5. Toxicants known to be troublesome are discussed in reference (61).

Details of the design and construction of intermittent sand filters and aerobic package plants are found in Sections 6.3 and 6.4. In general, designs normally employed for onsite application of these processes to remove BOD and solids are sufficient to encourage nitrification as well.

Denitrification: Biological denitrification is carried out under anoxic conditions in the presence of facultative, heterotrophic microorganisms

which convert nitrate to nitrogen gases (61). Numerous microorganisms are capable of carrying out this process, provided there is an organic carbon source available. These organisms are less sensitive to environmental conditions than the nitrifiers, but the process is temperature-dependent. Process design and operational details for conventional denitrification processes are discussed in reference (61).

Design and operational experience with onsite biological denitrification systems is limited at this time (2)(65)(66). Several systems have been suggested for onsite application, two of which are shown in Figure 6-18. One employs a packed bed containing approximately 3/8-in. (1-cm) stone that receives, on a batch basis, effluent from a nitrification process. The nitrified wastewater flows to a dosing tank, where it is held until a predetermined volume is obtained. Methanol (or other organic carbon source) is then added to provide a C:N ratio of approximately 3:1. After approximately 15 min, the wastewater is pumped up through the anoxic packed stone bed. Effluent flows from the top of the bed. Liquid retention times in the packed bed (based on void volume) varying from 12 to 24 hours have been employed with good results (2). Pumping may be provided by a 1/3-hp submersible pump actuated by a switch float within the sump. A small chemical feed pump controlled by a timer switch may be used to feed the organic carbon source to the sump. A 30% methanol solution may be used as the carbon source. Other organic carbon sources include septic tank effluent, graywater, and molasses. Metering of organic carbon source to the nitrified wastewater requires substantial control to ensure a proper C:N ratio. Insufficient carbon results in decreased denitrification rates, whereas excess carbon contributes to the final effluent BOD (61). The use of an easily obtainable, slowly decomposable, solid carbon source could also be considered. Peat, forest litter, straw, and paper mill sludges, for example, could be incorporated as a portion of the upflow filter. Control of the denitrification process using these solid carbon sources would be difficult.

Another onsite nitrification-denitrification system that has been field tested employs a soil leach field (66) (Figure 6-18). Septic tank effluent is distributed to a standard soil absorption field. An impermeable shield of fiberglass is placed approximately 5 ft (1.5 m) below the distribution line. The location of this collector should be deep enough to ensure complete nitrification within the overlying unsaturated soil. The nitrified wastewater is collected on the sloped fiberglass shield, and directed to a 24-in. (61-cm) deep bed of pea gravel contained within a plastic liner (denitrifying reactor). The gravel bed is sized deep enough to provide a hydraulic detention time of approximately 10 days (based on void volume). Methanol or other energy source is metered to the gravel bed through a series of distributors. The gravel bed is vented with vertical pipes to allow escape of nitrogen gas evolved in the process. Short-term experience with this system has been good. Total nitrogen concentrations of less than 1 mg/l-N were achievable in

FIGURE 6-18

ONSITE DENITRIFICATION SYSTEMS

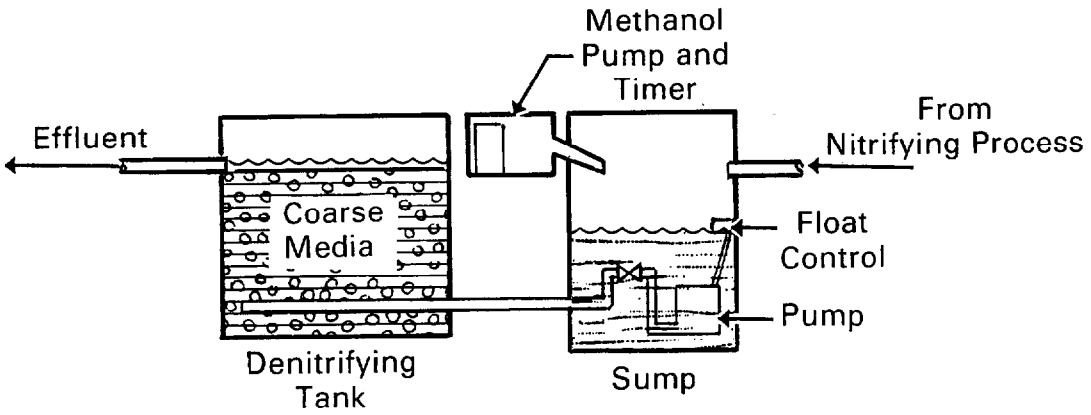

Batch Denitrification

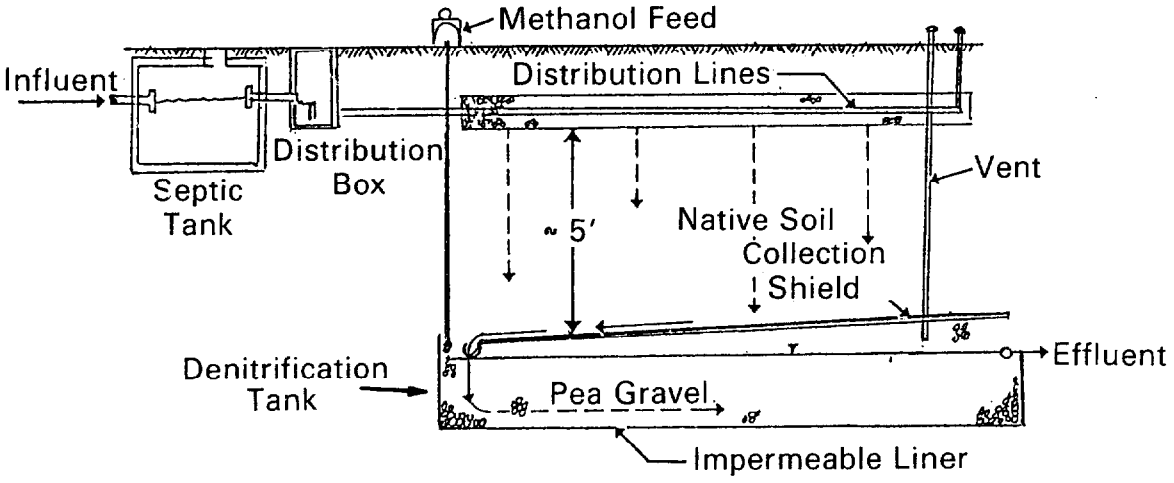

Nitrification-Denitrification in Soil

effluent samples during summer months. Higher values (5-10 mg/l-N) were observed during the colder winter months.

Although no studies have been reported in the literature for onsite applications, intermittent or cycled extended aeration processes are potentially promising (61)(67) for the nitrification-denitrification of wastewater. This process makes use of existing proprietary extended aeration package plants where aeration is cycled to provide both aerobic and anoxic environments. In this mode of operation, sufficient solids retention time (SRT) is provided to insure nitrification, and a sufficient period of anoxic holding is provided to insure denitrification. The biomass serves as the energy source for denitrification. The cycle times vary dependent on temperature and wastewater characteristics. A typical cycle, using a SRT of 20 days, aerates 180 min and holds anoxic for 90 min (67). Nitrogen removals in excess of 50% are attainable with this system (2)(67). Operation of the cyclic aeration system requires substantial supervision for a period of time until proper sequences have been selected.

d. Operation and Maintenance

Nitrification Systems: Operation and maintenance requirements to achieve nitrification in either intermittent sand filters or aerobic package units are not significantly different from those discussed in Sections 6.3 and 6.4. In both systems, the process must be maintained in an aerobic condition at all times to ensure effective nitrification.

Denitrification Systems: Operation and maintenance requirements for denitrification systems are normally complex and require semi-skilled labor for proper performance. In addition to routine maintenance of pumping systems, mixers, and timer controls, the addition and balance of a carbon source is required.

Routine analyses of nitrogen compounds and biological solids is also important. Rough estimates for semi-skilled labor for maintenance of an onsite denitrification system varies from 15 to 30 man-hr per yr. If methanol is used as a carbon source, it is estimated that from 33 to 55 lb/yr (15 to 25 kg/yr) are required for a family of four. Power requirements for methanol feed and pumping are about 15 to 25 kWh/yr.

6.6.2.4 Ion Exchange

Ion exchange is a process whereby ions of a given species are displaced from an insoluble exchange material by ions of a different species in

solution. It can be used to remove either ammonium or nitrate nitrogen from wastewaters. This process has been employed in full-scale water and wastewater treatment plants for several years (61)(67)(68), but there is no long-term experience with the process for nitrogen removal in onsite applications.

Nitrogen removal by ion exchange has potential for onsite application, since it is very effective and is simple to operate. Unfortunately, periodic replacement of the exchange media is expensive and regeneration of the media onsite does not appear to be practical at this time. Site conditions and climatological factors should not limit its application.

a. Ammonia Removal

Ammonia removal may be achieved by employing the naturally occurring exchange media, clinoptilolite, which has a high affinity for the ammonium ion (61). Laboratory experience has shown that packed columns of clinoptilolite resin (20 x 40 mesh) will effectively remove ammonium ion from septic tank effluent without serious clogging problems (2). Regeneration with 5% NaCl was successful over numerous trials. Breakthrough exchange capacity of this resin was found to be about 0.4 meq NH_4^+/gram in hard water at application rates of 10 bed volumes per hr. (This value will vary, increasing with decreased hardness.) Very large quantities of resin are required to treat household wastewaters (approximately 10 lb per day). Treatment of segregated graywaters substantially lower in ammonium concentration decreases the amount of resin needed.

This process employs a packed column or bed of the exchange resin following a septic tank. The waste is pumped from a sump to the column in an upflow or downflow mode on a periodic basis. Once the resin has been exhausted, it is removed and replaced by fresh material. Regeneration occurs offsite.

Operation and maintenance of this process requires routine maintenance of the pump and occasional monitoring of ammonium levels from the process. Replacement of exhausted resin is dictated by wastewater characteristics and bed volume. There are insufficient data at this time to delineate labor, power, and resin requirements.

b. Nitrate Removal

Nitrate removal from water may be achieved by the use of strong and weak base ion exchange resins (68)(69). There are very little data available

on long-term performance of these nitrate removal systems for wastewater. Numerous anions in water compete with nitrate for sites on these resins; therefore, tests on the specific wastewater to be treated need to be performed.

This process has potential for onsite application, where it would follow a nitrification process such as intermittent sand filters. As with ammonia resins, regeneration is performed off site.

There is insufficient information on nitrate exchange to provide design, construction, operation, and maintenance data at this time.

6.6.3 Phosphorus Removal

6.6.3.1 Description

Table 6-27 outlines the most likely treatment processes available for onsite removal of phosphorus in wastewater. In many instances, these processes will also achieve other treatment objectives as well, and must be evaluated as to their overall performance.

6.6.3.2 In-House Processes

Review of Chapter 4 indicates that the major sources of phosphorus in the home are laundry, dishwashing, and toilet wastewaters. Contributions of phosphorus in the home could be reduced from approximately 4 to 2 gm/cap/day through the use of 0.5% phosphate detergents.

Segregation of toilet wastewaters (blackwater) from household wastewaters reduces phosphorus levels to approximately 2.8 gm/cap/day in the graywater stream. Chapter 4 describes the process features, performance, and operation and maintenance of low-water carriage and waterless toilet systems that would be employed for this segregation. Note that the resultant residues from these toilet systems must be considered in this treatment strategy. A discussion of residuals disposal appears in Chapter 9.

As with any in-house measure to reduce pollutional loads, the success of the process is dependent upon owner commitment and appropriate management of the alternative plumbing equipment.

TABLE 6-27

POTENTIAL ONSITE PHOSPHORUS REMOVAL OPTIONS

Option	Description	Effectiveness	Comments	Onsite Technology Status
In-House Segregation	Laundry detergent substitution	50% P removal	0.5% P detergents available	Excellent
	Separate toilet wastes from other wastewaters	20-40% P removal	Management of residues required; achieves significant BOD, SS reduction	Good
Chemical Precipitation: Iron, Calcium and Aluminum Salts	Dosing prior to or following septic tanks	Up to 90% P removal	Increases quantity of sludge; labor intensive	Fair
Sorption Processes: Calcite or Iron	Beds or columns	Up to 90% P removal	Replacement required	Tentative
Alumina	Beds or columns	90-99% P removal	High cost for material, labor intensive	Tentative

6.6.3.3 Chemical Precipitation

Phosphorus in wastewater may be rendered insoluble by a selected number of metal salts, including aluminum, calcium, and iron (62). Although the reactions are complex, the net result is the precipitation of an insoluble complex that contains phosphate. Phosphorus precipitation methods normally include the addition of the chemical, high-speed mixing, and slow agitation followed by sedimentation.

There has been little long-term experience with phosphorus removal of wastewaters onsite (2)(70). Precipitation of phosphates is less easily accomplished for polyphosphates and organic phosphorus than for orthophosphate. Therefore, precipitation within the septic tanks, although simpler to manage, may not remove a significant portion of the phosphate, which is in the poly and organic form. Substantial hydrolysis of these forms may occur in the septic tank, however, producing the orthoform. Thus, precipitation following the septic tank may achieve higher overall removals of total phosphorus.

Performance is dependent on the point of chemical addition, chemical dosage, wastewater characteristics, and coagulation and sedimentation facilities. Dose-performance relationships must be obtained through experimentation, but one should expect phosphorus removals between 75 and 90%. Improvement in this performance may be achieved if intermittent sand filters follow the precipitation/sedimentation process. Side benefits are achieved with the addition of the precipitating chemicals. Suspended and colloidal BOD and solids will be carried down with the precipitate, producing a higher quality effluent than would otherwise be expected.

Chemical precipitation of wastewaters generates more sludge than do conventional systems due to both the insoluble end product of the added chemical and the excess suspended and colloidal matter carried down with it. Estimates of this increased quantity are very crude at this time, but may range from 200 to 300% by weight in excess of the sludge normally produced from a septic tank system.

a. Process Features

The chemicals most often used for phosphate precipitation are aluminum and iron compounds. Calcium salts may also be used, but require pH adjustment prior to final discharge to the environment. Aluminum is generally added as alum ($Al_2SO_4 \cdot n\ H_2O$). Ferric chloride and ferric sulfate are the most commonly used iron salts.

Anionic polyelectrolytes can be used in combination with the aluminum and iron salts to improve settling, but may overly complicate the onsite treatment system.

The required dosages of aluminum and iron compounds are generally reported as molar ratios of trivalent metal salt to phosphate phosphorus. Molar ratios currently used in practice today range from 1.5:1 to 4:1, depending upon wastewater characteristics, point of addition, and desired phosphorus removal (20)(62).

Adding aluminum or iron salts to the raw wastewater prior to the septic tank has the advantage of using the existing septic tank for sedimentation (70). Aluminum or iron salts may be metered to the raw wastewater with a chemical feed pump activated by electrical or mechanical impulse. Mixing of the chemical with the wastewater is provided in the sewer line to the septic tank. The quantity of metal salt added to the wastewater is dependent upon wastewater characteristics. Since the impulse to the feed pump may come from any of a number of household events, it is not possible to precisely adjust metal dosage. An average dose of salt based on estimated phosphorus discharge is most practical.

Addition of iron or aluminum salts following the septic tank may also be considered. A batch feed system could be employed whereby a preset chemical dose is provided when the wastewater reaches a preset volume in a holding tank. Mixing may be provided by aeration or mechanical mixer, followed by a period of quiescence. Additional raw wastewater flow would be diverted to a holding tank until the precipitation-sedimentation cycle is completed. This system may be employed after the septic tank and preceding the intermittent sand filter.

The processes briefly described above represent a few of the many chemical treatment processes that might be considered for onsite treatment. They may be designed and constructed to fit the specific needs of the site, or purchased as a proprietary device. Storage and holding of chemicals must be considered in the design of these systems. Details on chemical storage, feeding, piping, and control systems may be found elsewhere (20)(62). Attention must be given to appropriate materials selection, since many of the metal salts employed are corrosive in liquid form.

b. Operation and Maintenance

Every effort should be made to select equipment that is easily operated and maintained. Nonetheless, chemical precipitation systems require semi-skilled labor to maintain chemical feed equipment, mixers, pumps,

and electronic or mechanical controls. More frequent pumping of wastewater sludge or septage is also required. A rough estimate for semi-skilled labor is 10 to 25 man-hr per yr depending upon the complexity of the equipment. Conservative estimates on sludge accumulation dictate sludge or septage pumping every 0.5 to 2 years for an average home. Chemical requirements would vary widely, but are estimated to range from 22 to 66 lb/yr Al (10 to 30 kg/yr) or 11 to 33 lb/yr Fe (5 to 15 kg/yr) for a family of four.

6.6.3.4 Surface Chemical Processes

Surface chemical processes, which include ion exchange, sorption, and crystal growth reactions, have received little application in treatment of municipal wastewaters, but hold promise for onsite application (62). These types of processes are easy to control and operate; the effluent quality is not influenced by fluctuations in influent concentration; and periods of disuse between applications should not affect subsequent performance. Phosphorus removal on selected anion exchange resins has been demonstrated, but control of the process due to sulfate competition for resin sites has discouraged its application (71). Phosphorus removal by sorption in columns or beds of calcite or other high-calcium, iron, or aluminum minerals is feasible; but long-term experience with these materials has been lacking (2)(25)(72). Many of these naturally occurring materials have limited capacity to remove phosphorus, and some investigations have demonstrated the development of biological slimes that reduce the capacity of the mineral to adsorb phosphorus. Table 6-28 lists a range of phosphorus adsorption capacities of several materials that may be considered. The use of locally available calcium, iron, or aluminum as naturally occurring materials, or as wastewater products from industrial processing, may prove to be cost-effective; but transport of these materials any distance normally rules out their widespread application. Incorporation of phosphate-sorbing materials within intermittent sand filters is discussed more fully in Section 6.3.5.

The use of alumina (Al_2O_3), a plentiful and naturally occurring material for sorption of phosphorus, has been demonstrated in laboratory studies, but has not yet been employed in long-term field tests (75). Alumina has a high affinity for phosphorus, and may be regenerated with sodium hydroxide. Application of an alumina sorption process is similar to ion exchange, whereby a column or bed would be serviced by replacement on a routine basis. Costs for this process are high.

6.7 Wastewater Segregation and Recycle Systems

Chapter 5 discusses in detail in-house methods that may be employed to modify the quality of the wastewater. These processes are an important

component of the onsite treatment system as they remove significant quantities of pollutants from the wastewater prior to further treatment and/or disposal.

TABLE 6-28

PHOSPHORUS ADSORPTION ESTIMATES FOR SELECTED NATURAL MATERIALS (73)(74)(75)[a]

Media	Adsorption (mg P/100 gm media)
Acid Soil Outwash	10 - 35
Calcereous Soil Outwash	5 - 30
Sandy Soils	2 - 20
F-1 Alumina (Al_2O_3), 24-48 mesh	700 - 1500

[a] Based on maximum Langmuir isotherm values.

6.7.1 Wastewater Segregation

Among the wastewater segregation components which significantly alter wastewater quality are the non-water carriage toilets (Table 5-3), and the very low water flush toilets (Table 5-2) with blackwater containment. Impacts of wastewater modification on onsite disposal practices are outlined in Table 5-9.

The graywater resulting from toilet segregation practices normally require some treatment prior to disposal (Tables 4-4 and 4-5 - "Basins, Sinks, and Appliances"). Treatment methods for graywater are similar to those employed for household wastewaters (Sections 6.2 to 6.6 and Figure 5-2), but performance data are lacking.

Residuals resulting from the treatment or holding of segregated waste streams must be considered when evaluating these alternatives. Details of the characterization and disposal of these residuals appear in Chapter 9.

6.7.2 Wastewater Recycle

In-house wastewater recycle systems are treatment systems employed to remove specific pollutants from one or more wastewater streams in order to meet a specific water use objective (for example, graywater may be treated to a quality that is acceptable for flushing toilets, watering lawns, etc.). These systems are summarized in Table 5-6.

The impact of recycle systems on the quality of wastewater to be ultimately disposed is difficult to assess at this time owing to the absense of long term experience with these systems. It is likely that substantial pollutant mass reduction will occur in addition to flow reduction. As with segregated systems, the disposal of residuals from these processes must be considered in system evaluation.

6.8 References

1. Jones, E. E. Septic Tank - Configuration versus Performance. Presented at the 2nd Pacific Northwest On-Site Wastewater Disposal Short Course, University of Washington, Seattle, March 1978.

2. Small Scale Waste Management Project, University of Wisconsin, Madison. Management of Small Waste Flows. EPA 600/2-78-173, NTIS Report No. PB 286 560, September 1978. 804 pp.

3. Weibel, S. R., C. P. Straub, and J. R. Thoman. Studies on Household Sewage Disposal Systems, Part I. NTIS Report No. PB 217 671, Environmental Health Center, Cincinnati, Ohio, 1949. 279 pp.

4. Salvato, J. A. Experience with Subsurface Sand Filters. Sewage and Industrial Wastes, 27(8):909, 1955.

5. Bernhart, A. P. Wastewater from Homes. University of Toronto, Toronto, Canada, 1967.

6. Laak, R. Wastewater Disposal Systems in Unsewered Areas. Final Report to Connecticut Research Commission, Civil Engineering Department, University of Connecticut, Storrs, 1973.

7. Brandes, M. Characteristics of Effluents from Separate Septic Tanks Treating Gray and Black Waters from the Same House. J. Water Pollut. Control Fed., 50:2547-2559, 1978.

8. Weibel, S. R., T. W. Bendixen, and J. B. Coulter. Studies on Household Sewage Disposal Systems, Part III. NTIS Report No. PB 217 415, Environmental Health Center, Cincinnati, Ohio, 1954. 150 pp.

9. Plews, G. D. The Adequacy and Uniformity of Regulations for On-Site Wastewater Disposal - A State Viewpoint. In: National Conference on Less Costly Wastewater Treatment Systems for Small Communities. EPA 600/9-79-010, NTIS Report No. PB 293 254, April 1977. pp. 20-28.

10. Manual of Septic Tank Practices. NTIS Report No. PB 216 240, Public Health Service, Washington, D.C., 1967. 92 pp.

11. Baumann, E. R., E. E. Jones, W. M. Jakubowski, and M. C. Nottingham. Septic Tanks. In: Proceedings of the Second National Home Sewage Treatment Symposium, Chicago, Illinois, December 1977. American Society of Agricultural Engineers, St. Joseph, Michigan, 1978. pp. 38-53.

12. Weibel, S. R. Septic Tanks: Studies and Performance. Agric. Eng., 36:188-191, 1955.

13. Harris, S. E., J. H. Reynolds, D. W. Hill, D. S. Filip, and E. J. Middlebrooks. Intermittent Sand Filtration for Upgrading Waste Stabilization Pond Effluents. J. Water Pollut. Control Fed. 49:83-102, 1977.

14. Schwartz, W. A., T. W. Bendixen, and R. E. Thomas. Project Report of Pilot Studies on the Use of Soils as Waste Treatment Media; In-house Report. Federal Water Pollution Control Agency, Cincinnati, Ohio, 1967.

15. Metcalf, L., and H. P. Eddy. American Sewerage Practice. 3rd ed., Volume III. McGraw-Hill, New York, 1935. 892 pp.

16. Boyce, E. Intermittent Sand Filters for Sewage. Munic. Cty. Eng., 72:177-179, 1927.

17. Recommended Standards for Sewage Works. Great Lakes-Upper Mississippi River Board of State Sanitary Engineers, Albany, New York, 1960. 138 pp.

18. Filtering Materials for Sewage Treatment Plants. Manual of Engineering Practice No. 13, American Society of Civil Engineers, New York, 1937. 40 pp.

19. Salvato, J. A., Jr. Experience With Subsurface Sand Filters. Sew. Ind. Wastes, 27:909-916, 1955.

20. Wastewater Treatment Plant Design. Manual of Practice No. 8, Water Pollution Control Federation, Washington, D.C., 1977. 560 p.

21. Clark, H. W. and S. Gage. A Review of Twenty-One Years of Experiments upon the Purification of Sewage at the Lawrence Experimental Station. 40th Annual Report, State Board of Health of Massachusetts, Wright E. Potter, Boston, Massachusetts, 1909. 291 pp.

22. Brandes, M. Effect of Precipitation and Evapotranspiration on Filtering Efficiency of Wastewater Disposal Systems. Publication No. W70, Ontario Ministry of Environment, Toronto, Canada, May 1970.

23. Emerson, D. L., Jr. Studies on Intermittent Sand Filtration of Sewage. Florida Engineering and Industrial Experimental Station Bulletin No. 9, University of Florida College of Engineering, Gainesville, 1954.

24. Hines, J., and R. E. Favreau. Recirculating Sand Filter: An Alternative to Traditional Sewage Absorption Systems. In: Proceedings of the National Home Sewage Disposal Symposium, Chicago, Illinois, December 1974. American Society of Agricultural Engineers, St. Joseph, Michigan, 1975. pp. 130-136.

25. Brandes, M., N. A. Chowdhry, and W. W. Cheng. Experimental Study on Removal of Pollutants From Domestic Sewage by Underdrained Soil Filters. In: Proceedings of the National Home Sewage Disposal Symposium, Chicago, Illinois, December 1974. American Society of Agricultural Engineers, St. Joseph, Michigan, 1975. pp. 29-36.

26. Teske, M. G. Recirculation - An Old Established Concept Solves Same Old Established Problems. Presented at the 51st Annual Conference of the Water Pollution Control Federation, Anaheim, California, 1978.

27. Bowne, W. C. Experience in Oregon With the Hines-Favreau Recirculating Sand Filter. Presented at the Northwest States Conference on Onsite Sewage Disposal, 1977.

28. Chowdhry, N. A. Underdrained Filter Systems - Whitby Experiment Station. Ministry of the Environment Interim Report Part 2. Toronto, Canada, 1973.

29. Kennedy, J. C. Performance of Anaerobic Filters and Septic Tanks Applied to the Treatment of Residential Wastewater. M.S. Thesis, University of Washington, Seattle, 1979.

30. Bernhart, A. P. Wastewater From Homes. University of Toronto, Toronto, Canada, 1967.

31. Voell, A. T. and R. A. Vance. Home Aerobic Wastewater Treatment Systems - Experience in a Rural County. Presented at the Ohio Home Sewage Disposal Conference, Ohio State University, Columbus, 1974.

32. Tipton, D. W. Experiences of a County Health Department with Individual Aerobic Sewage Treatment Systems. Jefferson County Health Department, Lakewood, Colorado, 1975.

33. Brewer, W. S., J. Lucas, And G. Prascak. An Evaluation of the Performance of Household Aerobic Sewage Treatment Units. Journal of Environmental Health, 41:82-85, 1978.

34. Glasser, M. B. Garrett County Home Aeration Wastewater Treatment Project. Bureau of Sanitary Engineering, Maryland State Department of Health and Mental Hygiene, Baltimore, 1974.

35. Hutzler, N. J., L. E. Waldorf, and J. Fancy. Performance of Aerobic Treatment Units. In: Proceedings of the Second National Home Sewage Treatment Symposium, Chicago, Illinois, December 1977. American Society of Agricultural Engineers, St. Joseph, Michigan, 1978. pp. 149-163.

36. Operation of Wastewater Treatment Plants. Manual of Practice No. 11, Water Pollution Control Federation, Washington, D.C., 1976. 547 pp.

37. Tsugita, R. A., D. C. W. Decoite, and L. Russell. Process Control Manual for Aerobic Biological Wastewater Treatment Facilities. EPA 430/9-77-006, NTIS Report No. PB 279 474, James M. Montgomery Inc., 1977. 335 pp.

38. Process Design Manual, Wastewater Treatment Facilities for Sewered Small Communities. EPA-625/1-77-009, U.S. Environmental Protection Agency, Cincinnati, Ohio, 1977.

39. Craun, C. F. Waterborne Disease - A Status Report Emphasizing Outbreaks in Ground Water Systems. Ground Water, 17:183-191, 1979.

40. Craun, C. F. Disease Outbreaks Caused by Drinking Water. J. Water Pollut. Control Fed., 50:1362-1375, 1978.

41. Jakubowski, W., and J. C. Hoff, eds. Waterborne Transmission of Giardiasis. EPA 600/9-79-001, NTIS Report No. PB 299 265, U. S. Environmental Protection Agency, Health Effects Research Laboratory, Cincinnati, Ohio, June 1979. 306 pp.

42. Berg, G., ed. Transmission of Viruses by the Water Route. Wiley, New York, 1967. 502 pp.

43. Chang, S. L. Modern Concept of Disinfection. J. Sanit. Eng. Div., Am. Soc. Civil Eng., 97:689-707, 1971.

44. White, G. C. Handbook of Chlorination. Van Nostrand Reinhold, New York, 1972. 751 pp.

45. Morris, J. C. Chlorination and Disinfection: State of the Art. J. Am. Water Works Assoc., 63:769-774, 1971.

46. McKee, J. E. Report on the Disinfection of Seattle Sewerage. California Institute of Technology, Pasadena, California, April 1957.

47. Budde, P. E., P. Nehm, and W. C. Boyle. Alternatives to Wastewater Disinfection. J. Water Pollut. Control Fed., 49:2144-2156, 1977.

48. Black, A. P. Better Tools for Treatment. J. Am. Water Works Assoc., 58:137-146, 1966.

49. Baker, R. J. Characteristics of Chlorine Compounds. J. Water Pollut. Control Fed., 41:482-485, 1969.

50. Jepson, J. D. Disinfection of Water Supplies by Ultraviolet Irradiation. Water Treat. Exam., 22:175-193, 1973.

51. Huff, C. B., H. F. Smith, W. D. Boring, and N. A. Clarke. Study of Ultraviolet Disinfection of Water and Factors in Treatment Efficiency. Pub. Health Rep., 80:695,705, 1965.

52. Scheible, O. K., G. Binkowski, and T. J. Mulligan. Full Scale Evaluation of Ultraviolet Disinfection of a Secondary Effluent. In: Progress in Wastewater Disinfection Technology, EPA 600/9-79-018, NTIS Report No. PB 299 338, Municipal Environmental Research Laboratoty, Cincinnati, Ohio, 1979. pp. 117-125.

53. Kreissl, J. F., and J. M. Cohen. Treatment Capability of a Physical Chemical Package Plant. Water Res., 7:895-909, 1973.

54. Rosen, H. M. Ozone Generation and Its Economical Application in Wastewater Treatment. Water Sew. Works, 119:114-120, 1972.

55. Johansen, R. P., and D. W. Terry. Comparison of Air and Oxygen Recycle Ozonation Systems. Presented at the Symposium on Advanced Ozone Technology, Toronto, Canada, November 1977.

56. Majumdar, S. B., and O. J. Sproul. Technical and Economic Aspects of Water and Wastewater Ozonation: A Critical Review. Water Res., 8:253-260, 1974.

57. McCarthy, J. J., and C. H. Smith. A Review of Ozone and Its Application to Domestic Wastewater Treatment. J. Am. Water Works Assoc., 66:718-725, 1974.

58. Poynter, S. F., J. S. Slade, and H. H. Jones. The Disinfection of Water with Special Reference to Viruses. Water Treat. Exam., 22:194-208, 1973.

59. Scaccia, C., and H. M. Rosen. Ozone Contacting: What is the Answer? Presented at the Symposium on Advanced Ozone Technology, International Ozone Institute, Toronto, Canada, November 1977.

60. Venosa, A. D., M. C. Meckes, E. J. Opatken, and J. W. Evans. Comparative Efficiencies of Ozone Utilization and Microorganism Reduction in Different Ozone Contactors. In: Progress in Wastewater Disinfection Technology, EPA 600/9-79-018, NTIS Report No. PB 299 338, MERL, Cincinnati, Ohio, 1979. pp. 141-161.

61. Process Design Manual for Nitrogen Control. EPA 625/1-75-007, United States Environmental Protection Agency, Center for Environmental Research Information, Cincinnati, Ohio, October 1975. 434 pp.

62. Process Design Manual for Phosphorus Removal. EPA 625/1-76-001, United States Environmental Protection Agency, Center for Environmental Research Information, Cincinnati, Ohio, April 1976.

63. Brandes, M. Accumulation Rate and Characteristics of Septic Tank Sludge and Septage. J. Water Pollut. Control Fed., 50:936-943, 1978.

64. Laak, R., and F. J. Crates. Sewage Treatment by Septic Tank. In: Proceedings of the Second Home Sewage Treatment Symposium, Chicago, Illinois, December 1977. American Society of Agricultural Engineers, St. Joseph, Michigan, 1978. pp. 54-60.

65. Sikora, L. J., and D. R. Keeney. Laboratory Studies on Stimulation of Biological Denitrification. In: Proceedings of the National Home Sewage Disposal Symposium, Chicago, Illinois, December 1975, American Society of Agricultural Engineers, St. Joseph, Michigan, 1975. pp. 64-73.

66. Andreoli, A., N. Bartilucci, R. Forgione, and R. Reynolds. Nitrogen Demand in a Subsurface Disposal System. J. Water Pollut. Control Fed., 51:841-854, 1979.

67. Goronszy, M. C. Intermittent Operation of the Extended Aeration Process for Small Systems. J. Water Pollut. Control Fed., 51:274, 1979.

68. Clifford, D. A., and W. J. Weber, Jr. Multicomponent Ion Exchange: Nitrate Removal Process with Land Disposal Regenerant. Ind. Water Eng., 15:18-26, 1978.

69. Beulow, R. W., K. L. Kropp, J. Withered, and J. M. Symons. Nitrate Removal by Anion Exchange Resins. Water Supply Research Laboratory, National Environmental Research Center, Cincinnati, Ohio, 1974.

70. Brandes, M. Effective Phosphorus Removal by Adding Alum to Septic Tank. J. Water Pollut. Control Fed., 49:2285-2296, 1977.

71. Midkiff, W. S., and W. J. Weber, Jr. Operating Characteristics of Strong Based Anion Exchange Reactor. Proc. Ind. Waste Conf., 25:593-604, 1970.

72. Erickson, A. E., J. M. Tiedje, B. G. Ellis, and C. M. Hansen. A Barriered Landscape Water Renovation System for Removing Phosphate and Nitrogen from Liquid Feedlot Waste. In: Livestock Waste Management Pollution Abatement; Proceedings of the International Symposium on Livestock Wastes, St. Joseph, Michigan, 1971. pp. 232-234.

73. Ellis, B. G., and A. E. Erickson. Movement and Transformation of Various Phosphorus Compounds in Soils. Michigan Water Resources Commission, Lansing, 1969.

74. Tofflemire, T. J., M. Chen, F. E. Van Alstyne, L. J. Hetling, and D. B. Aulenbach. Phosphate Removal by Sands and Soils. Research Unit Technical Paper 31, New York State Department of Environmental Conservation, Albany, 1973. 92 pp.

75. Detweiler, J. C. Phosphorus Removal by Adsorption on Alumina as Applied to Small Scale Waste Treatment. M.S. Report. University of Wisconsin, Madison, 1978.