provides the temperature and residence environment to "burn out" any smoke generated from the deactivation/melt process.

After the deactivation segment of the batch has occurred, a valve located between the DEACTIVATION/MELT CHAMBERS opens to allow a flow path for the molten aluminum from the DEACTIVATION/MELT CHAMBERS to the MELT/HOLDING FURNACE. The molten aluminum will gravity flow from the DEACTIVATION/MELT CHAMBERS to the MELT/HOLDING FURNACE by way of the electrically heated and temperature controlled refractory lined TRANSFER TROUGH. The TRANSFER TROUGH SHUT-OFF VALVE is only open during the melt segment of the cycle.

Recirculated flue gas is controlled in temperature by use of a gas to gas HEAT EXCHANGER. This HEAT EXCHANGER uses ambient air to carry off unwanted heat from the recirculated flue gas. Excess flue gas exits the AFTER BURNER via breaching at the bottom. The AFTER BURNER is of a down fire configuration. That is, cool recirculation gas enters the top, flows downward in the chamber, and is heated by a downward firing natural gas fired burner. The cool recirculated flue gas inlet to the AFTER BURNER is tangential, thus causing the AFTER BURNER chamber to act like a cyclone to remove particulate.

Flow rate of excess gas out of the AFTER BURNER is by way of a monitored and controlled "draft" pressure at the outlet breaching from the AFTER BURNER. Under normal operating conditions excess flue gas will flow through breaching to the air pollution control train or Scrubber. However, in the advent of emergency conditions, a damper will open to emit the flue gas out of the EMERGENCY VENT/STACK. The EMERGENCY VENT/STACK is required to prevent catastrophic failure of the Scrubber in emergency conditions or extreme upset

conditions. A batch cycle can only be started if the Scrubber is on line and fully operational and with proof of closure of the EMERGENCY VENT/STACK.

Under preheat/startup conditions, when the furnaces are being fired on gas burners, flue gases may also be exhausted through the EMERGENCY VENT/STACK.

Referring to Drawing 1557, Sheet BF-2, molten aluminum flows from the DEACTIVATION/MELT CHAMBERS to the MELT/HOLDING FURNACE. The purpose of this furnace is twofold:

A. To provide a molten holding bath for collection of recovered aluminum and thence casting of the recovered aluminum into ingots for recycling.

B. Provide a sweat hearth to melt aluminum scrap off of specification aluminum ingots.

The MELT/HOLDING FURNACE has four burners mounted on it. One burner (burner "B") is automatically controlled to maintain the aluminum bath at a given set point temperature. The other burner (burner "A") is used to melt aluminum placed on the sweat hearth. It is an ON-OFF burner, which fires at full rating for a given time. Two auxiliary burners were added to the system after initial startup, providing additional heat to the melting operation.

During operation of this furnace, the pressure in the furnace is automatically controlled. If for any reason the door is opened on this furnace, the burners will go to low fire and the PRESSURE CONTROL DAMPER closes to maintain proper operation of the Scrubber.

The MELT/HOLDING FURNACE shares the EMERGENCY VENT/STACK with the DEACTIVATION/MELT FURNACE. The melt burner (burner "A") will be interlocked with the EMERGENCY VENT/STACK CONTROL DAMPER to inhibit its operation any time this damper is open.

Flue gases generated from the burners in the MELT/HOLDING FURNACE will be directed via refractory lined breaching to a connection point just before the Scrubber HEAT EXCHANGER; refer to Drawing 1557, Sheet BF-3.

Flue gases from both furnaces combine in a refractory lined breaching just before the Scrubber HEAT EXCHANGER. This device is a gas to gas heat exchanger, which uses ambient air to cool the flue gases to proper temperatures (in the 375°F to 450°F range) for processing in the Scrubber. The flue gas passes through the HEAT EXCHANGER and through the REAGENT CONTRACTOR, which mixes the reagent with the flue gases.

Initially, the reagent selected for addition to the flue gas is a filter aid by the trade name of Neutralite from Baghouse, Inc. This material will be metered into the flue gas by the REAGENT FEEDER at a minimum rate of 1% of the particulate loading in the flue gas stream. (Since the particulate loading rate is very small, a reagent feed rate of .1 to .5 pound/hour is recommended.) Neutralite is a reagent, which greatly improves the removal efficiencies of fine particulate in a baghouse. It would also be possible to use this feeder to introduce other reagents into the Scrubber system to treat for other specific flue gas components. (Such as sodium bicarbonate for acid gas treatment, powdered activated carbon for PNA [poly-nuclear aromatics] reduction, etc.)

The flue gases pass through the REAGENT CONTACTOR into the BAGHOUSE for removal of the particulate from the flue gas stream. The insulated

BAGHOUSE, of the pulsejet cleaning type, uses 16 ounce Teflon B coated fiberglass bags for removal of the particulate. The collected particulate falls from the bags during a cleaning cycle and collects in the bottom of the BAGHOUSE in the baghouse hopper. The baghouse hopper is also insulated and supplied with auxiliary heat panels to maintain satisfactory operating temperatures.

The baghouse hopper also has a VIBRATOR attached to it to help in flow of the collected dust out of the baghouse hopper into a stainless steel drum.

Please note it may be possible to recycle this material back to the REAGENT FEEDER several times before ultimate disposal of this material.

The flue gases pass through the BAGHOUSE and into the inlet suction side of the I.D. Fan via insulated ducting. Control of the flow rate of the flue gas is by means of the DRAFT CONTROL DAMPER which automatically adjusts the system draft (negative pressure) via a sensor located on the AFTER BURNER outlet breaching. The control is by means of a microprocessor based PID loop controller and a motorized multi-bladed damper.

The I.D. FAN is the prime mover for the Scrubber system. It supplies the mechanical energy to pull the flue gases out of the AFTER BURNER and the MELT/HOLDING FURNACE and through the other Scrubber equipment and push them out the STACK for proper dispersion to the atmosphere.

The I.D. FAN is of a heavy-duty industrial design, insulated, type "P" radial wheel. It is designed in the arrangement 8 or 9 configuration (integral motor/base combination) with a TEFC chemical duty motor.

The flue gases exit the Scrubber via an insulated STACK. The STACK will be designed to provide flue gas velocities of approximately 3,000 feet/minute. The STACK will be provided with a set of test ports and stack test platform to meet EPA Method 5 requirements.

Controls for the system will be located in a control panel in the Control Room. Controls will be housed in a NEMA-12 panel and be rated NEMA-12 or NEMA-4. All modulated control loops will be by way of a TI-PLC. Overall sequencing will be by means of the same PLC and hard-wired relays. One 100mm wide strip chart recorder will be provided in the control panel for a total of 6 channels (11 channels assigned) of hard recording of process information. Operator interface with the PLC will be by means of a CRT display with keyboard and mouse.

All motor starters and heater contactors will be housed in a separate NEMA-12 panel. All starters/contactors will be of the bucket design, fusible disconnect, melting overload type.

Drawing 1557, Sheet SEQ-1 provides an Operational Sequence Diagram for the operation of the system.

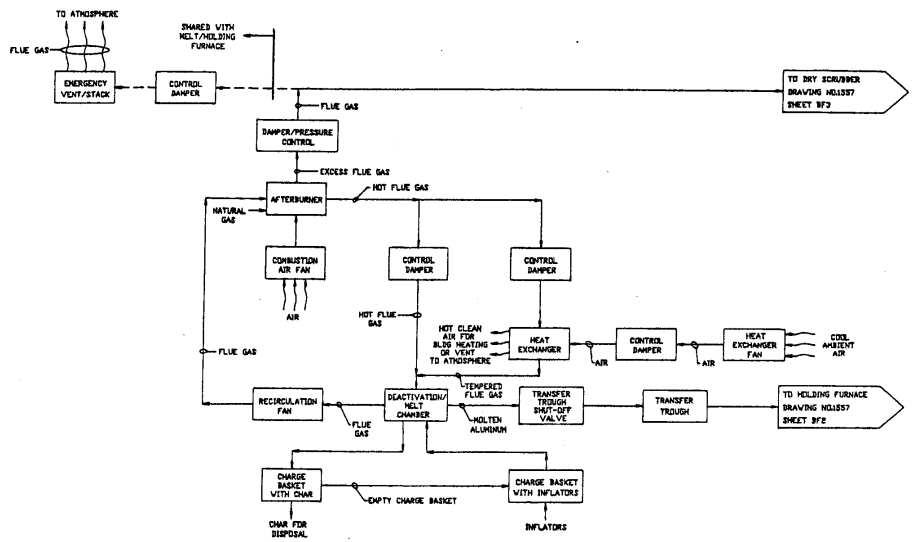

REV	DATE	DESCRIPTION

This document is the work of Gillespie & Powers, Inc. and is strictly confidential, and is given with the understanding that neither it nor any information contained therein will be copied, published or transmitted to others.

	BY	DATE
DWG	AUTEN	5/4/94
CHK'D	CARVER	6/3/94
APPR'D		

GILLESPIE + POWERS, INC.
8550 TRUE DRIVE / ST. LOUIS, MO 63132
ENGINEERING & CONSTRUCTION

SCALE

TITLE
BLOCK FLOW DIAGRAM
FOR AN INFLATOR PROCESSING SYSTEM
DEACTIVATION/MELT FURNACE

PLANS & DETAILS PREPARED FOR
MORTON INTERNATIONAL
OGDEN, UTAH

DWG. NO. 1557
SHT. NO. BF-1

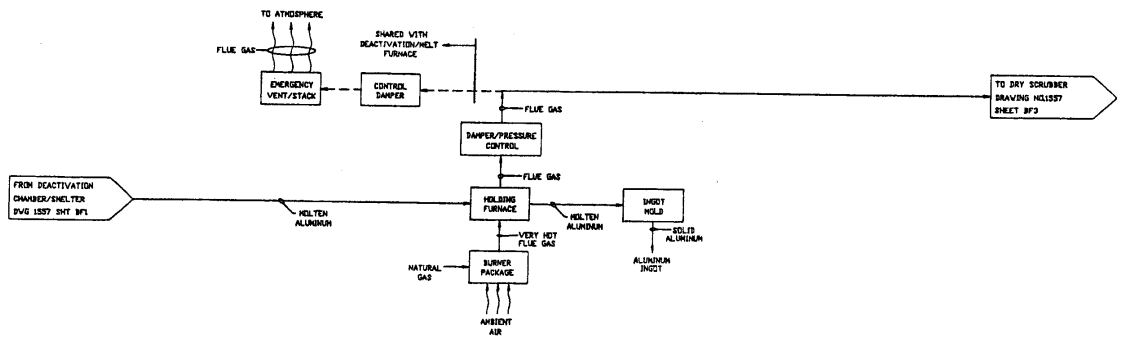

REV	DATE	DESCRIPTION

This document is the work of Gillespie & Powers, Inc. and is strictly confidential, and is given with the understanding that neither it nor any information contained therein will be copied, published or transmitted to others.

	BY	DATE
DWG	AUTEN	3/4/94
CHK'D	CARVER	6/3/94
APPR'D		

GILLESPIE + POWERS, INC.
9650 TRUE DRIVE / ST. LOUIS, MO 63132
ENGINEERING & CONSTRUCTION

SCALE: NONE

TITLE: BLOCK FLOW DIAGRAM FOR AN INFLATOR PROCESSING SYSTEM MOLTEN ALUMINUM MELT/HOLDING FURNACE

PLANS & DETAILS PREPARED FOR: MORTON INTERNATIONAL, OGDEN, UTAH

DWG. NO. 1557

SHT. NO. BF-2

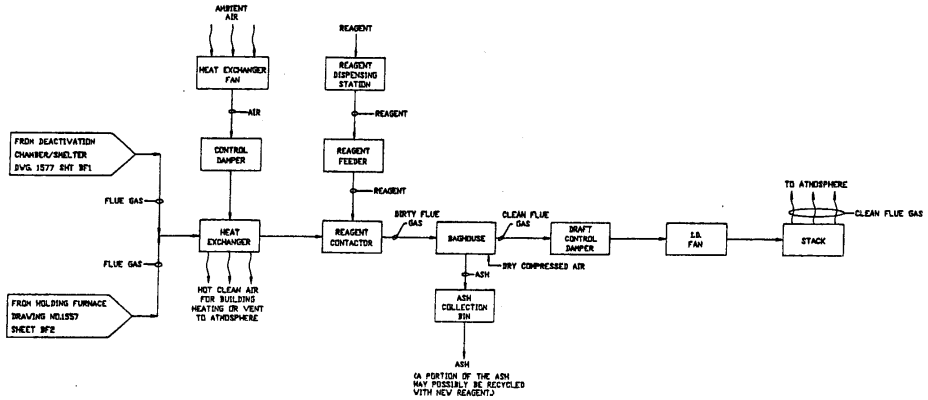

REV	DATE	DESCRIPTION

This document is the work of Gillespie & Powers, Inc. and is strictly confidential, and is given with the understanding that neither it nor any information contained therein will be copied, published or transmitted to others.

	BY	DATE
DWG	AUTEN	5/4/94
CHK'D	CARVER	6/3/94
APPR'D		

GILLESPIE + POWERS, INC.
9650 TRUE DRIVE / ST. LOUIS, MO 63132
ENGINEERING & CONSTRUCTION

SCALE

TITLE
BLOCK FLOW DIAGRAM
FOR AN INFLATOR PROCESSING SYSTEM
SCRUBBER

PLANS & DETAILS PREPARED FOR
MORTON INTERNATIONAL
OGDEN, UTAH

DWG. NO. 1557
SHT. NO. BF-3

INFLATOR PROCESSING SYSTEM OPERATING CYCLE SEQUENCE

SEQUENCE STEP

A. PREHEAT FURNACES

B. SCRUBBER ON LINE

C. DEACTIVATION/MELT FURNACE:
1. OPEN DEACTIVATION/MELT CHAMBER DOORS
2. LOAD CHARGE BINS INTO CHAMBERS
3. CLOSE DEACTIVATION/MELT CHAMBER DOORS
4. PRESS START CYCLE BUTTON
5. TEMP. RAMPS TO 900°F
6. TRANSFER TROUGH VALVE OPENS
7. TEMP. RAMPS TO 1600°F
8. TRANSFER TROUGH VALVE CLOSES
9. TEMP. RAMPS TO 250°F
10. END OF CYCLE LIGHT GOES ON
11. OPEN DEACTIVATION/MELT CHAMBER DOORS
12. REMOVE CHARGE BINS
13. CLOSE DEACTIVATION/MELT CHAMBER DOORS

D. MELT/HOLDING FURNACE:
1. OPEN LOADING DOOR
2. PLACE SCRAP ALUMINUM ON HEARTH
3. CLOSE LOADING DOOR
4. PUSH "MELT" BUTTON

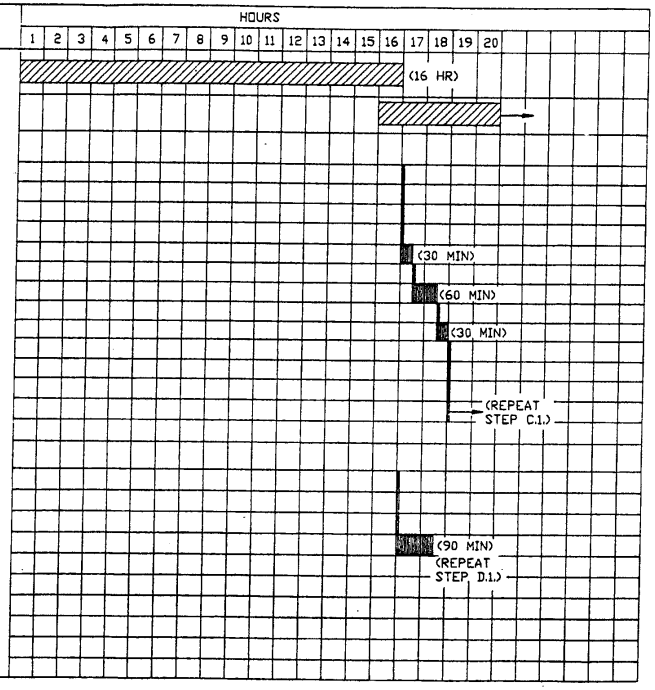

This document is the work of Gillespie & Powers, Inc. and is strictly confidential, and is given with the understanding that neither it nor any information contained therein will be copied, published or transmitted to others.

INFLATOR PROCESSING SYSTEM OPERATING CYCLE SEQUENCE

MORTON INTERNATIONAL
OGDEN, UTAH

GILLESPIE & POWERS, INC.
JOB NO. 1557
SHT. SEQ-1
6/3/94