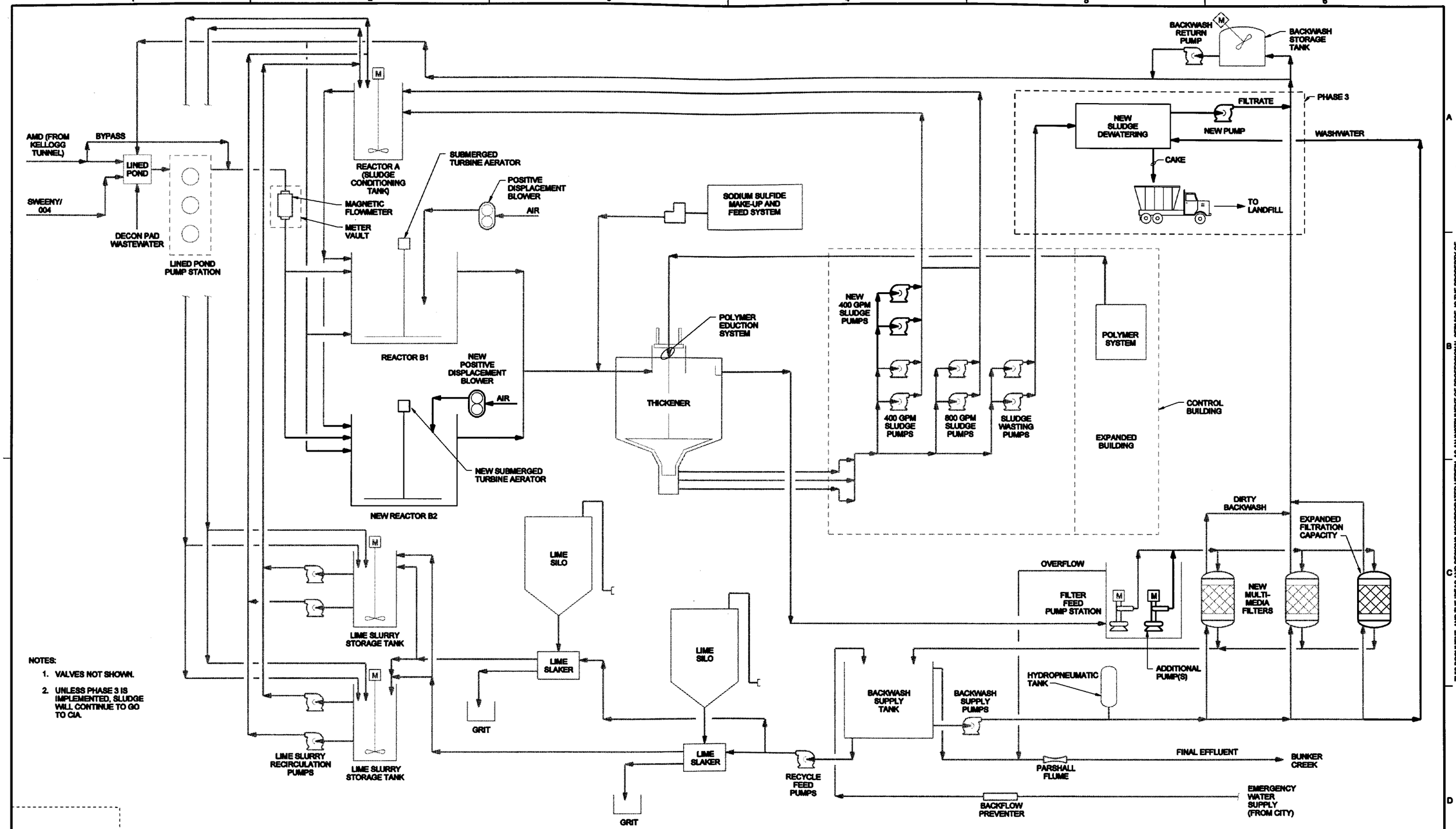

NOTES:

1. VALVES NOT SHOWN.
2. UNLESS PHASE 3 IS IMPLEMENTED, SLUDGE WILL CONTINUE TO GO TO CIA.

PRELIMINARY

NOT FOR CONSTRUCTION

DSGN	J MACK
DR	D SUNSERI
CHK	B YORK
APVD	J STEFANOFF

NO.	DATE	REVISION	BY	APVD

VERIFY SCALE
BAR IS ONE INCH ON ORIGINAL DRAWING.
0 1"
IF NOT ONE INCH ON THIS SHEET, ADJUST SCALES ACCORDINGLY.

CH2MHILL

BUNKER HILL
CENTRAL WATER TREATMENT PLANT

FIGURE 5 - PHASE 2 (AND 3)
PROCESS FLOW DIAGRAM

SHEET	
DWG	
DATE	AUG 2000
PROJ	182220

pfdph2.dgn 16-AUG-2000 14:37:39

REUSE OF DOCUMENTS: THIS DOCUMENT, AND THE IDEAS AND DESIGNS INCORPORATED HEREIN, AS AN INSTRUMENT OF PROFESSIONAL SERVICE, IS THE PROPERTY OF CH2MHILL AND IS NOT TO BE USED, IN WHOLE OR IN PART, FOR ANY OTHER PROJECT WITHOUT THE WRITTEN AUTHORIZATION OF CH2MHILL.
© CH2M HILL

NEXT