APPENDIX A

Sampling Apparatus

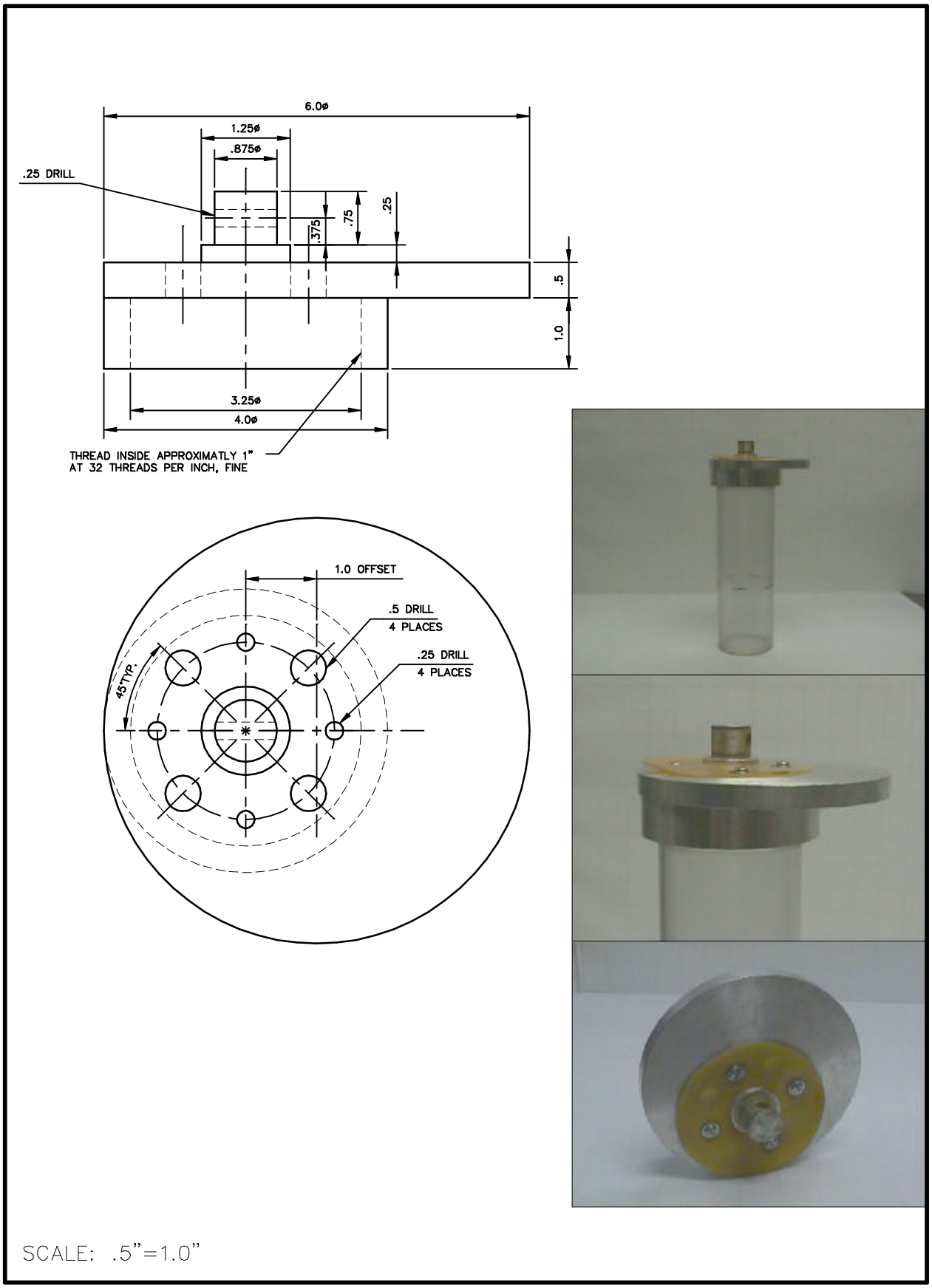

Figure A.1. Surface flange of soil cores.

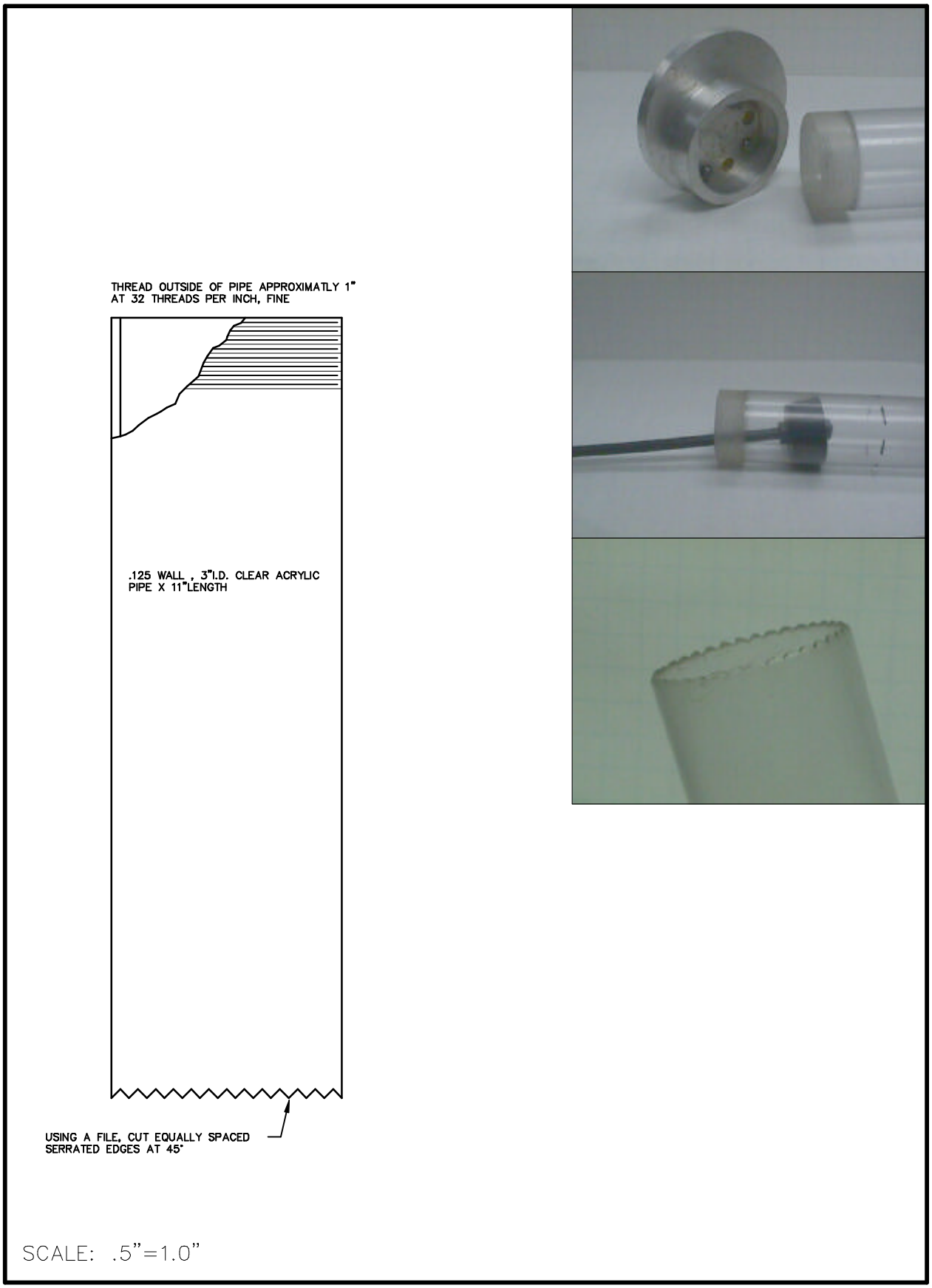

Figure A.2. Acrylic soil sampling tube.

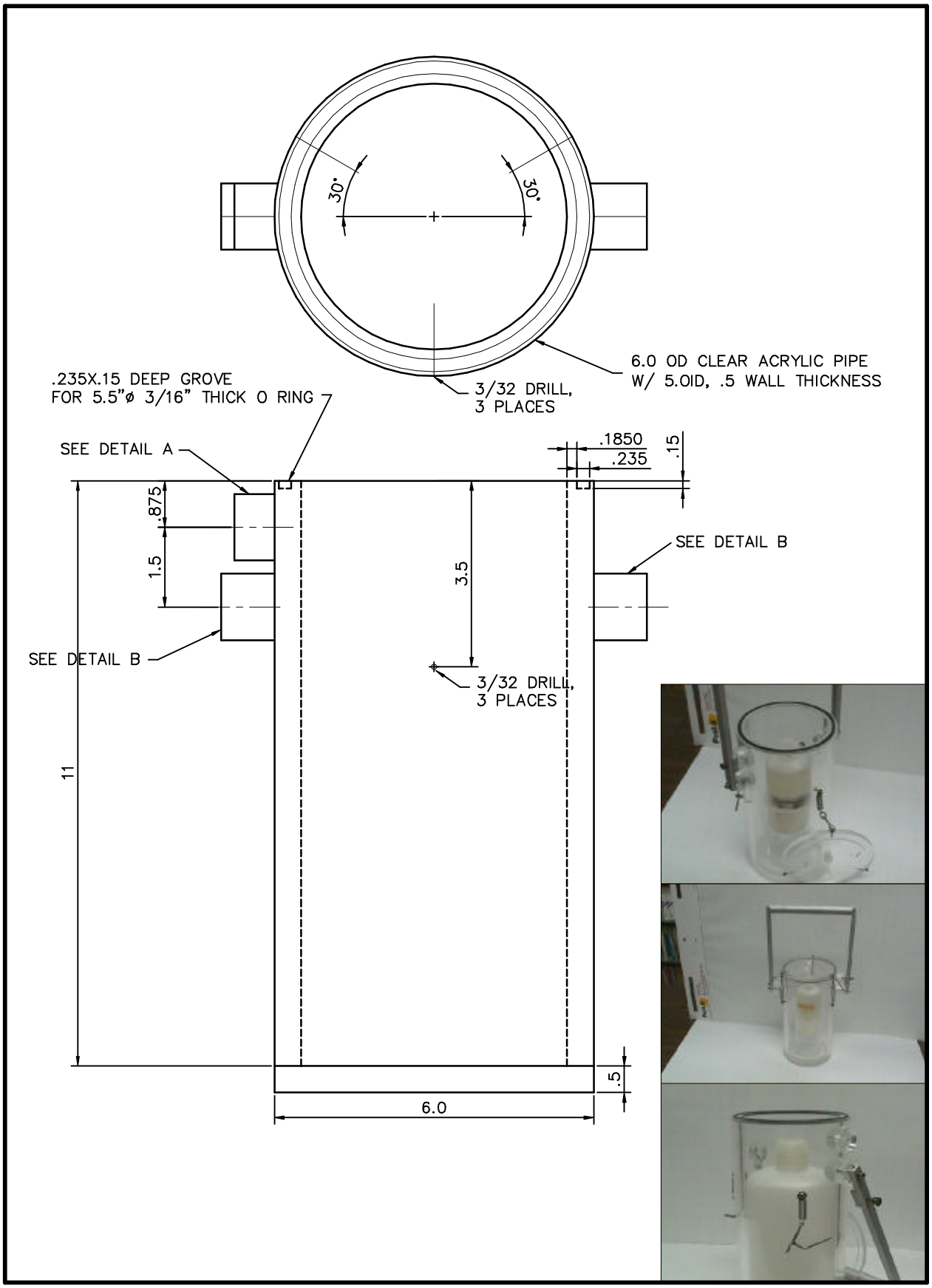

Figure A.3. Main body of vacuum chamber for vacuum water sampler.

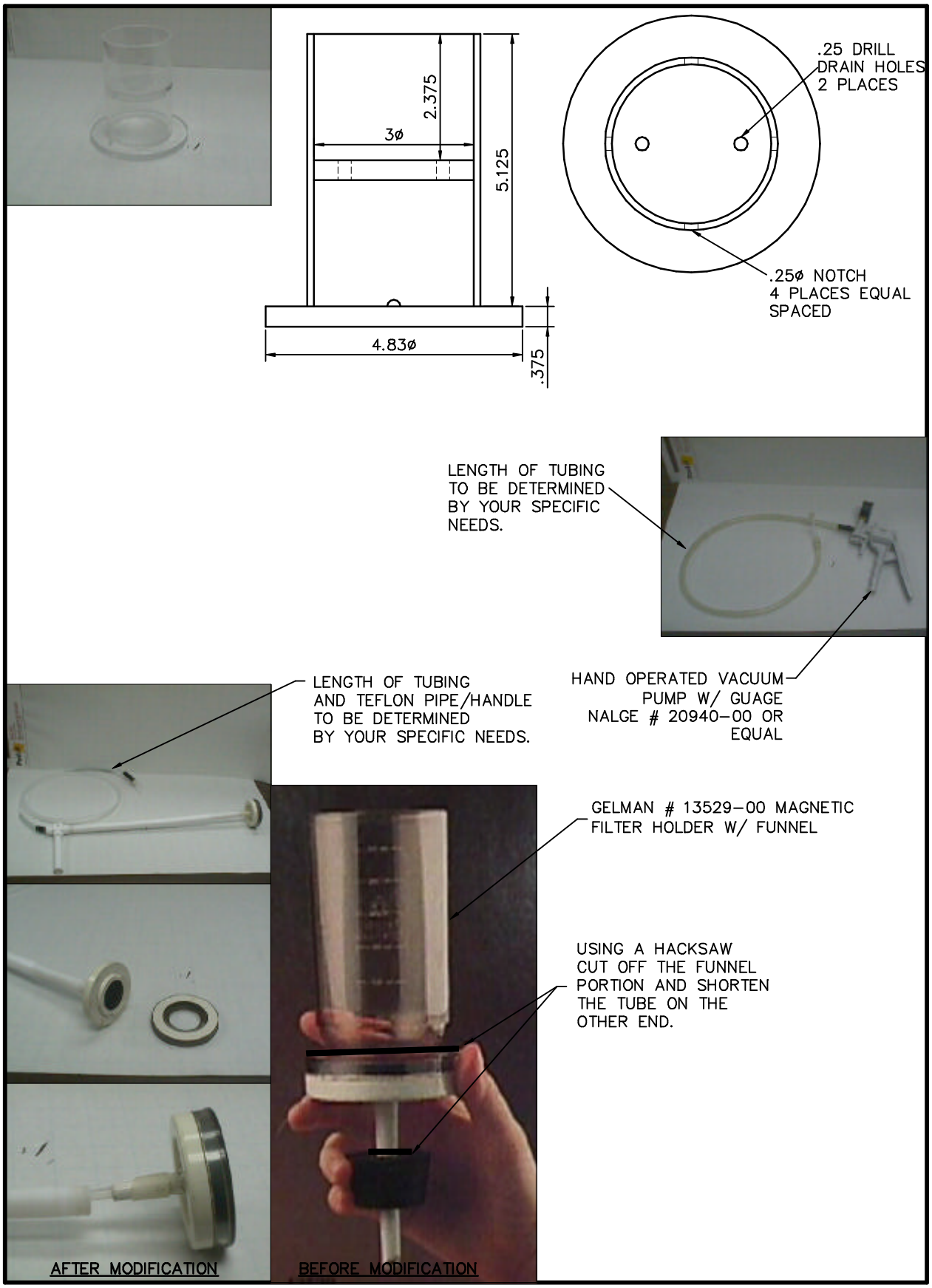

Figure A.4. Details of parts for vacuum water sampler.

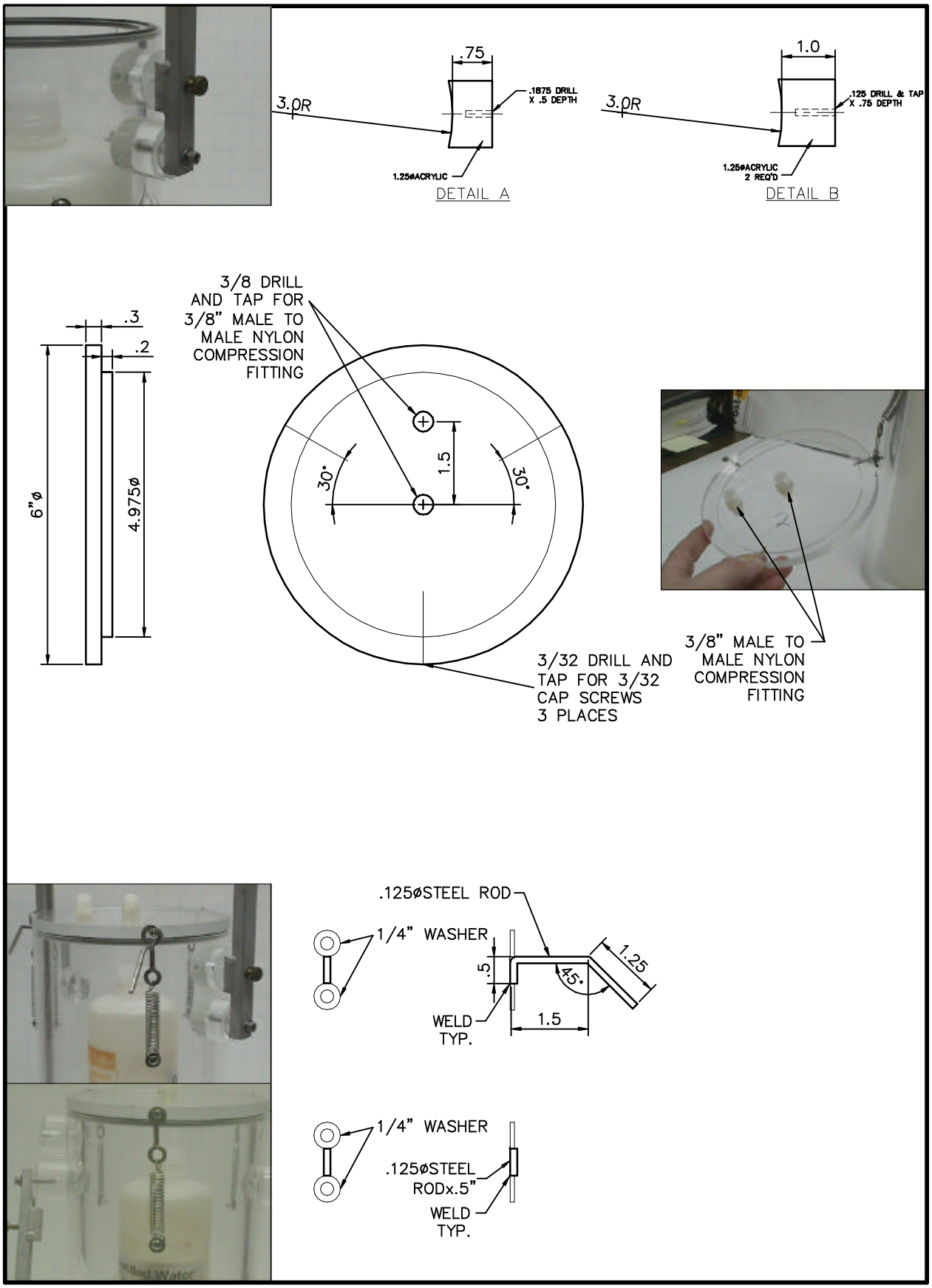

Figure A.5. Details of parts of vacuum water sampler.

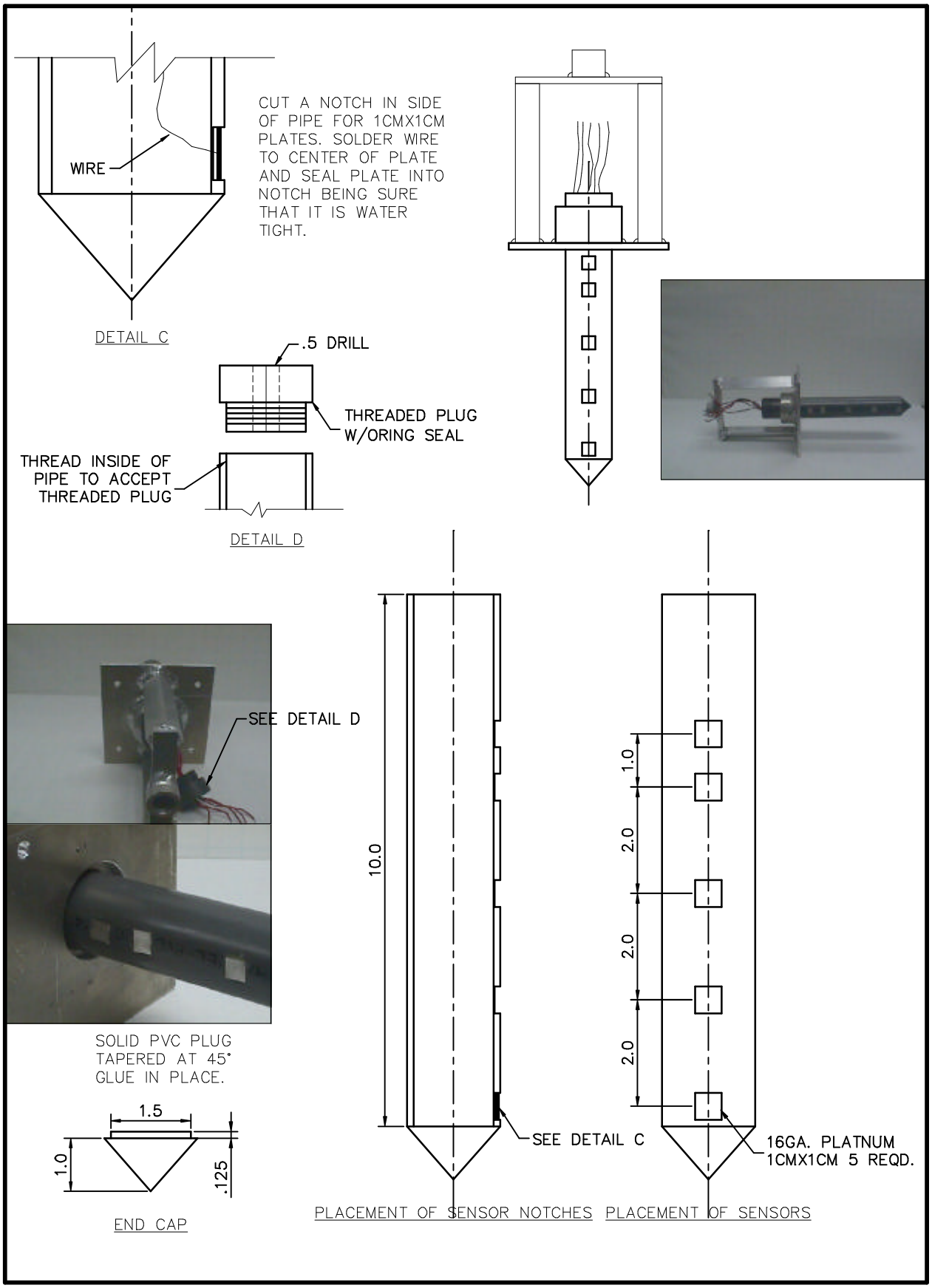

Figure A.6. Details of soil redox probe with sensors.

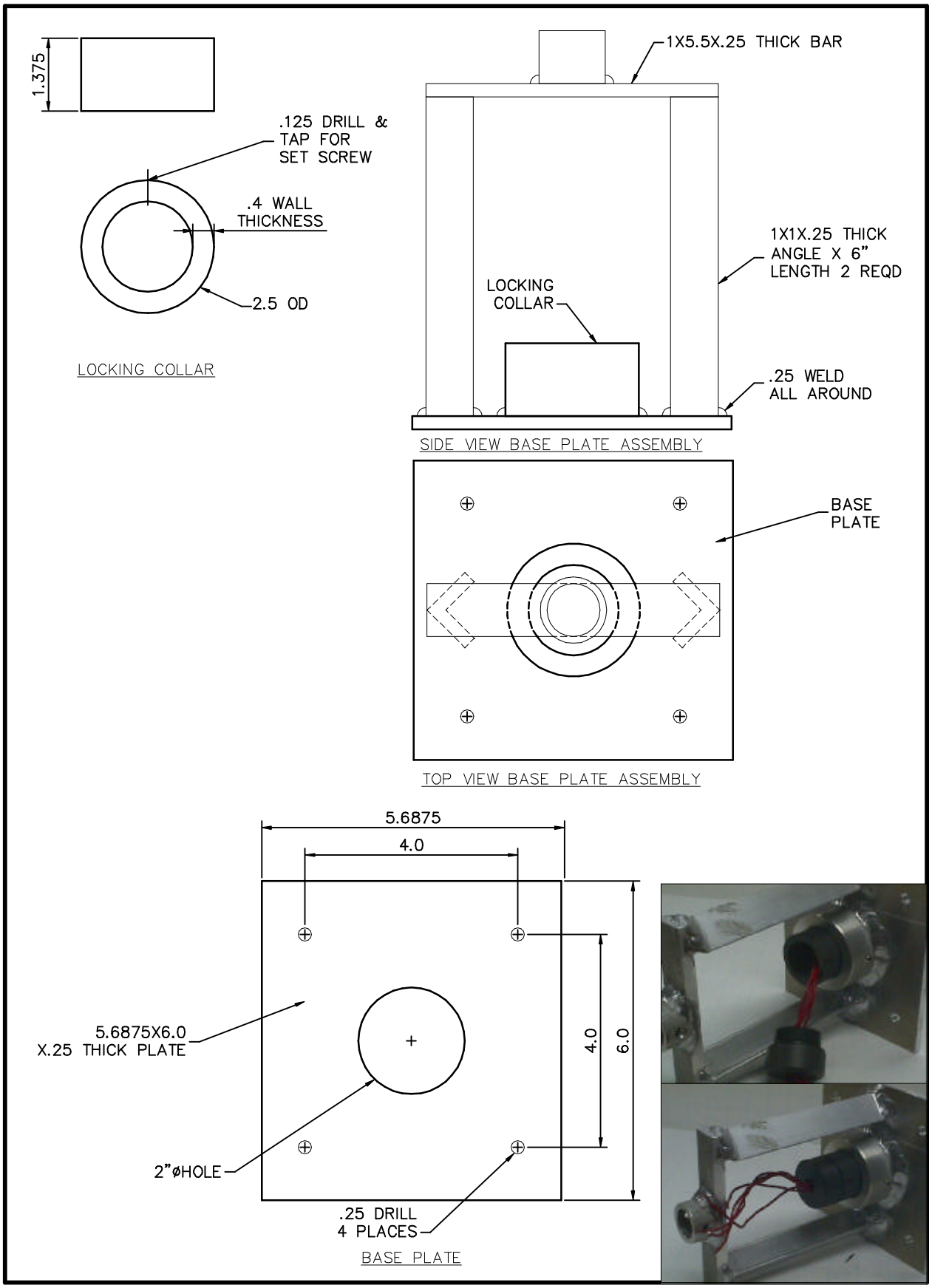

Figure A.7. Base plate assembly for redox soil probe.