Prevention of Significant Deterioration Greenhouse Gas Permit Application for the Tenaska Roans Prairie Generating Station

Prepared for
Tenaska Roans Prairie Partners, LLC
Grimes County, Texas

July 22, 2013

www.erm.com

Prevention of Significant Deterioration Greenhouse Gas Permit Application for the Tenaska Roans Prairie Generating Station

July 22, 2013

Project No. 0189555
Tenaska Roans Prairie Generating Station

Peter T. Belmonte, P.E.
Partner-in-Charge

Siddharth (Sid) Rajmohan
Project Manager

Environmental Resources Management
15810 Park Ten Place, Suite 300
Houston, Texas 77084-5140
T: 281-600-1000
F: 281-600-1001

Texas Registered Engineering Firm F-2393

TABLE OF CONTENTS

1.0 INTRODUCTION 1

1.1 PROJECT PURPOSE AND DESCRIPTION 1
1.2 APPLICATION ORGANIZATION 2

2.0 SITE LOCATION AND PROCESS DESCRIPTION 3

2.1 SITE LOCATION 3
2.2 PROCESS DESCRIPTION 3

3.0 REGULATORY REVIEW 7

3.1 FEDERAL REGULATIONS 7
3.1.1 Federal Major New Source Review 7
3.1.2 Compliance Assurance Monitoring (CAM) 40 CFR 64 7
3.1.3 Mandatory GHG Reporting Rule 8

4.0 BEST AVAILABLE CONTROL TECHNOLOGY (BACT) ANALYSIS 9

4.1 SUMMARY OF PROPOSED BACT 10
4.2 BACT FOR COMBUSTION TURBINES 11
4.2.1 Step 1: Identify All Available Control Technologies 11
4.2.2 Step 2: Eliminate Technically Infeasible Options 14
4.2.3 Step 3: Rank Remaining Control Technologies 17
4.2.4 Step 4: Evaluate and Document Remaining Control Technologies 17
4.2.5 Step 5: Select BACT 20
4.3 NATURAL GAS FUGITIVE EMISSIONS 25
4.3.1 Step 1: Identify All Available Control Technologies 25
4.3.2 Step 2: Eliminate Technically Infeasible Options 25
4.3.3 Step 3: Rank Remaining Control Technologies 25
4.3.4 Step 4: Evaluate and Document Remaining Control Technologies 25
4.3.5 Step 5: Select BACT 25
4.4 DIESEL FIRED EMERGENCY ENGINES 26
4.4.1 Step 1: Identify All Available Control Technologies 26
4.4.2 Step 2: Eliminate Technically Infeasible Options 27
4.4.3 Step 3: Rank Remaining Control Technologies 27
4.4.4 Step 4: Evaluate and Document Remaining Control Technologies 27
4.4.5 Step 5: Select BACT 27
4.5 FUGITIVE SF_6 EMISSIONS FROM ELECTRICAL COMPONENTS 28
4.5.1 Step 1: Identify All Available Control Technologies 28
4.5.2 Step 2: Eliminate Technically Infeasible Options 28
4.5.3 Step 3: Rank Remaining Control Technologies 28

4.5.4 Step 4: Evaluate and Document Remaining Control Technologies *29*
4.5.5 Step 5: Select BACT *29*

5.0 GREENHOUSE GAS EMISSION CALCULATIONS *30*

5.1 POTENTIAL EMISSIONS CALCULATIONS *30*
5.1.1 Combustion Turbines *30*
5.1.2 Diesel Fired Emergency Engines *31*
5.1.3 Fugitive SF_6 Emissions from Electrical Equipment *32*
5.1.4 GHG Emissions from Fugitive Natural Gas Losses due to Leaks and Equipment Maintenance *33*
5.1.5 Summary of GHG Emissions from Project *33*

6.0 ADDITIONAL REQUIREMENTS UNDER PSD *35*

6.1 IMPACT EVALUATION PURSUANT TO FEDERAL ACTION *35*
6.1.1 Federal Endangered Species Act *35*
6.1.2 National Historic Preservation Act *35*

LIST OF APPENDICES

A	*PERMIT APPLICATION FORMS*
B	*EMISSION RATE CALCULATIONS*
C	*RECENTLY ISSUED PERMITS AND PENDING APPLICATIONS*
D	*SUPPORTING DOCUMENTATION*
E	*CONFIDENTIAL SUPPORTING DOCUMENTATION*

LIST OF FIGURES

2-1	*AREA MAP*
2-2	*USGS MAP*
2-3	*PROCESS FLOW DIAGRAM*

LIST OF TABLES

3-1	*PSD APPLICABILITY SUMMARY TABLE*
4-1	*SUMMARY OF PROPOSED BACT FOR COMBUSTION TURBINES*
4-2	*SUMMARY OF PROPOSED BACT FOR NATURAL GAS FUGITIVE EMISSIONS*
4-3	*SUMMARY OF PROPOSED BACT FOR EMERGENCY ENGINES*
4-4	*SUMMARY OF PROPOSED BACT FOR FUGITIVE SF_6 EMISSIONS*
4-5	*EMISSIONS OF CO_2 FROM SOLID AND GASEOUS FUELS AVAILABLE FOR USE IN COMBUSTION TURBINES*
4-6	*RANKING OF TECHNICALLY FEASIBLE EMISSIONS REDUCTION OPTIONS OF GREENHOUSE GASES FROM COMBUSTION TURBINES*
4-7	*MEA CAPTURE COST ESTIMATE*
4-8	*RANKING OF TECHNICALLY FEASIBLE EMISSIONS REDUCTION OPTIONS OF GREENHOUSE GASES FROM NATURAL GAS FUGITIVES*
4-9	*RANKING OF TECHNICALLY FEASIBLE EMISSIONS REDUCTION OPTIONS OF GREENHOUSE GASES FROM EMERGENCY ENGINES*
4-10	*RANKING OF TECHNICALLY FEASIBLE EMISSIONS REDUCTION OPTIONS OF GREENHOUSE GASES FROM FUGITIVE SF_6 EMISSIONS*
5-1	*TURBINE MAXIMUM HEAT INPUT CAPACITIES*
5-2	*NATURAL GAS-FIRED TURBINE GHG EMISSION FACTORS*
5-3	*GLOBAL WARMING POTENTIALS*
5-4	*TOTAL GHG (CO_{2E}) EMISSIONS FROM THE NATURAL GAS TURBINES*
5-5	*GHG EMISSIONS FROM THE NATURAL GAS BURNER*
5-6	*EMERGENCY ENGINE GHG EMISSION FACTORS*
5-7	*GHG EMISSIONS FROM THE EMERGENCY ENGINES*
5-8	*GLOBAL WARMING POTENTIAL OF SULFUR HEXAFLUORIDE*
5-9	*GHG EMISSIONS FROM THE HIGH VOLTAGE ELECTRICAL EQUIPMENT*
5-10	*SUMMARY OF POTENTIAL GHG (CO_{2E}) EMISSIONS FROM THE TENASKA FACILITY*

1.0 INTRODUCTION

Tenaska Roans Prairie Partners, LLC (TRPP) is submitting this permit application to authorize the construction of a peaking power generation facility near Shiro in Grimes County, Texas. The Roans Prairie Generating Station (RPGS) will provide up to 694 nominal gross megawatts (MW) of power to supplement the Electric Reliability Council of Texas (ERCOT) power grid during peak power demand. TRPP is proposing three simple cycle gas-fired turbines for power generation, one diesel-fired emergency generator and one diesel-fired fire pump engine.

Per the Greenhouse Gas (GHG) tailoring rule published in the Federal Register on June 3, 2010, new sources having the potential to emit (PTE) GHG emissions 100,000 tons per year (tpy) or more of carbon dioxide equivalents (CO_2e) are subject to Prevention of Significant Deterioration (PSD) review under 40 CFR 52.21. Although the state of Texas is the delegated authority for New Source Review (NSR) and PSD under its State Implementation Plan (SIP) for criteria air pollutants, it has yet to revise its SIP to implement the GHG Tailoring Rule. On December 23, 2010, the United States Environmental Protection Agency (USEPA) signed the Federal Implementation Plan (FIP) authorizing the USEPA Region 6 to issue permits in Texas until approval of a SIP.

The PTE from the Tenaska Roans Prairie Generating Station exceeds 100,000 tpy CO_2e. Therefore, the project is subject to PSD review for GHG emissions, and TRPP submits this application for a GHG PSD permit. This application includes a description of project scope, calculation of GHG emissions, and review of Best Available Control Technology (BACT). Further, the project triggers PSD for criteria air pollutants. As such, TRPP will be submitting an application for an air quality permit for construction to the Texas Commission on Environmental Quality (TCEQ) and a copy of this application will be submitted to USEPA Region 6 when available.

1.1 PROJECT PURPOSE AND DESCRIPTION

The Roans Prairie Station is being designed as a natural gas-fueled power generating facility to serve the peaking segment of the ERCOT wholesale power market. This market segment is characterized by increases in daytime demand during the summer months, and relatively infrequent, high-demand "peak" periods that occur when demand is extraordinarily high and supply decreases substantially due to plants going off-line (including renewable wind resources). For example, between May 2011 and March 2013, there were more than 700 instances where the ERCOT load increased by more than 1,000 MW in less than 15 minutes. The high penetration of renewables in ERCOT also creates volatility and intermittency. During this same period, there were 100 instances per year where wind generation decreased by 400 MW or more in 15 minutes. Natural gas fueled peaking units, which are capable of quickly providing supplemental power to the electric grid, are ideal for providing generation and load balancing against unanticipated or uncontrollable changes in load or generation. Peaking

plants have traditionally been configured with simple cycle combustion units, and there is ample operational evidence showing that they can reliably meet peaking demand.

To meet this peak power demand, TRRP is proposing a power generation system that will include either three Siemens SGT6-5000F (5ee), GE 7FA.05, or GE 7FA.04 simple cycle turbines. Each unit will be limited to 33% capacity factor, approximately equivalent to 2,920 hours per year of operation at full load.

Peaking plants have traditionally been configured with simple cycle combustion units because they can achieve the necessary output quickly and can be shut down quickly when the peak demand abates. Although other technologies for producing the necessary power are available, they cannot meet demand quickly, are not designed for rapid load cycling, or are not cost-effective for the desired business purpose.

In addition, the Roans Prairie Station will operate two emergency diesel-fired engines, one each to provide power for plant control systems in case of grid power loss and operate a fire pump in case of an emergency. As a simple cycle unit, this facility does not operate a steam turbine and has no requirements for a heat rejection system.

1.2 APPLICATION ORGANIZATION

This Technical Support Document and the enclosed application forms in Appendix A constitute the application for a permit to construct under 40 CFR 52.21 for the proposed Roans Prairie Generating Station. Please note that confidential information (Appendix E) is being submitted to the USEPA Region 6 under a separate cover.

The remainder of the application is organized as follows:

Section 2.0 – Site Location, Process Description, and Area Map

Section 3.0 – Federal Applicability to the Proposed Project

Section 4.0 – BACT and Lowest Achievable Emission Rate (LAER) Analyses

Section 5.0 – Emission Rate Calculations

Section 6.0 – Additional Requirements under PSD

Appendix A – Permit Application Forms

Appendix B – Emission Rate Calculations and Gas Turbine Data

Appendix C – Recently Issued Permits

Appendix D – Supporting Documentation

2.0 SITE LOCATION AND PROCESS DESCRIPTION

2.1 SITE LOCATION

The location of the proposed project is in Grimes County, Texas near Shiro. This location was chosen because it is proximate to existing natural gas supply and electricity transmission lines near the target market. The location is shown on the area and USGS maps provided as Figures 2-1 and 2-2, respectively.

2.2 PROCESS DESCRIPTION

The Roans Prairie Station project will be a peaking power production facility which will include three gas turbines, one diesel-powered emergency generator, and one diesel-powered fire pump engine.

Gas Turbine (GT):
The three Siemens SGT6-5000F(5ee), GE 7FA.05, or GE 7FA.04 simple cycle turbines are the current basis for the process design. The gas turbines will combust natural gas exclusively and will be capable of generating a total nominal gross output of 507 to 694 MWe, depending upon turbine model and ambient conditions. Each combustion turbine will utilize low NO_X burners to minimize NO_X emissions.

Two Diesel-Fired Emergency Engines:
Two diesel fired emergency engines will be installed. One of these engines (2,937 hp) will be used to provide emergency electric power for control systems, and the other (575 hp) will be used to power a firewater pump.

Process Flow Diagram for the facility is presented in Figure 2-3.

Environmental Resources Management

DESIGN: S. Rajmohan	DRAWN: EFC	CHKD.: .
DATE: 7/15/2013	SCALE: AS SHOWN	REVISION: 0
W.O.NO.: H:\DWG\G13\0189555_Radii.mxd, 7/15/2013 11:48:48 AM		

FIGURE 1
3000 FOOT AND 1 MILE RADII MAP
Tenaska Roan's Prairie Generating Station
Tenaska Roans's Praire Partners, LLC
Roans Praire, Grimes County, Texas

ERM

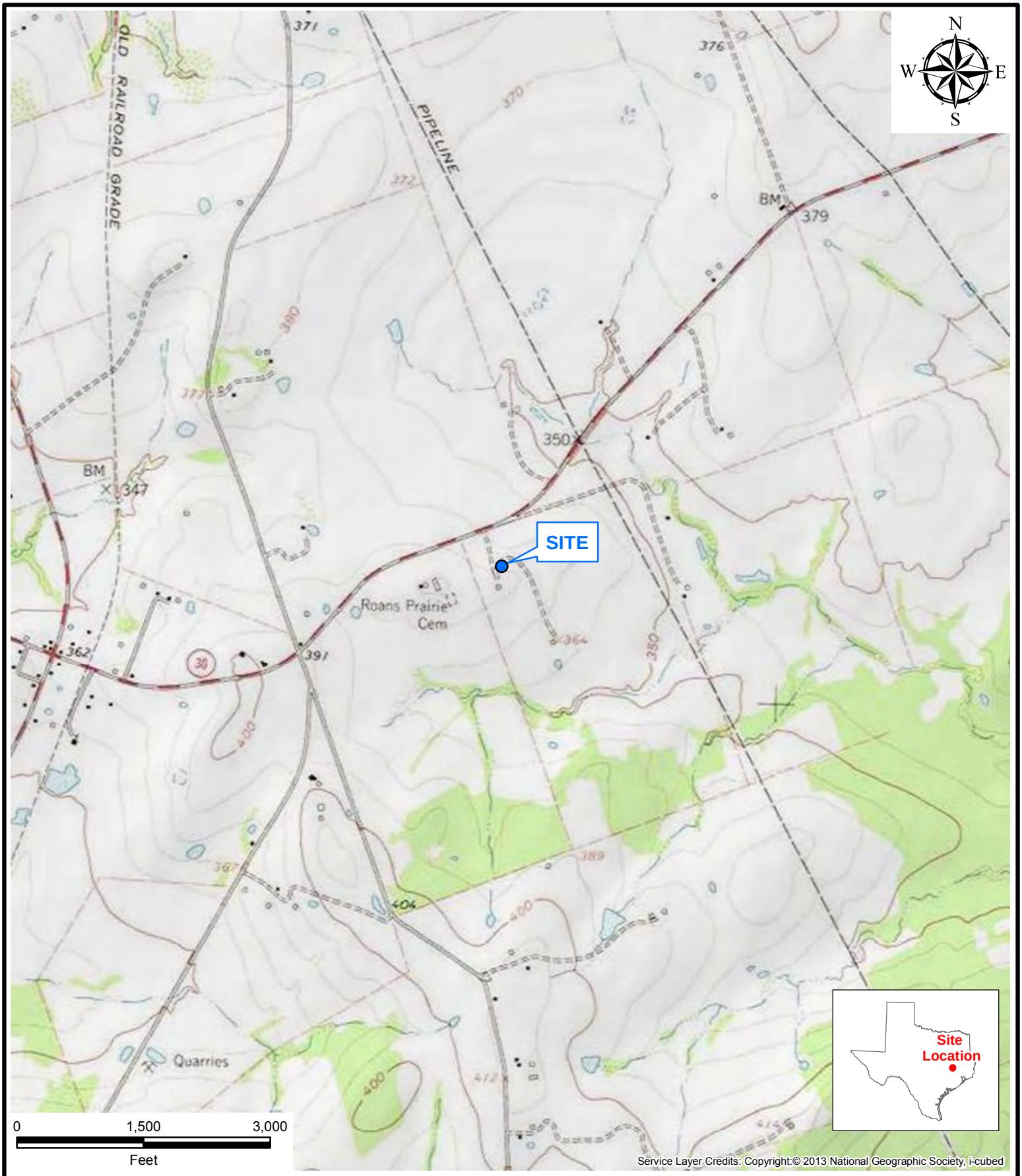

Environmental Resources Management

DESIGN: S. Rajmohan	DRAWN: EFC	CHKD.: .
DATE: 7/15/2013	SCALE: AS SHOWN	REVISION: 0
W.O.NO.: H:\DWG\G13\0189555_Site.mxd, 7/15/2013 11:51:42 AM		

FIGURE 2
SITE LOCATION
Tenaska Roan's Prairie Generating Station
Tenaska Roans's Praire Partners, LLC
Roans Praire, Grimes County, Texas

ERM

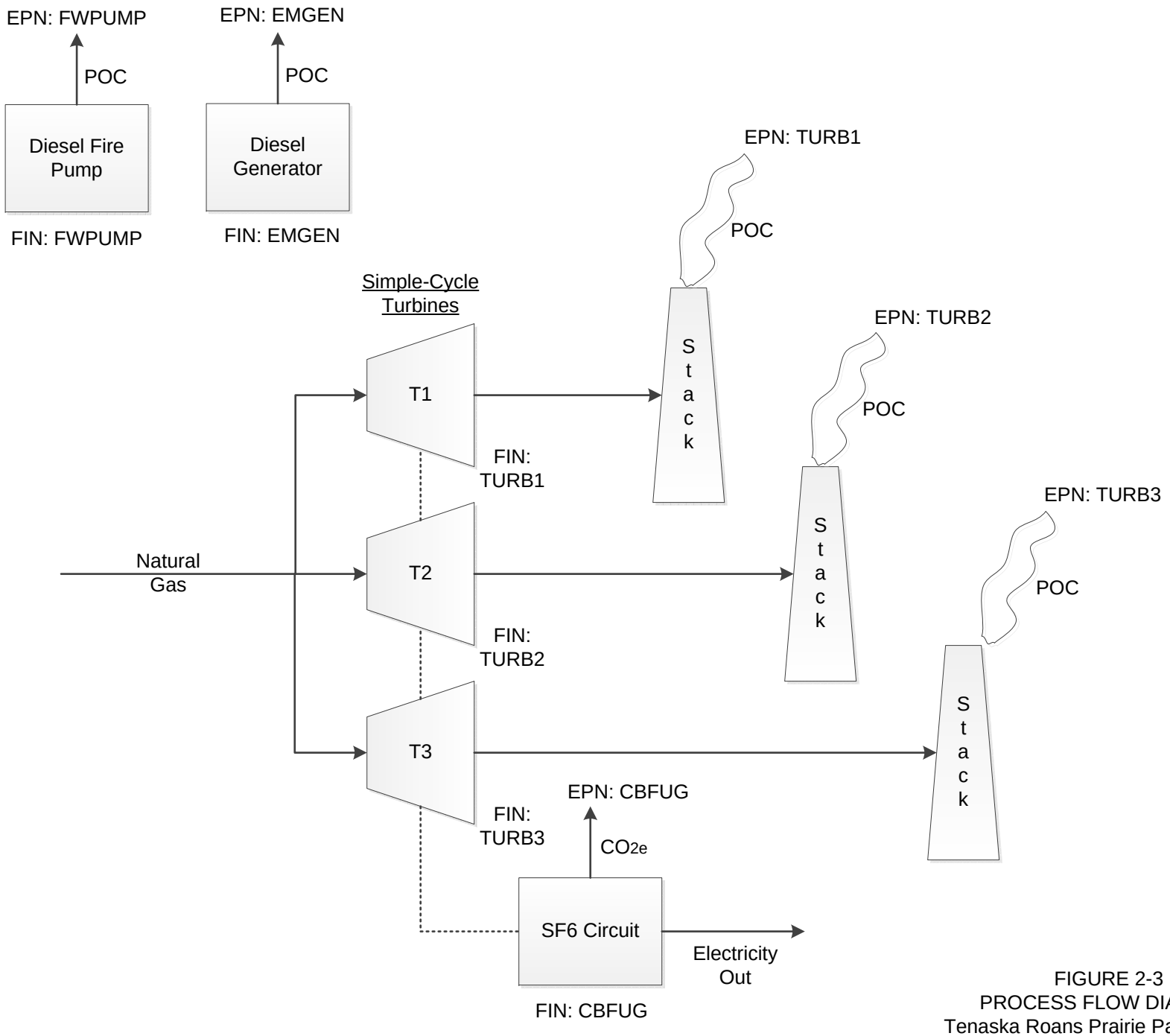

FIGURE 2-3
PROCESS FLOW DIAGRAM
Tenaska Roans Prairie Partners, LLC
Grimes County, Texas

G:\wo\Tenaska\0189555\A5469 Fig 2-3 PFD.vsd, 7/18/2013

3.0 REGULATORY REVIEW

The proposed project will be subject to federal and state environmental laws and regulatory requirements as outlined in the following sections. Only those regulations that are potentially applicable to the proposed project were reviewed in this application.

On May 3, 2011, the USEPA promulgated a Federal Implementation Plan (FIP) for Texas in which USEPA assumed the role of PSD permitting authority for large GHG-emitting sources in Texas in accordance with the thresholds established under the Tailoring Rule, which USEPA published on June 3, 2010. All other pollutants are regulated by the TCEQ under the SIP and are beyond the scope of this application.

3.1 FEDERAL REGULATIONS

3.1.1 Federal Major New Source Review

The GHG PSD Tailoring rule defines a new major source of GHG emissions as emitting 100,000 tpy of CO_2e and 100 tpy/250 tpy (depending on the source category) on a mass basis. A major modification under the rule is defined as an emission increase and net emissions increase of 75,000 tons or more of GHGs on a CO_2e basis and greater than zero tpy of GHGs on a mass basis. [40 CFR 52.21(b)(49)(iv)]

Table 3-1 shows the estimated project potential to emit (PTE) for each PSD-regulated GHG. The project PTE of each pollutant was compared to its PSD significance threshold to evaluate the applicability of PSD for each pollutant. The project is a new major source with emissions greater than 100,000 tpy CO_2e and 100 tpy of GHGs on a mass basis.

3.1.2 Compliance Assurance Monitoring (CAM) 40 CFR 64

The provisions of 40 CFR Part 64 (Compliance Assurance Monitoring [CAM]) apply to each Pollutant-Specific Emissions Unit (PSEU) when it is located at a facility that is required to obtain Part 70 or 71 permit, and the PSEU meets all of the following criteria:

1. The unit is subject to an emission limitation or standard;
2. The unit uses an active control device to achieve compliance with an emission limitation or standard; and
3. The unit has potential pre-control device emissions in the amount of tons per year required to classify that unit as a major source under Part 70 or 71.

The proposed turbines and engines will not use active control devices to control GHG emissions. Therefore, CAM requirements will not apply to these pollutant emissions.

3.1.3 *Mandatory GHG Reporting Rule*

Under the Mandatory Reporting Rule (40 CFR Part 98), beginning in 2010 facilities with fuel burning equipment with actual CO_2e emissions greater than or equal to 25,000 metric tons per year must submit an annual report for all source categories for which calculation methodologies are provided in subparts C of the rule. The PTE of GHG exceeds the reporting threshold. Therefore, TRPP will report GHG emissions under 40 CFR Part 98.

TABLE 3-1: PSD APPLICABILITY SUMMARY TABLE

Pollutant	Project Emissions Increases Siemens Turbines (tpy)	Project Emissions Increases GE 7FA.05 Turbines (tpy)	Project Emissions Increases GE 7FA.04 Turbines (tpy)	PSD Significance Threshold (tpy)	PSD Triggered? (Yes/No)
GHG (CO_2e)	1,279,559	1,246,107	1,152,224	100,000	Yes
CO_2	1,278,052	1,244,632	1,150,839	100	Yes
CH_4	26.99	26.37	24.64	100	Yes
N_2O	2.36	2.30	2.12	100	Yes

4.0 BEST AVAILABLE CONTROL TECHNOLOGY (BACT) ANALYSIS

Under 40 CFR 52.21, BACT shall be applied to reduce or eliminate air emissions from a new or modified facility. PSD BACT is applicable to all pollutants that are subject to PSD review as summarized in Table 3-1. BACT is defined in 40 CFR §52.21(b)(12) as:

"An emissions limitation (including a visible emission standard) based on the maximum degree of reduction for each pollutant subject to regulation under Act which would be emitted from any proposed major stationary source or major modification which the Administrator, on a case-by-case basis, taking into account energy, environmental, and economic impacts and other costs, determines is achievable for such source or modification through application of production processes or available methods, systems, and techniques, including fuel cleaning or treatment or innovative fuel combustion techniques for control of such pollutant. In no event shall application of best available control technology result in emissions of any pollutant which would exceed the emissions allowed by any applicable standard under 40 CFR parts 60 and 61. If the Administrator determines that technological or economic limitations on the application of measurement methodology to a particular emissions unit would make the imposition of an emissions standard infeasible, a design, equipment, work practice, operational standard, or combination thereof, may be prescribed instead to satisfy the requirement for the application of best available control technology. Such standard shall, to the degree possible, set forth the emissions reduction achievable by implementation of such design, equipment, work practice or operation, and shall provide for compliance by means which achieve equivalent results."

The USEPA guidance document, *PSD and Title V Permitting Guidance for Greenhouse Gases (EPA 457/B-11-001)*, USEPA recommends the use of the five-step "top down" BACT process established in the 1990 draft guidance *New Source Review Workshop Manual* to evaluate and select BACT for GHG. This process requires identification and consideration of all available control technologies. The applicant must then demonstrate control technologies that are infeasible due to engineering constraints. All remaining technologies are ranked in order of descending order of control effectiveness. The top-ranked control option must be selected unless the applicant can demonstrate that it is not viable due to adverse economic or environmental impacts. If the most effective technology is not selected, then the next most effective alternative should be evaluated until an option is selected as BACT. The BACT process is summarized as follows:

- Step 1 – Identify all available control technologies;
- Step 2 – Eliminate technically infeasible options;
- Step 3 – Rank remaining control technologies;
- Step 4 – Evaluate and document remaining control technologies; and
- Step 5 – Select BACT.

Each of the steps listed above have been evaluated in detail for each project-related emissions source combination in the following sections.

4.1 SUMMARY OF PROPOSED BACT

A summary of BACT limits and technologies proposed in this permit application are summarized in Tables 4-1 to Table 4-4.

TABLE 4-1: Summary of Proposed BACT for Combustion Turbines

Pollutant	Limit (Siemens)	Limit (GE 7FA.05)	Limit (GE 7FA.04)	Control Technology/ Standard	Averaging Time / Compliance Method
CO_2 (lb CO_2/MWh_{gross})	1,363	1,356	1,355	Good combustion practices, operations and maintenance	720 hour rolling average/fuel monitoring / Records
CO_2e (tpy)	1,279,088	1,245,636	1,151,754	Fuel Selection	12 month rolling average/Fuel Monitoring

TABLE 4-2: Summary of Proposed BACT for Natural Gas Fugitives

Pollutant	Limit	Control Technology/Standard	Averaging Time / Compliance Method
CO_2e	70 tpy (12 month rolling average)	AVO[1], maintenance plan	12 month rolling average/ Maintenance and AVO plan documentation

[1] *AVO (audio/visual/olfactory)*

TABLE 4-3: Summary of Proposed BACT for Emergency Engines

Pollutant	Limit	Control Technology/Standard	Averaging Time / Compliance Method
CO_2	163 lb/MMBtu (HHV)	Good combustion practices, operation and maintenance	12 month rolling average / fuel monitoring

TABLE 4-4: Summary of Proposed BACT for Fugitive SF_6 Emissions

Pollutant	Limit	Control Technology/Standard	Averaging Time / Compliance Method
CO_2e	210 tpy (12 month rolling average)	AVO, maintenance program, state-of-the-art circuit breakers	12 month rolling average / Maintenance and AVO program documentation

4.2 BACT FOR COMBUSTION TURBINES

4.2.1 Step 1: Identify All Available Control Technologies

TRPP performed a search of the USEPA RACT/BACT/LAER Clearinghouse (RBLC) for natural-gas fired turbines and recently issued PSD permits for GHG emissions from gas turbines. A summary of previous BACT determinations are provided in Table C-1 in Appendix C. While all gas fired turbines were considered and included in this search for completeness, only comparable simple cycle peaking power production facilities were considered in the final BACT analysis.

TRPP reviewed the GHG BACT analysis of the Pio Pico Energy Center which includes three 100 MW GE LMS100, aero-derivative, simple cycle turbines. Therein, USEPA Region 9 reviewed the thermal efficiency of several power frames with thermal efficiencies ranging from 9,254 to 9,790 Btu_{HHV}/kW-hr_{gross}, and established a BACT limit of 1,328 lb CO_2/MW-hr on a 720 rolling hour basis. This efficiency limit was based on the thermal efficiency of the turbines at 50% load, including a 7.4% factor to account for non-standard conditions, site variability, and equipment degradation over time. Similarly, the York Generating Station was recently issued a permit by the Pennsylvania Department of Environmental Protection (PaDEP) for two aero-derivative LM6000 units rated at a combined heat input of 634 MMBtu/hr. PaDEP established a 1,330 lb CO2/MW-hr limit commensurate with the Region 9 permit for Pio Pico.

TRPP also reviewed the GHG BACT analysis of the Montana Power Station which includes four 100 MW GE LMS100, aero-derivative, simple cycle turbines. The proposed BACT limits for the facility are an efficiency limit of 1,194 lb CO_2/MW-hr on a 365 day rolling average, and an annual limit on CO_2e emissions. This proposed limit was based on the thermal efficiency at 50% load, but appears to be artificially low, as it does not take into account performance degradation, site variability, or variability in fuel carbon density. As such, TRPP does not consider the proposed limit on the Montana station a viable comparison, until those factors listed above are taken into account.

The Pio Pico and EPE Montana projects are much smaller, at 300 MW and 400 MW, respectively, than the proposed TRPGS at 660 MW (all nominal values). Each of these projects identified specific needs for relatively small incremental capacity to respond to very localized needs, including up to four daily starts per turbine. Thus, smaller turbines may be more appropriate for

those projects. In contrast, the RPGS is being designed to provide larger amounts of peaking power with longer run times without specific service territory or contract restraints. Based upon this design model, Section 4.2.4.2 demonstrates the proposed turbines have the lowest cost of avoided CO_2 emissions.

4.2.1.1 *Inherently Low Emitting Design*

High Efficiency Generators

There are five general categories of inherently low emitting design sources for the generation of electricity.

- Combined Cycle Frame Gas Turbines

  Conventional combined cycle frame turbines combine a simple cycle turbine with a heat recovery steam generator (HRSG) and steam turbine to generate electricity. These turbines are designed primarily to provide base load power and require start times ranging from one to six hours. They are not designed to be cycled up and down repeatedly as is required for a peaking unit. Operating in this manner would cause significant maintenance and operational issues. Due to these design limitations, they do not meet the business purpose of peaking power.

- Combined Cycle Fast Start Options

  Fast start combined cycle turbines are similar to conventional combined cycle in that they combine a simple cycle turbine with a HRSG and steam turbine to generate electricity. There are two broad types of fast start combined cycle: 1) fast start type 1 (as exemplified by the Siemens Flex Plant 30 and GE FlexEfficiency 60), that require approximately 30 minutes to achieve full load and retain full-load operating efficiency similar to a conventional combined cycle and 2) fast start type 2 (as exemplified by the Siemens FlexPlant 10 that require 10-15 minutes to achieve full load, but has reduced efficiency compared to a conventional combined cycle built around the same gas turbine.

- Reciprocating Engines

  Reciprocating engines are often used to generate small amounts of electricity, for isolated sources or to provide back-up power in case of an emergency. Though they are not typically used for peaking power production, there are some commercial models capable of generating approximately 18MW of gross power, as exemplified by the Wartsila 50SG.

- Simple Cycle Aero-derivative Gas Turbines

  Aero-derivative simple cycle turbines are simple cycle turbines derived from jet engine design, exemplified by the GE LMS100 series turbines. They are typically lighter weight, slightly more efficient, and are more expensive per unit of power produced than traditional frame turbines. They are modularly designed, use anti-friction rather than hydraulic bearings, and require a higher inlet pressure of fuel and air, compared to frame turbines.

- Simple Cycle Frame Gas Turbines

  Frame simple cycle turbines are the traditional design for simple cycle power generation. They have a quick start time of 10-15 minutes even from a cold start, and they have a strong track record as a reliable source of peak power.

4.2.1.2 *Good Combustion, Operating and Maintenance Practices*

Good combustion, operating and maintenance practices improve fuel efficiency of the combustion turbines by ensuring optimal combustion efficiencies are achieved as intended in the design of the burner. Good operating practices include the use of operating procedures including startup, shutdown and malfunction procedures, the use of instrumentation and controls for operational control, and maintaining manufacturer recommended combustion parameters. Maintenance practices include performing manufacturer recommended preventative maintenance.

4.2.1.3 *Fuel Selection*

The use of fuels with low carbon intensity and high heat intensity is appropriate BACT for GHG. The use of natural gas fuels meets these criteria as demonstrated in Table 4-5 summarizing emission factors for various turbine fuels.

TABLE 4-5: Emissions of CO_2 from Gaseous and Liquid Fuels Available For Use in Combustion Turbines

Fuel Option	Emission Factor (kg CO_2/MMBtu)	Carbon Intensity (relative to natural gas)
Natural Gas	53.02	--
Propane Gas	61.46	1.16
Distillate No. 2	73.96	1.39
Biomass Liquids[1]	68.44 – 81.55	1.29 – 1.54

[1] *Includes biodiesel and various bioethanols.*

4.2.1.4 *Carbon Capture and Sequestration*

In addition to reduction of GHG emissions by reducing fuel consumption through efficient design and optimal operation, control technologies to capture and sequester GHG emissions must be considered. Carbon Capture and Sequestration (CCS) has three main approaches including oxy-fuel combustion, pre-combustion capture, and post-combustion capture.

Oxy-fired technology involves the replacement of combustion air with pure oxygen to create a more concentrated CO_2 flow in the combustion exhaust. This technology is in the early stages of review and has not reached a commercial stage of deployment for coal fired boiler or gas turbine applications. As such, it will not be further considered. Pre-combustion capture is primarily applicable to gasification plants and is, therefore, not applicable to this project.

Of these approaches, post-combustion capture is applicable to gas turbines. Post-combustion capture involves separating CO_2 from the exhaust gas stream. Methods of post-combustion capture include adsorption, physical and chemical absorption, cryogenic separation, and membrane separation. If CO_2 capture can be reliably and economically achieved, transportation and reliable long-term storage are still required. This requires proximate access to a transport pipeline capable of delivering the enriched flue gases to a geologic formation suitable for long-term sequestration of CO_2.

4.2.2 *Step 2: Eliminate Technically Infeasible Options*

Of the technologies that meet the business purpose of providing peaking power when needed; only CCS is technologically infeasible. As described below in section 4.2.2.2, it is TRPP's opinion that carbon capture is not feasible for an intermittent source, such as a peak power generating facility. While TRPP believe carbon capture and sequestration to be infeasible, this report will later show that the economic and environmental costs of carbon capture and sequestration are also too high.

4.2.2.1 *Inherently low-emitting design*

The remaining technologies listed below, are technologically feasible:

- Inherently low emitting design
  - Fast Start Combined Cycle
  - Reciprocating Engines
  - Aero-derivative simple cycle turbines
  - Frame simple cycle turbines
- Fuel selection
- Good combustion and maintenance practices

4.2.2.2 *Carbon Capture and Sequestration*

There are three main types of CO_2 capture systems being developed for fossil power plants – (1) pre-combustion capture, (2) oxy-combustion, and (3) post-combustion capture. Among these, the only potentially applicable type for a simple cycle natural gas peaking plant would be the post combustion type. Due to the low concentration of CO_2 and low pressure of combustion flue gases, the leading technology for post combustion systems is chemical solvent absorption/desorption which work by contacting upward flowing flue gases

with downward flowing liquid solvent in vertical tower. However, due to the lower pressure of the gas, the size of the equipment for these systems is extremely large. As such, the circulating solvent flow rates and volume over which the solvent contacts the flue gas are immense. As a result, these systems have high operational inertia making them slow to start-up and reach steady-state operations (on the order of multiple hours). This timetable is inconsistent with the expected operating mode for the simple cycle peaker configuration which intermittently consists and fast starts and relatively short operating periods.

Absorption

Chemical absorption is characterized by the occurrence of a chemical reaction between the pollutant in gas phase and a chemical in liquid phase to form a compound. The most prevalent chemical for CO_2 removal from flue gas are amine solutions. Gas scrubbing systems employing amine are used for a wide variety of gas or liquid hydrocarbon treatment applications. Close contact between the gas and liquid amine solution is required to promote the mass transfer between the two phases. CO_2 has a high solubility in the amine scrubbing solution. Several amine solvents commercially used include monoethanolamine (MEA), diethanolamine (DEA), triethanolamine (TEA), diisopropanolamine (DIPA), diglycolamine (DGA), methyldiethanolamine (MDEA), n-methylethanolamine (NMEA), alkanolamine, and various propriety mixtures of these amines. Other chemical absorbents including ammonia, potassium carbonate, and lime are also in experimental phases for the treatment of flue gases.

Amine absorption has been tested in gas turbine applications and offers high capture efficiency and high selectivity. However, despite these benefits, amine absorption requires additional heat recovery which is unobtainable without a HRSG which is beyond the scope of this project. Northeast Energy Associates conducted CO_2 capture to produce 320 to 350 tons per day CO_2 using a Fluor Econamine scrubber on 15 percent of the flue gas from its 320 MW natural gas combined cycle facility in Bellingham, Massachusetts, from 1991 to 2005. The CO_2 was not sequestered, but was produced for the commercial (food-grade) CO_2 market and ultimately made its way into the atmosphere. The process was curtailed in 2005 because the CO_2 market no longer made the operation profitable. It is important to note this carbon capture "experience" was on an intermediate load combined cycle facility as compared to the proposed peaking simple cycle configuration. We are not aware of any carbon capture experience on simple cycle gas turbines with such low capacity factors, rendering it technically infeasible. However, a cost estimate for an amine absorption capture system is presented at the end of this absorption section.

Physical sorbents include propylene carbonate, Selexol™, Rectisol™, and Morphysorb™. Close contact between the scrubbing solvent and gas forces the CO_2 into solution. The process has been commercially used to remove CO_2 from natural gas production. Although the energy required regenerating the physical sorbents is much less than that required for chemical sorbents, they are less effective in dilute and low pressure gas streams such as combustion turbine

exhaust and would not be able to provide adequate reduction of CO_2. As such, this technology is considered technically infeasible.

Adsorption

Laboratory evaluations of natural zeolite, manufactured zeolite sieves, and activated carbon have all shown that these materials preferentially adsorb CO_2 over nitrogen, oxygen, and water vapor at elevated pressures. Although these materials show promise for CO_2 capture from high pressure gas streams, they are unsuited for low pressure combustion exhaust streams. Therefore, adsorption is considered technically infeasible.

Separation

Polymer-based membrane separation of CO_2 is currently under investigation. Currently, potential membrane materials are prone to chemical and thermal degradation. Like physical sorbents, they are less effective in dilute and low pressure gas streams such as combustion turbine exhaust. This technology is still experimental and not commercially available. Membrane technology is considered technically infeasible for this project.

In cryogenic separation of CO_2, the gas is cooled and compressed to condense CO_2. This process is only effective on dry gas streams with high CO_2 concentrations and is not technically feasible for the dilute gas streams from combustion exhaust.

Transportation and Sequestration

Provided CO_2 capture and compression could be reliably achieved, the high-volume stream must be transported by pipeline to long-term storage to a geologic formation capable of long-term storage. The U.S. Department of Energy National Energy Technology Laboratory (DOE-NETL) states:

"The majority of geologic formations considered for CO_2 storage, deep saline or depleted oil and gas reservoirs, are layers of porous rock underground that are "capped" by a layer or multiple layers of non-porous rock above them. Under high pressure, CO_2 turns to liquid and can move through a formation as a fluid. Once injected, the liquid CO_2 tends to be buoyant and will flow upward until it encounters a barrier of non-porous rock, which can trap the CO_2 and prevent further upward migration. Coal seams are another formation considered a viable option for geologic storage, and their storage process is slightly different. When CO_2 is injected into the formation, it is adsorbed onto the coal surfaces, and methane gas is released and produced in adjacent wells.

There are other mechanisms for CO_2 trapping as well: CO_2 molecules can dissolve in brine: react with minerals to form solid carbonates; or adsorb in the pores of the porous rock. The degree to which a specific underground formation is amenable to CO_2 storage can be difficult to discern."[1]

[1] DOE-NETL. *Carbon Sequestration: Storage*. http:///www.netl.doe.gov/technologies/carbon_seq/core_rd/storage.html

The Gulf Coast Carbon Center (GCCC) has identified numerous potential sites along the Texas Gulf Coast that may be suitable for sequestration, the capacity and reliability of these sites remains untested.[2] In particular, a modeling study of the Frio Formation in the Texas Gulf Coast conducted by the GCCC indicated long-term CO_2 loss from the geologic formation despite high intrinsic capacity and determined further study is required to determine the long-term capacity of geologic formations.[3]

4.2.3 *Step 3: Rank Remaining Control Technologies*

These remaining technologically and economically feasible options have been ranked based on their control of GHG from combustion turbines. Table 4-6 provides a summary of the remaining technologies.

TABLE 4-6: Ranking of Technically Feasible Emissions Reduction Options of Greenhouse Gases from Combustion Turbines

Emission Reduction Option	Performance Level (% control)	Rank (x)
Fuel selection	15% - 55%	1
Good combustion, operating and maintenance practices	5-25%	2
Inherently low emitting design	5-20%	3
Uncontrolled	--	--

4.2.4 *Step 4: Evaluate and Document Remaining Control Technologies*

4.2.4.1 *Carbon Capture and Sequestration*

Despite the technical infeasibility of CCS for the proposed project, TRPP evaluated the cost of carbon capture using MEA based on published methodologies. This analysis is shown in Table 4-7. The cost of capture and sequestration using MEA is approximately $89/ton of CO_2 removed.

This CCS cost analysis assumes that the carbon must be sequestered, and cannot be used in enhanced oil recovery (EOR). Because a peaking unit is only producing CO_2 a fraction of the year, and only for a few hours at a time, there is no market for that kind of CO_2 supply for EOR. The RPGS will be located on the Gulf Coast Oligocene brine formation (of which the Frio formation is a part). As an absolute best case scenario, the cost analysis for sequestration assumes that

[2] Susan Hovorka, et. al. University of Texas, Bureau of Economic Geology – Gulf Coast Carbon Center. *New Developments: Solved and Unsolved Questions Regarding Geologic Sequestration of CO_2 as a Greenhouse Gas Reduction Method.* GCCC Digital Publication #08-13. April 2008.
[3] Christine Doughty, et. al. University of Texas, Bureau of Economic Geology – Gulf Coast Carbon Center. *Capacity Investigation of Brine-bearing Sands of the Frio Formation for Geologic Sequestration of CO_2.* GCCC Digital Publication #01-03. 2001.

the Oligocene structure is capable of long term storage, despite contrary evidence from the Frio Project. The analysis further assumes that a suitable sequestration well can be drilled within 10 miles of the facility in the Oligocene structure.

The cost analysis also assumes a typical control level of 90% for the carbon capture system. In practice carbon capture will not be this high because the carbon capture system will not be operational during periods of start-up. Since TRPGS is a peaking facility, the amount of time it spends in start-up is not insignificant. As such, not capturing the CO_2 emissions generated during start-up reduces the effective carbon capture efficiency below the 90% typically claimed for carbon capture processes.

For comparison purposes, one could calculate the threshold value of cost effectiveness for CO_2e based on the relative cost effectiveness of control of a criteria pollutant at some threshold value per ton of pollutant removed and the major source threshold of 100 tpy. This approach is supported by USEPA's rulemaking under the "Tailoring Rule." Through rulemaking the USEPA has "tailored" greenhouse gasses such that 100,000 tons of CO_2e is equal to 100 tons of a criteria pollutant for the purpose of PSD applicability. So, by USEPA's own rulemaking construct. The cost of carbon capture alone would be equivalent to $89,000 per ton of criteria air pollutant. Based on this criterion, the CCS demonstration system for the Tenaska Roans Prairie Generating Station is found to be infeasible based on cost.

TABLE 4-7: MEA Capture Cost Estimate*

Item	Value
Basis	
Total Hours per year	2,920
Economic Life, years	20
Interest Rate (%) [1,2]	10
Source(s) Controlled	Three Gas Turbines
Nominal Generating Capacity (MW-gross)	665
Gross Nominal Generation (kWh/yr)	1,941,800,000
Capital Cost ($)	607,056,627
Total Annualized Cost ($)	102,432,806
Before Capture Annual Emissions (ton/yr)	1,278,052
Capture Efficiency	90%
Total CCS Cost ($/ton CO_2, 2012 dollars)	89

* A more detailed cost estimate table can be found in Table B-1 in Appendix B.

In addition to being economically infeasible, there are additional environmental costs associated with additional capture. The MEA system that would be most readily available requires additional energy representing approximately 15% of the load generated by the power plant. Therefore, to generate a comparable amount of net electricity, the facility would be emitting 15% more criteria pollutants such as NO_X, VOC, and particulate as well as hazardous air pollutants such as formaldehyde, which is also a highly reactive VOC (HRVOC) that contributes to ground-level ozone formation. Since this project is located near

the Houston ozone non-attainment area, reducing emissions of ozone precursors is more of a concern than reducing greenhouse gas emissions.

Finally, carbon sequestration has other potential environmental impacts that should be considered before declaring sequestration viable as BACT including:

- Impacts from brine displacement into fresh water aquifers or surface water;
- CO_2 leakage into underground or surface drinking water supplies resulting in acidification of water supplies; and
- Subsequent impacts to local flora and fauna.

4.2.4.2 *Inherently Low Emitting Design*

Fast start combined cycle (Siemens FP10 and Siemens FP30), reciprocating engines, aero-derivative simple cycle, and frame simple cycle turbines are still in consideration as inherently low emitting (ILE) design. For the following economic analysis, frame simple cycle turbines are considered as the base case. Table 4-8 below shows that the cost of avoided CO_2 emissions for these four alternative options at the maximum allowable peaking capacity factor of 33%. The detailed economic calculations for this cost of avoided CO_2 are shown in the confidential Appendix E.

TABLE 4-8 Cost of Avoided CO_2 for Generating Technologies at 33% Capacity Factor

Generating Technology	Cost of avoided CO_2 ($/ton)
Frame Simple Cycle	N/A[1]
Siemens FP30 & GE FE 60 Fast Start Combined Cycle	39.9
Siemens FP10 Fast Start Combined Cycle	215.8
Aero-derivative Simple Cycle	249.2
Reciprocating Engines	375.7

[1] Frame simple cycle turbines are the baseline for this comparison.

At the maximum annual capacity factor of 33% (approximately 2,920 hours of operation), the costs of avoided CO_2 for the fast start type 1 combined cycle turbines (Siemens FP 30 and GE FE 60) are significantly lower than that for the other fast start combined cycle, aero-derivative simple cycle and reciprocating engines. As such, fast start combined cycle type 2 (FP 10), aero-derivative simple cycle turbines, and reciprocating engines are eliminated due to the higher cost of avoided CO_2 emissions in comparison to the fast start type 1 combined cycle turbine for the stated business purpose.

Since the cost for avoided CO_2 for the fast start type 1 combined cycle turbines is $39.9/ton (or $39,900/ton equivalent to criteria pollutants) at the given capacity factor, it is also considered economically infeasible compared to frame simple cycle turbines for the stated business purpose.

4.2.4.3 *Fuel selection, good combustion, operation, and maintenance practices, and fuel preheating*

TRPP has determined that the remaining control technologies have no adverse impacts that require additional consideration or evaluation.

4.2.5 *Step 5: Select BACT*

TRPP proposes the following design and work practices as BACT for combustion turbines:

- Inherently low emitting design (Frame simple cycle turbine);
- Use of natural gas;
- Good combustion, operation and maintenance practices; and
- Installation of a fuel preheater.

BACT is proposed as three F class frame combustion turbines fueled by natural gas incorporating good combustion, operating, and maintenance practices. The proposed short-term quantitative BACT limits for each of the turbine options being considered are shown in Table 4-9 (applicable at an operational scenario of baseload for 85% of the operating hours and minimum load for the remaining 15%. Minimum load is different for each turbine (40.2% load for the Siemens, 50.3% load for the GE 7FA.04 and 47.9% load for the GE 7FA.05). The ultimate turbine model chosen will be selected based upon several operational and economic factors, including the total plant capacity that best fits expected power supply contract signed by TRPP.

Table 4-9 below shows the calculations demonstrating the mass emission rate of CO_2 for each of the three turbines in lb/MW-hr.

Table 4-9. CO_2 Mass Emission Rate Determination

Parameter	Units	SGT6-5000F	GE 7FA.05	GE 7FA.04
Full Load New and Clean Output at Summer Design Condition -- per Turbine	(MW)	231.1	204.5	168.7
Full Load New and Clean Output at Summer Design Condition-- Plant (3 turbines)	(MW)	693.4	613.5	506.1
Full Load New and Clean Heat Rate at Summer Design Condition	(Btu/kWhHHV)	10,053	9,972	10,144

Parameter	Units	SGT6-5000F	GE 7FA.05	GE 7FA.04
Assumed Percentage at Full Load Operation	(%)	85%	85%	85%
Min Load Definition	(MW)	93.0	91.5	93.2
	(% of Full Load)	40%	45%	55%
Min Load New and Clean Heat Rate at Summer Design Condition	(Btu/kWh HHV)	13,432	13,548	12,526
Assumed Percentage at Min Load Operation	(%)	15%	15%	15%
Blended Permitting Heat Rate	(Btu/kWh HHV)	10,560	10,509	10,502
CO_2 Fuel Intensity	(lb/MMBtu HHV)	119.5	119.5	119.5
Blended New and Clean CO_2 Emission Rate at Summer Conditions	(lb/MWh)	1,241	1,235	1,234
Degradation Margin	(%)	6%	6%	6%
Commercial Margin	(%)	2%	2%	2%
Blended Margined CO_2 Emission rate for permitting	**(lb/MWh)**	**1,365**	**1,358**	**1,357**

TRPP proposes an annual emission limit of 1,151,754 to 1,279,088 tpy of CO_2e for the turbines which includes emissions from maintenance, startup, and shutdown activities. The proposed emission limit is based on a 12-month rolling total basis as monitored by fuel use records and fuel heating value and carbon content. Based on these data, annual CO_2 emissions are calculated according to the technique put forth in 40 CFR 75 Appendix G Section 2.1. TRPP proposes a short-term emission rate limit of 1,355 to 1,363 lb CO_2/MWh_{gross} equivalent based on a 720-hour rolling average and which functionally equivalent frame turbine is selected based on the specific power supply contact signed. The proposed BACT limits were adjusted from "new and clean" emission rates due to two general factors: variability in equipment provider commercial guarantees and turbine performance degradation. Each is discussed in more detail below. As with the annual emission limit, compliance is monitored by fuel use records, fuel heating value and carbon content, and gross power generation. Based on these data, short-term CO_2 emissions are calculated according to the technique put forth in 40 CFR 75 Appendix G Section 2.1.

Equipment Provider Commercial Guarantees

For early stage project development, turbine original equipment manufacturers (OEMs) provide preliminary performance estimates – they are unable or unwilling to provide guaranteed values due to the number of technical, commercial, and contractual issues that are undefined. OEMs and engineering, procurement, and construction (EPC) contractors are unwilling to establish the guarantees until the final contract negotiations when all commercial issues become known such that they can assess and limit the overall risk of a particular project.

However, because TRPP intends to finance the project, these preliminary estimates will need to be converted to guarantees prior to financial closing and commissioning of the project. The prospective lenders will require that guaranteed figures be consistent with both the economic projections and the permitted emissions.

The guaranteed heat rate figures are likely to be higher than the preliminary estimates due to the following issues:

- The preliminary figures do not include test measurement uncertainty. Every measurement is the combination of the true value plus measurement error. Thus, there is inherent uncertainty in the measurement. This uncertainty has two parts: (1) systematic error (also known as bias or fixed error) which is a function of the particular measurement device type/vendor and installation and (2) random or statistical error which results from the scatter of repeated measurements using the same instrumentation. Since the specific CO_2 emissions are the result of several measurements and calculations, the total uncertainty will be the square root of the sum of the squares of the product of the individual measurement uncertainties and their respective sensitivities. In previous projects, total uncertainty was 1.0 to 1.5%. TRPP would expect something similar to be established for Roans Prairie as it appears to be typical total uncertainty for the types of instrumentation used and which the OEMs are willing to accept. The definitions for test uncertainty and the gas turbine performance test codes can be found in ASME 19.1 and 22, respectively.
- The detailed project scope (the basis for the guarantee) is not fully defined. A number of design elements are not fully decided until detailed engineering. For example: determination of vendor and geometry of inlet filter media, its associated pressure drop, and the resultant effect on performance.
- Each combustion turbine is unique. During commissioning, the OEM observes the combustion dynamics and tunes the unit performance by adjusting the base load firing curve, the base load inlet guide vane angle, and other control parameters. The OEM is expected to include safety margin in its final guarantee values to cover this issue, once all the performance and emission guarantee parameters are defined.
- Guaranteeing CO_2 emissions is a new requirement for the OEMs/EPCs and, as such, adds risk to their commercial offering. In order to manage this risk, they are likely to be conservative by including margin in their guaranteed value.

Given the typical value of uncertainty of 1.0-1.5%, plus the other unquantified issues, TRPP elected to use a 2.0% margin for converting the current preliminary estimates to guarantee-able values.

CT Performance Degradation

Even under the best possible operating conditions, the performance of a gas turbine is subjected to deterioration due to compressor fouling and corrosion,

inlet filter clogging, thermal fatigue and oxidization of hot-gas path components such as combustion liners and turbine blades. Collectively, these mechanisms reduce the electrical output and efficiency (i.e., increase the heat rate) of combustion turbines. The heat rate increase causes a corresponding increase in the specific CO_2 emission rate.

Performance degradation can be grouped into two types: non-recoverable and recoverable. The contributions from these two types and the time period over which they occur is a function of the plant operating profile – i.e., the capacity factor and the number of starts as dictated by market forces. OEMs define the timing for major maintenance in terms of "equivalent operation hours" (EOH). The formulation of EOH varies among the OEMs, but conceptually consists of actual operating hours plus number of starts times a multiplier. The starts multiplier is generally relatively large because the thermal cycling of the unit during a start has a much larger impact on long term operations than an hour spent at steady-state operations.

Non-recoverable degradation occurs and continues throughout the operating life of the combustion turbine. OEMs provide a projection of this impact versus EOH. These trends consist of relatively rapid initial heat rate degradation of 0.3 to 0.5% per 1,000 EOH for the first few thousand EOH which then flattens to a long term degradation rate of 0.02 to 0.05% per 1,000 EOH. The long term impact is a 2.5 to 3.0% increase in heat rate at high EOH over new and clean performance. The figure below depicts curves from two major OEMs:

Figure 4-1. Non-Recoverable Heat Rate Degradation

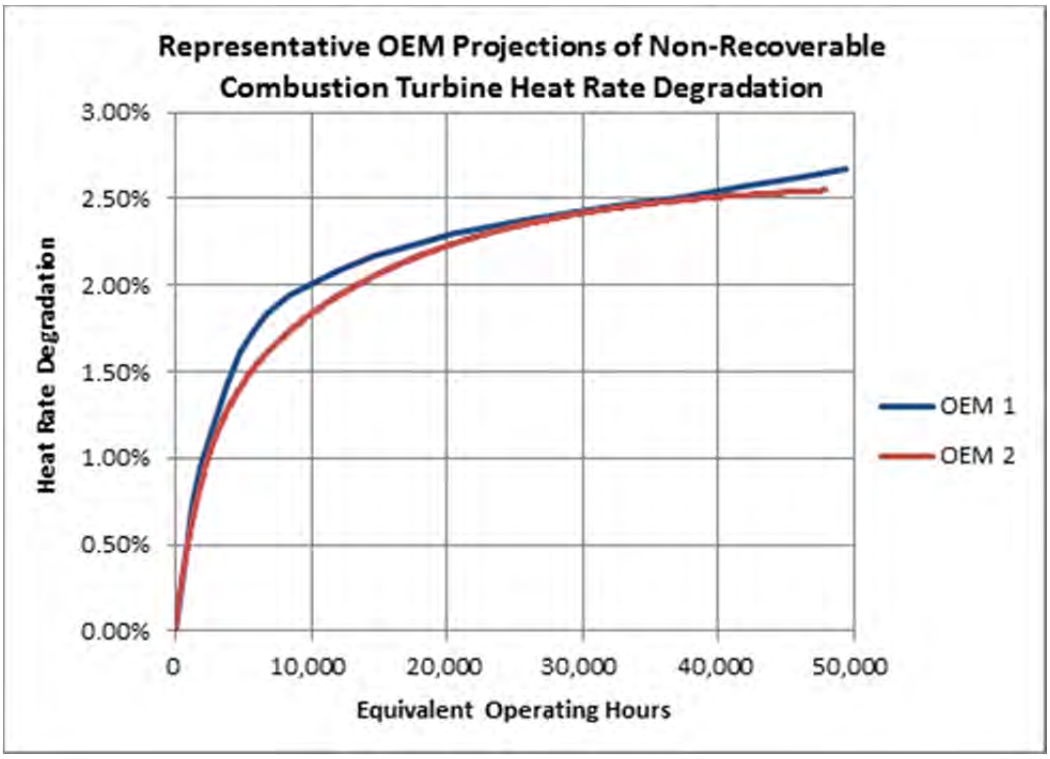

Recoverable degradation is that which may be recovered through compressor washes and the performance of major maintenance, and accumulates over time between major maintenance intervals. The rate of change is minimized by performing compressor washes. When an off-line wash and major maintenance are performed, the unit heat rate should return to the new and clean heat rate plus the non-recoverable degradation (described above). As a result, total degradation (non-recoverable plus recoverable) appears as a saw-tooth type curve, as shown in Figure 4-2. However, there is significant uncertainty in whether the performance will be recovered in practice. For example, TRPP has experienced essentially no performance recovery after major maintenance for a few units in its fleet.

Figure 4-2. Recoverable Thermal Efficiency Degradation

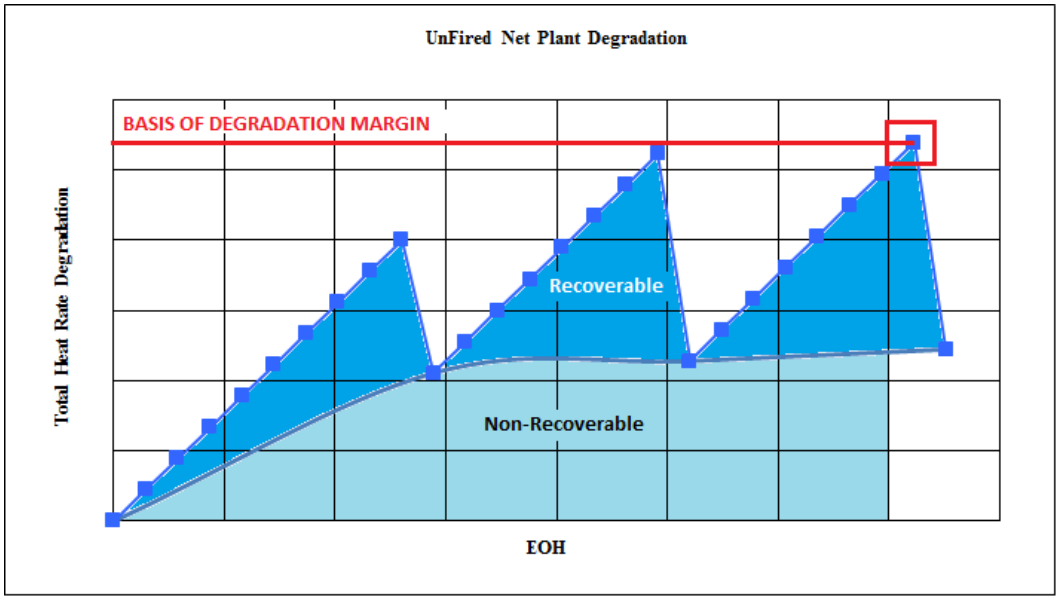

Based on vendor curves and operating fleet experience (including plant performance tests executed before and after major maintenance), TRPP has determined that recoverable degradation can reach 3 to 4% between maintenance intervals.

As previously mentioned, the individual contributions from these types of degradation are dependent on the run profile. However, TRPP cannot definitively predict the future market conditions for the life of the plant. Thus, TRPP modeled a matrix of plausible run profiles (with various combinations of starts and capacity factors) to compute the degradation profile. Then, TRPP selected the highest heat rate for the worst year from the worst run profile (the highest peak of the saw tooth) curve. This value was nominally 6% above new and clean performance. This result makes sense because the individual contributions of non-recoverable degradation and recoverable degradation can be 2.5 to 3% and 3 to 4%, respectively, for high EOH at the end of a run (nearing a major maintenance event).

Combining both adjustment factors, variability from the vendor guarantee (2%), and performance degradation (6%); TRPP proposes that an 8% factor be applied to the new and clean thermal efficiency provided by the turbine manufacturers, as shown in Table 4-9.

4.3 NATURAL GAS FUGITIVE EMISSIONS

4.3.1 Step 1: Identify All Available Control Technologies

TRPP performed a search of the USEPA RBLC for fugitive emissions from gas fired turbines for power generation; a summary of these results is shown in Table C-2 in Appendix C. Based on that and a review of the available literature, TRPP has identified the following control options for natural-gas fugitive emissions:

- Good operations and preventative maintenance plan;
- Implementing an AVO program to identify and repair leaks; and
- Use of leakless components.

4.3.2 Step 2: Eliminate Technically Infeasible Options

Of the identified control technologies, only leakless components are technologically infeasible. Leakless components are only currently used in industries that use highly hazardous gases and liquids. Given that the environmental impact of GHGs have not yet been fully quantified, and GHGs do not present any acute hazards, consideration of leakless components as BACT is unwarranted.

4.3.3 Step 3: Rank Remaining Control Technologies

***TABLE 4-10**: Ranking of Technically Feasible Emissions Reduction Options of Greenhouse Gases from Natural Gas Fugitives*

Emission Reduction Option	Performance Level (% control)	Rank (x)
AVO Program	93-97%%	1
Good operating and maintenance practices	5-25%	2
Uncontrolled	--	--

4.3.4 Step 4: Evaluate and Document Remaining Control Technologies

TRPP has determined that the control technologies identified in Table 4-10 have no adverse impacts that require additional consideration or evaluation.

4.3.5 Step 5: Select BACT

TRPP proposes the following design and work practices as BACT for fugitive components:

- Implementing an AVO inspection program; and
- Good operation and maintenance practices.

TRPP proposes an emission limit of 70 tpy of CO_2e (12-month rolling average) for the facility. Compliance with be demonstrated by proper documentation of the maintenance and AVO programs.

4.4 *DIESEL FIRED EMERGENCY ENGINES*

4.4.1 *Step 1: Identify All Available Control Technologies*

TRPP performed a search of the USEPA RBLC for diesel fired emergency engines and the results are shown in Table C-3 in Appendix C. The BACT identified for these emergency generators were good combustion practices or fuel-efficient design. Based on this information, TRPP has identified the following control options for emergency generators and fire pump engines:

- Good combustion practices, operation and maintenance;
- Alternative fuels; and
- Carbon Capture and Sequestration.

4.4.1.1 *Good Combustion Practices, Operation and Maintenance*

Proper combustion, operation and maintenance ensure the boilers maintain optimal efficiency and perform as designed. These operational practices include:

- Combustion optimization;
- Operation procedures including startup, shutdown, and malfunction;
- Instrumentation and controls;
- Reduce air leakages; and
- Preventative maintenance.

4.4.1.2 *Alternative Fuels*

The use of fuels like natural gas or propane may reduce carbon emissions by changing the carbon to energy density of the fuel. The use of these fuels does not meet the purpose of the emergency engines, namely being able to supply power quickly and reliably in case of an emergency; necessitating a self-contained, stable and independent fuel supply. As such, lower carbon to energy density fuels do not meet the business purpose of the emergency engines, and are not considered for BACT.

4.4.1.3 *Carbon Capture and Sequestration*

Carbon capture and sequestration is discussed in Section 4.2.1.4.

4.4.2 *Step 2: Eliminate Technically Infeasible Options*

4.4.2.1 *Carbon Capture and Sequestration*

Carbon capture and sequestration on a highly intermittent process like an emergency generator is not technically feasible. The process equipment used in carbon capture requires significant start-up time, such that it would not be operational in time to capture emissions from the engine which will primarily be used for short periods of time.

4.4.3 *Step 3: Rank Remaining Control Technologies*

The remaining technologically feasible options have been ranked based on their GHG emissions reductions performance levels. Table 4-11 provides a summary of the remaining technologies.

TABLE 4-11: Ranking of Technically Feasible Emissions Reduction Options of Greenhouse Gases from Emergency Engines

Emission Reduction Option	Performance Level (% control)	Rank (x)
Good combustion, operating and maintenance practices	5-25%	1
None	--	--

4.4.4 *Step 4: Evaluate and Document Remaining Control Technologies*

TRPP has determined that good combustion, operating and maintenance practices have no adverse impacts that require additional consideration or evaluation.

4.4.5 *Step 5: Select BACT*

TRPP proposes the following design and work practices as BACT for the emergency generators:

- Good combustion, operation and maintenance practices.

TRPP proposes a short-term emission limit of 164 pounds of CO_2e per MMBtu (12-month rolling average) for each diesel engine including emissions from maintenance, startup, and shutdown activities. This value of 180 was based on the EPA emission factor of 163.6 lb/MMBtu for diesel engines. Compliance with be demonstrated by monitoring fuel usage and fuel higher heating value. CO_2 emissions will be calculated using the EPA emission factor from table 40 CFR 98 C-1.

4.5 FUGITIVE SF_6 EMISSIONS FROM ELECTRICAL COMPONENTS

4.5.1 Step 1: Identify All Available Control Technologies

TRPP performed a search of the USEPA RBLC for SF_6 containing circuit breakers in addition to reviewing the literature on emissions reductions methods. A summary of the RBLC results is included in Table C-4 in Appendix C. Based on this information, TRPP has identified the following control options for SF_6 containing circuit breakers:

- Use of materials other than SF_6 (air blast or dielectric oil);
- Use of state-of-the-art circuit breakers that are gas-tight and require minimal SF_6;
- Good operations and preventative maintenance plan; and
- Implementing an AVO program to identify and repair leaks.

4.5.2 Step 2: Eliminate Technically Infeasible Options

4.5.2.1 Alternative Circuit Breaker Insulation Material

No alternative materials exist that are as easily implemented as SF_6; per the EPA's Report "SF_6 emission Reduction Partnership for Electric Power Systems" (http://www.epa.gov/electricpower-sf6/),

> *"No clear alternative exists for this gas that is used extensively in circuit breakers, gas-insulated substations, and switch gear due to its inertness and dielectric properties."*

4.5.3 Step 3: Rank Remaining Control Technologies

The remaining technologically feasible options have been ranked based on their GHG emissions reductions performance levels. Table 4-12 provides a summary of the remaining technologies.

TABLE 4-12: Ranking of Technically Feasible Emissions Reduction Options of Greenhouse Gases from Fugitive SF_6 Emissions

Emission Reduction Option	Performance Level (% control)	Rank (x)
AVO program	30%	1
Good operating and preventative maintenance practices	10%	2
None	--	--

4.5.4 *Step 4: Evaluate and Document Remaining Control Technologies*

TRPP has determined that the control technologies identified in table 4-12 have no adverse impacts that require additional consideration or evaluation.

4.5.5 *Step 5: Select BACT*

TRPP proposes the following design and work practices as BACT for the SF_6 circuit breakers:

- Implementing an AVO program;
- Use of good operations and preventative maintenance practices; and

TRPP proposes an annual emission limit of 210 tpy of CO_{2e} (12-month rolling average) for all SF_6 containing components at the facility. Compliance with be demonstrated by appropriate documentation of the AVO and preventative maintenance plans.

5.0 GREENHOUSE GAS EMISSION CALCULATIONS

This section summarizes the methodologies and emission factors used to calculate the PTE GHG emissions for each emission source included in this project. As previously mentioned, this project involves the construction of an all new facility to include three new simple cycle gas turbines, one diesel engine powered emergency generator, and one diesel engine powered fire pump. GHG emissions from the new units were calculated for purposes of determining PSD applicability and for determining if the facility would require a Title V operating permit based on its GHG annual emission rate. In addition to the GHG generated from combustion of natural gas, the fugitive emissions resulting from leakage of SF_6 used in electrical distribution equipment and fugitive losses of natural gas are also included.

Plans call for the installation of three identical turbines; However, three different models of turbines are under consideration, and therefore, this discussion includes three different sets of turbine emission rates. Detailed emissions calculations for the overall project are presented in Appendix B. Project summary emissions for the three different turbine scenarios are shown in Tables B-2 through B-4. Emissions calculations for each individual turbine are shown in Tables B-5 through B-7. Emissions calculations for the other units including MSS emissions are shown in Tables B-8 through B-12.

5.1 POTENTIAL EMISSIONS CALCULATIONS

5.1.1 Combustion Turbines

Potential emissions for each of the combustion turbines were calculated based on 2,920 hours of operation. The limit on annual capacity factor is based on the proposed Carbon Pollution Standard for New Power Plants (NSPS Subpart TTTT) for defining the operations of simple cycle turbines used as peaking units. The new turbines will be available to operate at the maximum rated capacities shown in Table 5-1. The emission factors used for calculating potential GHG emissions from the new combustion turbines are summarized in Table 5-2. The global warming potentials from Part 98, table A-2 are used to convert the GHG pollutants into terms of CO_2e, as provided in Table 5-3. The GHG pollutants and the total GHG emissions stated in terms of CO_2e for the three groups of turbines are shown in the Table 5-4.

To determine the CO_2 emission factor for the turbine, TRPP developed a hypothetical gas composition based on the probable supply contract with the natural gas provider. The composition represents a fuel with relatively low methane content and high NGL content, but which still meets the tariff limits of 1,150 Btu/SCF higher heating value and (less than) 0.2 gallon C5+ NGLs per thousand standard cubic feet (GPMs). The resulting CO_2 intensity of this hypothetical fuel is 119.5 lb CO_2/MMBtu (54.2 kg CO_2/MMBtu). Determination of this emission factor is provided in Appendix D.

TABLE 5-1: Turbine Maximum Design Data per Turbine

Turbine Manufacturer and Model Number	Rated Capacity (MW)[2]	"New and Clean" Thermal Efficiency (Btu/kW-hr, HHV)[2]	Marginal[1] Thermal Efficiency (Btu/kW-hr, HHV)[2]	Maximum Heat Input (MMBtu/Hr)
Siemens SGT6-5000F(5ee)	231.2	9,778	10,561	2,441
GE 7FA.05	227.6	9,672	10,446	2,378
GE 7FA.04	207.0	9,833	10,620	2,198

[1] *Includes an 8% adjustment above new and clean to account for non-standard conditions, and performance degradation.*
[2] *These performance numbers were taken at an Ambient Temperature of 7F and humidity of 53%.*

TABLE 5-2: Natural Gas-fired Turbine GHG Emission Factors

Pollutant	Emission Factor (kg/MMBtu)	Global Warming Potential (100 Yr)	Basis
CO_2	54.22	1	Based on representative fuel sample data described above
CH_4	0.001	21	40 CFR Part 98, Subpart C, Table C-2& Subpart A, Table A-1
N_2O	0.0001	310	40 CFR Part 98, Subpart C, Table C-2& Subpart A, Table A-1

TABLE 5-3: Total GHG (CO_2e) Emissions from the Natural Gas Turbines

Greenhouse Gas Emissions from Turbines (tpy)			
Pollutant	Three (3) Siemens - SGT6-5000F(5ee)	Three (3) GE – 7FA.05	Three (3) GE – 7FA.04
CO_2	1,277,862	1,244,443	1,150,650
CH_4	23.57	22.95	21.22
N_2O	2.36	2.30	2.12
GHG (CO_2e)	1,279,088	1,245,636	1,151,754

5.1.2 *Diesel Fired Emergency Engines*

The proposed project includes two diesel emergency engines. The first emergency engine with a rating of 2,937 horsepower will drive a generator to supply electrical power in the event of the loss from the local utility. The second emergency engine with a rating of 575 horsepower will drive the fire water pump. The maximum hourly heat input rate for each engine was estimated based on the maximum hourly fuel consumption rate supplied by the prospective engine manufacturers (Appendix D) and the higher heating value of 0.138 MMBtu per gallon from Table C-1 from Subpart C of 40 CFR Part 98. The GHG emissions were then calculated using the default GHG emission factors from Subpart C of 40 CFR Part 98 shown in Table 5-5 for No. 2 distillate fuel oil.

TABLE 5-4: Emergency Engine GHG Emission Factors

Pollutant	Emission Factor (kg/MMBtu)	Basis
CO_2	73.96	40 CFR Part 98, Subpart C, Table C-1
CH_4	3.0E-03	40 CFR Part 98, Subpart C, Table C-2
N_2O	6.0E-04	40 CFR Part 98, Subpart C, Table C-2

PTE for the emergency engines is based on 100 hours per year each as prescribed in Mr. John Seitz' memo to EPA regional directors[4]. The total potential GHG emissions from the emergency engines are shown in the Table 5-6.

TABLE 5-5: GHG Emissions from the Emergency Engines

GHG Pollutant	Potential Emissions (tpy)
CO_2	189.01
CH_4	0.008
N_2O	0.0015
GHG (CO_2e)	189.65

5.1.3 *Fugitive SF_6 Emissions from Electrical Equipment*

SF_6 is used in high voltage electrical equipment as an insulator and arc quenching medium. Fugitive emissions of SF_6 may result due to equipment leakage. Because SF_6 is a very potent greenhouse gas its emissions have been included in the facility-wide GHG emission estimation.

The fugitive emissions were calculated for each device as the product of the mass of SF_6 contained in each piece of equipment, the likelihood of an equipment leak (0.5 percent per year), and the amount of SF_6 lost due to leakage (defined as 100% of the device capacity). The total estimated SF_6 fugitive loss was found by summing the losses for each device type and number estimated for use at the facility.

The likelihood of fugitive emissions from SF_6 containing equipment such as circuit breakers was estimated based on the annual leakage percentage standard for new equipment established by the International Electrotechnical Commission (IEC) Standard 62271-1 from October 2007 of 0.5 percent. For purposes of estimating emissions, the entire capacity of a leaking device was assumed to be lost.

To convert the mass of SF_6 lost into terms of CO_2e, the global warming potential from Part 98, Subpart A was used and is provided in Table 5-7. The resulting CO_2e emissions from leaking high voltage electrical equipment are shown in Table 5-8.

[4] United States Environmental Protection Agency. 1995. Memorandum from Mr. John S. Seitz, Director of the Office Air Quality Planning and Standards. *Potential to Emit for MACT Standards – Guidance on Timing Issues.* May 16, 1995.

TABLE 5-6: GHG Emissions and Global Warming Potential of Sulfur Hexafluoride

Pollutant	SF_6 Emissions (tpy)	Global Warming Potential (100 Yr)	GHG (CO_2e) Emissions (tpy)	Basis
SF_6	0.00875	23,900	209.13	40 CFR Part 98, Subpart A, Table A-1

5.1.4 *GHG Emissions from Fugitive Natural Gas Losses due to Leaks and Equipment Maintenance*

Additional GHG emissions result from fugitive leaks of natural gas from the equipment piping and from losses that occur during maintenance activities. Fugitive natural gas losses were estimated using *Synthetic Organic Chemical Manufacturing Industry (SOCMI) Fugitive Equipment Leak Factors* from the October 2000 Draft TCEQ Technical Guidance Package, and the type and number of various pieces of equipment and fittings. The losses from the equipment gas piping were estimated based on the volume of gas contained in the piping and the number of times per year the piping will be opened during maintenance. Detailed emission calculations are included in Appendix B. The GHG emissions from fugitive leaks and from maintenance are included in the facility summary shown below as part of Tables 5-7 to 5-9.

5.1.5 *Summary of GHG Emissions from Project*

The total GHG potential emissions from the project are summarized in Tables, 5-9, 5-10, and 5-11 for each of the three different models of turbines under consideration.

TABLE 5-7: Summary of Potential Annual Project Emissions with Siemens Turbines

Pollutant	Single (one) Siemens Turbine (tpy)	Total for Three Siemens Turbines (tpy)	Emergency Generator Engine (tpy)	Emergency Fire Pump Engine (tpy)	Fugitive Losses of SF_6 from Electrical Breakers (tpy)	Turbine Maintenance (tpy)	Fugitive Natural Gas Losses (tpy)	Total Project Emissions (tpy)
CO_2	425,954	1,277,862	156.27	32.74	-	0.0063	0.18	1,278,052
CH_4	7.86	23.57	0.01	0.0013	-	0.12	3.30	26.99
N_2O	0.79	2.36	0.0013	0.00027	-	-	-	2.36
SF_6	-	-	-	-	0.01	-	-	0.01
GHG (CO_2e)	426,363	1,279,088	156.80	32.85	209.13	2.42	69.46	1,279,559

TABLE 5-8: Summary of Potential Annual Project Emissions with GE-7FA.05 Turbines

Pollutant	Single (one) GE-7FA.05 Turbine (tpy)	Total for Three GE-7FA.05 Turbines (tpy)	Emergency Generator Engine (tpy)	Emergency Fire Pump Engine (tpy)	Fugitive Losses of SF_6 from Electrical Breakers (tpy)	Turbine Maintenance (tpy)	Fugitive Natural Gas Losses (tpy)	Total Project Emissions (tpy)
CO_2	414,814	1,244,443	156.27	32.74	-	0.01	0.18	1,244,632
CH_4	7.65	22.95	0.01	0.0013	-	0.12	3.30	26.37
N_2O	0.77	2.30	0.0013	0.00027	-	-	-	2.30
SF_6	-	-	-	-	0.01	-	-	0.01
GHG (CO_2e)	415,212	1,245,636	156.81	32.85	209.13	2.42	69.46	1,246,107

TABLE 5-9: Summary of Potential Annual Project Emissions with GE-7FA.04 Turbines

Pollutant	Single (one) GE-7FA.04 Turbine (tpy)	Total for Three GE-7FA.04 Turbines (tpy)	Emergency Generator Engine (tpy)	Emergency Fire Pump Engine (tpy)	Fugitive Losses of SF_6 from Electrical Breakers (tpy)	Turbine Maintenance (tpy)	Fugitive Natural Gas Losses (tpy)	Total Project Emissions (tpy)
CO_2	383,550	1,150,650	156.27	32.74	-	0.01	0.18	1,150,839
CH_4	7.07	21.22	0.01	0.0013	-	0.12	3.30	24.64
N_2O	0.71	2.12	0.0013	0.00027	-	-	-	2.12
SF_6	-	-	-	-	0.01	-	-	0.01
GHG (CO_2e)	383,918	1,151,754	156.80	32.85	209.13	2.42	69.46	1,152,224

6.0 ADDITIONAL REQUIREMENTS UNDER PSD

An analysis of ambient air quality impacts is not provided with this application as there are no National Ambient Air Quality Standards (NAAQS) or PSD increments established for GHG (per EPA's *PSD and Title V Permitting Guidance for Greenhouse Gases*).

Since there are no NAAQS or PSD increments for GHGs, the requirements in sections 52.21(k) and 51.166(k) of EPA's regulations to demonstrate that a source does not cause contribute to a violation of the NAAQS are not applicable to GHGs. Therefore, there is no requirement to conduct dispersion modeling or ambient monitoring for CO_2 or GHGs.

Additionally, an analysis of Air Quality Related Values (AQRV) is not provided because GHG does not contribute to regional haze or terrestrial/aquatic acid deposition.

A pre-construction monitoring analysis for GHG is not being provided with this application in accordance with EPA's recommendations (per EPA's *PSD and Title V Permitting Guidance for Greenhouse Gases*):

EPA does not consider it necessary for applicants to gather monitoring data to assess ambient air quality for GHGs under section 52.21(m)(1)(ii), section 51.166(m)(1)(ii), or similar provisions that may be contained in state rules based on EPA's rules. GHGs do not affect "ambient air quality" in the sense that EPA intended when these parts of EPA's rules were initially drafted. Considering the nature of GHG emissions and their global impacts, EPA does not believe it is practical or appropriate to expect permitting authorities to collect monitoring data for purpose of assessing ambient air impacts of GHGs

6.1 IMPACT EVALUATION PURSUANT TO FEDERAL ACTION

6.1.1 Federal Endangered Species Act

Section 7 of the Federal Endangered Species Act (ESA) requires that any activity funded, authorized, or implemented by a federal agency does not jeopardize the continued existence of a listed species or result in the destruction or adverse modification of designated critical habitat (16 U.S.C. §1536). Under 40 CFR §402, federal agencies are required to prepare a biological assessment to determine the impact of the proposed action on endangered species. TRPP conducted this biological assessment and determined that the project will not adversely impact any federal or state-listed threatened and endangered species or critical habitat for these species. A copy of the biological assessment will be provided to USEPA Region 6 under separate cover.

6.1.2 National Historic Preservation Act

Section 106 of the National Historic Preservation Act (NHPA) requires federal agencies to address the effects of their actions on historic properties and afford the Advisory Council for Historic Preservation (ACHP) the opportunity to

comment on the impact to historic properties and preservation as result of federal action. TRPP conducted site survey in accordance with the survey methods defined in the Department of Interior Standard and Guidelines and the guidelines of the Council of Texas Archaeologists. Based on this survey, no sites of historical or cultural significance were identified that would be affected by this project. A copy of the historical and cultural resource assessment will be provided to USEPA Region 6 under separate cover.

TCEQ Permit Application Forms

Appendix A

July 2013
Project No. 0189555

Environmental Resources Management
15810 Park Ten Place, Suite 300
Houston, Texas 77084
(281) 600-1000

TCEQ Use Only

TCEQ Core Data Form

For detailed instructions regarding completion of this form, please read the Core Data Form Instructions or call 512-239-5175.

SECTION I: General Information

1. Reason for Submission *(If other is checked please describe in space provided)*

☒ New Permit, Registration or Authorization *(Core Data Form should be submitted with the program application)*

☐ Renewal *(Core Data Form should be submitted with the renewal form)* ☐ Other

2. Attachments Describe Any Attachments: *(ex. Title V Application, Waste Transporter Application, etc.)*

☒ Yes ☐ No PSD Permit Application

3. Customer Reference Number *(if issued)*	Follow this link to search for CN or RN numbers in Central Registry**	4. Regulated Entity Reference Number *(if issued)*
CN		RN 0

SECTION II: Customer Information

5. Effective Date for Customer Information Updates (mm/dd/yyyy) 7/22/2013

6. Customer Role (Proposed or Actual) – *as it relates to the Regulated Entity listed on this form. Please check only one of the following:*

☐ Owner ☐ Operator ☒ Owner & Operator
☐ Occupational Licensee ☐ Responsible Party ☐ Voluntary Cleanup Applicant ☐ Other: _____

7. General Customer Information

☒ New Customer ☐ Update to Customer Information ☐ Change in Regulated Entity Ownership
☐ Change in Legal Name (Verifiable with the Texas Secretary of State) ☐ No Change**

If "No Change" and Section I is complete, skip to Section III – Regulated Entity Information.

8. Type of Customer:	☒ Corporation	☐ Individual	☐ Sole Proprietorship- D.B.A
☐ City Government	☐ County Government	☐ Federal Government	☐ State Government
☐ Other Government	☐ General Partnership	☐ Limited Partnership	☐ Other: _____

9. Customer Legal Name *(If an individual, print last name first: ex: Doe, John)*	*If new Customer, enter previous Customer below*	*End Date:*
Tenaska Roans Prairie Partners, LLC		

10. Mailing Address:								
	1044 N. 115th Street, Suite 400							
	City	Omaha	State	NE	ZIP	68154	ZIP + 4	4446

11. Country Mailing Information *(if outside USA)*	12. E-Mail Address *(if applicable)*

13. Telephone Number	14. Extension or Code	15. Fax Number *(if applicable)*
(402) 938-1661		(402) 691-9530

16. Federal Tax ID *(9 digits)*	17. TX State Franchise Tax ID *(11 digits)*	18. DUNS Number *(if applicable)*	19. TX SOS Filing Number *(if applicable)*
462009341	TBD	78708590	

20. Number of Employees ☒ 0-20 ☐ 21-100 ☐ 101-250 ☐ 251-500 ☐ 501 and higher

21. Independently Owned and Operated? ☒ Yes ☐ No

SECTION III: Regulated Entity Information

22. General Regulated Entity Information *(If 'New Regulated Entity" is selected below this form should be accompanied by a permit application)*

☒ New Regulated Entity ☐ Update to Regulated Entity Name ☐ Update to Regulated Entity Information ☐ No Change** *(See below)*

**If "NO CHANGE" is checked and Section I is complete, skip to Section IV, Preparer Information.

23. Regulated Entity Name *(name of the site where the regulated action is taking place)*

Tenaska Roans Prairie Generating Station

24. Street Address of the Regulated Entity: *(No P.O. Boxes)*	1044 N. 115th Street, Suite 400							
	City	Omaha	**State**	NE	**ZIP**	68154	**ZIP + 4**	4446
25. Mailing Address:	1044 N. 115th Street, Suite 400							
	City	Omaha	**State**	NE	**ZIP**	68154	**ZIP + 4**	4446

26. E-Mail Address:	lcarlson@tenaska.com

27. Telephone Number	**28. Extension or Code**	**29. Fax Number** *(if applicable)*
(402) 938-1661		(402) 691-9530

30. Primary SIC Code (4 digits)	**31. Secondary SIC Code** (4 digits)	**32. Primary NAICS Code** (5 or 6 digits)	**33. Secondary NAICS Code** (5 or 6 digits)
4911		221112	

34. What is the Primary Business of this entity? *(Please do not repeat the SIC or NAICS description.)*

Electricity Generation

Questions 34 – 37 address geographic location. Please refer to the instructions for applicability.

35. Description to Physical Location:	From College Station, Texas, head northeast on Farm to Market Rd 60/University Dr. toward Jane St. Turn right onto TX-6 Frontage S. Turn left onto Harvey Rd. Slight right onto TX-10 E. Site is approximately 22.4 miles down TX-30 E on the right hand side.

36. Nearest City	**County**	**State**	**Nearest ZIP Code**
Shiro	Grimes	TX	77873

37. Latitude (N) In Decimal:	30.587816		**38. Longitude (W) In Decimal:**	-95.927297	
Degrees	Minutes	Seconds	Degrees	Minutes	Seconds
30	35	16.1376	-95	55	38.2686

39. TCEQ Programs and ID Numbers Check all Programs and write in the permits/registration numbers that will be affected by the updates submitted on this form or the updates may not be made. If your Program is not listed, check other and write it in. See the Core Data Form instructions for additional guidance.

☐ Dam Safety	☐ Districts	☐ Edwards Aquifer	☐ Industrial Hazardous Waste	☐ Municipal Solid Waste
☒ New Source Review – Air	☐ OSSF	☐ Petroleum Storage Tank	☐ PWS	☐ Sludge
☐ Stormwater	☐ Title V – Air	☐ Tires	☐ Used Oil	☐ Utilities
☐ Voluntary Cleanup	☐ Waste Water	☐ Wastewater Agriculture	☐ Water Rights	☐ Other:

SECTION IV: Preparer Information

40. Name:	ERM	**41. Title:**	Consultant

42. Telephone Number	**43. Ext./Code**	**44. Fax Number**	**45. E-Mail Address**
(281) 600-1000	1019	(281) 600-1001	peter.belmonte@erm.com

SECTION V: Authorized Signature

46. By my signature below, I certify, to the best of my knowledge, that the information provided in this form is true and complete, and that I have signature authority to submit this form on behalf of the entity specified in Section II, Field 9 and/or as required for the updates to the ID numbers identified in field 39.

(See the Core Data Form instructions for more information on who should sign this form.)

Company:	Tenaska Roan's Prairie Partners, LLC	**Job Title:**	Sr Vice President, Engineering and Construction	
Name *(In Print)* :	Nicholas Borman		**Phone:**	(402) 691-9500
Signature:	N Borman		**Date:**	July 19, 2013

Texas Commission on Environmental Quality
Form PI-1 General Application for
Air Preconstruction Permit and Amendment

Important Note: The agency **requires** that a Core Data Form be submitted on all incoming applications unless a Regulated Entity and Customer Reference Number have been issued *and* no core data information has changed. For more information regarding the Core Data Form, call (512) 239-5175 or go to www.tceq.texas.gov/permitting/central_registry/guidance.html.

I. Applicant Information		
A. Company or Other Legal Name: Tenaska Roans Prairie Partners, LLC		
Texas Secretary of State Charter/Registration Number (*if applicable*):		
B. Company Official Contact Name: Mr. Greg Kunkel		
Title: Vice President, Environmental Affairs		
Mailing Address: 1044 N. 115th Street, Suite 400		
City: Omaha	State: NE	ZIP Code: 68154-4446
Telephone No.: 402-691-9500	Fax No.: 402-691-9530	E-mail Address: gkunkel@tenaska.com
C. Technical Contact Name: Mr. Larry Carlson		
Title: Director, Air Programs		
Company Name: Tenaska, Inc.		
Mailing Address: 1044 N. 115th Street, Suite 400		
City: Omaha	State: NE	ZIP Code: 68154-4446
Telephone No.: 402-938-1661	Fax No.: 402-691-9530	E-mail Address: lcarlson@tenaska.com
D. Site Name: Tenaska Roans Prairie Generating Station		
E. Area Name/Type of Facility: Electric Generating Station		☒ Permanent ☐ Portable
F. Principal Company Product or Business: Electricity Generation		
Principal Standard Industrial Classification Code (SIC): 4911		
Principal North American Industry Classification System (NAICS): 221112		
G. Projected Start of Construction Date: January 2015		
Projected Start of Operation Date: June 2016		
H. Facility and Site Location Information (If no street address, provide clear driving directions to the site in writing.):		
From College Station, Texas, head northeast on Farm to Market Rd 60/University Dr. toward Jane St. Turn right onto TX-6 Frontage S. Turn left onto Harvey Rd. Slight right onto TX-30 E. Site is approximately 22.4 miles down TX-30 E on the right hand side.		
City/Town: Shiro	County: Grimes	ZIP Code: 77873
Latitude (nearest second): 30° 35' 16" N	Longitude (nearest second): 95° 55' 38" W	

Texas Commission on Environmental Quality
Form PI-1 General Application for
Air Preconstruction Permit and Amendment

I. Applicant Information (continued)	
I. Account Identification Number (leave blank if new site or facility):	
J. Core Data Form.	
Is the Core Data Form (Form 10400) attached? If *No*, provide customer reference number and regulated entity number (complete K and L).	☒ YES ☐ NO
K. Customer Reference Number (CN):	
L. Regulated Entity Number (RN):	
II. General Information	
A. Is confidential information submitted with this application? If *Yes*, mark each **confidential** page **confidential** in large red letters at the bottom of each page.	☒ YES ☐ NO
B. Is this application in response to an investigation or enforcement action? If *Yes*, attach a copy of any correspondence from the agency.	☐ YES ☒ NO
C. Number of New Jobs: 0-20	
D. Provide the name of the State Senator and State Representative and district numbers for this facility site:	
Senator: Charles Schwertner	District No.: 5
Representative: Lois W. Kolkhorst	District No.: 13
III. Type of Permit Action Requested	
A. Mark the appropriate box indicating what type of action is requested. Initial ☒ Amendment ☐ Revision (30 TAC 116.116(e)) ☐ Change of Location ☐ Relocation ☐	
B. Permit Number (if existing): TBD	
C. Permit Type: Mark the appropriate box indicating what type of permit is requested. *(check all that apply, skip for change of location)* Construction ☒ Flexible ☐ Multiple Plant ☐ Nonattainment ☐ Prevention of Significant Deterioration ☒ Hazardous Air Pollutant Major Source ☐ Plant-Wide Applicability Limit ☐ Other:_____	
D. Is a permit renewal application being submitted in conjunction with this amendment in accordance with 30 TAC 116.315(c).	☐ YES ☒ NO

III. Type of Permit Action Requested (continued)			
E. Is this application for a change of location of previously permitted facilities? If Yes, complete III.E.1 - III.E.4.			☐ YES ☒ NO
1. Current Location of Facility (If no street address, provide clear driving directions to the site in writing.):			
Street Address:			
City:	County:	ZIP Code:	
2. Proposed Location of Facility (If no street address, provide clear driving directions to the site in writing.):			
Street Address:			
City:	County:	ZIP Code:	
3. Will the proposed facility, site, and plot plan meet all current technical requirements of the permit special conditions? If *No*, attach detailed information.			☐ YES ☐ NO
4. Is the site where the facility is moving considered a major source of criteria pollutants or HAPs?			☐ YES ☐ NO
F. Consolidation into this Permit: List any standard permits, exemptions or permits by rule to be consolidated into this permit including those for planned maintenance, startup, and shutdown.			
List:			
G. Are you permitting planned maintenance, startup, and shutdown emissions? If *Yes*, attach information on any changes to emissions under this application as specified in VII and VIII.			☒ YES ☐ NO
H. Federal Operating Permit Requirements (30 TAC Chapter 122 Applicability)			
Is this facility located at a site required to obtain a federal operating permit? If *Yes*, list all associated permit number(s), attach pages as needed).			☒ YES ☐ NO ☐ To be determined
Associated Permit No (s.): TBD			
1. Identify the requirements of 30 TAC Chapter 122 that will be triggered if this application is approved. FOP Significant Revision ☐ FOP Minor ☐ Application for an FOP Revision ☐ To Be Determined ☐ Operational Flexibility/Off-Permit Notification ☐ Streamlined Revision for GOP ☐ None ☒			

III. Type of Permit Action Requested (continued)	
H. Federal Operating Permit Requirements (30 TAC Chapter 122 Applicability) *(continued)*	
2. Identify the type(s) of FOP(s) issued and/or FOP application(s) submitted/pending for the site. (check all that apply)	
GOP Issued ☐ GOP application/revision application submitted or under APD review ☐	
SOP Issued ☐ SOP application/revision application submitted or under APD review ☐	
IV. Public Notice Applicability	
A. Is this a new permit application or a change of location application?	☒ YES ☐ NO
B. Is this application for a concrete batch plant? If Yes, complete V.C.1 – V.C.2.	☐ YES ☒ NO
C. Is this an application for a major modification of a PSD, nonattainment, FCAA 112(g) permit, or exceedance of a PAL permit?	☐ YES ☒ NO
D. Is this application for a PSD or major modification of a PSD located within 100 kilometers or less of an affected state or Class I Area?	☐ YES ☒ NO
If *Yes*, list the affected state(s) and/or Class I Area(s).	
E. Is this a state permit amendment application? If Yes, complete IV.E.1. – IV.E.3. --- NO	
1. Is there any change in character of emissions in this application?	☐ YES ☐ NO
2. Is there a new air contaminant in this application?	☐ YES ☐ NO
3. Do the facilities handle, load, unload, dry, manufacture, or process grain, seed, legumes, or vegetables fibers (agricultural facilities)?	☐ YES ☐ NO
F. List the total annual emission increases associated with the application (*list* **all** *that apply and attach additional sheets as needed*):	
Volatile Organic Compounds (VOC): 40.96 tpy	
Sulfur Dioxide (SO_2): 13.61 tpy	
Carbon Monoxide (CO): 354.10 tpy	
Nitrogen Oxides (NO_x): 375.32 tpy	
Particulate Matter (PM): 44.39 tpy	
PM_{10} microns or less (PM_{10}): 44.39 tpy	
$PM_{2.5}$ microns or less ($PM_{2.5}$): 44.39 tpy	
Sulfuric Acid Mist (H_2SO_4): 2.34 tpy	
Lead (Pb): 0.046 tpy	
Hazardous Air Pollutants (HAPs): 4.60 tpy	
Other speciated air contaminants **not** listed above: CO_2 – 1,278,052 tpy; CO_2e – 1,279,559 tpy	

Texas Commission on Environmental Quality
Form PI-1 General Application for
Air Preconstruction Permit and Amendment

V. Public Notice Information (complete if applicable)		
A. Public Notice Contact Name: Ms. Christie Couvillion		
Title: Sr. Environmental Specialist		
Mailing Address: 1044 N. 115th Street, Suite 400		
City: Omaha	State: NE	ZIP Code: 68154-4446
Telephone No.: 402-691-9500		
B. Name of the Public Place: Navasota Public Library		
Physical Address (No P.O. Boxes): 1411 E. Washington Ave.		
City: Navasota	County: Grimes	ZIP Code: 77868
The public place has granted authorization to place the application for public viewing and copying.		☒ YES ☐ NO
The public place has internet access available for the public.		☒ YES ☐ NO
C. Concrete Batch Plants, PSD, and Nonattainment Permits		
1. County Judge Information (For Concrete Batch Plants and PSD and/or Nonattainment Permits) for this facility site.		
The Honorable: Betty Shiflett		
Mailing Address: P.O. Box 160		
City: Anderson	State: Texas	ZIP Code: 77830
2. Is the facility located in a municipality or an extraterritorial jurisdiction of a municipality? *(For Concrete Batch Plants)*		☐ YES ☐ NO
Presiding Officers Name(s): N/A		
Title:		
Mailing Address:		
City:	State:	ZIP Code:
3. Provide the name, mailing address of the chief executive of the city for the location where the facility is or will be located.		
Chief Executive: Mayor Gail Sowell		
Mailing Address: P.O. Box 592		
City: Anderson	State: Texas	ZIP Code: 77830

V. Public Notice Information (complete if applicable) (continued)		
3. Provide the name, mailing address of the Indian Governing Body for the location where the facility is or will be located. *(continued)*		
Name of the Indian Governing Body: N/A		
Title:		
Mailing Address:		
City:	State:	ZIP Code:
D. Bilingual Notice		
Is a bilingual program **required** by the Texas Education Code in the School District?		☒ YES ☐ NO
Are the children who attend either the elementary school or the middle school closest to your facility eligible to be enrolled in a bilingual program provided by the district?		☒ YES ☐ NO
If *Yes*, list which languages are required by the bilingual program? Spanish		
VI. Small Business Classification (Required)		
A. Does this company (including parent companies and subsidiary companies) have fewer than 100 employees or less than $6 million in annual gross receipts?		☐ YES ☒ NO
B. Is the site a major stationary source for federal air quality permitting?		☒ YES ☐ NO
C. Are the site emissions of any regulated air pollutant greater than or equal to 50 tpy?		☒ YES ☐ NO
D. Are the site emissions of all regulated air pollutants combined less than 75 tpy?		☐ YES ☒ NO
VII. Technical Information		
A. The following information must be submitted with your Form PI-1 (this is just a checklist to make sure you have included everything)		
1. Current Area Map ☒		
2. Plot Plan ☒		
3. Existing Authorizations ☒		
4. Process Flow Diagram ☒		
5. Process Description ☒		
6. Maximum Emissions Data and Calculations ☒		
7. Air Permit Application Tables ☒		
a. Table 1(a) (Form 10153) entitled, Emission Point Summary ☒		
b. Table 2 (Form 10155) entitled, Material Balance ☒		
c. Other equipment, process or control device tables ☒		

VII. Technical Information				
B. Are any schools located within 3,000 feet of this facility?				☐ YES ☒ NO
C. Maximum Operating Schedule:				
Hours: 24	Day(s): 365	Week(s): 52	Year(s): 2,920 hrs/yr	
Seasonal Operation? If Yes, please describe in the space provide below.				☐ YES ☒ NO
D. Have the planned MSS emissions been previously submitted as part of an emissions inventory?				☐ YES ☒ NO
Provide a list of each planned MSS facility or related activity and indicate which years the MSS activities have been included in the emissions inventories. Attach pages as needed.				
E. Does this application involve any air contaminants for which a *disaster review* is required?				☐ YES ☒ NO
F. Does this application include a pollutant of concern on the *Air Pollutant Watch List (APWL)*?				☐ YES ☒ NO
VIII. State Regulatory Requirements **Applicants must demonstrate compliance with all applicable state regulations to obtain a permit or amendment**. *The application must contain detailed attachments addressing applicability or non applicability; identify state regulations; show how requirements are met; and include compliance demonstrations.*				
A. Will the emissions from the proposed facility protect public health and welfare, and comply with all rules and regulations of the TCEQ?				☒ YES ☐ NO
B. Will emissions of significant air contaminants from the facility be measured?				☒ YES ☐ NO
C. Is the Best Available Control Technology (BACT) demonstration attached?				☒ YES ☐ NO
D. Will the proposed facilities achieve the performance represented in the permit application as demonstrated through recordkeeping, monitoring, stack testing, or other applicable methods?				☒ YES ☐ NO
IX. Federal Regulatory Requirements **Applicants must demonstrate compliance with all applicable federal regulations to obtain a permit or amendment** *The application must contain detailed attachments addressing applicability or non applicability; identify federal regulation subparts; show how requirements are met; and include compliance demonstrations.*				
A. Does Title 40 Code of Federal Regulations Part 60, (40 CFR Part 60) New Source Performance Standard (NSPS) apply to a facility in this application?				☒ YES ☐ NO
B. Does 40 CFR Part 61, National Emissions Standard for Hazardous Air Pollutants (NESHAP) apply to a facility in this application?				☐ YES ☒ NO
C. Does 40 CFR Part 63, Maximum Achievable Control Technology (MACT) standard apply to a facility in this application?				☒ YES ☐ NO

IX. Federal Regulatory Requirements **Applicants must demonstrate compliance with all applicable federal regulations to obtain a permit or amendment *The application must contain detailed attachments addressing applicability or non applicability; identify federal regulation subparts; show how requirements are met; and include compliance demonstrations.***		
D.	Do nonattainment permitting requirements apply to this application?	☐ YES ☒ NO
E.	Do prevention of significant deterioration permitting requirements apply to this application?	☒ YES ☐ NO
F.	Do Hazardous Air Pollutant Major Source [FCAA 112(g)] requirements apply to this application?	☐ YES ☒ NO
G.	Is a Plant-wide Applicability Limit permit being requested?	☐ YES ☒ NO
X. Professional Engineer (P.E.) Seal		
Is the estimated capital cost of the project greater than $2 million dollars?		☒ YES ☐ NO
If *Yes*, submit the application under the seal of a Texas licensed P.E.		
XI. Permit Fee Information		
Check, Money Order, Transaction Number ,ePay Voucher Number: N/A		Fee Amount: N/A
Company name on check:		Paid online?: ☐ YES ☐ NO
Is a copy of the check or money order attached to the original submittal of this application?		☐ YES ☐ NO ☒ N/A
Is a Table 30 (Form 10196) entitled, Estimated Capital Cost and Fee Verification, attached?		☒ YES ☐ NO ☐ N/A

Texas Commission on Environmental Quality
Form PI-1 General Application for
Air Preconstruction Permit and Amendment

XII. Delinquent Fees and Penalties
This form **will not be processed** until all delinquent fees and/or penalties owed to the TCEQ or the Office of the Attorney General on behalf of the TCEQ is paid in accordance with the Delinquent Fee and Penalty Protocol. For more information regarding Delinquent Fees and Penalties, go to the TCEQ Web site at: www.tceq.texas.gov/agency/delin/index.html.
XIII. Signature
The signature below confirms that I have knowledge of the facts included in this application and that these facts are true and correct to the best of my knowledge and belief. I further state that to the best of my knowledge and belief, the project for which application is made will not in any way violate any provision of the Texas Water Code (TWC), Chapter 7, Texas Clean Air Act (TCAA), as amended, or any of the air quality rules and regulations of the Texas Commission on Environmental Quality or any local governmental ordinance or resolution enacted pursuant to the TCAA I further state that I understand my signature indicates that this application meets all applicable nonattainment, prevention of significant deterioration, or major source of hazardous air pollutant permitting requirements. The signature further signifies awareness that intentionally or knowingly making or causing to be made false material statements or representations in the application is a criminal offense subject to criminal penalties.
Name: Nicholas Borman, Sr Vice President, Engineering and Construction
Signature: N Borman *Original Signature Required*
Date: July 19, 2013

Texas Commission on Environmental Quality
Form PI-1 General Application for
Air Preconstruction Permit and Amendment

Important Note: The agency **requires** that a Core Data Form be submitted on all incoming applications unless a Regulated Entity and Customer Reference Number have been issued *and* no core data information has changed. For more information regarding the Core Data Form, call (512) 239-5175 or go to www.tceq.texas.gov/permitting/central_registry/guidance.html.

I. Applicant Information		
A. Company or Other Legal Name: Tenaska Roans Prairie Partners, LLC		
Texas Secretary of State Charter/Registration Number (*if applicable*):		
B. Company Official Contact Name: Mr. Greg Kunkel		
Title: Vice President, Environmental Affairs		
Mailing Address: 1044 N. 115th Street, Suite 400		
City: Omaha	State: NE	ZIP Code: 68154-4446
Telephone No.: 402-691-9500	Fax No.: 402-691-9530	E-mail Address: gkunkel@tenaska.com
C. Technical Contact Name: Mr. Larry Carlson		
Title: Director, Air Programs		
Company Name: Tenaska, Inc.		
Mailing Address: 1044 N. 115th Street, Suite 400		
City: Omaha	State: NE	ZIP Code: 68154-4446
Telephone No.: 402-938-1661	Fax No.: 402-691-9530	E-mail Address: lcarlson@tenaska.com
D. Site Name: Tenaska Roans Prairie Generating Station		
E. Area Name/Type of Facility: Electric Generating Station		☒ Permanent ☐ Portable
F. Principal Company Product or Business: Electricity Generation		
Principal Standard Industrial Classification Code (SIC): 4911		
Principal North American Industry Classification System (NAICS): 221112		
G. Projected Start of Construction Date: January 2015		
Projected Start of Operation Date: June 2016		
H. Facility and Site Location Information (If no street address, provide clear driving directions to the site in writing.):		
From College Station, Texas, head northeast on Farm to Market Rd 60/University Dr. toward Jane St. Turn right onto TX-6 Frontage S. Turn left onto Harvey Rd. Slight right onto TX-30 E. Site is approximately 22.4 miles down TX-30 E on the right hand side.		
City/Town: Shiro	County: Grimes	ZIP Code: 77873
Latitude (nearest second): 30° 35' 16" N	Longitude (nearest second): 95° 55' 38" W	

Texas Commission on Environmental Quality
Form PI-1 General Application for
Air Preconstruction Permit and Amendment

I. Applicant Information (continued)	
I. Account Identification Number (leave blank if new site or facility):	
J. Core Data Form.	
Is the Core Data Form (Form 10400) attached? If *No*, provide customer reference number and regulated entity number (complete K and L).	☒ YES ☐ NO
K. Customer Reference Number (CN):	
L. Regulated Entity Number (RN):	
II. General Information	
A. Is confidential information submitted with this application? If *Yes*, mark each **confidential** page **confidential** in large red letters at the bottom of each page.	☒ YES ☐ NO
B. Is this application in response to an investigation or enforcement action? If *Yes*, attach a copy of any correspondence from the agency.	☐ YES ☒ NO
C. Number of New Jobs: 0-20	
D. Provide the name of the State Senator and State Representative and district numbers for this facility site:	
Senator: Charles Schwertner	District No.: 5
Representative: Lois W. Kolkhorst	District No.: 13
III. Type of Permit Action Requested	
A. Mark the appropriate box indicating what type of action is requested. Initial ☒ Amendment ☐ Revision (30 TAC 116.116(e)) ☐ Change of Location ☐ Relocation ☐	
B. Permit Number (if existing): TBD	
C. Permit Type: Mark the appropriate box indicating what type of permit is requested. *(check all that apply, skip for change of location)* Construction ☒ Flexible ☐ Multiple Plant ☐ Nonattainment ☐ Prevention of Significant Deterioration ☒ Hazardous Air Pollutant Major Source ☐ Plant-Wide Applicability Limit ☐ Other:_____	
D. Is a permit renewal application being submitted in conjunction with this amendment in accordance with 30 TAC 116.315(c).	☐ YES ☒ NO

III. Type of Permit Action Requested (continued)			
E. Is this application for a change of location of previously permitted facilities? If Yes, complete III.E.1 - III.E.4.			☐ YES ☒ NO
1. Current Location of Facility (If no street address, provide clear driving directions to the site in writing.):			
Street Address:			
City:	County:	ZIP Code:	
2. Proposed Location of Facility (If no street address, provide clear driving directions to the site in writing.):			
Street Address:			
City:	County:	ZIP Code:	
3. Will the proposed facility, site, and plot plan meet all current technical requirements of the permit special conditions? If *No*, attach detailed information.			☐ YES ☐ NO
4. Is the site where the facility is moving considered a major source of criteria pollutants or HAPs?			☐ YES ☐ NO
F. Consolidation into this Permit: List any standard permits, exemptions or permits by rule to be consolidated into this permit including those for planned maintenance, startup, and shutdown.			
List:			
G. Are you permitting planned maintenance, startup, and shutdown emissions? If *Yes*, attach information on any changes to emissions under this application as specified in VII and VIII.			☒ YES ☐ NO
H. Federal Operating Permit Requirements (30 TAC Chapter 122 Applicability)			
Is this facility located at a site required to obtain a federal operating permit? If *Yes*, list all associated permit number(s), attach pages as needed).			☒ YES ☐ NO ☐ To be determined
Associated Permit No (s.): TBD			
1. Identify the requirements of 30 TAC Chapter 122 that will be triggered if this application is approved.			
FOP Significant Revision ☐ FOP Minor ☐ Application for an FOP Revision ☐ To Be Determined ☐			
Operational Flexibility/Off-Permit Notification ☐ Streamlined Revision for GOP ☐ None ☒			

III. Type of Permit Action Requested (continued)	
H. Federal Operating Permit Requirements (30 TAC Chapter 122 Applicability) *(continued)*	
2. Identify the type(s) of FOP(s) issued and/or FOP application(s) submitted/pending for the site. (check all that apply)	
GOP Issued ☐ GOP application/revision application submitted or under APD review ☐	
SOP Issued ☐ SOP application/revision application submitted or under APD review ☐	
IV. Public Notice Applicability	
A. Is this a new permit application or a change of location application?	☒ YES ☐ NO
B. Is this application for a concrete batch plant? If Yes, complete V.C.1 – V.C.2.	☐ YES ☒ NO
C. Is this an application for a major modification of a PSD, nonattainment, FCAA 112(g) permit, or exceedance of a PAL permit?	☐ YES ☒ NO
D. Is this application for a PSD or major modification of a PSD located within 100 kilometers or less of an affected state or Class I Area?	☐ YES ☒ NO
If *Yes*, list the affected state(s) and/or Class I Area(s).	
E. Is this a state permit amendment application? If Yes, complete IV.E.1. – IV.E.3. --- NO	
1. Is there any change in character of emissions in this application?	☐ YES ☐ NO
2. Is there a new air contaminant in this application?	☐ YES ☐ NO
3. Do the facilities handle, load, unload, dry, manufacture, or process grain, seed, legumes, or vegetables fibers (agricultural facilities)?	☐ YES ☐ NO
F. List the total annual emission increases associated with the application (*list* **all** *that apply and attach additional sheets as needed*):	
Volatile Organic Compounds (VOC): 16.63 tpy	
Sulfur Dioxide (SO_2): 32.65 tpy	
Carbon Monoxide (CO): 381.24 tpy	
Nitrogen Oxides (NO_x): 370.04 tpy	
Particulate Matter (PM): 45.29 tpy	
PM_{10} microns or less (PM_{10}): 45.29 tpy	
$PM_{2.5}$ microns or less ($PM_{2.5}$): 45.29 tpy	
Sulfuric Acid Mist (H_2SO_4): 1.34 tpy	
Lead (Pb): 0.045 tpy	
Hazardous Air Pollutants (HAPs): 4.48 tpy	
Other speciated air contaminants **not** listed above: CO_2 – 1,244,632 tpy; CO_2e – 1,246,107 tpy	

V. Public Notice Information (complete if applicable)		
A. Public Notice Contact Name: Ms. Christie Couvillion		
Title: Sr. Environmental Specialist		
Mailing Address: 1044 N. 115th Street, Suite 400		
City: Omaha	State: NE	ZIP Code: 68154-4446
Telephone No.: 402-691-9500		
B. Name of the Public Place: Navasota Public Library		
Physical Address (No P.O. Boxes): 1411 E. Washington Ave.		
City: Navasota	County: Grimes	ZIP Code: 77868
The public place has granted authorization to place the application for public viewing and copying.		☒ YES ☐ NO
The public place has internet access available for the public.		☒ YES ☐ NO
C. Concrete Batch Plants, PSD, and Nonattainment Permits		
1. County Judge Information (For Concrete Batch Plants and PSD and/or Nonattainment Permits) for this facility site.		
The Honorable: Betty Shiflett		
Mailing Address: P.O. Box 160		
City: Anderson	State: Texas	ZIP Code: 77830
2. Is the facility located in a municipality or an extraterritorial jurisdiction of a municipality? *(For Concrete Batch Plants)*		☐ YES ☐ NO
Presiding Officers Name(s): N/A		
Title:		
Mailing Address:		
City:	State:	ZIP Code:
3. Provide the name, mailing address of the chief executive of the city for the location where the facility is or will be located.		
Chief Executive: Mayor Gail Sowell		
Mailing Address: P.O. Box 592		
City: Anderson	State: Texas	ZIP Code: 77830

V. Public Notice Information (complete if applicable) (continued)		
3. Provide the name, mailing address of the Indian Governing Body for the location where the facility is or will be located. *(continued)*		
Name of the Indian Governing Body: N/A		
Title:		
Mailing Address:		
City:	State:	ZIP Code:
D. Bilingual Notice		
Is a bilingual program **required** by the Texas Education Code in the School District?		☒ YES ☐ NO
Are the children who attend either the elementary school or the middle school closest to your facility eligible to be enrolled in a bilingual program provided by the district?		☒ YES ☐ NO
If *Yes*, list which languages are required by the bilingual program? Spanish		
VI. Small Business Classification (Required)		
A. Does this company (including parent companies and subsidiary companies) have fewer than 100 employees or less than $6 million in annual gross receipts?		☐ YES ☒ NO
B. Is the site a major stationary source for federal air quality permitting?		☒ YES ☐ NO
C. Are the site emissions of any regulated air pollutant greater than or equal to 50 tpy?		☒ YES ☐ NO
D. Are the site emissions of all regulated air pollutants combined less than 75 tpy?		☐ YES ☒ NO
VII. Technical Information		
A. The following information must be submitted with your Form PI-1 (this is just a checklist to make sure you have included everything)		
1. Current Area Map ☒		
2. Plot Plan ☒		
3. Existing Authorizations ☒		
4. Process Flow Diagram ☒		
5. Process Description ☒		
6. Maximum Emissions Data and Calculations ☒		
7. Air Permit Application Tables ☒		
a. Table 1(a) (Form 10153) entitled, Emission Point Summary ☒		
b. Table 2 (Form 10155) entitled, Material Balance ☒		
c. Other equipment, process or control device tables ☒		

VII. Technical Information				
B. Are any schools located within 3,000 feet of this facility?				☐ YES ☒ NO
C. Maximum Operating Schedule:				
Hours: 24	Day(s): 365	Week(s): 52	Year(s): 2,920 hrs/yr	
Seasonal Operation? If Yes, please describe in the space provide below.				☐ YES ☒ NO
D. Have the planned MSS emissions been previously submitted as part of an emissions inventory?				☐ YES ☒ NO
Provide a list of each planned MSS facility or related activity and indicate which years the MSS activities have been included in the emissions inventories. Attach pages as needed.				
E. Does this application involve any air contaminants for which a *disaster review* is required?				☐ YES ☒ NO
F. Does this application include a pollutant of concern on the *Air Pollutant Watch List (APWL)*?				☐ YES ☒ NO
VIII. State Regulatory Requirements **Applicants must demonstrate compliance with all applicable state regulations to obtain a permit or amendment**. *The application must contain detailed attachments addressing applicability or non applicability; identify state regulations; show how requirements are met; and include compliance demonstrations.*				
A. Will the emissions from the proposed facility protect public health and welfare, and comply with all rules and regulations of the TCEQ?				☒ YES ☐ NO
B. Will emissions of significant air contaminants from the facility be measured?				☒ YES ☐ NO
C. Is the Best Available Control Technology (BACT) demonstration attached?				☒ YES ☐ NO
D. Will the proposed facilities achieve the performance represented in the permit application as demonstrated through recordkeeping, monitoring, stack testing, or other applicable methods?				☒ YES ☐ NO
IX. Federal Regulatory Requirements **Applicants must demonstrate compliance with all applicable federal regulations to obtain a permit or amendment** *The application must contain detailed attachments addressing applicability or non applicability; identify federal regulation subparts; show how requirements are met; and include compliance demonstrations.*				
A. Does Title 40 Code of Federal Regulations Part 60, (40 CFR Part 60) New Source Performance Standard (NSPS) apply to a facility in this application?				☒ YES ☐ NO
B. Does 40 CFR Part 61, National Emissions Standard for Hazardous Air Pollutants (NESHAP) apply to a facility in this application?				☐ YES ☒ NO
C. Does 40 CFR Part 63, Maximum Achievable Control Technology (MACT) standard apply to a facility in this application?				☒ YES ☐ NO

IX. Federal Regulatory Requirements **Applicants must demonstrate compliance with all applicable federal regulations to obtain a permit or amendment *The application must contain detailed attachments addressing applicability or non applicability; identify federal regulation subparts; show how requirements are met; and include compliance demonstrations.***		
D.	Do nonattainment permitting requirements apply to this application?	☐ YES ☒ NO
E.	Do prevention of significant deterioration permitting requirements apply to this application?	☒ YES ☐ NO
F.	Do Hazardous Air Pollutant Major Source [FCAA 112(g)] requirements apply to this application?	☐ YES ☒ NO
G.	Is a Plant-wide Applicability Limit permit being requested?	☐ YES ☒ NO
X. Professional Engineer (P.E.) Seal		
Is the estimated capital cost of the project greater than $2 million dollars?		☒ YES ☐ NO
If *Yes*, submit the application under the seal of a Texas licensed P.E.		
XI. Permit Fee Information		
Check, Money Order, Transaction Number ,ePay Voucher Number: N/A		Fee Amount: N/A
Company name on check:		Paid online?: ☐ YES ☐ NO
Is a copy of the check or money order attached to the original submittal of this application?		☐ YES ☐ NO ☒ N/A
Is a Table 30 (Form 10196) entitled, Estimated Capital Cost and Fee Verification, attached?		☒ YES ☐ NO ☐ N/A

Texas Commission on Environmental Quality
Form PI-1 General Application for
Air Preconstruction Permit and Amendment

XII. Delinquent Fees and Penalties
This form **will not be processed** until all delinquent fees and/or penalties owed to the TCEQ or the Office of the Attorney General on behalf of the TCEQ is paid in accordance with the Delinquent Fee and Penalty Protocol. For more information regarding Delinquent Fees and Penalties, go to the TCEQ Web site at: www.tceq.texas.gov/agency/delin/index.html.
XIII. Signature
The signature below confirms that I have knowledge of the facts included in this application and that these facts are true and correct to the best of my knowledge and belief. I further state that to the best of my knowledge and belief, the project for which application is made will not in any way violate any provision of the Texas Water Code (TWC), Chapter 7, Texas Clean Air Act (TCAA), as amended, or any of the air quality rules and regulations of the Texas Commission on Environmental Quality or any local governmental ordinance or resolution enacted pursuant to the TCAA I further state that I understand my signature indicates that this application meets all applicable nonattainment, prevention of significant deterioration, or major source of hazardous air pollutant permitting requirements. The signature further signifies awareness that intentionally or knowingly making or causing to be made false material statements or representations in the application is a criminal offense subject to criminal penalties.
Name: Nicholas Borman, Sr Vice President, Engineering and Construction
Signature: N. Borman *Original Signature Required*
Date: July 19, 2013

Texas Commission on Environmental Quality
Form PI-1 General Application for
Air Preconstruction Permit and Amendment

Important Note: The agency **requires** that a Core Data Form be submitted on all incoming applications unless a Regulated Entity and Customer Reference Number have been issued *and* no core data information has changed. For more information regarding the Core Data Form, call (512) 239-5175 or go to www.tceq.texas.gov/permitting/central_registry/guidance.html.

I. Applicant Information		
A. Company or Other Legal Name: Tenaska Roans Prairie Partners, LLC		
Texas Secretary of State Charter/Registration Number (*if applicable*):		
B. Company Official Contact Name: Mr. Greg Kunkel		
Title: Vice President, Environmental Affairs		
Mailing Address: 1044 N. 115th Street, Suite 400		
City: Omaha	State: NE	ZIP Code: 68154-4446
Telephone No.: 402-691-9500	Fax No.: 402-691-9530	E-mail Address: gkunkel@tenaska.com
C. Technical Contact Name: Mr. Larry Carlson		
Title: Director, Air Programs		
Company Name: Tenaska, Inc.		
Mailing Address: 1044 N. 115th Street, Suite 400		
City: Omaha	State: NE	ZIP Code: 68154-4446
Telephone No.: 402-938-1661	Fax No.: 402-691-9530	E-mail Address: lcarlson@tenaska.com
D. Site Name: Tenaska Roans Prairie Generating Station		
E. Area Name/Type of Facility: Electric Generating Station		☒ Permanent ☐ Portable
F. Principal Company Product or Business: Electricity Generation		
Principal Standard Industrial Classification Code (SIC): 4911		
Principal North American Industry Classification System (NAICS): 221112		
G. Projected Start of Construction Date: January 2015		
Projected Start of Operation Date: June 2016		
H. Facility and Site Location Information (If no street address, provide clear driving directions to the site in writing.):		
From College Station, Texas, head northeast on Farm to Market Rd 60/University Dr. toward Jane St. Turn right onto TX-6 Frontage S. Turn left onto Harvey Rd. Slight right onto TX-30 E. Site is approximately 22.4 miles down TX-30 E on the right hand side.		
City/Town: Shiro	County: Grimes	ZIP Code: 77873
Latitude (nearest second): 30° 35' 16" N	Longitude (nearest second): 95° 55' 38" W	

I. Applicant Information (continued)	
I. Account Identification Number (leave blank if new site or facility):	
J. Core Data Form.	
Is the Core Data Form (Form 10400) attached? If *No*, provide customer reference number and regulated entity number (complete K and L).	☒ YES ☐ NO
K. Customer Reference Number (CN):	
L. Regulated Entity Number (RN):	
II. General Information	
A. Is confidential information submitted with this application? If *Yes*, mark each **confidential** page **confidential** in large red letters at the bottom of each page.	☒ YES ☐ NO
B. Is this application in response to an investigation or enforcement action? If *Yes*, attach a copy of any correspondence from the agency.	☐ YES ☒ NO
C. Number of New Jobs: 0-20	
D. Provide the name of the State Senator and State Representative and district numbers for this facility site:	
Senator: Charles Schwertner	District No.: 5
Representative: Lois W. Kolkhorst	District No.: 13
III. Type of Permit Action Requested	
A. Mark the appropriate box indicating what type of action is requested. Initial ☒ Amendment ☐ Revision (30 TAC 116.116(e)) ☐ Change of Location ☐ Relocation ☐	
B. Permit Number (if existing): TBD	
C. Permit Type: Mark the appropriate box indicating what type of permit is requested. *(check all that apply, skip for change of location)* Construction ☒ Flexible ☐ Multiple Plant ☐ Nonattainment ☐ Prevention of Significant Deterioration ☒ Hazardous Air Pollutant Major Source ☐ Plant-Wide Applicability Limit ☐ Other:_____	
D. Is a permit renewal application being submitted in conjunction with this amendment in accordance with 30 TAC 116.315(c).	☐ YES ☒ NO

III. Type of Permit Action Requested (continued)			
E. Is this application for a change of location of previously permitted facilities? If Yes, complete III.E.1 - III.E.4.			☐ YES ☒ NO
1. Current Location of Facility (If no street address, provide clear driving directions to the site in writing.):			
Street Address:			
City:	County:	ZIP Code:	
2. Proposed Location of Facility (If no street address, provide clear driving directions to the site in writing.):			
Street Address:			
City:	County:	ZIP Code:	
3. Will the proposed facility, site, and plot plan meet all current technical requirements of the permit special conditions? If *No*, attach detailed information.			☐ YES ☐ NO
4. Is the site where the facility is moving considered a major source of criteria pollutants or HAPs?			☐ YES ☐ NO
F. Consolidation into this Permit: List any standard permits, exemptions or permits by rule to be consolidated into this permit including those for planned maintenance, startup, and shutdown.			
List:			
G. Are you permitting planned maintenance, startup, and shutdown emissions? If *Yes*, attach information on any changes to emissions under this application as specified in VII and VIII.			☒ YES ☐ NO
H. Federal Operating Permit Requirements (30 TAC Chapter 122 Applicability)			
Is this facility located at a site required to obtain a federal operating permit? If *Yes*, list all associated permit number(s), attach pages as needed).			☒ YES ☐ NO ☐ To be determined
Associated Permit No (s.): TBD			
1. Identify the requirements of 30 TAC Chapter 122 that will be triggered if this application is approved. FOP Significant Revision ☐ FOP Minor ☐ Application for an FOP Revision ☐ To Be Determined ☐ Operational Flexibility/Off-Permit Notification ☐ Streamlined Revision for GOP ☐ None ☒			

III. Type of Permit Action Requested (continued)	
H. Federal Operating Permit Requirements (30 TAC Chapter 122 Applicability) *(continued)*	
2. Identify the type(s) of FOP(s) issued and/or FOP application(s) submitted/pending for the site. (check all that apply)	
GOP Issued ☐ GOP application/revision application submitted or under APD review ☐	
SOP Issued ☐ SOP application/revision application submitted or under APD review ☐	
IV. Public Notice Applicability	
A. Is this a new permit application or a change of location application?	☒ YES ☐ NO
B. Is this application for a concrete batch plant? If Yes, complete V.C.1 – V.C.2.	☐ YES ☒ NO
C. Is this an application for a major modification of a PSD, nonattainment, FCAA 112(g) permit, or exceedance of a PAL permit?	☐ YES ☒ NO
D. Is this application for a PSD or major modification of a PSD located within 100 kilometers or less of an affected state or Class I Area?	☐ YES ☒ NO
If *Yes*, list the affected state(s) and/or Class I Area(s).	
E. Is this a state permit amendment application? If Yes, complete IV.E.1. – IV.E.3. --- NO	
1. Is there any change in character of emissions in this application?	☐ YES ☐ NO
2. Is there a new air contaminant in this application?	☐ YES ☐ NO
3. Do the facilities handle, load, unload, dry, manufacture, or process grain, seed, legumes, or vegetables fibers (agricultural facilities)?	☐ YES ☐ NO
F. List the total annual emission increases associated with the application (*list* **all** *that apply and attach additional sheets as needed*):	
Volatile Organic Compounds (VOC): 15.41 tpy	
Sulfur Dioxide (SO_2): 28.39 tpy	
Carbon Monoxide (CO): 362.43 tpy	
Nitrogen Oxides (NO_x): 347.3 tpy	
Particulate Matter (PM): 39.96 tpy	
PM_{10} microns or less (PM_{10}): 39.96 tpy	
$PM_{2.5}$ microns or less ($PM_{2.5}$): 39.96 tpy	
Sulfuric Acid Mist (H_2SO_4): 1.25 tpy	
Lead (Pb): 0.042 tpy	
Hazardous Air Pollutants (HAPs): 4.15 tpy	
Other speciated air contaminants **not** listed above: CO_2- 1,150,839 tpy; CO_2e-1,152,224 tpy	

V. Public Notice Information (complete if applicable)		
A. Public Notice Contact Name: Ms. Christie Couvillion		
Title: Sr. Environmental Specialist		
Mailing Address: 1044 N. 115th Street, Suite 400		
City: Omaha	State: NE	ZIP Code: 68154-4446
Telephone No.: 402-691-9500		
B. Name of the Public Place: Navasota Public Library		
Physical Address (No P.O. Boxes): 1411 E. Washington Ave.		
City: Navasota	County: Grimes	ZIP Code: 77868
The public place has granted authorization to place the application for public viewing and copying.		☒ YES ☐ NO
The public place has internet access available for the public.		☒ YES ☐ NO
C. Concrete Batch Plants, PSD, and Nonattainment Permits		
1. County Judge Information (For Concrete Batch Plants and PSD and/or Nonattainment Permits) for this facility site.		
The Honorable: Betty Shiflett		
Mailing Address: P.O. Box 160		
City: Anderson	State: Texas	ZIP Code: 77830
2. Is the facility located in a municipality or an extraterritorial jurisdiction of a municipality? *(For Concrete Batch Plants)*		☐ YES ☐ NO
Presiding Officers Name(s): N/A		
Title:		
Mailing Address:		
City:	State:	ZIP Code:
3. Provide the name, mailing address of the chief executive of the city for the location where the facility is or will be located.		
Chief Executive: Mayor Gail Sowell		
Mailing Address: P.O. Box 592		
City: Anderson	State: Texas	ZIP Code: 77830

V. Public Notice Information (complete if applicable) (continued)		
3. Provide the name, mailing address of the Indian Governing Body for the location where the facility is or will be located. *(continued)*		
Name of the Indian Governing Body: N/A		
Title:		
Mailing Address:		
City:	State:	ZIP Code:
D. Bilingual Notice		
Is a bilingual program **required** by the Texas Education Code in the School District?		☒ YES ☐ NO
Are the children who attend either the elementary school or the middle school closest to your facility eligible to be enrolled in a bilingual program provided by the district?		☒ YES ☐ NO
If *Yes*, list which languages are required by the bilingual program? Spanish		
VI. Small Business Classification (Required)		
A. Does this company (including parent companies and subsidiary companies) have fewer than 100 employees or less than $6 million in annual gross receipts?		☐ YES ☒ NO
B. Is the site a major stationary source for federal air quality permitting?		☒ YES ☐ NO
C. Are the site emissions of any regulated air pollutant greater than or equal to 50 tpy?		☒ YES ☐ NO
D. Are the site emissions of all regulated air pollutants combined less than 75 tpy?		☐ YES ☒ NO
VII. Technical Information		
A. The following information must be submitted with your Form PI-1 (this is just a checklist to make sure you have included everything)		
1. Current Area Map ☒		
2. Plot Plan ☒		
3. Existing Authorizations ☒		
4. Process Flow Diagram ☒		
5. Process Description ☒		
6. Maximum Emissions Data and Calculations ☒		
7. Air Permit Application Tables ☒		
a. Table 1(a) (Form 10153) entitled, Emission Point Summary ☒		
b. Table 2 (Form 10155) entitled, Material Balance ☒		
c. Other equipment, process or control device tables ☒		

VII. Technical Information				
B. Are any schools located within 3,000 feet of this facility?				☐ YES ☒ NO
C. Maximum Operating Schedule:				
Hours: 24	Day(s): 365	Week(s): 52	Year(s): 2,920 hrs/yr	
Seasonal Operation? If Yes, please describe in the space provide below.				☐ YES ☒ NO
D. Have the planned MSS emissions been previously submitted as part of an emissions inventory?				☐ YES ☒ NO
Provide a list of each planned MSS facility or related activity and indicate which years the MSS activities have been included in the emissions inventories. Attach pages as needed.				
E. Does this application involve any air contaminants for which a *disaster review* is required?				☐ YES ☒ NO
F. Does this application include a pollutant of concern on the *Air Pollutant Watch List (APWL)*?				☐ YES ☒ NO
VIII. State Regulatory Requirements **Applicants must demonstrate compliance with all applicable state regulations to obtain a permit or amendment**. *The application must contain detailed attachments addressing applicability or non applicability; identify state regulations; show how requirements are met; and include compliance demonstrations.*				
A. Will the emissions from the proposed facility protect public health and welfare, and comply with all rules and regulations of the TCEQ?				☒ YES ☐ NO
B. Will emissions of significant air contaminants from the facility be measured?				☒ YES ☐ NO
C. Is the Best Available Control Technology (BACT) demonstration attached?				☒ YES ☐ NO
D. Will the proposed facilities achieve the performance represented in the permit application as demonstrated through recordkeeping, monitoring, stack testing, or other applicable methods?				☒ YES ☐ NO
IX. Federal Regulatory Requirements **Applicants must demonstrate compliance with all applicable federal regulations to obtain a permit or amendment** *The application must contain detailed attachments addressing applicability or non applicability; identify federal regulation subparts; show how requirements are met; and include compliance demonstrations.*				
A. Does Title 40 Code of Federal Regulations Part 60, (40 CFR Part 60) New Source Performance Standard (NSPS) apply to a facility in this application?				☒ YES ☐ NO
B. Does 40 CFR Part 61, National Emissions Standard for Hazardous Air Pollutants (NESHAP) apply to a facility in this application?				☐ YES ☒ NO
C. Does 40 CFR Part 63, Maximum Achievable Control Technology (MACT) standard apply to a facility in this application?				☒ YES ☐ NO

IX.	**Federal Regulatory Requirements** **Applicants must demonstrate compliance with all applicable federal regulations to obtain a permit or amendment** ***The application must contain detailed attachments addressing applicability or non applicability; identify federal regulation subparts; show how requirements are met; and include compliance demonstrations.***	
D.	Do nonattainment permitting requirements apply to this application?	☐ YES ☒ NO
E.	Do prevention of significant deterioration permitting requirements apply to this application?	☒ YES ☐ NO
F.	Do Hazardous Air Pollutant Major Source [FCAA 112(g)] requirements apply to this application?	☐ YES ☒ NO
G.	Is a Plant-wide Applicability Limit permit being requested?	☐ YES ☒ NO
X.	**Professional Engineer (P.E.) Seal**	
Is the estimated capital cost of the project greater than $2 million dollars?		☒ YES ☐ NO
If *Yes*, submit the application under the seal of a Texas licensed P.E.		
XI.	**Permit Fee Information**	
Check, Money Order, Transaction Number ,ePay Voucher Number: N/A		Fee Amount: N/A
Company name on check:		Paid online?: ☐ YES ☐ NO
Is a copy of the check or money order attached to the original submittal of this application?		☐ YES ☐ NO ☒ N/A
Is a Table 30 (Form 10196) entitled, Estimated Capital Cost and Fee Verification, attached?		☒ YES ☐ NO ☐ N/A

Texas Commission on Environmental Quality
Form PI-1 General Application for
Air Preconstruction Permit and Amendment

XII. Delinquent Fees and Penalties
This form **will not be processed** until all delinquent fees and/or penalties owed to the TCEQ or the Office of the Attorney General on behalf of the TCEQ is paid in accordance with the Delinquent Fee and Penalty Protocol. For more information regarding Delinquent Fees and Penalties, go to the TCEQ Web site at: www.tceq.texas.gov/agency/delin/index.html.
XIII. Signature
The signature below confirms that I have knowledge of the facts included in this application and that these facts are true and correct to the best of my knowledge and belief. I further state that to the best of my knowledge and belief, the project for which application is made will not in any way violate any provision of the Texas Water Code (TWC), Chapter 7, Texas Clean Air Act (TCAA), as amended, or any of the air quality rules and regulations of the Texas Commission on Environmental Quality or any local governmental ordinance or resolution enacted pursuant to the TCAA I further state that I understand my signature indicates that this application meets all applicable nonattainment, prevention of significant deterioration, or major source of hazardous air pollutant permitting requirements. The signature further signifies awareness that intentionally or knowingly making or causing to be made false material statements or representations in the application is a criminal offense subject to criminal penalties.
Name: Nicholas Borman, Sr Vice President, Engineering and Construction
Signature: NBorman *Original Signature Required*
Date: July 19, 2013

TABLE 31
COMBUSTION TURBINES

TURBINE DATA

Emission Point Number From Table 1(a) : 1, 2, 3__

APPLICATION	CYCLE
____X_____ Electric Generation ___ Base Load _X_ Peaking _____ Gas Compression _____ Other (Specify)_____	__X__ Simple Cycle _____ Regenerative Cycles _____ Cogeneration _____ Combined Cycle
Manufacturer __Siemens____ Model No. ___SGT6-5000F(5)ee_____ Serial No. ___TBD_____	Model represented is based on: __X__ Preliminary Design _____ Contract Award _____ Other (specify) _____
Manufacturer's Rated Output at Baseload, ISO __231.2 MW __ (MW)(hp)	
Proposed Site Operating Range __93.0-231.2 MW __ (MW)(hp)	
Manufacturer's Rated Heat Rate at Baseload, ISO ___9,778_____(Btu (HHV)/k W-hr)	

FUEL DATA

Primary Fuels:

_X__ Natural Gas _____ Process Offgas _____ Landfill/Digester Gas
_____ Fuel Oil _____ Refinery Gas _____ Other

Backup Fuels

__X___ Not Provided _____ Process Offgas _____ Ethane
_____ Fuel Oil _____ Refinery Gas _____ Other (specify) _____

Attach fuel analyses, including maximum sulfur content, heating value (specify LHV or HHV) and mole percent of gaseous constituents.

EMISSIONS DATA

Attach manufacturer's information showing emissions of NO_x, CO, VOC and PM for each proposed fuel at turbine loads and site ambient temperatures representative of the range of proposed operation. The information must be sufficient to determine maximum hourly and annual emission rates. Annual emissions may be based on a conservatively low approximation of site annual average temperature. Provide emissions in pounds per hour and except for PM, parts per million by volume at actual conditions and corrected to dry, 15% oxygen conditions.

Method of Emission Control:

__ X_ Lean Premix Combustors ____ Oxidation Catalyst _____ Water Injection ___ Other(specify)
_____ Other Low-NO_x Combustion ____ SCR Catalyst _____ Steam Injection

See report text for details on emissions data.

ADDITIONAL INFORMATION

On separate sheets attach the following:

A. Details regarding principle of operation of emission controls. If add-on equipment is used, provide make and model and manufacturer's information. Example details include: controller input variables and operational algorithms for water or ammonia injection systems, combustion mode versus turbine load for variable mode combustors, etc.
B. Exhaust parameter information on Table 1(a).
C. If fired duct burners are used, information required on Table 6.

TABLE 31
COMBUSTION TURBINES

TURBINE DATA

Emission Point Numbers From Table 1(a) : 1, 2, 3__

APPLICATION	CYCLE
____X_____ Electric Generation ___ Base Load _X_ Peaking _____ Gas Compression _____ Other (Specify)_____	__X__ Simple Cycle _____ Regenerative Cycles _____ Cogeneration _____ Combined Cycle
Manufacturer __GE_____ Model No. ___7FA-.05_____ Serial No. ___TBD_____	Model represented is based on: __X__ Preliminary Design _____ Contract Award _____ Other (specify) _____

Manufacturer's Rated Output at Baseload, ISO __227.6 MW __ (MW)(hp)

Proposed Site Operating Range __91.5-227.6 MW __ (MW)(hp)

Manufacturer's Rated Heat Rate at Baseload, ISO ___9,672_____(Btu (HHV)/k W-hr)

FUEL DATA

Primary Fuels:

_X__ Natural Gas _____ Process Offgas _____ Landfill/Digester Gas
_____ Fuel Oil _____ Refinery Gas _____ Other

Backup Fuels

__X___ Not Provided _____ Process Offgas _____ Ethane
_____ Fuel Oil _____ Refinery Gas _____ Other (specify) _____

Attach fuel analyses, including maximum sulfur content, heating value (specify LHV or HHV) and mole percent of gaseous constituents.

EMISSIONS DATA

Attach manufacturer's information showing emissions of NO_x, CO, VOC and PM for each proposed fuel at turbine loads and site ambient temperatures representative of the range of proposed operation. The information must be sufficient to determine maximum hourly and annual emission rates. Annual emissions may be based on a conservatively low approximation of site annual average temperature. Provide emissions in pounds per hour and except for PM, parts per million by volume at actual conditions and corrected to dry, 15% oxygen conditions.

Method of Emission Control:

__ X_ Lean Premix Combustors __ __ Oxidation Catalyst _____ Water Injection ___ Other(specify)
_____ Other Low-NO_x Combustion __ __ SCR Catalyst _____ Steam Injection

See report text for details on emissions data.

ADDITIONAL INFORMATION

On separate sheets attach the following:

A. Details regarding principle of operation of emission controls. If add-on equipment is used, provide make and model and manufacturer's information. Example details include: controller input variables and operational algorithms for water or ammonia injection systems, combustion mode versus turbine load for variable mode combustors, etc.
B. Exhaust parameter information on Table 1(a).
C. If fired duct burners are used, information required on Table 6.

TABLE 31
COMBUSTION TURBINES

TURBINE DATA

Emission Point Numbers From Table 1(a) : 1, 2, 3__

APPLICATION	CYCLE
____X_____ Electric Generation ___ Base Load _X_ Peaking _____ Gas Compression _____ Other (Specify)_____	__X__ Simple Cycle _____ Regenerative Cycles _____ Cogeneration _____ Combined Cycle
Manufacturer __GE_____ Model No. ___7FA-.04_____ Serial No. ___TBD_____	Model represented is based on: __X__ Preliminary Design _____ Contract Award _____ Other (specify) _____

Manufacturer's Rated Output at Baseload, ISO __207 MW__ (MW)(hp)

Proposed Site Operating Range __93.2-207 MW __ (MW)(hp)

Manufacturer's Rated Heat Rate at Baseload, ISO ___9,833_____(Btu (HHV)/k W-hr)

FUEL DATA

Primary Fuels:

_X__ Natural Gas _____ Process Offgas _____ Landfill/Digester Gas
_____ Fuel Oil _____ Refinery Gas _____ Other

Backup Fuels

__X___ Not Provided _____ Process Offgas _____ Ethane
_____ Fuel Oil _____ Refinery Gas _____ Other (specify) _____

Attach fuel analyses, including maximum sulfur content, heating value (specify LHV or HHV) and mole percent of gaseous constituents.

EMISSIONS DATA

Attach manufacturer's information showing emissions of NO_x, CO, VOC and PM for each proposed fuel at turbine loads and site ambient temperatures representative of the range of proposed operation. The information must be sufficient to determine maximum hourly and annual emission rates. Annual emissions may be based on a conservatively low approximation of site annual average temperature. Provide emissions in pounds per hour and except for PM, parts per million by volume at actual conditions and corrected to dry, 15% oxygen conditions.

Method of Emission Control:

__ X_ Lean Premix Combustors __ __ Oxidation Catalyst _____ Water Injection ___ _ Other(specify)
_____ Other Low-NO_x Combustion ____ SCR Catalyst _____ Steam Injection

See report text for details on emissions data.

ADDITIONAL INFORMATION

On separate sheets attach the following:

A. Details regarding principle of operation of emission controls. If add-on equipment is used, provide make and model and manufacturer's information. Example details include: controller input variables and operational algorithms for water or ammonia injection systems, combustion mode versus turbine load for variable mode combustors, etc.
B. Exhaust parameter information on Table 1(a).
C. If fired duct burners are used, information required on Table 6.

TABLE 2

MATERIAL BALANCE

This material balance table is used to quantify possible emissions of air contaminants and special emphasis should be placed on potential air contaminants, for example: If feed contains sulfur, show distribution to all products. Please relate each material (or group of materials) listed to its respective location in the process flow diagram by assigning point numbers (taken from the flow diagram) to each materials.

LIST EVERY MATERIAL INVOLVED IN EACH OF THE FOLLOWING GROUPS	Point No. from Flow Diagram	Process Rate (lbs/hr or SCFM) standard conditions: 70°F 14.7 PSIA. Check appropriate column at right for each process.	Measurement	Estimation	Calculation
1. Raw Materials - Input N/A					
2. Fuels – Input Turbines – Natural Gas Emergency Engine, Fire Pump – Ultra low-sulfur diesel		Turbines = 2,441 MMBtu/hr per turbine Emergency Engine: 19.17 MMBtu/hr Fire Pump: 4.02 MMBtu/hr		X	
3. Products & By-Products - Output Electricity		Electricity = 231.2 MW per turbine			
4. Solid Wastes - Output N/A					
5. Liquid Wastes - Output N/A					
6. Airborne Waste (Solid) – Output Three new turbines, one new emergency generator, one new fire pump: PM PM_{10} $PM_{2.5}$	1, 2, 3, EMGEN, FWPUMP	See Table 1(a).			X
7. Airborne Wastes (Gaseous) - Output Three new turbines, one new emergency generator, one new fire pump: NO_x CO VOC SO_2 H_2SO_4 CO_2 CO_2e	1, 2, 3, EMGEN, FWPUMP	See Table 1(a).			X

TABLE 2

MATERIAL BALANCE

This material balance table is used to quantify possible emissions of air contaminants and special emphasis should be placed on potential air contaminants, for example: If feed contains sulfur, show distribution to all products. Please relate each material (or group of materials) listed to its respective location in the process flow diagram by assigning point numbers (taken from the flow diagram) to each materials.

LIST EVERY MATERIAL INVOLVED IN EACH OF THE FOLLOWING GROUPS	Point No. from Flow Diagram	Process Rate (lbs/hr or SCFM) standard conditions: 70°F 14.7 PSIA. Check appropriate column at right for each process.	Measurement	Estimation	Calculation
1. Raw Materials - Input N/A					
2. Fuels – Input Turbines – Natural Gas Emergency Engine, Fire Pump – Ultra low-sulfur diesel		Turbines = 2,378 MMBtu/hr per turbine Emergency Engine: 19.17 MMBtu/hr Fire Pump: 4.02 MMBtu/hr		X	
3. Products & By-Products - Output Electricity		Electricity = 227.6 MW per turbine			
4. Solid Wastes - Output N/A					
5. Liquid Wastes - Output N/A					
6. Airborne Waste (Solid) – Output Three new turbines, one new emergency generator, one new fire pump: PM PM_{10} $PM_{2.5}$	1, 2, 3, EMGEN, FWPUMP	See Table 1(a).			X
7. Airborne Wastes (Gaseous) - Output Three new turbines, one new emergency generator, one new fire pump: NO_x CO VOC SO_2 H_2SO_4 CO_2 CO_2e	1, 2, 3, EMGEN, FWPUMP	See Table 1(a).			X

TABLE 2

MATERIAL BALANCE

This material balance table is used to quantify possible emissions of air contaminants and special emphasis should be placed on potential air contaminants, for example: If feed contains sulfur, show distribution to all products. Please relate each material (or group of materials) listed to its respective location in the process flow diagram by assigning point numbers (taken from the flow diagram) to each materials.

LIST EVERY MATERIAL INVOLVED IN EACH OF THE FOLLOWING GROUPS	Point No. from Flow Diagram	Process Rate (lbs/hr or SCFM) standard conditions: 70°F 14.7 PSIA. Check appropriate column at right for each process.	Measurement	Estimation	Calculation
1. Raw Materials - Input N/A					
2. Fuels – Input Turbines – Natural Gas Emergency Engine, Fire Pump – Ultra low-sulfur diesel		Turbines = 2,198 MMBtu/hr per turbine Emergency Engine: 19.17 MMBtu/hr Fire Pump: 4.02 MMBtu/hr		X	
3. Products & By-Products - Output Electricity		Electricity = 207 MW per turbine			
4. Solid Wastes - Output N/A					
5. Liquid Wastes - Output N/A					
6. Airborne Waste (Solid) – Output Three new turbines, one new emergency generator, one new fire pump: PM PM_{10} $PM_{2.5}$	1, 2, 3, EMGEN, FWPUMP	See Table 1(a).			X
7. Airborne Wastes (Gaseous) - Output Three new turbines, one new emergency generator, one new fire pump: NO_x CO VOC SO_2 H_2SO_4 CO_2 CO_2e	1, 2, 3, EMGEN, FWPUMP	See Table 1(a).			X

Texas Commission on Environmental Quality
Table 29 Reciprocating Engines

I. Engine Data			
Manufacturer: Cummins or Other	Model No. CFP Engine Model or Similar	Serial No. TBD	Manufacture Date: New (post 2013)
Rebuilds Date: N/A	No. of Cylinders: 6	Compression Ratio: TBD	EPN: FWPUMP

Application: ☐ Gas Compression ☐ Electric Generation ☐ Refrigeration ☒ Emergency/Stand by

☒ 4 Stroke Cycle ☐ 2 Stroke Cycle ☐ Carbureted ☐ Spark Ignited ☐ Dual Fuel ☐ Fuel Injected

☒ Diesel ☐ Naturally Aspirated ☐ Blower /Pump Scavenged ☐ Turbo Charged and I.C. ☒ Turbo Charged

☒ Intercooled ☐ I.C. Water Temperature ☐ Lean Burn ☐ Rich Burn

Ignition/Injection Timing: Fixed: TBD Variable: TBD

Manufacture Horsepower Rating**:** 575 hp Proposed Horsepower Rating: 575 hp

Discharge Parameters

Stack Height (Feet)	Stack Diameter (Feet)	Stack Temperature (^oF)	Exit Velocity (FPS)
14.0	1.0	884	75.9

II. Fuel Data

Type of Fuel: ☐ Field Gas ☐ Landfill Gas ☐ LP Gas ☐ Natural Gas ☐ Digester Gas ☒ Diesel

Fuel Consumption (BTU/bhp-hr): 4.02 MMBTU/hr	Heat Value: 138,000 BTU/gal (HHV)	124,000 BTU/gal (LHV)

Sulfur Content (grains/100 scf - weight %): 1.35 gr/100 dscf

III. Emission Factors (Before Control)

NO_X		CO		SO_2		VOC		Formaldehyde		PM10	
g/hp-hr	ppmv	g/hp-hr	ppmv	g/hp-hr	ppmv	g/hp-hr	ppmv	g/hp-hr	ppmv	g/hp-hr	ppmv
3.0		3.0		0.005		1.14		3.74E-03		0.15	

Source of Emission Factors: ☐ Manufacturer Data ☒ AP-42 ☒ Other (specify): Table 4 to CI ICE NSPS, Mass Balance

IV. Emission Factors (Post Control)

NO_X		CO		SO2		VOC		Formaldehyde		PM10	
g/hp-hr	ppmv	g/hp-hr	ppmv	g/hp-hr	ppmv	g/hp-hr	ppmv	g/hp-hr	ppmv	g/hp-hr	ppmv

Method of Emission Control: ☐ NSCR Catalyst ☐ Lean Operation ☐ Parameter Adjustment

☐ Stratified Charge ☐ JLCC Catalyst ☐ Other (Specify): N/A

Note: *Must submit a copy of any manufacturer control information that demonstrates control efficiency.*

Is Formaldehyde included in the VOCs? **N/A** ☐ Yes ☐ No

V. Federal and State Standards (Check all that apply)

☐ NSPS JJJJ ☒ MACT ZZZZ ☒ NSPS IIII ☐ Title 30 Chapter 117 - List County: _____

VI. Additional Information

1. Submit a copy of the engine manufacturer's site rating or general rating specification data.
2. Submit a typical fuel gas analysis, including sulfur content and heating value. For gaseous fuels, provide mole percent of constituents.
3. Submit description of air/fuel ratio control system (manufacturer information is acceptable).

Texas Commission on Environmental Quality
Table 29 Reciprocating Engines

I. Engine Data			
Manufacturer: Caterpillar or Other	Model No. 3516C ATAAC or Similar	Serial No. TBD	Manufacture Date: New (post 2013)
Rebuilds Date: N/A	No. of Cylinders: 16	Compression Ratio: 14.7:1	EPN: EMGEN

Application: ☐ Gas Compression ☐ Electric Generation ☐ Refrigeration ☒ Emergency/Stand by

☒ 4 Stroke Cycle ☐ 2 Stroke Cycle ☐ Carbureted ☐ Spark Ignited ☐ Dual Fuel ☐ Fuel Injected

☒ Diesel ☐ Naturally Aspirated ☐ Blower /Pump Scavenged ☐ Turbo Charged and I.C. ☒ Turbo Charged

☒ Intercooled ☐ I.C. Water Temperature ☐ Lean Burn ☐ Rich Burn

Ignition/Injection Timing: Fixed: TBD | Variable: TBD

Manufacture Horsepower Rating**:** 2,937 hp | Proposed Horsepower Rating: 2,937 hp

Discharge Parameters

Stack Height (Feet)	Stack Diameter (Feet)	Stack Temperature (^oF)	Exit Velocity (FPS)
14.0	1.0	768	323.4

II. Fuel Data

Type of Fuel: ☐ Field Gas ☐ Landfill Gas ☐ LP Gas ☐ Natural Gas ☐ Digester Gas ☒ Diesel

Fuel Consumption (BTU/bhp-hr): 19.17 MMBTU/hr | Heat Value: 138,000 BTU/gal (HHV) | 124,000 BTU/gal (LHV)

Sulfur Content (grains/100 scf - weight %): 1.35 gr/100 dscf

III. Emission Factors (Before Control)

NO_X		CO		SO_2		VOC		Formaldehyde		PM10	
g/hp-hr	ppmv	g/hp-hr	ppmv	g/hp-hr	ppmv	g/hp-hr	ppmv	g/hp-hr	ppmv	g/hp-hr	ppmv
4.8		2.6		0.005		0.32		2.34E-04		0.15	

Source of Emission Factors: ☐ Manufacturer Data ☒ AP-42 ☒ Other (specify): EPA Tier 2 Emission Limits, Mass Balance

IV. Emission Factors (Post Control)

NO_X		CO		SO2		VOC		Formaldehyde		PM10	
g/hp-hr	ppmv	g/hp-hr	ppmv	g/hp-hr	ppmv	g/hp-hr	ppmv	g/hp-hr	ppmv	g/hp-hr	ppmv

Method of Emission Control: ☐ NSCR Catalyst ☐ Lean Operation ☐ Parameter Adjustment

☐ Stratified Charge ☐ JLCC Catalyst ☐ Other (Specify): N/A

Note: *Must submit a copy of any manufacturer control information that demonstrates control efficiency.*

Is Formaldehyde included in the VOCs? **N/A** ☐ Yes ☐ No

V. Federal and State Standards (Check all that apply)

☐ NSPS JJJJ ☒ MACT ZZZZ ☒ NSPS IIII ☐ Title 30 Chapter 117 - List County: _____

VI. Additional Information

1. Submit a copy of the engine manufacturer's site rating or general rating specification data.
2. Submit a typical fuel gas analysis, including sulfur content and heating value. For gaseous fuels, provide mole percent of constituents.
3. Submit description of air/fuel ratio control system (manufacturer information is acceptable).

Emission Rate Calculations

Appendix B

July 2013
Project No. 0189555

Environmental Resources Management
15810 Park Ten Place, Suite 300
Houston, Texas 77084
(281) 600-1000

TEXAS COMMISSION ON ENVIRONMENTAL QUALITY

Table 1(a) Emission Point Summary

Date:	7/22/2013	**Permit No.:**	TBD	**Regulated Entity No.:**	TBD
Area Name:	Tenaska Roans Prairie Generating Station			**Customer Reference No.:**	CN600698948

Review of applications and issuance of permits will be expedited by supplying all necessary information requested on this Table.

AIR CONTAMINANT DATA					
1. Emission Point			**2. Component or Air Contaminant Name**	**3. Air Contaminant Emission Rate**	
(A) EPN	**(B) FIN**	**(C) NAME**		**(A) POUND**	**(B) TPY**
1	1	Unit 1 (Siemens SGT6-5000F(5ee) Turbine)	NO_X	80.96	118.20
			NO_X (MSS)	97.45	6.33
			CO	25.23	36.84
			CO (MSS)	643.89	80.85
			VOC	3.14	4.58
			VOC (MSS)	71.94	9.00
			SO_2	4.25	4.54
			PM	13.73	14.77
			PM_{10}	13.73	14.77
			$PM_{2.5}$	13.73	14.77
			H_2SO_4	0.54	0.78
			Pb	0.01	0.02
			HAP (excluding Pb)	1.04	1.51
			Formaldehyde	0.28	0.40
			CO_2	291,749.39	425,954.12
			CH_4	5.38	7.86
			N_2O	0.54	0.79
			CO_2e	292,029.20	426,362.63

TEXAS COMMISSION ON ENVIRONMENTAL QUALITY

Table 1(a) Emission Point Summary

Date:	7/22/2013	**Permit No.:**	TBD	**Regulated Entity No.:**	TBD
Area Name:	Tenaska Roans Prairie Generating Station			**Customer Reference No.:**	CN600698948

Review of applications and issuance of permits will be expedited by supplying all necessary information requested on this Table.

AIR CONTAMINANT DATA					
1. Emission Point			**2. Component or Air Contaminant Name**	**3. Air Contaminant Emission Rate**	
(A) EPN	**(B) FIN**	**(C) NAME**		**(A) POUND**	**(B) TPY**
2	2	Unit 2 (Siemens SGT6-5000F(5ee) Turbine)	NO_X	80.96	118.20
			NO_X (MSS)	97.45	6.33
			CO	25.23	36.84
			CO (MSS)	643.89	80.85
			VOC	3.14	4.58
			VOC (MSS)	71.94	9.00
			SO_2	4.25	4.54
			PM	13.73	14.77
			PM_{10}	13.73	14.77
			$PM_{2.5}$	13.73	14.77
			H_2SO_4	0.54	0.78
			Pb	0.01	0.02
			HAP (excluding Pb)	1.04	1.51
			Formaldehyde	0.28	0.40
			CO_2	291,749.39	425,954.12
			CH_4	5.38	7.86
			N_2O	0.54	0.79
			CO_2e	292,029.20	426,362.63

TEXAS COMMISSION ON ENVIRONMENTAL QUALITY

Table 1(a) Emission Point Summary

Date:	7/22/2013	**Permit No.:**	TBD	**Regulated Entity No.:**	TBD
Area Name:	Tenaska Roans Prairie Generating Station			**Customer Reference No.:**	CN600698948

Review of applications and issuance of permits will be expedited by supplying all necessary information requested on this Table.

AIR CONTAMINANT DATA					
1. Emission Point			**2. Component or Air Contaminant Name**	**3. Air Contaminant Emission Rate**	
(A) EPN	**(B) FIN**	**(C) NAME**		**(A) POUND**	**(B) TPY**
3	3	Unit 3 (Siemens SGT6-5000F(5ee) Turbine)	NO_X	80.96	118.20
			NO_X (MSS)	97.45	6.33
			CO	25.23	36.84
			CO (MSS)	643.89	80.85
			VOC	3.14	4.58
			VOC (MSS)	71.94	9.00
			SO_2	4.25	4.54
			PM	13.73	14.77
			PM_{10}	13.73	14.77
			$PM_{2.5}$	13.73	14.77
			H_2SO_4	0.54	0.78
			Pb	0.01	0.02
			HAP (excluding Pb)	1.04	1.51
			Formaldehyde	0.28	0.40
			CO_2	291,749.39	425,954.12
			CH_4	5.38	7.86
			N_2O	0.54	0.79
			CO_2e	292,029.20	426,362.63
EMGEN	EMGEN	Emergency Generator Engine	NO_X	30.91	1.55
			CO	16.91	0.85
			VOC	2.07	0.10
			SO_2	0.03	<0.01
			PM	0.97	0.05
			PM_{10}	0.97	0.05
			$PM_{2.5}$	0.97	0.05
			H_2SO_4	<0.01	<0.01
			HAP (excluding Pb)	0.03	<0.01
			Formaldehyde	<0.01	<0.01
			CO_2	3,125.45	156.27
			CH_4	0.13	0.01
			N_2O	0.03	<0.01
			CO_2e	3,135.97	156.80

TEXAS COMMISSION ON ENVIRONMENTAL QUALITY

Table 1(a) Emission Point Summary

Date:	7/22/2013	**Permit No.:**	TBD	**Regulated Entity No.:**	TBD
Area Name:	Tenaska Roans Prairie Generating Station			**Customer Reference No.:**	CN600698948

Review of applications and issuance of permits will be expedited by supplying all necessary information requested on this Table.

AIR CONTAMINANT DATA					
1. Emission Point			**2. Component or Air Contaminant Name**	**3. Air Contaminant Emission Rate**	
(A) EPN	**(B) FIN**	**(C) NAME**		**(A) POUND**	**(B) TPY**
FWPUMP	FWPUMP	Fire Water Pump	NO_X	3.78	0.19
			CO	3.84	0.19
			VOC	1.45	0.07
			SO_2	0.01	<0.01
			PM	0.19	0.01
			PM_{10}	0.19	0.01
			$PM_{2.5}$	0.19	0.01
			H_2SO_4	<0.01	<0.01
			HAP (excluding Pb)	0.02	<0.01
			Formaldehyde	<0.01	<0.01
			CO_2	654.79	32.74
			CH_4	0.03	<0.01
			N_2O	0.01	<0.01
			CO_2e	657.00	32.85
CBFUG	CBFUG	Circuit Breaker Fugitives	SF_6	<0.01	0.01
			CO_2e	47.75	209.13
MSSFUG	MSSFUG	Maintenance Activites	NO_X	<0.01	<0.01
			CO	<0.01	<0.01
			VOC	0.30	<0.01
			PM	0.20	0.04
			PM_{10}	0.20	0.04
			$PM_{2.5}$	0.20	0.04
			HAP (excluding Pb)	0.30	<0.01
			CO_2	0.92	0.01
			CH_4	16.70	0.11
			CO_2e	351.62	2.42
FUG	FUG	Fugitives	VOC	0.01	0.06
			HAP (excluding Pb)	0.01	0.06
			CO_2	0.04	0.18
			CH_4	0.75	3.30
			CO_2e	15.86	69.46

EPN = Emission Point Number
FIN = Facility Identification Number

TEXAS COMMISSION ON ENVIRONMENTAL QUALITY

Table 1(a) Emission Point Summary

Date:	7/22/2013	**Permit No.:**	TBD	**Regulated Entity No.:**	TBD
Area Name:	Tenaska Roans Prairie Generating Station			**Customer Reference No.:**	CN600698948

Review of applications and issuance of permits will be expedited by supplying all necessary information requested on this Table.

AIR CONTAMINANT DATA			**EMISSION POINT DISCHARGE PARAMETERS**											
1. Emission Point			**4. UTM Coordinates of Emission Point**			**Source**								
						5. Building	**6. Height Above**	**7. Stack Exit Data**			**8. Fugitives**			
EPN (A)	**FIN (B)**	**Name (C)**	**Zone**	**East (Meters)**	**North (Meters)**	**Height (Ft.)**	**Ground (Ft.)**	**Diameter (Ft.) (A)**	**Velocity (FPS) (B)**	**Temperature (°F) (C)**	**Length (Ft.) (A)**	**Width (Ft.) (B)**	**Axis Degrees (C)**
1	1	Unit 1 (Siemens SGT6-5000F(5ee) Turbine)	15	219,403	3,387,566	21.0	60.0	20.0	225.2	1,099	--	--	--
2	2	Unit 2 (Siemens SGT6-5000F(5ee) Turbine)	15	219,420	3,387,523	21.0	60.0	20.0	225.2	1,099	--	--	--
3	3	Unit 3 (Siemens SGT6-5000F(5ee) Turbine)	15	219,438	3,387,480	21.0	60.0	20.0	225.2	1,099	--	--	--
EMGEN	EMGEN	Emergency Generator Engine	15	219,528	3,387,595	21.0	14.0	1.0	323.4	768	--	--	--
FWPUMP	FWPUMP	Fire Water Pump	15	219,380	3,387,593	10.5	14.0	1.0	75.9	884	--	--	--
CBFUG	CBFUG	Circuit Breaker Fugitives	15	219,509	3,387,556	--	3.0	--	--	--	850	660	77 W
MSSFUG	MSSFUG	Maintenance Activites	15	219,509	3,387,556	--	3.0	--	--	--	850	660	77 W
FUG	FUG	Fugitives	15	219,509	3,387,556	--	3.0	--	--	--	850	660	77 W

EPN = Emission Point Number

TEXAS COMMISSION ON ENVIRONMENTAL QUALITY

Table 1(a) Emission Point Summary

Date:	7/22/2013	**Permit No.:**	TBD	**Regulated Entity No.:**	TBD
Area Name:	Tenaska Roans Prairie Generating Station			**Customer Reference No.:**	CN600698948

Review of applications and issuance of permits will be expedited by supplying all necessary information requested on this Table.

AIR CONTAMINANT DATA					
1. Emission Point			**2. Component or Air Contaminant Name**	**3. Air Contaminant Emission Rate**	
(A) EPN	**(B) FIN**	**(C) NAME**		**(A) POUND**	**(B) TPY**
1	1	Unit 1 (GE 7FA.05 Turbine)	NO_X	78.84	115.10
			NO_X (MSS)	81.07	7.67
			CO	38.93	56.84
			CO (MSS)	228.14	69.90
			VOC	3.66	5.35
			VOC (MSS)	23.93	6.57
			SO_2	2.95	4.43
			PM	10.05	15.07
			PM_{10}	10.05	15.07
			$PM_{2.5}$	10.05	15.07
			H_2SO_4	0.30	0.45
			Pb	0.01	0.02
			HAP (excluding Pb)	1.01	1.47
			Formaldehyde	0.27	0.39
			CO_2	284,119.31	414,814.19
			CH_4	5.24	7.65
			N_2O	0.52	0.77
			CO_2e	284,391.79	415,212.02

TEXAS COMMISSION ON ENVIRONMENTAL QUALITY

Table 1(a) Emission Point Summary

Date:	7/22/2013	**Permit No.:**	TBD	**Regulated Entity No.:**	TBD
Area Name:	Tenaska Roans Prairie Generating Station			**Customer Reference No.:**	CN600698948

Review of applications and issuance of permits will be expedited by supplying all necessary information requested on this Table.

AIR CONTAMINANT DATA					
1. Emission Point			**2. Component or Air Contaminant Name**	**3. Air Contaminant Emission Rate**	
(A) EPN	**(B) FIN**	**(C) NAME**		**(A) POUND**	**(B) TPY**
2	2	Unit 2 (GE 7FA.05 Turbine)	NO_X	78.84	115.10
			NO_X (MSS)	81.07	7.67
			CO	38.93	56.84
			CO (MSS)	228.14	69.90
			VOC	3.66	5.35
			VOC (MSS)	23.93	6.57
			SO_2	2.95	4.43
			PM	10.05	15.07
			PM_{10}	10.05	15.07
			$PM_{2.5}$	10.05	15.07
			H_2SO_4	0.30	0.45
			Pb	0.01	0.02
			HAP (excluding Pb)	1.01	1.47
			Formaldehyde	0.27	0.39
			CO_2	284,119.31	414,814.19
			CH_4	5.24	7.65
			N_2O	0.52	0.77
			CO_2e	284,391.79	415,212.02

TEXAS COMMISSION ON ENVIRONMENTAL QUALITY

Table 1(a) Emission Point Summary

Date:	7/22/2013	**Permit No.:**	TBD	**Regulated Entity No.:**	TBD
Area Name:	Tenaska Roans Prairie Generating Station			**Customer Reference No.:**	CN600698948

Review of applications and issuance of permits will be expedited by supplying all necessary information requested on this Table.

AIR CONTAMINANT DATA					
1. Emission Point			**2. Component or Air Contaminant Name**	**3. Air Contaminant Emission Rate**	
(A) EPN	**(B) FIN**	**(C) NAME**		**(A) POUND**	**(B) TPY**
3	3	Unit 3 (GE 7FA.05 Turbine)	NO_X	78.84	115.10
			NO_X (MSS)	81.07	7.67
			CO	38.93	56.84
			CO (MSS)	228.14	69.90
			VOC	3.66	5.35
			VOC (MSS)	23.93	6.57
			SO_2	2.95	4.43
			PM	10.05	15.07
			PM_{10}	10.05	15.07
			$PM_{2.5}$	10.05	15.07
			H_2SO_4	0.30	0.45
			Pb	0.01	0.02
			HAP (excluding Pb)	1.01	1.47
			Formaldehyde	0.27	0.39
			CO_2	284,119.31	414,814.19
			CH_4	5.24	7.65
			N_2O	0.52	0.77
			CO_2e	284,391.79	415,212.02
EMGEN	EMGEN	Emergency Generator Engine	NO_X	30.91	1.55
			CO	16.91	0.85
			VOC	2.07	0.10
			SO_2	0.03	<0.01
			PM	0.97	0.05
			PM_{10}	0.97	0.05
			$PM_{2.5}$	0.97	0.05
			H_2SO_4	<0.01	<0.01
			HAP (excluding Pb)	0.03	<0.01
			Formaldehyde	<0.01	<0.01
			CO_2	3,125.45	156.27
			CH_4	0.13	0.01
			N_2O	0.03	<0.01
			CO_2e	3,135.97	156.80

TEXAS COMMISSION ON ENVIRONMENTAL QUALITY

Table 1(a) Emission Point Summary

Date:	7/22/2013	**Permit No.:**	TBD	**Regulated Entity No.:**	TBD
Area Name:	Tenaska Roans Prairie Generating Station			**Customer Reference No.:**	CN600698948

Review of applications and issuance of permits will be expedited by supplying all necessary information requested on this Table.

AIR CONTAMINANT DATA					
1. Emission Point			**2. Component or Air Contaminant Name**	**3. Air Contaminant Emission Rate**	
(A) EPN	**(B) FIN**	**(C) NAME**		**(A) POUND**	**(B) TPY**
FWPUMP	FWPUMP	Fire Water Pump	NO_X	3.78	0.19
			CO	3.84	0.19
			VOC	1.45	0.07
			SO_2	0.01	<0.01
			PM	0.19	0.01
			PM_{10}	0.19	0.01
			$PM_{2.5}$	0.19	0.01
			H_2SO_4	<0.01	<0.01
			HAP (excluding Pb)	0.02	<0.01
			Formaldehyde	<0.01	<0.01
			CO_2	654.79	32.74
			CH_4	0.03	<0.01
			N_2O	0.01	<0.01
			CO_2e	657.00	32.85
CBFUG	CBFUG	Circuit Breaker Fugitives	SF_6	<0.01	0.01
			CO_2e	47.75	209.13
MSSFUG	MSSFUG	Maintenance Activites	NO_X	<0.01	<0.01
			CO	<0.01	<0.01
			VOC	0.30	<0.01
			PM	0.20	0.04
			PM_{10}	0.20	0.04
			$PM_{2.5}$	0.20	0.04
			HAP (excluding Pb)	0.30	<0.01
			CO_2	0.92	0.01
			CH_4	16.70	0.11
			CO_2e	351.62	2.42
FUG	FUG	Fugitives	VOC	0.01	0.06
			HAP (excluding Pb)	0.01	0.06
			CO_2	0.04	0.18
			CH_4	0.75	3.30
			CO_2e	15.86	69.46

EPN = Emission Point Number
FIN = Facility Identification Number

TEXAS COMMISSION ON ENVIRONMENTAL QUALITY

Table 1(a) Emission Point Summary

Date:	7/22/2013	**Permit No.:**	TBD	**Regulated Entity No.:**	TBD
Area Name:	Tenaska Roans Prairie Generating Station			**Customer Reference No.:**	CN600698948

Review of applications and issuance of permits will be expedited by supplying all necessary information requested on this Table.

AIR CONTAMINANT DATA			**EMISSION POINT DISCHARGE PARAMETERS**											
1. Emission Point			**4. UTM Coordinates of Emission Point**			**Source**								
						5. Building	**6. Height Above**	**7. Stack Exit Data**			**8. Fugitives**			
EPN (A)	**FIN (B)**	**Name (C)**	**Zone**	**East (Meters)**	**North (Meters)**	**Height (Ft.)**	**Ground (Ft.)**	**Diameter (Ft.) (A)**	**Velocity (FPS) (B)**	**Temperature (°F) (C)**	**Length (Ft.) (A)**	**Width (Ft.) (B)**	**Axis Degrees (C)**
1	1	Unit 1 (GE 7FA.05 Turbine)	15	219,403	3,387,566	21.0	60.0	20.0	225.2	1,099	--	--	--
2	2	Unit 2 (GE 7FA.05 Turbine)	15	219,420	3,387,523	21.0	60.0	20.0	225.2	1,099	--	--	--
3	3	Unit 3 (GE 7FA.05 Turbine)	15	219,438	3,387,480	21.0	60.0	20.0	225.2	1,099	--	--	--
EMGEN	EMGEN	Emergency Generator Engine	15	219,528	3,387,595	21.0	14.0	1.0	323.4	768	--	--	--
FWPUMP	FWPUMP	Fire Water Pump	15	219,380	3,387,593	10.5	14.0	1.0	75.9	884	--	--	--
CBFUG	CBFUG	Circuit Breaker Fugitives	15	219,509	3,387,556	--	3.0	--	--	--	850	660	77 W
MSSFUG	MSSFUG	Maintenance Activites	15	219,509	3,387,556	--	3.0	--	--	--	850	660	77 W
FUG	FUG	Fugitives	15	219,509	3,387,556	--	3.0	--	--	--	850	660	77 W

EPN = Emission Point Number
FIN = Facility Identification Number

TEXAS COMMISSION ON ENVIRONMENTAL QUALITY

Table 1(a) Emission Point Summary

Date:	7/22/2013	**Permit No.:**	TBD	**Regulated Entity No.:**	TBD
Area Name:	Tenaska Roans Prairie Generating Station			**Customer Reference No.:**	CN600698948

Review of applications and issuance of permits will be expedited by supplying all necessary information requested on this Table.

AIR CONTAMINANT DATA					
1. Emission Point			**2. Component or Air Contaminant Name**	**3. Air Contaminant Emission Rate**	
(A) EPN	**(B) FIN**	**(C) NAME**		**(A) POUND**	**(B) TPY**
1	1	Unit 1 (GE 7FA.04 Turbine)	NO_X	72.90	106.43
			NO_X (MSS)	82.32	8.76
			CO	35.01	51.11
			CO (MSS)	225.01	69.35
			VOC	3.39	4.95
			VOC (MSS)	19.71	5.48
			SO_2	2.73	4.10
			PM	8.86	13.29
			PM_{10}	8.86	13.29
			$PM_{2.5}$	8.86	13.29
			H_2SO_4	0.28	0.42
			Pb	0.01	0.01
			HAP (excluding Pb)	0.93	1.36
			Formaldehyde	0.25	0.36
			CO_2	262,705.55	383,550.10
			CH_4	4.85	7.07
			N_2O	0.48	0.71
			CO_2e	262,957.50	383,917.95

TEXAS COMMISSION ON ENVIRONMENTAL QUALITY

Table 1(a) Emission Point Summary

Date:	7/22/2013	**Permit No.:**	TBD	**Regulated Entity No.:**	TBD
Area Name:	Tenaska Roans Prairie Generating Station			**Customer Reference No.:**	CN600698948

Review of applications and issuance of permits will be expedited by supplying all necessary information requested on this Table.

AIR CONTAMINANT DATA					
1. Emission Point			**2. Component or Air Contaminant Name**	**3. Air Contaminant Emission Rate**	
(A) EPN	**(B) FIN**	**(C) NAME**		**(A) POUND**	**(B) TPY**
2	2	Unit 2 (GE 7FA.04 Turbine)	NO_X	72.90	106.43
			NO_X (MSS)	82.32	8.76
			CO	35.01	51.11
			CO (MSS)	225.01	69.35
			VOC	3.39	4.95
			VOC (MSS)	19.71	5.48
			SO_2	2.73	4.10
			PM	8.86	13.29
			PM_{10}	8.86	13.29
			$PM_{2.5}$	8.86	13.29
			H_2SO_4	0.28	0.42
			Pb	0.01	0.01
			HAP (excluding Pb)	0.93	1.36
			Formaldehyde	0.25	0.36
			CO_2	262,705.55	383,550.10
			CH_4	4.85	7.07
			N_2O	0.48	0.71
			CO_2e	262,957.50	383,917.95

TEXAS COMMISSION ON ENVIRONMENTAL QUALITY

Table 1(a) Emission Point Summary

Date:	7/22/2013	**Permit No.:**	TBD	**Regulated Entity No.:**	TBD
Area Name:	Tenaska Roans Prairie Generating Station			**Customer Reference No.:**	CN600698948

Review of applications and issuance of permits will be expedited by supplying all necessary information requested on this Table.

AIR CONTAMINANT DATA					
1. Emission Point			**2. Component or Air Contaminant Name**	**3. Air Contaminant Emission Rate**	
(A) EPN	**(B) FIN**	**(C) NAME**		**(A) POUND**	**(B) TPY**
3	3	Unit 3 (GE 7FA.04 Turbine)	NO_X	72.90	106.43
			NO_X (MSS)	82.32	8.76
			CO	35.01	51.11
			CO (MSS)	225.01	69.35
			VOC	3.39	4.95
			VOC (MSS)	19.71	5.48
			SO_2	2.73	4.10
			PM	8.86	13.29
			PM_{10}	8.86	13.29
			$PM_{2.5}$	8.86	13.29
			H_2SO_4	0.28	0.42
			Pb	0.01	0.01
			HAP (excluding Pb)	0.93	1.36
			Formaldehyde	0.25	0.36
			CO_2	262,705.55	383,550.10
			CH_4	4.85	7.07
			N_2O	0.48	0.71
			CO_2e	262,957.50	383,917.95
EMGEN	EMGEN	Emergency Generator Engine	NO_X	30.91	1.55
			CO	16.91	0.85
			VOC	2.07	0.10
			SO_2	0.03	<0.01
			PM	0.97	0.05
			PM_{10}	0.97	0.05
			$PM_{2.5}$	0.97	0.05
			H_2SO_4	<0.01	<0.01
			HAP (excluding Pb)	0.03	<0.01
			Formaldehyde	<0.01	<0.01
			CO_2	3,125.45	156.27
			CH_4	0.13	0.01
			N_2O	0.03	<0.01
			CO_2e	3,135.97	156.80

TEXAS COMMISSION ON ENVIRONMENTAL QUALITY

Table 1(a) Emission Point Summary

Date:	7/22/2013	**Permit No.:**	TBD	**Regulated Entity No.:**	TBD
Area Name:	Tenaska Roans Prairie Generating Station			**Customer Reference No.:**	CN600698948

Review of applications and issuance of permits will be expedited by supplying all necessary information requested on this Table.

AIR CONTAMINANT DATA					
1. Emission Point			**2. Component or Air Contaminant Name**	**3. Air Contaminant Emission Rate**	
(A) EPN	**(B) FIN**	**(C) NAME**		**(A) POUND**	**(B) TPY**
FWPUMP	FWPUMP	Fire Water Pump	NO_X	3.78	0.19
			CO	3.84	0.19
			VOC	1.45	0.07
			SO_2	0.01	<0.01
			PM	0.19	0.01
			PM_{10}	0.19	0.01
			$PM_{2.5}$	0.19	0.01
			H_2SO_4	<0.01	<0.01
			HAP (excluding Pb)	0.02	<0.01
			Formaldehyde	<0.01	<0.01
			CO_2	654.79	32.74
			CH_4	0.03	<0.01
			N_2O	0.01	<0.01
			CO_2e	657.00	32.85
CBFUG	CBFUG	Circuit Breaker Fugitives	SF_6	<0.01	0.01
			CO_2e	47.75	209.13
MSSFUG	MSSFUG	Maintenance Activites	NO_X	<0.01	<0.01
			CO	<0.01	<0.01
			VOC	0.30	<0.01
			PM	0.20	0.04
			PM_{10}	0.20	0.04
			$PM_{2.5}$	0.20	0.04
			HAP (excluding Pb)	0.30	<0.01
			CO_2	0.92	0.01
			CH_4	16.70	0.11
			CO_2e	351.62	2.42
FUG	FUG	Fugitives	VOC	0.01	0.06
			HAP (excluding Pb)	0.01	0.06
			CO_2	0.04	0.18
			CH_4	0.75	3.30
			CO_2e	15.86	69.46

EPN = Emission Point Number
FIN = Facility Identification Number

TEXAS COMMISSION ON ENVIRONMENTAL QUALITY

Table 1(a) Emission Point Summary

Date:	7/22/2013	**Permit No.:**	TBD	**Regulated Entity No.:**	TBD
Area Name:	Tenaska Roans Prairie Generating Station			**Customer Reference No.:**	CN600698948

Review of applications and issuance of permits will be expedited by supplying all necessary information requested on this Table.

AIR CONTAMINANT DATA			**EMISSION POINT DISCHARGE PARAMETERS**											
1. Emission Point			**4. UTM Coordinates of Emission Point**			**Source**								
						5. Building	**6. Height Above**	**7. Stack Exit Data**			**8. Fugitives**			
EPN (A)	**FIN (B)**	**Name (C)**	**Zone**	**East (Meters)**	**North (Meters)**	**Height (Ft.)**	**Ground (Ft.)**	**Diameter (Ft.) (A)**	**Velocity (FPS) (B)**	**Temperature (°F) (C)**	**Length (Ft.) (A)**	**Width (Ft.) (B)**	**Axis Degrees (C)**
1	1	Unit 1 (GE 7FA.04 Turbine)	15	219,403	3,387,566	21.0	60.0	20.0	225.2	1,099	--	--	--
2	2	Unit 2 (GE 7FA.04 Turbine)	15	219,420	3,387,523	21.0	60.0	20.0	225.2	1,099	--	--	--
3	3	Unit 3 (GE 7FA.04 Turbine)	15	219,438	3,387,480	21.0	60.0	20.0	225.2	1,099	--	--	--
EMGEN	EMGEN	Emergency Generator Engine	15	219,528	3,387,595	21.0	14.0	1.0	323.4	768	--	--	--
FWPUMP	FWPUMP	Fire Water Pump	15	219,380	3,387,593	10.5	14.0	1.0	75.9	884	--	--	--
CBFUG	CBFUG	Circuit Breaker Fugitives	15	219,509	3,387,556	--	3.0	--	--	--	850	660	77 W
MSSFUG	MSSFUG	Maintenance Activites	15	219,509	3,387,556	--	3.0	--	--	--	850	660	77 W
FUG	FUG	Fugitives	15	219,509	3,387,556	--	3.0	--	--	--	850	660	77 W

EPN = Emission Point Number
FIN = Facility Identification Number

Table B-1
TRPP
Tenaska Roans Prairie Generating Station
GHG BACT Analysis
Conceptual Cost Estimate for Carbon Capture and Sequestration

Post-Combustion CO_2 Capture and Compression		
Capital [1]	$890/kW	$585,971,629
Annual O&M [1]	$0.00124/kWh	$9,565,360
Annual Fuel [2]	14.7% fuel use at $4/MMBtu	$11,888,654

Pipeline Cost Breakdown [3]		
L, Pipeline Length (miles)		10
D, Pipeline Diameter (inches)		10
Pipeline Costs		
Materials	$64,632 + $1.85 x L x (330.5 x D^2 + 686.7 x D20 + 26,960)	$1,301,857
Labor	$341,627 + $1.85 x L x (343.2 x D^2 + 2074 x D + 170,013)	$4,505,478
Miscellaneous	$150,166 + $1.58 x L x (8,417 x D + 7,234)	$1,594,349
Right of Way	$48,037 + $1.2 x L x (577 x D + 29,788)	$474,733
Other Capital		
CO_2 Surge Tank	Fixed	$1,150,636
Pipeline Control System	Fixed	$110,632
O&M		
Fixed O&M ($/year)	$8,632 x L	$86,320

Geologic Storage Costs [3]		
Number of Injection Wells		1
Well Depth (m)		2,134
CO_2 Captured (tons)		1,150,246.80
Capital		
Site Screening and Evaluation	Fixed	$4,738,488
Injection Wells	$240,714 x $e^{0.0008 \text{ x Well Depth}}$	$1,327,177
Injection Equipment	$94,029 x $(7{,}839/(280 \text{ x Number of Injection Wells}))^{0.5}$	$497,523
Liability Bond	Fixed	$5,000,000
Declining Capital Funds		
Pore Space Acquisition	$0.334/short ton CO_2	$384,182
O&M		
Normal Daily Expenses	$11,566/Injection Well	$11,566
Consumables	$2,995/yr/ton CO_2/day	$9,438,326
Surface Maintenance	$23,478 x $(7{,}839/(280 \text{ x Number of Injection Wells}))^{0.5}$	$124,226
Subsurface Maintenance	$7.08/ft-depth/Injection Well	$15,109

Annualized Cost Estimate	
Economic Life, years	20
Interest Rate (%)	10
Capital Costs	$607,056,683
O&M Costs (Annual)	$31,129,562
Capital Recovery	$71,304,650
Total Annualized Cost	$102,434,212
Total CO_2 Controlled (tpy)	1,150,247
CO_2 Cost Effectiveness ($/ton)	89

[1] Adapted from Cost and Performance Baseline For Fossil Energy Plants, Volume 1: Bituminous and Natural Gas to Electricity, DOE/2010/1397 (Revision 2, November 2010). Plant output converted from simple cycle to equivalent Frame 7EA combined cycle output to enable use of cost information (www.ge-energy.com/products and services/products/gas turbines heavy duty/7ea heavy duty gas turbine.jsp). Capital costs adjusted using the ENR Construction Cost Index to 2012 dollars. O&M costs not adjusted.

[2] Fuel costs represent the additional fuel necessary to compensate for parasitic load caused by the addition of CCS. Based on review of review of the plant heat rates used in Case 13 and 14 presented in Cost and Performance Baseline For Fossil Energy Plants, Volume 1: Bituminous and Natural Gas to Electricity, DOE/2010/1397 (Revision 2, November 2010), CCS imposes a 14.7% increase in the plant heat rate; therefore, 14.7% more fuel is necessary to meet plant output. That amount of output need to come from somewhere, and is assumed to be equivalent to the cost of fuel.

[3] Pipeline and Geologic Storage cost estimates based on National Energy Technology Laboratory (US DOE) document, *Estimating Carbon Dioxide Transport and Storage Costs* , DOE/NETL-2010/1447 (March 2010). The distance to the nearest storage formation was taken from the Gulf Coast Carbon Center. Grimes County is located on the Gulf Coast Oligocene Brine Formation, as a best case scenario it was assumed a brine formation disposal well would be available within 10 miles of the facility.

Table B-2
TRPP
Tenaska Roans Prairie Generating Station
Grimes County, Texas
Project Potential Emissions Increase - Siemens Option

Project: Three (3) Turbines, no base-line case (new facility)

Pollutant	Single (one) Siemens SGT6-5000F(5ee) Turbine Emissions (tpy)	Total for Three Siemens Turbines (tpy)	Emergency Generator (tpy)	Emergency Fire Pump (tpy)	Fugitive SF_6 Leakage (tpy)	Maintenance Emissions (tpy)	Fugitive Natural Gas Emissions (tpy)	Total Project Emissions (tpy)
NO_X	124.53	373.59	1.55	0.19	-	5.97E-07	-	375.32
CO	117.69	353.07	0.85	0.19	-	3.63E-07	-	354.10
VOC	13.58	40.73	0.10	0.07	-	2.05E-03	0.06	40.96
SO_2	4.54	13.61	1.46E-03	3.06E-04	-	-	-	13.61
PM	14.77	44.30	0.05	0.01	-	0.04	-	44.39
PM_{10}	14.77	44.30	0.05	0.01	-	0.04	-	44.39
$PM_{2.5}$	14.77	44.30	0.05	0.01	-	0.04	-	44.39
H_2SO_4	0.78	2.34	1.46E-04	3.06E-05	-	-	-	2.34
Lead	0.02	0.05	-	-	-	-	-	0.046
CO_2	425,954.12	1,277,862.35	156.27	32.74	-	0.01	0.18	1,278,051.55
CH_4	7.86	23.57	0.01	1.33E-03	-	0.11	3.30	26.99
N_2O	0.79	2.36	1.27E-03	2.66E-04	-	-	-	2.36
SF_6	-	-	-	-	0.01	-	-	0.01
GHG (CO_2e)	426,362.63	1,279,087.90	156.80	32.85	209.13	2.42	69.46	1,279,558.55
Total HAPs (excluding lead)	1.51	4.54	1.51E-03	7.78E-04	-	2.05E-03	0.06	4.60
Formaldehyde	0.40	1.21	7.56E-05	7.85E-06	-	-	-	1.21

Table B-3
TRPP
Tenaska Roans Prairie Generating Station
Grimes County, Texas
Project Potential Emissions Increase - GE 7FA.05 Option

Project: Three (3) Turbines, no base-line case (new facility)

Pollutant	Single (one) GE 7FA.05 Tubine Emissions (tpy)	Total for Three GE 7FA.05 Tubines Emissions (tpy)	Emergency Generator (tpy)	Emergency Fire Pump (tpy)	Fugitive SF_6 Leakage (tpy)	Maintenance Emissions (tpy)	Fugitive Natural Gas Emissions (tpy)	Total Project Emissions (tpy)
NO_X	122.77	368.31	1.55	0.19	-	5.97E-07	-	370.04
CO	126.74	380.21	0.85	0.19	-	3.63E-07	-	381.24
VOC	5.47	16.40	0.10	0.07	-	2.05E-03	0.06	16.63
SO_2	10.88	32.65	1.46E-03	3.06E-04	-	-	-	32.65
PM	15.07	45.20	0.05	0.01	-	0.04	-	45.29
PM_{10}	15.07	45.20	0.05	0.01	-	0.04	-	45.29
$PM_{2.5}$	15.07	45.20	0.05	0.01	-	0.04	-	45.29
H_2SO_4	0.45	1.34	1.46E-04	3.06E-05	-	-	-	1.34
Lead	0.02	0.05	-	-	-	-	-	0.045
CO_2	414,814.19	1,244,442.56	156.27	32.74	-	0.01	0.18	1,244,631.76
CH_4	7.65	22.95	0.01	1.33E-03	-	0.11	3.30	26.37
N_2O	0.77	2.30	1.27E-03	2.66E-04	-	-	-	2.30
SF_6	-	-	-	-	0.01	-	-	0.01
GHG (CO_2e)	415,212.02	1,245,636.06	156.80	32.85	209.13	2.42	69.46	1,246,106.71
Total HAPs (excluding lead)	1.47	4.42	1.51E-03	7.78E-04	-	2.05E-03	0.06	4.48
Formaldehyde	0.39	1.18	7.56E-05	7.85E-06	-	-	-	1.18

Table B-4
TRPP
Tenaska Roans Prairie Generating Station
Grimes County, Texas
Project Potential Emissions Increase - GE 7FA.04 Option

Project: Three (3) Turbines, no base-line case (new facility)

Pollutant	Single (one) GE 7FA.04 Tubine Emissions (tpy)	Total for Three GE 7FA.04 Tubine Emissions (tpy)	Emergency Generator (tpy)	Emergency Fire Pump (tpy)	Fugitive SF_6 Leakage (tpy)	Maintenance Emissions (tpy)	Fugitive Natural Gas Emissions (tpy)	Total Project Emissions (tpy)
NO_X	115.19	345.57	1.55	0.19	-	5.97E-07	-	347.30
CO	120.46	361.39	0.85	0.19	-	3.63E-07	-	362.43
VOC	5.06	15.17	0.10	0.07	-	2.05E-03	0.06	15.41
SO_2	9.46	28.39	1.46E-03	3.06E-04	-	-	-	28.39
PM	13.29	39.86	0.05	0.01	-	0.04	-	39.96
PM_{10}	13.29	39.86	0.05	0.01	-	0.04	-	39.96
$PM_{2.5}$	13.29	39.86	0.05	0.01	-	0.04	-	39.96
H_2SO_4	0.42	1.25	1.46E-04	3.06E-05	-	-	-	1.25
Lead	0.014	0.042	-	-	-	-	-	0.042
CO_2	383,550.10	1,150,650.29	156.27	32.74	-	0.01	0.18	1,150,839.49
CH_4	7.07	21.22	0.01	1.33E-03	-	0.11	3.30	24.64
N_2O	0.71	2.12	1.27E-03	2.66E-04	-	-	-	2.12
SF_6	-	-	-	-	0.00875	-	-	0.01
GHG (CO_2e)	383,917.95	1,151,753.84	156.80	32.85	209.13	2.42	69.46	1,152,224.49
Total HAPs (excluding lead)	1.36	4.08	1.51E-03	7.78E-04	-	2.05E-03	0.06	4.15
Formaldehyde	0.36	1.09	7.56E-05	7.85E-06	-	-	-	1.09

Table B-5
TRPP
Tenaska Roans Prairie Generating Station
Grimes County, Texas
Siemens SGT6-5000F Emissions Calculations

Potential Emissions - Siemens SGT6-5000F Gas Turbine

Parameter	Value	Units	Source
Turbine Max. Heat Input Rating	2,441	MMBtu/hr per turbine	Manufacturer's Specifications
Turbine Min. Heat Input Rating	1,250	MMBtu/hr per turbine	Manufacturer's Specifications
Number of Turbines	1		
Turbine Operating Time	2,920	hrs	Maximum allowable hours per year for a peaking unit

Pollutant	Emissions Factor		Emissions from turbine (lb/hr)	Emissions from turbine (tpy)	Reference Footnote
NO_X	9 ppmvd @ 15% O_2	0.0332 lb/MMBtu	80.96	118.20	[1,2]
CO	9 ppmvd @ 15% O_2	0.0202 lb/MMBtu	25.23	36.84	[1,2]
VOC	1 ppmvd @ 15% O_2	0.0013 lb/MMBtu	3.14	4.58	[1,2]
SO_2	0.5 gr/100 dscf	0.0012 lb/MMBtu	3.03	4.43	[3]
PM		0.004 lb/MMBtu	9.80	14.31	[4]
PM_{10}		0.004 lb/MMBtu	9.80	14.31	[4]
$PM_{2.5}$		0.004 lb/MMBtu	9.80	14.31	[4]
H_2SO_4	0.18 lb H_2SO_4/lb SO_2	0.00022 lb/MMBtu	0.54	0.78	[5]
Lead	0.005 lb/MMscf	4.35E-06 lb/MMBtu	0.0106	0.015	[6]
CO_2	54.22 kg/MMBtu	119.50 lb/MMBtu	291,749.39	425,954.12	[7]
CH_4	0.001 kg/MMBtu	0.002 lb/MMBtu	5.38	7.86	[8]
N_2O	0.0001 kg/MMBtu	0.0002 lb/MMBtu	0.54	0.79	[8]
CO_2e			292,029.20	426,362.63	[8]

[1] NO_X, CO, and VOC emission factors in ppmvd taken from BACT determination

[2] NO_X, CO, and VOC emission factors converted from ppmvd to lb/MMBtu using EPA Method 19 Equation 19-1 as shown for NO_X below

$$\frac{9 \text{ scf NOx}}{1{,}000{,}000 \text{ scf}} \cdot \frac{1 \text{ lbmol}}{385.3 \text{ scf}} \cdot \frac{46.01 \text{ lb}}{\text{lbmol}} \cdot \frac{8{,}710 \text{ scf}}{\text{MMBtu}} \cdot \frac{20.9}{20.9 - 15} = \frac{0.0332 \text{ lb NOx}}{\text{MMBtu}}$$

[3] SO_2: Estimated using mass balance calculation with all sulfur converted to SO_2, Max Heat Input. Natural gas @ 1,020 Btu/scf with sulfur content (gr/100 dcf) = 0.5

Sample calculation

$$\frac{0.50 \text{ gr S}}{100 \text{ dscf}} \cdot \frac{\text{scf}}{1{,}150 \text{ Btu}} \cdot \frac{1{,}000{,}000 \text{ Btu}}{\text{MMBtu}} \cdot \frac{1 \text{ lb}}{7{,}000 \text{ gr}} \cdot \frac{\text{lbmol S}}{32 \text{ lb S}} \cdot \frac{64 \text{ lb SO2}}{\text{lbmol } SO_2} = \frac{0.0012 \text{ lb SO2}}{\text{MMBtu}}$$

[4] PM emission rate, including condensible PM, furnished by Siemens. All PM is $PM_{2.5}$ or less, Presumed BACT.

[5] Ratio of sulfuric acid mist emissions estimated by Siemens as 0.6 lb/hr, to SO_2 at 3.4 lb/hr, assuming sulfur content of natural gas as 0.5 gr/100 scf. Emission rate shown was calculated using Siemens ratio of 0.6/3.4 applied to calculated SO_2 emission rate using actual sulfur content of natural gas used. See Note 4.

[6] No factor for Turbines, Lead emission factor from AP-42 Table 1.4-2 (0.0005 lb/MMscf), assumed natural gas heat value of 1,050 Btu/scf for boilers.

[7] Based on projected fuel composition from supplier, see Appendix D.

[8] Based on USEPA's Mandatory Reporting Rule, Table C-2. To convert to CO_2e, the following global warming potentials were used - CH_4 = 21, N_2O = 310.

Table B-5
TRPP
Tenaska Roans Prairie Generating Station
Grimes County, Texas
Siemens SGT6-5000F Emissions Calculations

Potential HAP Emissions - Siemens SGT6-5000F(5ee) Gas Turbine

Pollutant	Emissions Factor		Emissions from Turbine (lb/hr)	Emissions from Turbine (tpy)	Reference Footnote
Toluene	1.30E-04	lb/MMBtu	0.32	0.46	[1]
Naphthalene	1.30E-06	lb/MMBtu	3.17E-03	4.63E-03	[1]
Formaldehyde	1.13E-04	lb/MMBtu	0.28	0.40	[2]
Benzene	1.20E-05	lb/MMBtu	0.03	0.04	[1]
Acetaldehyde	4.00E-05	lb/MMBtu	0.10	0.14	[1]
Ethylbenzene	3.20E-05	lb/MMBtu	0.08	0.11	[1]
Propylene Oxide	2.90E-05	lb/MMBtu	0.07	0.10	[1]
Xylenes	6.40E-05	lb/MMBtu	0.16	0.23	[1]
1,3-Butadiene	4.30E-07	lb/MMBtu	1.05E-03	1.53E-03	[1]
PAH	2.20E-06	lb/MMBtu	0.01	0.01	[1]
Total	4.24E-04	lb/MMBtu	1.04	1.51	

[1] Based on AP-42, Table 3.1-3, Emissions factors for HAP from gas-fired stationary gas turbines.
[2] Average of stack test results from Kiamichi and Rolling Hills facilities.

Table B-6
TRPP
Tenaska Roans Prairie Generating Station
Grimes County, Texas
GE 7FA.05 Emissions Calculations

Potential Emissions - GE 7FA.05 Gas Turbine

Parameter	Value	Unit	Source
Turbine Max. Heat Input Rating	2,378	MMBtu/hr per turbine	Manufacturer's Specification
Number of Turbines	1		
Turbine Operating Time	2,920	hours per year	Maximum allowable hours per year for a peaking unit

Pollutant	Emissions Factor		Emissions from turbine (lb/hr)	Emissions from turbine (tpy)	Reference Footnote
NO_X	9 ppmvd @ 15% O_2	0.0332 lb/MMBtu	78.84	115.10	[1,2]
CO	7.3 ppmvd @ 15% O_2	0.0164 lb/MMBtu	38.93	56.84	[1,2]
VOC	1.2 ppmvd @ 15% O_2	0.0015 lb/MMBtu	3.66	5.35	[1,2]
SO_2	0.5 gr/100 dscf	0.0012 lb/MMBtu	2.95	4.31	[3]
PM		0.00423 lb/MMBtu	10.05	14.67	[4]
PM_{10}		0.00423 lb/MMBtu	10.05	14.67	[4]
$PM_{2.5}$		0.00423 lb/MMBtu	10.05	14.67	[4]
H_2SO_4	0.10 lb H_2SO_4/lb SO_2	0.00013 lb/MMBtu	0.30	0.45	[5]
Lead	0.005 lb/MMscf	4.35E-06 lb/MMBtu	0.0103	0.015	[6]
CO_2	54.22 kg/MMBtu	119.50 lb/MMBtu	284,119.31	414,814.19	[7]
CH_4	0.001 kg/MMBtu	0.002 lb/MMBtu	5.24	7.65	[8]
N_2O	0.0001 kg/MMBtu	0.0002 lb/MMBtu	0.52	0.77	[8]
CO_2e			284,391.79	415,212.02	[8]

[1] NO_X, CO, and VOC emission factors in ppmvd taken from BACT determination

[2] NO_X, CO, and VOC emission factors converted from ppmvd to lb/MMBtu using EPA Method 19 Equation 19-1 as shown for NO_X below

$$\frac{9 \text{ scf NOx}}{1{,}000{,}000 \text{ scf}} \cdot \frac{1 \text{ lbmol}}{385.3 \text{ scf}} \cdot \frac{46.01 \text{ lb}}{\text{lbmol}} \cdot \frac{8{,}710 \text{ scf}}{\text{MMBtu}} \cdot \frac{20.9}{20.9 - 15} = \frac{0.0332 \text{ lb NOx}}{\text{MMBtu}}$$

[3] SO_2: Esimated using mass balance calculation with all sulfur converted to SO_2, Max Heat Input. Natural gas @ 1,150 Btu/scf with sulfur content (gr/100 cf) = 0.5

Sample calculation

$$\frac{0.50 \text{ gr S}}{100 \text{ dscf}} \cdot \frac{\text{scf}}{1{,}150 \text{ Btu}} \cdot \frac{1{,}000{,}000 \text{ Btu}}{\text{MMBtu}} \cdot \frac{1 \text{ lb}}{7{,}000 \text{ gr}} \cdot \frac{\text{lbmol S}}{32 \text{ lb S}} \cdot \frac{64 \text{ lb SO2}}{\text{lbmol } SO_2} = \frac{0.0012 \text{ lb SO2}}{\text{MMBtu}}$$

[4] All PM is $PM_{2.5}$ or less and includes condensible PM, Presumed BACT

[5] Ratio of sulfuric acid mist emissions estimated by GE as 0.16 lb/hr, with SO_2 at 1.55 lb/hr, and assumes sulfur content of natural gas as 8 ppmw. Emission rate shown was calculated using GE ratio of 0.16/1.55 applied to calculated SO_2 emission rate using actual sulfur content of natural gas used. See Note 4.

[6] No factor for Turbines, Lead emission factor from AP-42 Table 1.4-2 (0.0005 lb/MMscf), assumed natural gas heat value of 1,150 Btu/scf for boilers.

[7] Based on projected fuel composition from supplier, see Appendix D.

[8] Based on USEPA's Mandatory Reporting Rule, Table C-2. To convert to CO_2e, the following global warming potentials were used - CH_4 = 21, N_2O = 310.

Table B-6
TRPP
Tenaska Roans Prairie Generating Station
Grimes County, Texas
GE 7FA.05 Emissions Calculations

Potential HAP Emissions- GE 7FA.05 Gas Turbine

Pollutant	Emissions Factor		Emissions from Turbine (lb/hr)	Emissions from Turbine (tpy)	Reference Footnote
Toluene	1.30E-04	lb/MMBtu	0.31	0.45	[1]
Naphthalene	1.30E-06	lb/MMBtu	3.09E-03	4.51E-03	[1]
Formaldehyde	1.13E-04	lb/MMBtu	0.27	0.39	[2]
Benzene	1.20E-05	lb/MMBtu	0.03	0.04	[1]
Acetaldehyde	4.00E-05	lb/MMBtu	0.10	0.14	[1]
Ethylbenzene	3.20E-05	lb/MMBtu	0.08	0.11	[1]
Propylene Oxide	2.90E-05	lb/MMBtu	0.07	0.10	[1]
Xylenes	6.40E-05	lb/MMBtu	0.15	0.22	[1]
1,3-Butadiene	4.30E-07	lb/MMBtu	1.02E-03	1.49E-03	[1]
PAH	2.20E-06	lb/MMBtu	5.23E-03	0.01	[1]
Total	4.24E-04	lb/MMBtu	1.01	1.47	

[1] Based on AP-42, Table 3.1-3, Emissions factors for HAP from gas-fired stationary gas turbines.
[2] Average of stack test results from Kiamichi and Rolling Hills facilities.

Table B-7
TRPP
Tenaska Raons Prairie Generating Station
Grimes County, Texas
GE 7FA.04 Emissions Calculations

Potential Emissions - GE 7FA.04 Gas Turbine

Parameter	Value	Unit	Source
Turbine Max. Heat Input Rating	2,198	MMBtu/hr per turbine	Manufacturer's Specification
Number of Turbines	1		
Turbine Operating Time	2,920	hours per year	Maximum allowable hours per year for a peaking unit

Pollutant	Emissions Factor		Emissions from turbine (lb/hr)	Emissions from turbine (tpy)	Reference Footnote
NO_X	9 ppmvd @ 15% O_2	0.0332 lb/MMBtu	72.90	106.43	[1,2]
CO	7.1 ppmvd @ 15% O_2	0.0159 lb/MMBtu	35.01	51.11	[1,2]
VOC	1.2 ppmvd @ 15% O_2	0.0015 lb/MMBtu	3.39	4.95	[1,2]
SO_2	0.5 gr/100 dscf	0.0012 lb/MMBtu	2.73	3.99	[3]
PM		0.00403 lb/MMBtu	8.86	12.93	[4]
PM_{10}		0.00403 lb/MMBtu	8.86	12.93	[4]
$PM_{2.5}$		0.00403 lb/MMBtu	8.86	12.93	[4]
H_2SO_4	0.10 lb H_2SO_4/lb SO_2	0.00013 lb/MMBtu	0.28	0.42	[5]
Lead	0.005 lb/MMscf	4.35E-06 lb/MMBtu	0.0096	0.014	[6]
CO_2	54.22 kg/MMBtu	119.50 lb/MMBtu	262,705.55	383,550.10	[7]
CH_4	0.001 kg/MMBtu	0.002 lb/MMBtu	4.85	7.07	[8]
N_2O	0.0001 kg/MMBtu	0.0002 lb/MMBtu	0.48	0.71	[8]
CO_2e			262,957.50	383,917.95	[8]

[1] NO_X, CO, and VOC emission factors in ppmvd taken from BACT determination

[2] NO_X, CO, and VOC emission factors converted from ppmvd to lb/MMBtu using EPA Method 19 Equation 19-1 as shown for NO_X below

$$\frac{9 \text{ scf NOx}}{1{,}000{,}000 \text{ scf}} \cdot \frac{1 \text{ lbmol}}{385.3 \text{ scf}} \cdot \frac{46.01 \text{ lb}}{\text{lbmol}} \cdot \frac{8{,}710 \text{ scf}}{\text{MMBtu}} \cdot \frac{20.9}{20.9 - 15} = \frac{0.0332 \text{ lb NOx}}{\text{MMBtu}}$$

[3] SO_2: Esimated using mass balance calculation with all sulfur converted to SO_2, Max Heat Input. Natural gas @ 1150 Btu/scf with sulfur content (gr/100 cf) = 0.5

Sample calculation

$$\frac{0.50 \text{ gr S}}{100 \text{ dscf}} \cdot \frac{\text{scf}}{1{,}020 \text{ Btu}} \cdot \frac{1{,}000{,}000 \text{ Btu}}{\text{MMBtu}} \cdot \frac{1 \text{ lb}}{7{,}000 \text{ gr}} \cdot \frac{\text{lbmol S}}{32 \text{ lb S}} \cdot \frac{64 \text{ lb SO2}}{\text{lbmol } SO_2} = \frac{0.0014 \text{ lb SO2}}{\text{MMBtu}}$$

[4] All PM is $PM_{2.5}$ or less and includes condensible PM, Presumed BACT

[5] Ratio of sulfuric acid mist emissions estimated by GE as 0.16 lb/hr, with SO_2 at 1.55 lb/hr, and assumes sulfur content of natural gas as 8 ppmw. Emission rate shown was calculated using GE ratio of 0.16/1.55 applied to calculated SO_2 emission rate using actual sulfur content of natural gas used. See Note 4.

[6] No factor for Turbines, Lead emission factor from AP-42 Table 1.4-2 (0.0005 lb/MMscf), assumed natural gas heat value of 1,150 Btu/scf for boilers.

[7] Based on projected fuel composition from supplier, see Appendix D.

[8] Based on USEPA's Mandatory Reporting Rule, Table C-2. To convert to CO_2e, the following global warming potentials were used - CH_4 = 21, N_2O = 310.

Table B-7
TRPP
Tenaska Raons Prairie Generating Station
Grimes County, Texas
GE 7FA.04 Emissions Calculations

Potential HAP Emissions- GE 7FA.04 Gas Turbine

Pollutant	Emissions Factor		Emissions from Turbine (lb/hr)	Emissions from Turbine (tpy)	Reference Footnote
Toluene	1.30E-04	lb/MMBtu	0.29	0.42	[1]
Naphthalene	1.30E-06	lb/MMBtu	2.86E-03	4.17E-03	[1]
Formaldehyde	1.13E-04	lb/MMBtu	0.25	0.36	[2]
Benzene	1.20E-05	lb/MMBtu	0.03	0.04	[1]
Acetaldehyde	4.00E-05	lb/MMBtu	0.09	0.13	[1]
Ethylbenzene	3.20E-05	lb/MMBtu	0.07	0.10	[1]
Propylene Oxide	2.90E-05	lb/MMBtu	0.06	0.09	[1]
Xylenes	6.40E-05	lb/MMBtu	0.14	0.21	[1]
1,3-Butadiene	4.30E-07	lb/MMBtu	9.45E-04	1.38E-03	[1]
PAH	2.20E-06	lb/MMBtu	4.84E-03	0.01	[1]
Total	4.24E-04	lb/MMBtu	0.93	1.36	

[1] Based on AP-42, Table 3.1-3, Emissions factors for HAP from gas-fired stationary gas turbines.
[2] Average of stack test results from Kiamichi and Rolling Hills facilities.

Table B-8
TRPP
Tenaska Roans Prairie Generating Station
Grimes County, Texas
Emergency Generator Engine Emissions Calculations

Project: Three (3) Turbines, no base-line case (new facility)

Potential Emissions - Emergency Generator

Parameter	Value	Units	Source
Manufacturer =	Caterpillar (or similar)		
Generator Model =	2000 kW		
Engine Model =	3516C ATAAC		
Serial Number =	TBD		
Fuel Type =	Diesel		
Fuel Density =	7.001	lb/gal	Manufacturer's Specification Sheet November 6, 2012
Fuel High Heat Value =	138,000	Btu/gal	40 CFR Part 98 Subpart C, Table C-1
Purpose =	Emergency Generator		
Displacement =	4,210.64	in^3	Manufacturer's Gen Set Package Performance Data [DM 8263]
Displacement =	69	L	Manufacturer's Gen Set Package Performance Data [DM 8263]
Number of Cylinders =	16		Manufacturer's Gen Set Package Performance Data [DM 8263]
Engine Rating =	2,937	hp	Manufacturer's Gen Set Package Performance Data [DM 8263]
Fuel Consumption =	138.9	gal/hr	Manufacturer's Gen Set Package Performance Data [DM 8263]
Heat Rate =	19.17	MMBtu/hr	Fuel Consumption * Fuel High Heat Value
Annual Hours of Operation =	100	hr/yr	Provided by TENASKA

Pollutant	Emission Factor			Emissions from Engine (lb/hr)	Emissions from Engine (tpy)	Reference Footnote
NO_X+NMHC	6.4	g/kW-hr	0.01 lb/hp-hr	30.91	1.55	[1]
CO	3.5	g/kW-hr	5.76E-03 lb/hp-hr	16.91	0.85	[1]
VOC (TOC)			7.05E-04 lb/hp-hr	2.07	0.10	[2]
SO_2	15	ppmw S	9.93E-06 lb/hp-hr	0.03	0.00	[3]
PM	0.20	g/kW-hr	3.29E-04 lb/hp-hr	0.97	0.05	[1]
PM_{10}	0.20	g/kW-hr	3.29E-04 lb/hp-hr	0.97	0.05	[4]
$PM_{2.5}$	0.20	g/kW-hr	3.29E-04 lb/hp-hr	0.97	0.05	[4]
H_2SO_4	0.10	lb H_2SO_4/lb SO_2	9.93E-07 lb/hp-hr	2.92E-03	1.46E-04	[5]
Total HAP	0.0016	lb/MMBtu	1.03E-05 lb/hp-hr	0.03	1.51E-03	[6]
CO_2	73.96	kg/MMBtu	1.06 lb/hp-hr	3,125.45	156.27	[7]
CH_4	3.0E-03	kg/MMBtu	4.32E-05 lb/hp-hr	0.13	0.01	[7]
N_2O	6.0E-04	kg/MMBtu	8.63E-06 lb/hp-hr	0.03	1.27E-03	[7]
CO_2e				3,135.97	156.80	[7]

Table B-8
TRPP
Tenaska Roans Prairie Generating Station
Grimes County, Texas
Emergency Generator Engine Emissions Calculations

Project: Three (3) Turbines, no base-line case (new facility)

[1] Engine will be subject to ICE NSPS (40 CFR Part 60, Subpart IIII) and therefore, subject to Tier 2 emissions limits (40 CFR 89.112) for engines greater than 750 hp. Emission factors are based on Tier 2 limits.

[2] Based on AP-42, Table 3.4-1, Gaseous Emission Factors for Large Stationary Diesel and All Stationary Duel-Fired Engines

[3] SO_2 emissions were estimated using a mass balance calculation based on the use of ultra-low sulfur content fuel and the fuel consumption rate.

Sample calculation:

$$\frac{15 \text{ lb S}}{1{,}000{,}000 \text{ lb diesel}} \cdot \frac{7.001 \text{ lb diesel}}{\text{gal diesel}} \cdot \frac{138.9 \text{ gal diesel}}{\text{hr}} \cdot \frac{1}{2{,}937 \text{ hp}} \cdot \frac{\text{lbmol S}}{32 \text{ lb S}} \cdot \frac{64 \text{ lb SO2}}{\text{lbmol } SO_2} = \frac{9.93\text{E-06 lb SO2}}{\text{hp-hr}}$$

[4] Assumed that PM was $PM_{2.5}$.

[5] Estimated as 10% of SO_2 emissions

[6] Based on AP-42, Tables 3.4-3 and 3.4-4, Hazardous Air Pollutant Emission Factors for Large Stationary Diesel Engines.

[7] Based on USEPA's Mandatory Reporting Rule, Tables C-1 and C-2. To convert to CO_2e, the following global warming potentials were used - CH_4 = 21, N_2O = 310.

Table B-9
TRPP
Tenaska Roans Prairie Generating Station
Grimes County, Texas
Emergency Firewater Pump Engine Emissions Calculations

Project: Three (3) Turbines, no base-line case (new facility)

Potential Emissions - Firewater Pump

Parameter	Value	Units	Source
Manufacturer =	Cummins (or similar)		
Pump Model =			
Engine Model =	CFP15E-F30		
Serial Number =	TBD		
Fuel Type =	Diesel		
Fuel Density =	7.001	lb/gal	Manufacturer's Specification Sheet November 6, 2012
Fuel High Heat Value =	138,000	Btu/gal	40 CFR Part 98 Subpart C, Table C-1
Purpose =	Firewater Pump		
Displacement =	915.00	in^3	Manufacturer's Specification SheetCFP15E-F10-F70 (@2100 rpm)
Displacement =	15	L	Manufacturer's Specification SheetCFP15E-F10-F70 (@2100 rpm)
Number of Cylinders =	6		Manufacturer's Specification SheetCFP15E-F10-F70 (@2100 rpm)
Engine Rating =	575	hp	Manufacturer's Specification SheetCFP15E-F10-F70 (@2100 rpm)
Fuel Consumption =	29.1	gal/hr	Manufacturer's EPA & CARB Tier 3 Emission Data Sheet March 24, 2010
Heat Rate =	4.02	MMBtu/hr	Fuel Consumption * Fuel High Heat Value
Annual Hours of Operation =	100	hr/yr	Provided by TENASKA

Pollutant	Emission Factor		Emissions from Engine (lb/hr)	Emissions from Engine (tpy)	Reference Footnote
NO_X+NMHC	4.0 g/kW-hr	0.01 lb/hp-hr	3.78	0.19	[1]
CO		6.68E-03 lb/hp-hr	3.84	0.19	[2]
VOC (TOC)		2.51E-03 lb/hp-hr	1.45	0.07	[2]
SO_2	15 ppmw S	1.06E-05 lb/hp-hr	0.01	3.06E-04	[3]
PM	0.20 g/kW-hr	3.29E-04 lb/hp-hr	0.19	0.01	[1]
PM_{10}	0.20 g/kW-hr	3.29E-04 lb/hp-hr	0.19	0.01	[4]
$PM_{2.5}$	0.20 g/kW-hr	3.29E-04 lb/hp-hr	0.19	0.01	[4]
H_2SO_4	0.10 lb H_2SO_4/lb SO_2	1.06E-06 lb/hp-hr	6.11E-04	3.06E-05	[5]
Total HAP	0.0039 lb/MMBtu	2.71E-05 lb/hp-hr	0.02	7.78E-04	[6]
CO_2	73.96 kg/MMBtu	1.14 lb/hp-hr	654.79	32.74	[7]
CH_4	3.0E-03 kg/MMBtu	4.62E-05 lb/hp-hr	0.03	1.33E-03	[7]
N_2O	6.0E-04 kg/MMBtu	9.24E-06 lb/hp-hr	0.01	2.66E-04	[7]
CO_2e			657.00	32.85	[7]

Table B-9
TRPP
Tenaska Roans Prairie Generating Station
Grimes County, Texas
Emergency Firewater Pump Engine Emissions Calculations

Project: Three (3) Turbines, no base-line case (new facility)

[1] Engine will be subject to ICE NSPS (40 CFR Part 60, Subpart IIII). Emission factors are based on Table 4 to Subpart IIII.

[2] Based on AP-42, Table 3.3-1, Emission Factors for Uncontrolled Gasoline and Diesel Industrial Engines

[3] SO_2 emissions were estimated using a mass balance calculation based on the use of ultra-low sulfur content fuel and the fuel consumption rate.

Sample calculation:

$$\frac{15 \text{ lb S}}{1{,}000{,}000 \text{ lb diesel}} \cdot \frac{7.001 \text{ lb diesel}}{\text{gal diesel}} \cdot \frac{29.1 \text{ gal diesel}}{\text{hr}} \cdot \frac{1}{575 \text{ hp}} \cdot \frac{\text{lbmol S}}{32 \text{ lb S}} \cdot \frac{64 \text{ lb SO2}}{\text{lbmol } SO_2} = \frac{1.06\text{E-05 lb SO2}}{\text{hp-hr}}$$

[4] Assumed that PM was $PM_{2.5}$.

[5] Estimated as 10% of SO_2 emissions

[6] Based on AP-42, Table 3.3-2, Hazardous Air Pollutant Emission Factors for Uncontrolled Diesel Engines.

[7] Based on USEPA's Mandatory Reporting Rule, Tables C-1 and C-2. To convert to CO_2e, the following global warming potentials were used - CH_4 = 21, N_2O = 310.

Table B-10
TRPP
Tenaska Roans Prairie Generating Station
Grimes County, Texas
Fugitive Emissions Calculations

Project: Three (3) Turbines, no base-line case (new facility)

Potential Emissions - Fugitive Components

Annual Operating Hours	8,760	hr/yr
VOC Content of Natural Gas [1]	1.78	wt%
HAP Content of Natural Gas [2]	1.78	wt%
CO_2 Content of Natural Gas [3]	5.49	wt%
CH_4 Content of Natural Gas [4]	100	wt%

Component and Service	Number of Components [5]	Emission Factor [6]		Control Efficiency [7] (%)	Total Emissions lb/hr	Total Emissions tpy
Valves						
Gas/Vapor	936	0.0089	lb/hr-component	97	0.25	1.09
Light Liquid	0	0.0035	lb/hr-component	97	0	0
Heavy Liquid	0	0.0007	lb/hr-component	97	0	0
Pumps						
Light Liquid	0	0.0386	lb/hr-component	93	0	0
Heavy Liquid	0	0.0161	lb/hr-component	93	0	0
Flanges/Connectors						
Gas/Vapor	2,628	0.0029	lb/hr-component	97	0.23	1.00
Light Liquid	0	0.0005	lb/hr-component	97	0	0
Heavy Liquid	0	0.00007	lb/hr-component	97	0	0
Compressors						
Gas/Vapor	6	0.5027	lb/hr-component	95	0.15	0.66
Pressure Relief Valves						
Gas/Vapor	18	0.2293	lb/hr-component	97	0.12	0.54
Open Ended Lines						
All Liquids	0	0.004	lb/hr-component	97	0	0
				Total Emissions	0.75	3.30
				VOC Emissions [8]	0.01	0.06
				HAP Emissions [8]	0.01	0.06
				CO_2 Emissions [8]	0.04	0.18
				CH_4 Emissions [8]	0.75	3.30
				CO_2e Emissions [9]	15.86	69.46

[1] From Natural Gas Analysis provided by Tenaska on April 12, 2013.
[2] Conservatively assumed that HAP Content = VOC Content.
[3] Maximum pipeline specification (2 volume %) converted to weight percent assuming natural gas MW is equal to methane.
[4] Conservative assumption.
[5] Number of Components provided via email from Mr. Larry Carlson (Tenaska) on April 12, 2013.
[6] SOCMI without Ethylene (C_2) Fugitive Equipment Leak Factors from October 2000 Draft TCEQ Technical Guidance Package for Equipment Leak Fugitives.
[7] Control Efficiency for AVO Program from October 2000 Draft TCEQ Technical Guidance Package for Equipment Leak Fugitives.
[8] Total Emissions * Content of Natural Gas (wt%)
[9] Based on USEPA's Mandatory Reporting Rule, Table C-1. To convert to CO_2e, the following global warming potentials were used - CH_4 = 21, N_2O = 310.

Table B-11
TRPP
Tenaska Roans Prairie Generating Station
Grimes County, Texas
SF6 Circuit Breaker Emissions

Project: Three (3) Turbines, no base-line case (new facility)

GHG Emissions from SF_6 Insulated Electrical Equipment

Sulfur hexafluoride (SF_6) is used in high voltage electrical equipment as an insulator and/or arc quenching medium. Fugitive emissions of SF_6 may result due to equipment leakage. Because SF_6 is a very potent greenhouse gas its emissions have been included in the facility-wide GHG emission estimation.

Description of SF_6 containing equipment	Number of Pieces of Equipment	Weight of SF_6 per piece of Equipment (lb)	Weight of SF_6 per Equipment Type (lb)	IEC standard for equipment leakage [1] (% per year)	Fugitive SF_6 (lb/hr)	Fugitive SF_6 (ton/yr)	Global Warming Potential [2]	Fugitive CO_2e (lb/hr)	Fugitive CO_2e (ton/yr)
Circuit Breakers	7	500	3,500	0.50%	0.00200	0.00875	23,900	47.75	209.13
		TOTAL	3,500	0.50%	0.00200	0.00875	23,900	47.75	209.13

[1] IEC, International Electrotechnical Commission Standard 62271-1, 2004, assume 100% loss of content upon leakage.
[2] Based on USEPA's Mandatory Reporting Rule, Table A-1.

Table B-12
TRPP
Tenaska Roans Prairie Generating Station
Grimes County, Texas
MSS Emissions Calculations

Project: Three (3) Turbines, no base-line case (new facility)

Summary of Potential Emissions - Maintenance Operations

Pollutant	On-Line Turbine Washing (tpy)	Turbine Filter Changeouts (tpy)	Gaseous Fuel Venting (tpy)	CEMS Calibration (tpy)	Total Maintenance Emissions (tpy)
NO_X	-	-	-	5.97E-07	5.97E-07
CO	-	-	-	3.63E-07	3.63E-07
VOC	-	-	2.05E-03	-	2.05E-03
SO_2	-	-	-	-	-
PM	0.04	4.04E-05	-	-	0.04
PM_{10}	0.04	1.91E-05	-	-	0.04
$PM_{2.5}$	0.04	2.89E-06	-	-	0.04
H_2SO_4	-	-	-	-	-
Lead	-	-	-	-	-
CO_2	-	-	0.01	-	0.01
CH_4	-	-	0.11	-	0.11
N_2O	-	-	-	-	-
GHG (CO_2e)	-	-	2.42	-	2.42
Total HAPs (excluding lead)	-	-	2.05E-03	-	2.05E-03
Formaldehyde	-	-	-	-	-

Table B-12
TRPP
Tenaska Roans Prairie Generating Station
Grimes County, Texas
MSS Emissions Calculations

Potential Emissions - Gaseous Fuel Venting, Small Equipment and Fugitives

Emissions Calculation [1]

Piping Description	Initial Conditions				Final Conditions				Activity	VOC Emissions	
Location	Max Hourly Volume [2] V_i (ft^3)	Annual Volume [2] V_i (ft^3)	Pressure P_i (psia)	Temperature T_i (°F)	Standard Pressure P_f (psia)	Standard Temperature T_f (°F)	Max Hourly Volume [3] V_f (scf)	Volume [3] V_f (scf)	Frequency (hr/yr)	Hourly (lb/hr)	Annual (tpy)
Fuel Line	83	1,146	64.7	50	14.7	68	378.2	5,222.0	30	0.29	2.04E-03
Small Equipment	0.7	6.7	64.7	50	14.7	68	3.2	30.5	10	0.0025	1.19E-05
									Total VOC Emissions:	0.30	2.05E-03
									Total HAP Emissions:	0.30	2.05E-03
									Total CO_2 Emissions:	0.92	0.01
									Total CH_4 Emissions:	16.70	0.11
									Total CO_2e Emissions:	351.62	2.42

[1] Emission input data confirmed by Mr. Larry Carlson (Tenaska) on April 12, 2013
[2] Initial volumes of lines and gas condition provided by Mr. Larry Carlson(Tenaska)
[3] Final volume is calculated using Ideal Gas Law
[4] Additional assumptions:

Natural Gas Mw:	16.87	lb/lb-mole	(From Natural Gas Analysis provided by Tenaska on April 12, 2013)
VOC Content of Natural Gas	1.78%	by Wt.	(From Natural Gas Analysis provided by Tenaska on April 12, 2013)
HAP Content of Natural Gas	1.78%	by Wt.	(Conservatively assumed that HAP Content = VOC Content.)
CO2 Content of Natural Gas	5.49%	by Wt.	(Maximum pipeline specification (2 volume %) converted to weight percent assuming natural gas MW is equal to methane)
CH4 Content of Natural Gas	100.00%	by Wt.	(Conservative assumption)
Molar Volume of Gas	385.27	scf/lb-mol	(Based on Ideal Gas Law at Standard Pressure and Temperature - 14.7 psia and 68°F)

Based on USEPA's Mandatory Reporting Rule, Table C-1. To convert to CO_2e, the following global warming potentials were used - CH_4 = 21, N_2O = 310.

Example Calculation for Fuel Line:

Hourly Emissions (lb/hr) = $\frac{378.2\ scf}{hr} \cdot \frac{lb\text{-}mole}{385.27\ scf} \cdot \frac{16.80\ lb\ NG}{lb\text{-}mole} \cdot \frac{0.0178\ lb\ VOC}{lb\ Nat\ Gas}$ = 0.29 lb/hr

Annual Emissions (tpy) = $\frac{5{,}222\ scf}{yr} \cdot \frac{lb\text{-}mole}{385.27\ scf} \cdot \frac{16.80\ lb\ NG}{lb\text{-}mole} \cdot \frac{0.0178\ lb\ VOC}{lb\ Nat\ Gas} \cdot \frac{1\ ton}{2{,}000\ lb}$ = 0.0020 ton/yr

Recently Issued Permits and Pending Applications

Appendix C

July 2013
Project No. 0189555

Environmental Resources Management
15810 Park Ten Place, Suite 300
Houston, Texas 77084
(281) 600-1000

Table C-1
TRPP
Tenaska Roans Prairie Generating Station
Grimes County, TX
Recently Issued Permits and Applications Under Review for Greenhouse Gases from Combustion Turbines

No.	Permit Authority	Permit Number	Company Name Facility Name Location	#	Unit Description Model	Capacity		Control Technology	Thermal Efficiency BTU (HHV) per kW-hr (gross)	PTE tpy CO_2e	Proposed BACT Limits Parameter	 Units	Monitoring
1	USEPA R9	SD 11-01	Pio Pico Energy Center, LLC Pio Pico Energy Center CA	3	GE LMS100	100	MW	Simple cycle operation	N/A	N/A	1,328	lb/MWh	None proposed
2	USEPA R3	67-05009C	York Plant Holdings, LLC York Generation Facility PA	2	N/A	634	MMBtu/hr	Simple cycle operation Post combustion controls Fuel selection	N/A	N/A	1,330	lb/MWh	None proposed
3	USEPA R6	PSD-LA-703(M03)	Sabine Pass LNG, LP & Sabine Pass Liquefaction, LL Sabine Pass LNG Terminal LA	2	GE LM2500+G4	286	MMBtu/hr	Simple cycle operation Good combustion practices Fueled by natural gas	N/A	4,872,107	4,872,107	tpy CO2e	None proposed
4	USEPA R6	PSDTX1290	El Paso Electric Company Montana Power Station El Paso, TX	4	GE LMS100	100	MW	Efficient design Evaporative cooling Good operating practices Fuel selection	9,074	227,840	227,840	tpy CO2e	Fuel quality monitoring
5	USEPA R9	SE 09-01	City of Palmdale Palmdale Hybrid Power Project CA	2	GE 7FA	154	MW	Combined cycle operation	N/A	N/A	774	lb/MWh	None proposed
6	USEPA R5	81-11	Wolverine Power Supply Cooperative Inc. Sumpter Power Plant MI	1	GE PG7121	130	MW	Combined cycle operation	N/A	N/A	954	lb/MWh	None proposed
7	USEPA R3	55-00001E	Sunbury Generation LP Sunbury Generation LP/Sunbury SES PA	3	N/A	N/A	N/A	Combined cycle operation	N/A	N/A	281,727	lb/hr	None proposed
8	USEPA R3	52375-002	Gateway Green Energy Gateway Cogeneration 1, LLC - Smart Water Project VA	2	Rolls Royce Trent 60 WLE	593	MMBtu/hr	Combined cycle operation	N/A	295,961	295,961	tpy CO2e	None proposed
9	USEPA R3	08-00045A	Moxie Energy LLC Moxie Liberty LLC/Asylum Power Plt PA	2	N/A	2,890	MMBtu/hr	Good combustion practices Fueled by natural gas Efficient design	N/A	1,480,086	1,480,086	tpy CO2e	None proposed
Applications Pending													
10	USEPA R6	N/A	Calhoun Port Authority ES Joslin Power Station Point Comfort, TX	3	GE 7FA	208	MW	Combined cycle operation Efficient design Evaporative cooling Steam turbine bypass	N/A	N/A	7,730	Btu/kWh (HHV)	N/A
11	USEPA R6	N/A	Calpine Corporation Deer Park Energy Center Dallas, TX	1	Siemens 501F	180 725	MW MMBtu/hr	Combined cycle operation Efficient design Process monitoring	N/A	N/A	7,730	Btu/kWh (HHV)	N/A
12	USEPA R6	N/A	Copano Processing, LP Houston Central Gas Plant Sheridan, TX	2	Solar Mars 100	15,000	hp	Efficient design Waste heat recovery Process monitoring	N/A	58,672	1.16	ton CO2e/MMscf compressed	monitoring AFR monitoring Quarterly source test
13	USEPA R6	N/A	DCP Midstream, LP Hardin County NGL Fractionation Plant Hardin County, TX	2	Solar Saturn T-4700	43	MMBtu/hr	Efficient design Waste heat recovery Process monitoring	N/A	24,610	24,610	tpy CO2e	None proposed
14	USEPA R6	N/A	DCP Midstream, LP Jefferson County NGL Fractionation Plant Jefferson County, TX	2	Solar Saturn T-4700	43	MMBtu/hr	Efficient design Waste heat recovery Process monitoring	N/A	24,610	24,610	tpy CO2e	None proposed
15	USEPA R6	N/A	Exelon Generation Mountain Creek Steam Electric Station Dallas, TX	2	Siemens SGT6-5000F(4)	232	MW	Efficient design Good combustion practices Good operating practices Fuel selection	8,809	981,191	981,191 980,229 18.49 1.85	tpy CO2e tpy CO2 tpy CH4 tpy N2O	Flow meter and CEMS
16	USEPA R6	N/A	Freeport LNG Development Liquiefaction Plant Freeport, TX	1	GE Frame 7EA	87	MW	Efficient design Waste heat recovery Evaporative cooling	N/A	562,693	562,141 0.03 1.06	tpy CO2 tpy CH4 tpy N2O	Fuel monitoring or CEMS
17	USEPA R6	N/A	Golden Spread Electric Cooperative, Inc. GSEC Floydada Station Dallas, TX	1	GE 7F 5-Series	202	MW	Efficient design	N/A	538,754	532,007 124.97 13.3	tpy CO2 tpy CH4 tpy N2O	None proposed
18	USEPA R6	N/A	Golden Spread Electric Cooperative, Inc. Antelope Station Abernathy, Texas	1	GE 7F 5-Series	202	MW	Efficient design	N/A	538,754	532,007 124.97 13.3	tpy CO2 tpy CH4 tpy N2O	None proposed
19	USEPA R6	N/A	La Paloma Energy Center, LLC La Paloma Energy Center Harlingen, TX	2	GE F7FA	183	MW	Engergy Efficiency, Practices and Designs	7,528	1,300,674	1,299,423 24.10 2.40	tpy CO2 tpy CH4 tpy N2O	Fuel monitoring or CEMS
					Siemens SGT6-5000F(4)	265	MW		7,649	1,451,772	1,450,376 26.80 2.70	tpy CO2 tpy CH4 tpy N2O	
					Siemens SGT6-5000F(5)	271	MW		7,720	1,642,317	1,640,737 30.40 3.00	tpy CO2 tpy CH4 tpy N2O	

Table C-2
TRPP
Tenaska Roans Prairie Generating Station
Grimes County, TX
Recently Issued Permits and Applications Under Review for Greenhouse Gases from Fugitive Sources

RBLC ID	Facility Name	Permit Issuance Date	Process Name	Pollutant	Control Method Description	Emission Limit	Emission Limit Unit	Emission Limit Average Time Condition
NA		NA	Fugitive Emissions	Carbon Dioxide Equivalent (CO2e)	AVO Program	94	tons/yr	NA
TX-0612	THOMAS C. FERGUSON POWER PLANT	11/10/2011	Fugitive Natural Gas emissions_NG-FUG	Carbon Dioxide Equivalent (CO2e)	None	327.2	tons/yr	365 day rolling average
LA-0257	SABINE PASS LNG TERMINAL	12/6/2011	FUGITIVE EMISSIONS	Carbon Dioxide Equivalent (CO2e)	CONDUCT A LEAK DETECTION AND REPAIR (LDAR) PROGRAM	89,629	TONS/YR	ANNUAL MAXIMUM

Table C-3
TRPP
Tenaska Roans Prairie Generating Station
Grimes County, TX
Recently Issued Permits and Applications Under Review for Greenhouse Gases from Emergency Generators

RBLC ID	Facility Name	Permit Issuance Date	Process Name	Pollutant	Control Method Description	Emission Limit	Emission Limit Unit	Emission Limit Average Time Condition
*IA-0105	IOWA FERTILIZER COMPANY	10/26/2012	EMERGENCY GENERATOR	Carbon Dioxide	GOOD COMBUSTION PRACTICES	1.55	G/KW-H	AVERAGE OF 3 STACK TEST RUNS
*IA-0105	IOWA FERTILIZER COMPANY	10/26/2012	FIRE PUMP	Carbon Dioxide	GOOD COMBUSTION PRACTICES	1.55	G/KW-H	AVERAGE OF 3 STACK TEST RUNS
*VA-0319	GATEWAY COGENERATION 1, LLC - SMART WATER PROJECT	8/27/2012	FIRE WATER PUMP	Carbon Dioxide Equivalent (CO2e)	FUEL-EFFICIENT DESIGN	30.5	T/YR	12 MO ROLLING AVG
*IA-0105	IOWA FERTILIZER COMPANY	10/26/2012	FIRE PUMP	Carbon Dioxide Equivalent (CO2e)	GOOD COMBUSTION PRACTICES	91	TONS/YR	ROLLING 12 MONTH TOTAL
GA-0147	PYRAMAX CERAMICS, LLC - KING'S M:U FACILITY	1/27/2012	500 KW EMERGENCY DIESEL GENERATORS	Carbon Dioxide Equivalent (CO2e)		153	T/12-MO ROLLING AVG	COMBINED EMISSIONS
*IA-0105	IOWA FERTILIZER COMPANY	10/26/2012	EMERGENCY GENERATOR	Carbon Dioxide Equivalent (CO2e)	GOOD COMBUSTION PRACTICES	788.5	TONS/YR	ROLLING 12 MONTH TOTAL

Table C-4
TRPP
Tenaska Roans Prairie Generating Station
Grimes County, TX
Recently Issued Permits and Applications Under Review for Greenhouse Gases from SF6 Circuit Breakers

RBLC ID	Facility Name	Permit Issuance Date	Process Name	Pollutant	Control Method Description	Emission Limit	Emission Limit Unit	Emission Limit Average Time Condition
*CA-1212	PALMDALE HYBRID POWER PROJECT	10/18/2011	ENCLOSED PRESSURE SF6 CIRCUIT BREAKERS	Carbon Dioxide Equivalent (CO2e)		9.56	TPY	12-MONTH ROLLING TOTAL
*VA-0319	GATEWAY COGENERATION 1, LLC - SMART WATER PROJECT	8/27/2012	ELECTRIC CIRCUIT BREAKERS, (4)	Carbon Dioxide Equivalent (CO2e)	ENCLOSED PRESSURE CIRCUIT BREAKER.	28.6	T/YR	12 MO AVG
*CA-1223	PIO PICO ENERGY CENTER	11/19/2012	CIRCUIT BREAKERS	Carbon Dioxide Equivalent (CO2e)	INSTALL, OPERATE, AND MAINTAIN ENCLOSED-PRESSURE SF6 CIRCUIT BREAKERS WITH A MAXIMUM ANNUAL LEAKAGE RATE OF 0.5% BY WEIGHT	40.2	TPY	TONS PER CALENDAR YEAR

Supporting Documentation

Appendix D

July 2013
Project No. 0189555

Environmental Resources Management
15810 Park Ten Place, Suite 300
Houston, Texas 77084
(281) 600-1000

TRPP
Grimes County Peaking Unit
Grimes County, Texas
Turbine Efficiency with Conventional Start

Parameter	Units	Gas Turbines		
		Siemens	GE	
		SGT6-5000F	7FA.05	7FA.04
Full Load New and Clean Output at Summer Design Condition -- per Turbine	(MW)	231.1	204.5	168.7
Full Load New and Clean Output at Summer Design Condition-- Plant (3 turbines)	(MW)	693.4	613.5	506.1
Full Load New and Clean Heat Rate at Summer Design Condition	(Btu/kWh HHV)	10,053	9,972	10,144
Assumed Percentage at Full Load Operation	(%)	85%	85%	85%
Min Load Definition	(MW)	93.0	91.5	93.2
	(% of Full Load)	40%	45%	55%
Min Load New and Clean Heat Rate at Summer Design Condition	(Btu/kWh HHV)	13,432	13,548	12,526
Assumed Percentage at Min Load Operation	(%)	15%	15%	15%
Blended Permitting Heat Rate	(Btu/kWh HHV)	10,560	10,509	10,502
CO2 Fuel Intensity	(lb/MMBtu HHV)	119.5	119.5	119.5
Blended New and Clean CO2 Emission Rate at Summer Conditions	(lb/MWh)	1,262	1,256	1,255
Degradation Margin	(%)	6%	6%	6%
Commercial Margin	(%)	2%	2%	2%
Blended Margined CO2 Emission rate for permitting	(lb/MWh)	1,363	1,356	1,355

SIEMENS

Total Estimated Simple Cycle Startup and Shutdown Emissions and Fuel Use
SGT6-5000F(5)ee ULN on Natural Gas @ 59 °F

Mode	Fuel	Ramp Rate (MW/min)	~ Time (minutes)	Total Pounds per Event								
				NO_X	CO	CO_2	SO_2	SO_3	VOC	UHC	PM	Fuel Use
Total - GT Ignition to 100% GT Load	Gas	13.4	22.3	38.6	482	50,889	0.26	0.03	53.6	107.2	2.8	19,034
Total - 100% GT Load to Fuel Cut Off			17.3	36.5	364	48,679	0.25	0.03	40.2	80.3	2.4	18,143
Total - GT Ignition to 100% GT Load		30	12.7	18.4	280	23,954	0.13	0.02	31.4	62.7	1.4	8,995
Total - 100% GT Load to Fuel Cut Off			7.7	16.3	163	21,743	0.11	0.01	17.9	35.9	1.1	8,104

General Notes

1.) All data is ESTIMATED, NOT guaranteed and is for ONE unit.
2.) Gas fuel must be in compliance with Siemens fuel specifications.
3.) Emissions are at the exhaust stack outlet and exclude ambient air contributions.
4.) Emissions are based on new and clean conditions.
5.) Gas fuel composition is 98% CH_4, 0.6% C_2H_6, 1.4% N_2 and 0.2 gr S/100 scf.
6.) NO_X as NO_2.
7.) VOC consist of total hydrocarbons excluding methane and ethane. VOC and UHC are expressed in terms of methane (CH_4).
8.) Particulates are per US EPA Method 5/202 (front and back half).
9.) Estimated fuel use data is based on a heating value of ~23,140 Btu/lb_m (HHV) and will be different for different heating values.
10.) Please be advised that the information contained in this transmittal has been prepared and is being transmitted per customer request specifically for information purposes only. Data to be included in any permit application or Environmental Impact Statement are strictly the customer's responsibility. Siemens is available to review these documents upon request.

Startup Emissions Notes

1.) Estimated startup (SU) data are from gas turbine (GT) ignition through 100% load.
2.) Estimated SU and shutdown (SD) data are based on the assumed times noted above and will be higher for longer times.
3.) Estimated SU and SD data are based on the ambient temperature noted above and will be higher at lower ambient temperatures.
4.) Total SU time includes 5 minutes from turning gear to synchronization.
5.) SD assumes 100% load to FSNL with no cooldown at FSNL.
6.) Continuous Emissions Monitoring System (CEMS) may calculate emissions differently.
7.) Operator actions do not extend startup or shutdown.
8.) It is assumed that there is no restriction from the interconnected utility for loading the GT from synchronization to 100% load within the SU times considered.

TRPP
Grimes County Peaking Unit
Grimes County, Texas
Simenes Normal Operation Information

SIEMENS

Grimes County
Estimated SGT6-5000F(5ee) Gas Turbine Performance
Gas Turbine in Combined Cycle / Ultra Low NO_x Combustor
SGen6-1000A(104/55) Static / 0.85 Power Factor

Based on 20130130_Grimes_Co_CDS_R2 (0.5 gr S per 100 SCF)
February 1, 2013

SITE CONDITIONS:	CASE 1	CASE 2	CASE 3	CASE 4	CASE 5	CASE 6	CASE 7	CASE 8	CASE 9	CASE 10	CASE 11	CASE 12	CASE 13	CASE 14	CASE 15	CASE 16	CASE 18	CASE 19	CASE 20	CASE 21	CASE 22	CASE 23	CASE 24	CASE 25	CASE 26	CASE 27	CASE 28	CASE 29	CASE 30	CASE 31	CASE 32
FUEL TYPE	Nat. Gas	Nat. Gas	Nat. Gas	Nat. Gas	Nat. Gas	Nat. Gas	Nat. Gas	Nat. Gas	Nat. Gas	Nat. Gas	Nat. Gas	Nat. Gas	Nat. Gas	Nat. Gas	Nat. Gas	Nat. Gas	Nat. Gas	Nat. Gas	Nat. Gas	Nat. Gas	Nat. Gas	Nat. Gas	Nat. Gas	Nat. Gas	Nat. Gas	Nat. Gas	Nat. Gas	Nat. Gas	Nat. Gas	Nat. Gas	Nat. Gas
LOAD LEVEL	Max	75%	Min	Max	75%	Min	Max	75%	Min	Max	75%	Min	Max	75%	Min	Max	75%	Min	BASE	BASE	75%	Min	BASE	BASE	75%	Min	BASE	BASE	75%	Min	BASE
NET FUEL HEATING VALUE, Btu/lb_m (LHV)	20,358	20,358	20,358	20,358	20,358	20,358	20,358	20,358	20,358	20,358	20,358	20,358	20,358	20,358	20,358	20,358	20,358	20,358	20,358	20,358	20,358	20,358	20,358	20,358	20,358	20,358	20,358	20,358	20,358	20,358	20,358
GROSS FUEL HEATING VALUE, Btu/lb_m (HHV)	22,595	22,595	22,595	22,595	22,595	22,595	22,595	22,595	22,595	22,595	22,595	22,595	22,595	22,595	22,595	22,595	22,595	22,595	22,595	22,595	22,595	22,595	22,595	22,595	22,595	22,595	22,595	22,595	22,595	22,595	22,595
AMBIENT DRY BULB TEMPERATURE, °F	7.0	7.0	7.0	29.0	29.0	29.0	40.0	40.0	40.0	56.0	56.0	56.0	69.0	69.0	69.0	69.0	82.0	82.0	82.0	90.0	90.0	90.0	90.0	98.0	98.0	98.0	98.0	109.0	109.0	109.0	109.0
AMBIENT WET BULB TEMPERATURE, °F	5.0	5.0	5.0	24.0	24.0	24.0	37.0	37.0	37.0	51.0	51.0	51.0	63.0	63.0	63.0	63.0	75.0	75.0	75.0	80.0	80.0	80.0	80.0	78.0	78.0	78.0	78.0	76.0	76.0	76.0	76.0
AMBIENT RELATIVE HUMIDITY, %	53	53	53	46	46	46	76	76	76	72	72	72	72	72	72	72	73	73	73	65	65	65	65	42	42	42	42	22	22	22	22
AMBIENT PRESSURE, psia	14.511	14.511	14.511	14.511	14.511	14.511	14.511	14.511	14.511	14.511	14.511	14.511	14.511	14.511	14.511	14.511	14.511	14.511	14.511	14.511	14.511	14.511	14.511	14.511	14.511	14.511	14.511	14.511	14.511	14.511	14.511
COMPRESSOR INLET TEMPERATURE, °F	7.0	7.0	7.0	29.0	29.0	29.0	40.0	40.0	40.0	56.0	56.0	56.0	69.0	69.0	69.0	63.6	82.0	82.0	75.7	90.0	90.0	90.0	81.0	98.0	98.0	98.0	80.0	109.0	109.0	109.0	79.3
EVAPORATIVE COOLER STATUS / EFFECTIVENESS, %	OFF	OFF	OFF	OFF	OFF	OFF	OFF	OFF	OFF	OFF	OFF	OFF	OFF	OFF	OFF	90	OFF	OFF	90	OFF	OFF	OFF	90	OFF	OFF	OFF	90	OFF	OFF	OFF	90
INLET PRESSURE LOSS, in. H_2O (Total)	3.4	2.6	1.5	3.7	2.7	1.6	3.8	2.7	1.6	4.1	2.8	1.6	4.5	2.9	1.6	4.3	2.8	1.7	4.5	4.2	2.7	1.7	4.4	4.1	2.6	1.7	4.4	3.9	2.6	1.7	4.4
EXHAUST PRESSURE LOSS, in. H_2O (Total)	10.9	8.2	4.8	11.2	8.2	4.8	11.3	8.2	4.8	11.7	8.3	4.8	12.4	8.3	4.7	12.0	7.9	4.7	12.2	11.3	7.6	4.7	11.8	10.8	7.4	4.7	11.9	10.2	7.0	4.8	11.9
EXHAUST PRESSURE LOSS, in. H_2O (Static)	5.1	3.8	2.3	5.2	3.8	2.3	5.2	3.8	2.2	5.3	3.8	2.2	5.6	3.8	2.2	5.4	3.6	2.2	5.5	5.0	3.5	2.2	5.3	4.8	3.4	2.2	5.3	4.6	3.2	2.2	5.4
GAS TURBINE PERFORMANCE:																															
GROSS POWER OUTPUT, kW	231,183	173,072	93,000	231,162	173,072	93,000	231,167	173,072	93,000	231,176	173,072	93,000	231,146	173,072	93,000	231,186	164,181	93,000	225,036	211,649	158,389	93,000	220,453	203,538	152,292	93,000	221,311	191,721	143,410	93,000	221,876
GROSS EFFICIENCY, % (LHV)	38.70	35.42	27.97	38.60	35.45	28.09	38.59	35.44	28.13	38.30	35.38	28.18	37.65	35.27	28.19	38.02	34.85	28.17	37.36	36.94	34.40	28.15	37.21	36.64	33.99	28.17	37.25	36.03	33.32	28.18	37.28
GROSS HEAT RATE, Btu/kWh (LHV)	8,810	9,627	12,193	8,834	9,619	12,140	8,836	9,623	12,121	8,902	9,639	12,102	9,058	9,668	12,096	8,968	9,785	12,106	9,126	9,231	9,912	12,115	9,163	9,308	10,033	12,106	9,154	9,464	10,234	12,102	9,147
GROSS HEAT RATE, Btu/kWh (HHV)	9,778	10,685	13,533	9,805	10,676	13,474	9,807	10,680	13,453	9,881	10,698	13,432	10,053	10,730	13,425	9,954	10,861	13,436	10,129	10,245	11,001	13,447	10,170	10,331	11,135	13,437	10,160	10,504	11,359	13,432	10,152
FUEL FLOW, lb_m/hr	100,047	81,844	55,702	100,314	81,776	55,458	100,332	81,809	55,371	101,095	81,944	55,285	102,846	82,192	55,258	101,843	78,918	55,303	100,884	95,970	77,117	55,346	99,225	93,059	75,053	55,305	99,511	89,128	72,094	55,284	99,688
HEAT INPUT, MMBtu/hr (LHV)	2,037	1,666	1,134	2,042	1,665	1,129	2,043	1,665	1,127	2,058	1,668	1,125	2,094	1,673	1,125	2,073	1,607	1,126	2,054	1,954	1,570	1,127	2,020	1,894	1,528	1,126	2,026	1,814	1,468	1,125	2,029
HEAT INPUT, MMBtu/hr (HHV)	2,261	1,849	1,259	2,267	1,848	1,253	2,267	1,848	1,251	2,284	1,852	1,249	2,324	1,857	1,249	2,301	1,783	1,250	2,279	2,168	1,742	1,251	2,242	2,103	1,696	1,250	2,248	2,014	1,629	1,249	2,252
EXHAUST TEMPERATURE, °F	1,094	1,094	1,094	1,099	1,109	1,109	1,099	1,116	1,116	1,101	1,131	1,131	1,103	1,144	1,144	1,104	1,158	1,158	1,110	1,119	1,167	1,167	1,114	1,124	1,173	1,173	1,113	1,134	1,181	1,181	1,112
EXHAUST FLOW, lb_m/hr	4,180,601	3,603,102	2,752,231	4,244,691	3,604,518	2,739,599	4,272,126	3,603,609	2,734,021	4,360,948	3,592,197	2,714,084	4,502,328	3,583,415	2,695,315	4,404,739	3,469,427	2,676,113	4,436,831	4,252,828	3,398,113	2,665,862	4,360,546	4,164,423	3,340,532	2,671,131	4,379,379	4,038,582	3,257,466	2,681,169	4,394,213
EXHAUST GAS COMPOSITION (% BY VOLUME):																															
OXYGEN	12.10	12.54	13.43	12.18	12.52	13.41	12.17	12.45	13.33	12.20	12.33	13.21	12.21	12.17	13.05	12.08	12.01	12.82	11.98	12.01	11.96	12.71	11.89	12.19	12.14	12.83	11.94	12.40	12.38	12.98	12.00
CARBON DIOXIDE	4.10	3.90	3.49	4.05	3.90	3.49	4.02	3.89	3.48	3.96	3.90	3.50	3.90	3.92	3.51	3.94	3.90	3.53	3.89	3.86	3.88	3.54	3.89	3.83	3.86	3.53	3.89	3.80	3.81	3.53	3.88
WATER	8.03	7.63	6.83	8.07	7.76	6.97	8.39	8.14	7.34	8.72	8.60	7.81	9.22	9.26	8.48	9.49	10.16	9.44	10.36	10.50	10.54	9.87	10.86	9.88	9.93	9.31	10.60	9.16	9.19	8.65	10.35
NITROGEN	74.87	75.03	75.35	74.80	74.92	75.24	74.53	74.63	74.94	74.23	74.28	74.58	73.79	73.77	74.08	73.61	73.06	73.34	72.89	72.76	72.75	73.01	72.50	73.22	73.20	73.45	72.70	73.76	73.75	73.96	72.89
ARGON	0.90	0.90	0.90	0.89	0.90	0.90	0.89	0.89	0.90	0.89	0.89	0.89	0.88	0.88	0.89	0.88	0.87	0.88	0.87	0.87	0.87	0.87	0.87	0.88	0.88	0.88	0.87	0.88	0.88	0.88	0.87
MOLECULAR WEIGHT	28.46	28.48	28.53	28.45	28.47	28.52	28.41	28.43	28.47	28.37	28.38	28.42	28.31	28.30	28.35	28.28	28.20	28.25	28.18	28.16	28.16	28.20	28.13	28.23	28.23	28.26	28.15	28.30	28.30	28.34	28.18
NET EMISSIONS (Based on USEPA test methods):																															
NO_x, ppmvd @ 15% O_2	9	9	9	9	9	9	9	9	9	9	9	9	9	9	9	9	9	9	9	9	9	9	9	9	9	9	9	9	9	9	9
NO_x, lb_m/hr as NO_2	75.7	61.9	42.1	75.8	61.8	41.9	75.9	61.9	41.9	76.4	62.0	41.8	77.7	62.2	41.8	77.0	60.2	41.8	76.9	73.1	58.8	41.9	75.6	70.9	57.2	41.8	75.8	67.9	54.9	41.8	75.9
CO, ppmvd @ 15% O_2	4	4	9	4	4	9	4	4	9	4	4	9	4	4	9	4	4	9	4	4	4	9	4	4	4	9	4	4	4	9	4
CO, lb_m/hr	20.5	16.7	25.6	20.5	16.7	25.5	20.5	16.7	25.5	20.7	16.8	25.4	21.0	16.8	25.4	20.8	16.3	25.5	20.8	19.8	15.9	25.5	20.5	19.2	15.5	25.5	20.5	18.4	14.9	25.5	20.5
VOC, ppmvd @ 15% O_2	1	1	1	1	1	1	1	1	1	1	1	1	1	1	1	1	1	1	1	1	1	1	1	1	1	1	1	1	1	1	1
VOC, lb_m/hr as CH_4	2.9	2.4	1.6	2.9	2.4	1.6	2.9	2.4	1.6	3.0	2.4	1.6	3.0	2.4	1.6	3.0	2.3	1.6	3.0	2.8	2.3	1.6	2.9	2.7	2.2	1.6	2.9	2.6	2.1	1.6	2.9
UHC, ppmvd @ 15% O_2	2	2	2	2	2	2	2	2	2	2	2	2	2	2	2	2	2	2	2	2	2	2	2	2	2	2	2	2	2	2	2
UHC, lb_m/hr as CH_4	5.9	4.8	3.3	5.9	4.8	3.2	5.9	4.8	3.2	5.9	4.8	3.2	6.0	4.8	3.2	6.0	4.7	3.2	6.0	5.7	4.6	3.2	5.9	5.5	4.4	3.2	5.9	5.3	4.3	3.2	5.9
SO_2, lb_m/hr	3.4	2.7	1.9	3.4	2.7	1.9	3.4	2.7	1.9	3.4	2.7	1.9	3.4	2.8	1.9	3.4	2.6	1.9	3.4	3.2	2.6	1.9	3.3	3.1	2.5	1.9	3.3	3.0	2.4	1.9	3.3
SO_3, lb_m/hr	0.4	0.3	0.2	0.4	0.3	0.2	0.4	0.3	0.2	0.4	0.3	0.2	0.4	0.3	0.2	0.4	0.3	0.2	0.4	0.4	0.3	0.2	0.4	0.4	0.3	0.2	0.4	0.4	0.3	0.2	0.4
H_2SO_4, lb_m/hr	0.6	0.5	0.3	0.6	0.5	0.3	0.6	0.5	0.3	0.6	0.5	0.3	0.6	0.5	0.3	0.6	0.4	0.3	0.6	0.5	0.4	0.3	0.5	0.5	0.4	0.3	0.5	0.5	0.4	0.3	0.6
PARTICULATES, lb_m/hr	8.7	8.0	8.0	8.9	8.0	8.0	8.9	8.0	8.0	9.1	8.0	8.0	9.3	8.0	8.0	9.1	8.0	8.0	9.1	8.7	8.0	8.0	8.9	8.6	8.0	8.0	9.0	8.4	8.0	8.0	9.0

NOTES:

- ► Performance is based on new and clean condition. All data is estimated and not guaranteed.
- ► Gross power output is at the generator terminals, minus excitation losses. It does not include SGT-PAC™ auxiliary load losses.
- ► Estimated GT Performance values are dependent upon receiving test tolerances equal to measurement uncertainty calculated in accordance with ASME PTC 19.1-2005.
- ► IGV schedule may be adjusted during commissioning. Part load performance will be adjusted accordingly.
- ► Maximum coupling power is 235,000 kW. Maximum exhaust temperature is 1,200°F for base load and part load.
- ► Fuel gas composition, by moles, is: 96.194% CH_4, 1.317% C_2H_6, 0.222% C_3H_8, 0.062% i-C_4H_{10}, 0.051% n-C_4H_{10}, 0.028% i-C_5H_{12}, 0.013% n-C_5H_{12}, 0.013% n-C_7H_{16}, 0.006% n-C_8H_{18}, 0.326% N_2, 1.767% CO_2, and 0.5 grains Sulfur per 100 SCF.
- ► Gas fuel must be in compliance with the SIEMENS Gas Fuel Spec (ZDX555-DC01-MBP-2500-01).
- ► Average temperature of the gas fuel is 60°F. Sensible Heat of the fuel is not included in the calculated Heat Input values.
- ► VOC emissions consist of total hydrocarbons excluding methane and ethane and are expressed in terms of methane.
- ► Particulates are per US EPA Method 5/202 (front and back half).
- ► Performance is based on fast start option.
- ► The anti-icing system may be in operation at cold ambient in order to maintain emission compliance. The performance data are provided WITHOUT considering the anti-icing system in operation.
- ► With any anti-icing system in operation, GT output and efficiency will be lower than what is shown.
- ► Low Load CO (LLCO) Hardware is in operation for Minimum Load cases.
- ► Emissions exclude ambient air contributions and are for steady-state conditions.
- ► Please be advised that the information contained in this transmittal has been prepared and is being transmitted per customer request specifically for information purposes only.
  Data included in any permit application or Environmental Impact Statement are strictly the customer's responsibility. Siemens is available to review permit application data upon request.

SIZE	DWG NO	SH	REV
A	329A5370	1	I

THIRD ANGLE PROJECTION

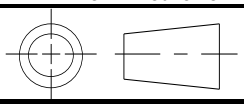

REV STATUS OF SHEETS

SH	REV	SH	REV
1	I		
2	I		
3	I		

REVISIONS

REV	DESCRIPTION	DATE	APPROVED
A	Startup Emissions Included	09/07/17	DRT
	Updated GT Cycle		JCT
B	Added Fuel Burn, MW*hrs, Shutdown	09/11/06	DRT
	Updated Tex to HRSG		JCT
C	Updated with Mode6.2 Emissions	10/06/10	DRT
			JCT
D	Updated with 7FA05_0910 GTP Performance	11/01/07	DRT
E	Updated with 7FA05_0810 GTP Performance	08/31/2011	DRT
	Updated with Mode 6.3R,6.3L, and Mode3 accel Emissions		
F	Notes Update, Accel UHC Update	09/23/2011	DRT
G	Emissions Updated per TG5B	3/15/2012	DRT
H	Accel/Decel emissions update	4/27/2012	DRT
	Renamed from Traditional to Conventional Start		
I	Updated Emissions from Factory Test (TS7)	5/2/2013	AJF

Notes:
1. Approved for External use
2. These estimates are for reference only and are not guaranteed.
3. Reference: EED GTT-7FA.05-1011
4. This start profile does not account for BOP /ST driven delays, such as Steam Temperature Matching or fuel heating
5. Fuel: 100% Methane (LHV = 21515 BTU/lbm)
6. Values contained within reflect 99 percentile of fleet projections
7. Blank
8. If emissions commitments are being made, appropriate margin should be added to reflect plant operational variation and measurement uncertainty
9. These projections reflect emissions at the GT exit
10. VOC defined as Non-methane organic compound, and is assumed as 0.2x of UHC. Conversion from VOC concentration to lbm/event assumes molecular weight of 16.

© COPYRIGHT 2012 GENERAL ELECTRIC COMPANY
PROPRIETARY INFORMATION - THIS DOCUMENT CONTAINS PROPRIETARY INFORMATION OF GENERAL ELECTRIC COMPANY AND MAY NOT BE USED OR DISCLOSED TO OTHERS, EXCEPT WITH THE WRITTEN PERMISSION OF GENERAL ELECTRIC COMPANY.

ITEM	DESCRIPTION	DWG. NO.
LIST OF COMPLEMENTARY DOCUMENTS		

UNLESS OTHERWISE SPECIFIED	SIGNATURES	DATE
DIMENSIONS ARE IN INCHES TOLERANCES ON:	DRAWN Daniel R Tegel	09/06/25
2 PL DECIMALS ±	CHECKED Jason Terry	09/06/25
3 PL DECIMALS ±	ENGRG Daniel R Tegel	09/06/25
ANGLES ±	ISSUED Michael E. Wyatt	09/06/29
FRACTIONS ± ✓	QA	
APPLIED PRACTICES		
	SIM TO: NONE	

GENERAL ELECTRIC COMPANY
g GE ENERGY
GREENVILLE, SC

7FA.05 Simple/Combined Cycle – Gas – GT Conventional Start

FIRST MADE FOR: ML- GN0018 ML

SIZE	CAGE CODE	DWG NO
A		329A5370

SCALE | SHEET 1

DT - 1N

SIZE	DWG NO	SH	REV
A	329A5370	2	I

7FA.05 Simple/Combined Cycle - Gas - GT Conventional Start
12.5%/min accel rate / 17.8MW/min load rate (nominal)

-20F Ambient Temp	Mol Weight	Units	TG to FSNL	TG to 50% BL	TG to 100% BL
NOx	46.01	lbm/event	7.5	27	34
CO	28.01	lbm/event	67	194	198
UHC	16.04	lbm/event	40	74	75
VOC	16.04	lbm/event	8.1	15	15
Fuel Flow	--	MMBTU/event	30	123	292
Output	--	MW*hrs	0	5.9	23
20F Ambient Temp	**Mol Weight**	**Units**	**TG to FSNL**	**TG to 50% BL**	**TG to 100% BL**
NOx	46.01	lbm/event	8.0	23	29
CO	28.01	lbm/event	66	158	161
UHC	16.04	lbm/event	38	61	63
VOC	16.04	lbm/event	7.6	12	13
Fuel Flow	--	MMBTU/event	29	124	293
Output	--	MW*hrs	0	6.1	24
59F Ambient Temp	**Mol Weight**	**Units**	**TG to FSNL**	**TG to 50% BL**	**TG to 100% BL**
NOx	46.01	lbm/event	8.4	22	28
CO	28.01	lbm/event	65	140	143
UHC	16.04	lbm/event	35	52	53
VOC	16.04	lbm/event	7.1	10	11
Fuel Flow	--	MMBTU/event	27	113	265
Output	--	MW*hrs	0	5.5	22
100F Ambient Temp	**Mol Weight**	**Units**	**TG to FSNL**	**TG to 50% BL**	**TG to 100% BL**
NOx	46.01	lbm/event	8.4	20	24
CO	28.01	lbm/event	63	108	110
UHC	16.04	lbm/event	33	45	46
VOC	16.04	lbm/event	6.7	9	9
Fuel Flow	--	MMBTU/event	26	98	222
Output	--	MW*hrs	0	4.3	17
120F Ambient Temp	**Mol Weight**	**Units**	**TG to FSNL**	**TG to 50% BL**	**TG to 100% BL**
NOx	46.01	lbm/event	8.5	20	24
CO	28.01	lbm/event	63	99	101
UHC	16.04	lbm/event	32	43	44
VOC	16.04	lbm/event	6.5	9	9
Fuel Flow	--	MMBTU/event	24	88	196
Output	--	MW*hrs	0	3.6	14

TG = Turning Gear
FSNL = Full Speed No Load
BL = Baseload
Mol Weight = Assumed Molecular Weight
TG-FSNL does not include duration at FSNL

© COPYRIGHT 2012 GENERAL ELECTRIC COMPANY
PROPRIETARY INFORMATION - THIS DOCUMENT CONTAINS PROPRIETARY INFORMATION OF GENERAL ELECTRIC COMPANY AND MAY NOT BE USED OR DISCLOSED TO OTHERS, EXCEPT WITH THE WRITTEN PERMISSION OF GENERAL ELECTRIC COMPANY.

GE ENERGY	GENERAL ELECTRIC COMPANY GREENVILLE, SC	SIZE A	CAGE CODE	DWG NO 329A5370
DRAWN	Daniel R Tegel			
ISSUED	Michael E. Wyatt	SCALE		SHEET 2

7FA.04 Emissions Startup Summary

Traditional Startup Estimated Emissions				
		TG to FSNL	TG to 50%	TG to 100%
NOx	lb/event	4.3	19	24
CO	lb/event	49	178	183
UHC	lb/event	9.7	55	56
VOC	lb/event	4.0	13	13
Fuel	MMBtu/event	20	95	246
Output	MWh	0.0	5.2	21

*Ambient conditions for above are sea level, 59F/60%RH
Lightoff to FSNL mass (NOx, CO and UHC) from Combustion Quoting Limits dated Nov-12

IPS- Project 1 : - 7FA.04-1112 1 Version Code- 4.2.3c/347/7FA.04-1112

SIZE	DWG NO	SH	REV
A	329A5375	1	I

THIRD ANGLE PROJECTION

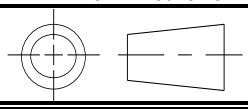

REV STATUS OF SHEETS

SH	REV	SH	REV
1	I		
2	I		
3	I		

REVISIONS

REV	DESCRIPTION	DATE	APPROVED
--	Original issue	09/11/06	DRT JCT
A	Updated with Mode6.2 Emissions	10/06/10	DRT JCT
B	Updated with 7FA05-0910 GTP Performance	11/01/06	DRT
C	Updated with 7FA05_0811 GTP performance Updated with Mode6.3R, 6.L, and Mode3 accel emissions	08/31/2011	DRT
D	Notes Update, Accel UHC update	09/23/2011	DRT
E	Emissions Updated per TG5B	03/15/2012	DRT
F	Accel/Decel Emissions Update Renamed from Traditional to Conventional Shutdown	04/27/2012	DRT
G,H	Not Used		
I	Updated Emissions from Factory Test (TS7)	05/03/2013	AJF

Notes:
1. Approved for External use
2. These estimates are for reference only and are not guaranteed,
3. Reference: EED GTT-7FA.05-1011
4. This shutdown profile does not account for BOP/ST driven delays such as Steam temperature matching or fuel heating
5. Fuel: 100% Methane (LHV = 21515 BTU/lbm)
6. Values contained within reflect 99 percentile of fleet projections
7. Blank
8. If emissions commitments are being made, appropriate margin should be added to reflect plant operational variation and measurement uncertainty
9. These projections reflect emissions at the GT exit
10. VOC defined as Non-methane organic compound, and is assumed as 0.2x of UHC. Conversion from VOC concentration to lbm/event assumes molecular weight of 16.

© COPYRIGHT 2012 GENERAL ELECTRIC COMPANY
PROPRIETARY INFORMATION - THIS DOCUMENT CONTAINS PROPRIETARY INFORMATION OF GENERAL ELECTRIC COMPANY AND MAY NOT BE USED OR DISCLOSED TO OTHERS, EXCEPT WITH THE WRITTEN PERMISSION OF GENERAL ELECTRIC COMPANY.

ITEM	DESCRIPTION	DWG. NO.

LIST OF COMPLEMENTARY DOCUMENTS

UNLESS OTHERWISE SPECIFIED	SIGNATURES	DATE
DIMENSIONS ARE IN INCHES TOLERANCES ON:	DRAWN Daniel R Tegel	09/11/06
2 PL DECIMALS ±	CHECKED Jason Terry	09/11/06
3 PL DECIMALS ±	ENGRG Daniel R Tegel	09/11/06
ANGLES ±	ISSUED Dennis J. Varga	09/11/06
FRACTIONS ± ✓	QA	
APPLIED PRACTICES		
	SIM TO: NONE	

GENERAL ELECTRIC COMPANY
g GE ENERGY
GREENVILLE, SC

7FA.05 Simple/Combined Cycle – Gas –
GT Conventional Shutdown

FIRST MADE FOR: ML- GN0018 ML

SIZE	CAGE CODE	DWG NO
A		329A5375

SCALE | SHEET 1

DT - 1N

SIZE	DWG NO	SH	REV
A	329A5375	2	I

7FA.05 Simple/Combined Cycle - Gas - GT Conventional Shutdown
12.5%/min decel rate / 17.8MW/min unload rate (nominal)

-20F Ambient Temp	Mol Weight	Units	FSNL to TG	50% BL to TG	100% BL to TG
NOx	46.01	lbm/event	4.1	21	28
CO	28.01	lbm/event	81	189	193
UHC	16.04	lbm/event	64	96	97
VOC	16.04	lbm/event	13	19	19
Fuel Flow	--	MMBTU/event	12	98	267
Output	--	MW*hrs	0	5.9	23
20F Ambient Temp	**Mol Weight**	**Units**	**FSNL to TG**	**50% BL to TG**	**100% BL to TG**
NOx	46.01	lbm/event	4.2	17	23
CO	28.01	lbm/event	83	164	167
UHC	16.04	lbm/event	66	89	90
VOC	16.04	lbm/event	13	18	18
Fuel Flow	--	MMBTU/event	12	100	269
Output	--	MW*hrs	0	6.1	24
59F Ambient Temp	**Mol Weight**	**Units**	**FSNL to TG**	**50% BL to TG**	**100% BL to TG**
NOx	46.01	lbm/event	4.2	16	21
CO	28.01	lbm/event	84	148	151
UHC	16.04	lbm/event	68	83	84
VOC	16.04	lbm/event	14	17	17
Fuel Flow	--	MMBTU/event	12	91	243
Output	--	MW*hrs	0	5.5	22
100F Ambient Temp	**Mol Weight**	**Units**	**FSNL to TG**	**50% BL to TG**	**100% BL to TG**
NOx	46.01	lbm/event	4.2	14	18
CO	28.01	lbm/event	84	122	124
UHC	16.04	lbm/event	67	77	78
VOC	16.04	lbm/event	13	15	16
Fuel Flow	--	MMBTU/event	12	78	203
Output	--	MW*hrs	0	4.3	17
120F Ambient Temp	**Mol Weight**	**Units**	**FSNL to TG**	**50% BL to TG**	**100% BL to TG**
NOx	46.01	lbm/event	4.2	14	17
CO	28.01	lbm/event	84	115	117
UHC	16.04	lbm/event	66	76	77
VOC	16.04	lbm/event	13	15	15
Fuel Flow	--	MMBTU/event	12	70	177
Output	--	MW*hrs	0	3.6	14

TG = Turning Gear
FSNL = Full Speed No Load
BL = Baseload
Mol Weight = Assumed Molecular Weight
FSNL-TG does not include duration at FSNL

© COPYRIGHT 2012 GENERAL ELECTRIC COMPANY
PROPRIETARY INFORMATION - THIS DOCUMENT CONTAINS PROPRIETARY INFORMATION OF GENERAL ELECTRIC COMPANY AND MAY NOT BE USED OR DISCLOSED TO OTHERS, EXCEPT WITH THE WRITTEN PERMISSION OF GENERAL ELECTRIC COMPANY.

GE ENERGY	GENERAL ELECTRIC COMPANY GREENVILLE, SC	SIZE A	CAGE CODE	DWG NO 329A5375
DRAWN	Daniel R Tegel			
ISSUED	Dennis J. Varga	SCALE		SHEET 2

7FA.04 Emissions Shutdown Summary

Traditional Shutdown Estimated Emissions				
		FSNL to TG	50% to TG	100% to TG
NOx	lb/event	4	19	24
CO	lb/event	63	192	197
UHC	lb/event	20	65	67
VOC	lb/event	8	17	17
Fuel	MMBtu/event	10	85	236
Output	MWh	0.0	5.2	21

*Ambient conditions for above are sea level, 59F/60%RH
FSNL to TG mass estimated from 7FA.05 Curves

IPS- Project 1 : - 7FA.04-1112 1 Version Code- 4.2.3c/347/7FA.04-1112

TRPP
Grimes County Peaking Unit
Grimes County, Texas
GE 7FA.05 Performance Information

Tenaska - Grimes County
ESTIMATED PERFORMANCE - 7FA.05

Load Condition		BASE	75.0%	48.4%	BASE	75.0%	45.5%	BASE	75.0%	45.2%	BASE	75.0%	45.8%	BASE	BASE	75.0%	46.2%	BASE	BASE	75.0%	46.7%	BASE	BASE	75.0%	47.3%	BASE	BASE	75.0%	47.9%	BASE	BASE	75.0%	49.3%
Ambient Temperature	°F	7.0	7.0	7.0	29.0	29.0	29.0	40.0	40.0	40.0	56.0	56.0	56.0	69.0	69.0	69.0	69.0	82.0	82.0	82.0	82.0	90.0	90.0	90.0	90.0	98.0	98.0	98.0	98.0	109.0	109.0	109.0	109.0
Ambient Relative Humidity	%	50.0	50.0	50.0	44.6	44.6	44.6	75.6	75.6	75.6	71.2	71.2	71.2	72.1	72.1	72.1	72.1	72.6	72.6	72.6	72.6	65.1	65.1	65.1	65.1	41.5	41.5	41.5	41.5	22.0	22.0	22.0	22.0
Evap. Cooler Status		Off	Off	Off	Off	Off	Off	Off	Off	Off	Off	Off	Off	On	Off	Off	Off	On	Off	Off	Off	On	Off	Off	Off	On	Off	Off	Off	On	Off	Off	Off
Evap. Cooler Effectiveness														85%				85%				85%				85%				85%			
Fuel Type		Cust Gas	Cust Gas	Cust Gas	Cust Gas	Cust Gas	Cust Gas	Cust Gas	Cust Gas	Cust Gas	Cust Gas	Cust Gas	Cust Gas	Cust Gas	Cust Gas	Cust Gas	Cust Gas	Cust Gas	Cust Gas	Cust Gas	Cust Gas	Cust Gas	Cust Gas	Cust Gas	Cust Gas	Cust Gas	Cust Gas	Cust Gas	Cust Gas	Cust Gas	Cust Gas	Cust Gas	Cust Gas
Fuel LHV	BTU/lb	20,349	20,349	20,349	20,349	20,349	20,349	20,349	20,349	20,349	20,349	20,349	20,349	20,349	20,349	20,349	20,349	20,349	20,349	20,349	20,349	20,349	20,349	20,349	20,349	20,349	20,349	20,349	20,349	20,349	20,349	20,349	20,349
Output	kW	227,600	170,700	110,200	225,200	168,900	102,500	223,600	167,700	101,100	215,500	161,600	98,700	213,400	212,400	159,300	98,100	208,000	203,600	152,700	95,100	204,200	197,600	148,200	93,500	204,500	191,100	143,300	91,500	204,400	182,200	136,600	89,800
Heat Rate (LHV)	BTU/kWh	8,710	9,370	11,380	8,760	9,280	11,620	8,785	9,230	11,680	8,810	9,345	11,840	8,865	8,900	9,405	11,800	8,950	8,980	9,550	11,980	8,985	9,035	9,660	12,090	8,980	9,085	9,760	12,200	8,975	9,170	9,890	12,310
Heat Cons. (LHV)	MMBTU/hr	1,982.4	1,599.5	1,254.1	1,972.8	1,567.4	1,191.1	1,964.3	1,547.9	1,180.8	1,898.6	1,510.2	1,168.6	1,891.8	1,890.4	1,498.2	1,157.6	1,861.6	1,828.3	1,458.3	1,139.3	1,834.7	1,785.3	1,431.6	1,130.4	1,836.4	1,736.1	1,398.6	1,116.3	1,834.5	1,670.8	1,351.0	1,105.4
Exhaust Flow	x10^3 lb/hr	4,287	3,528	2,778	4,245	3,446	2,640	4,209	3,350	2,642	4,087	3,254	2,657	4,091	4,125	3,211	2,646	4,047	4,001	3,105	2,633	3,992	3,917	3,037	2,632	4,002	3,847	2,973	2,637	4,007	3,753	2,924	2,654
Exhaust Temperature	°F	1,064	1,090	1,189	1,090	1,105	1,215	1,103	1,124	1,215	1,111	1,147	1,215	1,113	1,112	1,163	1,215	1,118	1,121	1,184	1,215	1,123	1,126	1,198	1,215	1,121	1,130	1,212	1,215	1,120	1,136	1,215	1,215
Exhaust MolWt	lb/lbmol	28.48	28.49	28.49	28.46	28.47	28.48	28.42	28.42	28.44	28.38	28.38	28.40	28.29	28.31	28.31	28.33	28.19	28.22	28.20	28.24	28.14	28.17	28.16	28.20	28.17	28.24	28.22	28.26	28.20	28.31	28.30	28.34
Water / Steam Flow	lb/hr																																

EMISSIONS

NOx	ppmvd	9	9	9	9	9	9	9	9	9	9	9	9	9	9	9	9	9	9	9	9	9	9	9	9	9	9	9	9	9	9	9	9
NOx Correction O2 Value	% O2	15	15	15	15	15	15	15	15	15	15	15	15	15	15	15	15	15	15	15	15	15	15	15	15	15	15	15	15	15	15	15	15
NOx as NO2	lb/hr	72	58	45	71	57	43	71	56	43	69	55	42	68	68	54	42	67	66	53	41	66	65	52	41	66	63	51	40	66	60	49	40
CO	ppmvd	9	9	9	9	9	9	9	9	9	9	9	9	9	9	9	9	9	9	9	9	9	9	9	9	9	9	9	9	9	9	9	9
CO	lb/hr	35	29	23	35	28	22	34	27	22	33	26	22	33	33	26	21	32	32	25	21	32	31	24	21	32	31	24	21	32	30	24	22
UHC	ppmvw	7	7	7	7	7	7	7	7	7	7	7	7	7	7	7	7	7	7	7	7	7	7	7	7	7	7	7	7	7	7	7	7
UHC	lb/hr	17	14	11	17	14	10	17	13	10	16	13	10	16	16	13	10	16	16	12	10	16	16	12	10	16	15	12	10	16	15	12	10
VOC	ppmvw	1.4	1.4	1.4	1.4	1.4	1.4	1.4	1.4	1.4	1.4	1.4	1.4	1.4	1.4	1.4	1.4	1.4	1.4	1.4	1.4	1.4	1.4	1.4	1.4	1.4	1.4	1.4	1.4	1.4	1.4	1.4	1.4
VOC	lb/hr	3.4	2.8	2.2	3.3	2.7	2.1	3.3	2.6	2.1	3.2	2.6	2.1	3.2	3.3	2.5	2.1	3.2	3.2	2.5	2.1	3.2	3.1	2.4	2.1	3.2	3.1	2.4	2.1	3.2	3.0	2.3	2.1
SO2	ppmvw	<0.5	<0.5	<0.5	<0.5	<0.5	<0.5	<0.5	<0.5	<0.5	<0.5	<0.5	<0.5	<0.5	<0.5	<0.5	<0.5	<0.5	<0.5	<0.5	<0.5	<0.5	<0.5	<0.5	<0.5	<0.5	<0.5	<0.5	<0.5	<0.5	<0.5	<0.5	<0.5
SO2	lb/hr	0.05	0.04	0.03	0.05	0.04	0.03	0.05	0.04	0.03	0.05	0.04	0.03	0.05	0.05	0.04	0.03	0.05	0.04	0.04	0.03	0.05	0.04	0.04	0.03	0.05	0.04	0.03	0.03	0.05	0.04	0.03	0.03
SO3	ppmvw	<0.5	<0.5	<0.5	<0.5	<0.5	<0.5	<0.5	<0.5	<0.5	<0.5	<0.5	<0.5	<0.5	<0.5	<0.5	<0.5	<0.5	<0.5	<0.5	<0.5	<0.5	<0.5	<0.5	<0.5	<0.5	<0.5	<0.5	<0.5	<0.5	<0.5	<0.5	<0.5
SO3	lb/hr	<0.01	<0.01	<0.01	<0.01	<0.01	<0.01	<0.01	<0.01	<0.01	<0.01	<0.01	<0.01	<0.01	<0.01	<0.01	<0.01	<0.01	<0.01	<0.01	<0.01	<0.01	<0.01	<0.01	<0.01	<0.01	<0.01	<0.01	<0.01	<0.01	<0.01	<0.01	<0.01
Sulfur Mist	lb/hr	<0.01	<0.01	<0.01	<0.01	<0.01	<0.01	<0.01	<0.01	<0.01	<0.01	<0.01	<0.01	<0.01	<0.01	<0.01	<0.01	<0.01	<0.01	<0.01	<0.01	<0.01	<0.01	<0.01	<0.01	<0.01	<0.01	<0.01	<0.01	<0.01	<0.01	<0.01	<0.01
Particulate Basis		US-Totl	US-Totl	US-Totl	US-Totl	US-Totl	US-Totl	US-Totl	US-Totl	US-Totl	US-Totl	US-Totl	US-Totl	US-Totl	US-Totl	US-Totl	US-Totl	US-Totl	US-Totl	US-Totl	US-Totl	US-Totl	US-Totl	US-Totl	US-Totl	US-Totl	US-Totl	US-Totl	US-Totl	US-Totl	US-Totl	US-Totl	US-Totl
Particulate Emissions		9.3	9.3	9.3	9.3	9.3	9.3	9.3	9.3	9.3	9.3	9.3	9.3	9.3	9.3	9.3	9.3	9.3	9.3	9.3	9.3	9.3	9.3	9.3	9.3	9.3	9.3	9.3	9.3	9.3	9.3	9.3	9.3
Particulate Units		lbm/hr	lbm/hr	lbm/hr	lbm/hr	lbm/hr	lbm/hr	lbm/hr	lbm/hr	lbm/hr	lbm/hr	lbm/hr	lbm/hr	lbm/hr	lbm/hr	lbm/hr	lbm/hr	lbm/hr	lbm/hr	lbm/hr	lbm/hr	lbm/hr	lbm/hr	lbm/hr	lbm/hr	lbm/hr	lbm/hr	lbm/hr	lbm/hr	lbm/hr	lbm/hr	lbm/hr	lbm/hr
Fuel Sulfur	ppmw	0.25	0.25	0.25	0.25	0.25	0.25	0.25	0.25	0.25	0.25	0.25	0.25	0.25	0.25	0.25	0.25	0.25	0.25	0.25	0.25	0.25	0.25	0.25	0.25	0.25	0.25	0.25	0.25	0.25	0.25	0.25	0.25

EXHAUST ANALYSIS % VOL.

Argon		0.89	0.89	0.89	0.89	0.89	0.89	0.89	0.89	0.89	0.88	0.88	0.89	0.88	0.88	0.88	0.88	0.87	0.87	0.87	0.87	0.86	0.87	0.87	0.87	0.87	0.87	0.87	0.87	0.87	0.88	0.88	0.88
Nitrogen		75.01	75.07	75.08	74.89	74.95	74.98	74.58	74.61	74.71	74.26	74.26	74.42	73.66	73.82	73.76	73.95	72.94	73.11	73.03	73.26	72.56	72.80	72.71	72.97	72.78	73.26	73.14	73.43	73.01	73.80	73.69	73.98
Oxygen		12.49	12.66	12.69	12.43	12.61	12.68	12.33	12.41	12.68	12.29	12.29	12.73	12.18	12.28	12.14	12.65	12.06	12.15	11.92	12.58	11.97	12.09	11.82	12.56	12.04	12.27	11.93	12.77	12.11	12.49	12.19	13.01
Carbon Dioxide		3.93	3.86	3.84	3.95	3.87	3.83	3.96	3.92	3.80	3.93	3.93	3.73	3.91	3.87	3.94	3.70	3.87	3.85	3.96	3.65	3.86	3.83	3.96	3.62	3.86	3.80	3.96	3.58	3.85	3.77	3.91	3.53
Water		7.67	7.52	7.49	7.84	7.68	7.62	8.24	8.17	7.93	8.63	8.63	8.24	9.38	9.15	9.28	8.82	10.26	10.02	10.23	9.64	10.74	10.40	10.65	9.99	10.46	9.79	10.10	9.35	10.16	9.07	9.34	8.61

SITE CONDITIONS

Elevation	Feet	365	365	365	365	365	365	365	365	365	365	365	365	365	365	365	365	365	365	365	365	365	365	365	365	365	365	365	365	365	365	365	365
Site Pressure	psia	14.5	14.5	14.5	14.5	14.5	14.5	14.5	14.5	14.5	14.5	14.5	14.5	14.5	14.5	14.5	14.5	14.5	14.5	14.5	14.5	14.5	14.5	14.5	14.5	14.5	14.5	14.5	14.5	14.5	14.5	14.5	14.5
Relative Humidity	%	50.0	50.0	50.0	44.6	44.6	44.6	75.6	75.6	75.6	71.2	71.2	71.2	72.1	72.1	72.1	72.1	72.6	72.6	72.6	72.6	65.1	65.1	65.1	65.1	41.5	41.5	41.5	41.5	22.0	22.0	22.0	22.0

Exhaust Loss under Site Conditions are at ISO Conditions. Emission information based on GE recommended measurement methods. NOx emissions are corrected to 15% O2 without heat rate correction and are not corrected to ISO reference condition per 40CFR 60.335(a)(1)(i). NOx levels shown will be controlled by algorithms within the SPEEDTRONIC control system.

Sulfur emissions based on noted "WT%" or "ppmw" noted after Sulfur Content values in the fuel

Particulate Note: US-Total PM Emissions (filterable + condensable) utilize compliance measurements per US-EPA Test Method 5B dated 1990 (filterable) and US-EPA Test Method 202 dated 1991 (condensable) measured at GT exhaust flange.

IPS- Tenaska - Grimes County : - 7FA.05-01A-0312 1 Version Code- 4.2.2b/344/7FA.05-01A-0312
204019625 12/3/2012 4:45:27 PM

General Electric Proprietary Information

TRPP
Grimes County Peaking Unit
Grimes County, Texas
GE 7FA.04 Performance Information

Tenaska - Grimes County
ESTIMATED PERFORMANCE - 7FA.04

Load Condition		BASE	75.0%	64.9%	BASE	75.0%	54.8%	BASE	75.0%	51.6%	BASE	75.0%	50.3%	BASE	BASE	75.0%	51.8%	BASE	BASE	75.0%	55.5%	BASE	BASE	75.0%	57.5%	BASE	BASE	75.0%	59.5%	BASE	BASE	75.0%	63.6%
Ambient Temperature	°F	7.0	7.0	7.0	29.0	29.0	29.0	40.0	40.0	40.0	56.0	56.0	56.0	69.0	69.0	69.0	69.0	82.0	82.0	82.0	82.0	90.0	90.0	90.0	90.0	98.0	98.0	98.0	98.0	109.0	109.0	109.0	109.0
Ambient Relative Humidity	%	50.0	50.0	50.0	44.6	44.6	44.6	75.6	75.6	75.6	71.2	71.2	71.2	72.1	72.1	72.1	72.1	72.6	72.6	72.6	72.6	65.1	65.1	65.1	65.1	41.5	41.5	41.5	41.5	22.0	22.0	22.0	22.0
Evap. Cooler Status		Off	Off	Off	Off	Off	Off	Off	Off	Off	Off	Off	Off	On	Off	Off	Off	On	Off	Off	Off	On	Off	Off	Off	On	Off	Off	Off	On	Off	Off	Off
Evap. Cooler Effectiveness														85%				85%				85%				85%				85%			
Fuel Type		Cust Gas	Cust Gas	Cust Gas	Cust Gas	Cust Gas	Cust Gas	Cust Gas	Cust Gas	Cust Gas	Cust Gas	Cust Gas	Cust Gas	Cust Gas	Cust Gas	Cust Gas	Cust Gas	Cust Gas	Cust Gas	Cust Gas	Cust Gas	Cust Gas	Cust Gas	Cust Gas	Cust Gas	Cust Gas	Cust Gas	Cust Gas	Cust Gas	Cust Gas	Cust Gas	Cust Gas	Cust Gas
Fuel LHV	BTU/lb	20,349	20,349	20,349	20,349	20,349	20,349	20,349	20,349	20,349	20,349	20,349	20,349	20,349	20,349	20,349	20,349	20,349	20,349	20,349	20,349	20,349	20,349	20,349	20,349	20,349	20,349	20,349	20,349	20,349	20,349	20,349	20,349
Output	kW	207,000	155,300	134,300	198,300	148,700	108,700	193,000	144,700	99,600	184,600	138,400	92,800	179,900	176,300	132,200	91,300	172,000	167,900	125,900	93,200	168,400	162,500	121,800	93,400	168,700	156,700	117,500	93,200	168,700	148,400	111,300	94,400
Heat Rate (LHV)	BTU/kWh	8,855	9,310	9,805	8,855	9,400	10,720	8,875	9,475	11,130	8,930	9,605	11,430	8,990	9,020	9,760	11,470	9,090	9,135	9,970	11,340	9,145	9,215	10,110	11,310	9,135	9,290	10,220	11,280	9,130	9,415	10,410	11,180
Heat Cons. (LHV)	MMBTU/hr	1,833.0	1,445.8	1,316.8	1,755.9	1,397.8	1,165.3	1,712.9	1,371.0	1,108.5	1,648.5	1,329.3	1,060.7	1,617.3	1,590.2	1,290.3	1,047.2	1,563.5	1,533.8	1,255.2	1,056.9	1,540.0	1,497.4	1,231.4	1,056.4	1,541.1	1,455.7	1,200.9	1,051.3	1,540.2	1,397.2	1,158.6	1,055.4
Exhaust Flow	x10^3 lb/hr	3,861	3,080	2,810	3,730	2,994	2,515	3,656	2,938	2,449	3,548	2,853	2,373	3,475	3,436	2,767	2,362	3,363	3,317	2,684	2,383	3,310	3,242	2,634	2,389	3,318	3,180	2,610	2,400	3,323	3,090	2,574	2,428
Exhaust Temperature	°F	1,099	1,119	1,149	1,108	1,138	1,204	1,112	1,149	1,205	1,119	1,166	1,215	1,127	1,130	1,183	1,215	1,138	1,142	1,203	1,215	1,144	1,150	1,215	1,215	1,143	1,156	1,215	1,215	1,142	1,165	1,215	1,215
Exhaust MolWt	lb/lbmol	28.47	28.47	28.47	28.46	28.46	28.46	28.42	28.42	28.43	28.38	28.37	28.39	28.29	28.31	28.31	28.33	28.19	28.21	28.20	28.23	28.13	28.17	28.16	28.19	28.16	28.23	28.23	28.25	28.19	28.31	28.31	28.32
Water / Steam Flow	lb/hr																																

EMISSIONS

NOx	ppmvd	9	9	9	9	9	9	9	9	9	9	9	9	9	9	9	9	9	9	9	9	9	9	9	9	9	9	9	9	9	9	9	9
NOx Correction O2 Value	% O2	15	15	15	15	15	15	15	15	15	15	15	15	15	15	15	15	15	15	15	15	15	15	15	15	15	15	15	15	15	15	15	15
NOx as NO2	lb/hr	66	52	48	64	51	42	62	50	40	60	48	38	59	58	47	38	57	56	45	38	56	54	45	38	56	53	43	38	56	51	42	38
CO	ppmvd	9	9	9	9	9	9	9	9	9	9	9	9	9	9	9	10	9	9	9	10	9	9	9	10	9	9	9	9	9	9	9	9
CO	lb/hr	31	25	23	30	24	21	30	24	20	29	23	19	28	28	22	21	27	27	22	21	26	26	21	21	27	26	21	19	27	25	21	20
UHC	ppmvw	7	7	7	7	7	7	7	7	7	7	7	7	7	7	7	7	7	7	7	7	7	7	7	7	7	7	7	7	7	7	7	7
UHC	lb/hr	15	12	11	15	12	10	14	12	10	14	11	9	14	14	11	9	13	13	11	9	13	13	10	9	13	13	10	10	13	12	10	10
VOC	ppmvw	1.4	1.4	1.4	1.4	1.4	1.4	1.4	1.4	1.4	1.4	1.4	1.4	1.4	1.4	1.4	1.4	1.4	1.4	1.4	1.4	1.4	1.4	1.4	1.4	1.4	1.4	1.4	1.4	1.4	1.4	1.4	1.4
VOC	lb/hr	3.0	2.4	2.2	2.9	2.4	2.0	2.9	2.3	1.9	2.8	2.3	1.9	2.8	2.7	2.2	1.9	2.7	2.6	2.1	1.9	2.6	2.6	2.1	1.9	2.6	2.5	2.1	1.9	2.6	2.4	2.0	1.9
SO2	ppmvw	<0.5	<0.5	<0.5	<0.5	<0.5	<0.5	<0.5	<0.5	<0.5	<0.5	<0.5	<0.5	<0.5	<0.5	<0.5	<0.5	<0.5	<0.5	<0.5	<0.5	<0.5	<0.5	<0.5	<0.5	<0.5	<0.5	<0.5	<0.5	<0.5	<0.5	<0.5	<0.5
SO2	lb/hr	0.05	0.04	0.03	0.04	0.03	0.03	0.04	0.03	0.03	0.04	0.03	0.03	0.04	0.04	0.03	0.03	0.04	0.04	0.03	0.03	0.04	0.04	0.03	0.03	0.04	0.04	0.03	0.03	0.04	0.03	0.03	0.03
SO3	ppmvw	<0.5	<0.5	<0.5	<0.5	<0.5	<0.5	<0.5	<0.5	<0.5	<0.5	<0.5	<0.5	<0.5	<0.5	<0.5	<0.5	<0.5	<0.5	<0.5	<0.5	<0.5	<0.5	<0.5	<0.5	<0.5	<0.5	<0.5	<0.5	<0.5	<0.5	<0.5	<0.5
SO3	lb/hr	<0.01	<0.01	<0.01	<0.01	<0.01	<0.01	<0.01	<0.01	<0.01	<0.01	<0.01	<0.01	<0.01	<0.01	<0.01	<0.01	<0.01	<0.01	<0.01	<0.01	<0.01	<0.01	<0.01	<0.01	<0.01	<0.01	<0.01	<0.01	<0.01	<0.01	<0.01	<0.01
Sulfur Mist	lb/hr	<0.01	<0.01	<0.01	<0.01	<0.01	<0.01	<0.01	<0.01	<0.01	<0.01	<0.01	<0.01	<0.01	<0.01	<0.01	<0.01	<0.01	<0.01	<0.01	<0.01	<0.01	<0.01	<0.01	<0.01	<0.01	<0.01	<0.01	<0.01	<0.01	<0.01	<0.01	<0.01
Particulate Basis		US-Totl	US-Totl	US-Totl	US-Totl	US-Totl	US-Totl	US-Totl	US-Totl	US-Totl	US-Totl	US-Totl	US-Totl	US-Totl	US-Totl	US-Totl	US-Totl	US-Totl	US-Totl	US-Totl	US-Totl	US-Totl	US-Totl	US-Totl	US-Totl	US-Totl	US-Totl	US-Totl	US-Totl	US-Totl	US-Totl	US-Totl	US-Totl
Particulate Emissions		8.2	8.2	8.2	8.2	8.2	8.2	8.2	8.2	8.2	8.2	8.2	8.2	8.2	8.2	8.2	8.2	8.2	8.2	8.2	8.2	8.2	8.2	8.2	8.2	8.2	8.2	8.2	8.2	8.2	8.2	8.2	8.2
Particulate Units		lbm/hr	lbm/hr	lbm/hr	lbm/hr	lbm/hr	lbm/hr	lbm/hr	lbm/hr	lbm/hr	lbm/hr	lbm/hr	lbm/hr	lbm/hr	lbm/hr	lbm/hr	lbm/hr	lbm/hr	lbm/hr	lbm/hr	lbm/hr	lbm/hr	lbm/hr	lbm/hr	lbm/hr	lbm/hr	lbm/hr	lbm/hr	lbm/hr	lbm/hr	lbm/hr	lbm/hr	lbm/hr
Fuel Sulfur	ppmw	0.25	0.25	0.25	0.25	0.25	0.25	0.25	0.25	0.25	0.25	0.25	0.25	0.25	0.25	0.25	0.25	0.25	0.25	0.25	0.25	0.25	0.25	0.25	0.25	0.25	0.25	0.25	0.25	0.25	0.25	0.25	0.25

EXHAUST ANALYSIS % VOL.

Argon		0.89	0.89	0.89	0.89	0.89	0.89	0.89	0.89	0.89	0.88	0.88	0.89	0.88	0.88	0.88	0.88	0.87	0.87	0.87	0.87	0.86	0.87	0.87	0.87	0.87	0.87	0.87	0.87	0.87	0.88	0.88	0.88
Nitrogen		74.93	74.97	74.97	74.85	74.87	74.90	74.57	74.58	74.67	74.26	74.25	74.37	73.64	73.79	73.77	73.91	72.91	73.08	73.04	73.19	72.53	72.76	72.73	72.89	72.75	73.22	73.20	73.34	72.97	73.75	73.77	73.86
Oxygen		12.28	12.37	12.38	12.32	12.39	12.45	12.29	12.32	12.58	12.28	12.26	12.60	12.13	12.20	12.14	12.55	11.96	12.05	11.95	12.38	11.87	11.98	11.88	12.33	11.94	12.16	12.11	12.50	12.01	12.37	12.41	12.69
Carbon Dioxide		4.03	3.99	3.98	4.00	3.97	3.94	3.97	3.96	3.84	3.94	3.95	3.79	3.93	3.91	3.94	3.75	3.91	3.90	3.94	3.74	3.91	3.88	3.93	3.72	3.90	3.86	3.88	3.70	3.90	3.82	3.80	3.68
Water		7.87	7.78	7.77	7.94	7.88	7.82	8.27	8.25	8.02	8.64	8.66	8.36	9.42	9.22	9.27	8.91	10.35	10.11	10.19	9.81	10.83	10.50	10.59	10.19	10.55	9.89	9.94	9.59	10.25	9.17	9.14	8.89

SITE CONDITIONS

Elevation	Feet	365	365	365	365	365	365	365	365	365	365	365	365	365	365	365	365	365	365	365	365	365	365	365	365	365	365	365	365	365	365	365	365
Site Pressure	psia	14.5	14.5	14.5	14.5	14.5	14.5	14.5	14.5	14.5	14.5	14.5	14.5	14.5	14.5	14.5	14.5	14.5	14.5	14.5	14.5	14.5	14.5	14.5	14.5	14.5	14.5	14.5	14.5	14.5	14.5	14.5	14.5
Relative Humidity	%	50.0	50.0	50.0	44.6	44.6	44.6	75.6	75.6	75.6	71.2	71.2	71.2	72.1	72.1	72.1	72.1	72.6	72.6	72.6	72.6	65.1	65.1	65.1	65.1	41.5	41.5	41.5	41.5	22.0	22.0	22.0	22.0

Exhaust Loss under Site Conditions are at ISO Conditions. Emission information based on GE recommended measurement methods. NOx emissions are corrected to 15% O2 without heat rate correction and are not corrected to ISO reference condition per 40CFR 60.335(a)(1)(i). NOx levels shown will be controlled by algorithms within the SPEEDTRONIC control system.

Sulfur emissions based on noted "WT%" or "ppmw" noted after Sulfur Content values in the fuel

Particulate Note: US-Total PM Emissions (filterable + condensable) utilize compliance measurements per US-EPA Test Method 5B dated 1990 (filterable) and US-EPA Test Method 202 dated 1991 (condensable) measured at GT exhaust flange.

IPS- Tenaska : Grimes County - 7FA.04-1112 : Grimes County 5 Version Code- 4.2.2b/344/7FA.04-1112
204019625 12/3/2012 4:32:53 7FA04.gtp

General Electric Proprietary Information

TRPP
Tenaska Roans Prairie Generating Station
Grimes County, Texas
Historical Fuel Data and Statistical Analysis

Gas Day Date	Heating Value	CO_2 Intensity	Total CO_2	CO_2 Cont	O_2 Cont	N_2 Cont	Methane Cont	Ethane Cont	Propane Cont	I Butane Cont	N Butane Cont	I Pentane Cont	N Pentane Cont	Neo Pentane Cont	N Hexane Cont	Heptane Cont	Octane Cont
Stoichiometry (mol CO_2 / Mol component)				1	0	0	1	2	3	4	4	5	5	5	6	7	8
1/1/2012	1,010.7	118.0	4,528.6	75.3412	-	-	4,253.3128	90.5256	23.9712	35.9568	9.9792	10.2080	6.7100	2.4420	-	5.9136	14.2208
1/2/2012	1,015.4	117.9	4,545.8	71.0468	-	-	4,241.5648	131.1024	22.2024	33.6688	9.5744	9.4600	5.7640	2.6840	-	5.5132	13.2352
1/3/2012	1,009.4	117.9	4,518.3	76.1112	-	-	4,263.5252	77.7656	21.0540	33.2640	9.0992	8.9320	5.3900	2.2660	-	6.1292	14.7840
1/4/2012	1,009.3	117.9	4,516.3	75.4820	-	-	4,266.0332	74.8264	20.6580	33.0528	9.0288	8.8220	5.3460	2.3540	-	6.0984	14.6432
1/5/2012	1,009.8	117.9	4,520.8	75.6008	-	-	4,259.1736	83.1688	22.0044	33.8448	9.3632	9.2400	5.6980	2.5520	-	5.9136	14.2208
1/6/2012	1,009.5	118.0	4,524.4	78.9360	-	-	4,252.1160	88.8976	22.7172	34.1616	9.5568	9.1740	5.5220	2.5080	-	6.0984	14.7136
1/7/2012	1,011.6	118.3	4,543.4	78.6016	-	-	4,240.0776	104.1920	26.3208	39.4240	11.0176	10.7360	6.2920	2.9700	-	6.9916	16.8256
1/8/2012	1,011.9	118.3	4,545.1	78.1660	-	-	4,238.6256	106.2248	26.7432	39.8816	11.1408	10.9780	6.4020	2.9700	-	7.0224	16.8960
1/9/2012	1,011.4	118.3	4,541.2	77.7656	-	-	4,238.8808	105.9696	25.7664	38.7552	10.7184	10.4500	6.2040	2.9040	-	6.9916	16.7904
1/10/2012	1,012.2	118.4	4,552.0	80.0272	-	-	4,235.0968	108.7152	27.6276	42.0112	11.7920	11.2420	6.7540	3.1240	-	7.5152	18.0576
1/11/2012	1,008.6	117.9	4,513.0	77.4092	-	-	4,256.2564	84.1192	21.2256	31.0640	8.8528	8.6020	5.0820	2.2440	-	5.3284	12.8480
1/12/2012	1,011.5	118.4	4,546.2	79.5960	-	-	4,242.4184	99.2728	26.3340	41.1312	11.3168	11.1100	6.5340	3.0360	-	7.4844	17.9872
1/13/2012	1,009.4	118.3	4,534.9	84.3612	-	-	4,244.3632	91.7488	24.5256	37.7168	10.8592	10.0760	6.2040	2.7280	-	6.5604	15.8048
1/14/2012	1,008.2	118.4	4,532.4	88.6996	-	-	4,243.0344	89.3464	23.5752	36.8192	10.9648	9.5700	6.0280	2.4420	-	6.4372	15.4880
1/15/2012	1,010.0	118.6	4,547.2	87.3136	-	-	4,237.7280	96.8352	26.1624	41.4656	11.9504	10.8240	6.6660	2.8820	-	7.4536	17.9168
1/16/2012	1,011.9	118.7	4,561.6	84.3832	-	-	4,232.0036	106.9904	27.4164	45.8832	12.1792	11.7700	7.1060	3.4980	-	8.9012	21.4368
1/17/2012	1,012.7	118.8	4,567.3	82.9972	-	-	4,229.6276	111.3552	28.0896	47.6960	12.5488	12.2100	7.3040	3.7620	-	9.3016	22.4224
1/18/2012	1,009.8	118.4	4,538.9	83.4724	-	-	4,243.8440	93.2360	24.0900	39.2304	10.7536	10.1860	6.2040	2.9260	-	7.3304	17.6704
1/19/2012	1,009.9	118.1	4,529.9	78.7204	-	-	4,256.0584	83.2304	22.5060	37.0656	9.9264	9.6140	5.7420	2.7720	-	7.1148	17.1424
1/20/2012	1,009.5	117.9	4,519.2	75.6096	-	-	4,264.3612	76.3488	21.4236	33.9680	9.2400	9.1520	5.6100	2.5300	-	6.1292	14.7840
1/21/2012	1,010.0	118.0	4,526.0	77.4532	-	-	4,249.9116	92.6640	23.5620	34.5488	9.6800	9.5260	5.7420	2.5520	-	5.9752	14.3968
1/22/2012	1,009.8	118.0	4,524.7	77.3784	-	-	4,248.4508	94.3008	22.8624	34.1088	9.3808	9.2620	5.6100	2.4200	-	6.1292	14.7840
1/23/2012	1,009.2	117.9	4,519.0	78.1704	-	-	4,249.1196	92.8840	22.7436	32.0320	9.3280	9.0420	5.2580	2.3100	-	5.2976	12.7776
1/24/2012	1,008.9	118.1	4,523.3	80.8500	-	-	4,249.1856	89.6016	22.4268	33.9680	9.5744	9.0860	5.5220	2.4860	-	6.0368	14.5376
1/25/2012	1,008.1	117.7	4,503.5	74.8660	-	-	4,270.7016	69.7136	18.6120	29.0752	7.9904	7.8760	4.7960	2.1340	-	5.2052	12.5312
1/26/2012	1,009.3	118.0	4,523.2	78.9932	-	-	4,256.8812	81.8576	22.4268	34.7424	9.6976	9.4160	5.7420	2.5520	-	6.1292	14.7488
1/27/2012	1,009.2	118.1	4,524.2	79.3936	-	-	4,257.1672	81.0392	22.2948	35.0944	9.5392	9.3720	5.6540	2.5520	-	6.4680	15.5936
1/28/2012	1,008.5	117.8	4,512.0	77.4312	-	-	4,263.9212	75.2576	20.4336	31.3280	8.7120	8.5140	5.0820	2.3100	-	5.5748	13.4112
1/29/2012	1,006.2	117.6	4,490.9	76.9912	-	-	4,274.4108	61.8728	16.5264	25.4848	7.0224	6.9300	4.0260	1.7820	-	4.6508	11.2288
1/30/2012	1,008.1	117.5	4,497.3	71.8432	-	-	4,275.5372	67.1440	17.4900	27.1920	7.4800	7.2600	4.3120	1.8480	-	5.0512	12.1792
1/31/2012	1,011.4	117.9	4,527.3	72.3712	-	-	4,257.3080	90.1120	23.7336	35.1648	9.9264	9.7680	5.8520	2.5300	-	6.0368	14.5376
2/1/2012	1,011.0	117.9	4,526.0	73.6516	-	-	4,252.4284	94.4504	23.9976	34.3024	9.8736	9.8340	5.6980	2.4420	-	5.6672	13.6224
2/2/2012	1,011.2	117.9	4,526.7	73.3172	-	-	4,247.7644	100.5224	24.8028	33.9504	10.0320	9.8560	5.6980	2.4420	-	5.3592	12.9184
2/3/2012	1,011.4	118.0	4,530.0	73.7968	-	-	4,250.0920	97.1960	25.0140	35.3056	10.2256	9.9660	5.7640	2.5740	-	5.8828	14.1504
2/4/2012	1,012.0	117.8	4,527.3	69.9600	-	-	4,262.4868	86.9880	23.9184	35.3056	10.1024	9.9000	5.9400	2.6180	-	5.8828	14.1504
2/5/2012	1,011.5	117.9	4,526.8	71.4296	-	-	4,262.4736	85.1312	23.4300	35.3936	9.9440	9.7680	5.9400	2.6400	-	6.0676	14.6080
2/6/2012	1,010.8	117.8	4,522.6	72.5340	-	-	4,263.2700	82.4472	22.7304	34.2496	9.6624	9.4820	5.6980	2.5080	-	5.8828	14.1504
2/7/2012	1,010.4	117.9	4,521.4	73.5460	-	-	4,264.2732	79.6928	22.1760	34.1616	9.4512	9.3280	5.5660	2.4640	-	6.0984	14.6784
2/8/2012	1,009.2	117.7	4,511.1	73.5064	-	-	4,269.6852	72.4856	20.1432	31.4160	8.6064	8.4700	5.1700	2.2880	-	5.6672	13.6576
2/9/2012	1,010.1	117.8	4,519.2	73.6868	-	-	4,252.2524	93.9312	22.1100	32.3136	9.0992	8.8000	5.3020	2.3320	-	5.6672	13.6576
2/10/2012	1,009.1	117.7	4,509.5	73.3128	-	-	4,263.0324	81.1976	20.1168	29.9552	8.2896	8.0080	4.7960	2.0900	-	5.4824	13.2352
2/11/2012	1,011.6	118.2	4,538.7	76.7712	-	-	4,252.6044	91.0184	25.8852	38.8432	11.1408	10.7360	6.4900	2.8380	-	6.5604	15.8048
2/12/2012	1,011.1	118.3	4,541.7	80.5596	-	-	4,246.7480	93.9136	26.3472	39.6352	11.4400	10.8680	6.7760	2.9260	-	6.6220	15.9104
2/13/2012	1,011.3	118.1	4,534.5	75.7196	-	-	4,255.9836	87.6832	24.6840	37.8576	10.5776	10.3840	6.3140	2.7280	-	6.6220	15.9104
2/14/2012	1,011.8	118.0	4,534.2	74.0080	-	-	4,248.4816	99.1232	25.2648	36.7136	10.5072	10.2080	6.1380	2.6620	-	6.1908	14.9248
2/15/2012	1,011.9	118.1	4,535.7	74.2412	-	-	4,246.4268	101.7104	25.6476	36.8720	10.5600	10.2960	6.0720	2.7060	-	6.2216	14.9952
2/16/2012	1,012.5	118.4	4,550.7	77.1232	-	-	4,240.8388	104.9400	26.6508	42.0288	11.2816	11.0440	6.6880	3.1460	-	7.9156	19.0432
2/17/2012	1,011.8	118.2	4,540.1	75.9440	-	-	4,247.6588	97.9880	25.2780	38.8432	10.6304	10.2960	6.3360	2.7720	-	7.1456	17.2128
2/18/2012	1,010.7	118.1	4,533.6	77.5368	-	-	4,248.7852	94.5472	24.0372	37.0304	10.1376	9.8780	6.1380	2.7500	-	6.6836	16.1216
2/19/2012	1,010.9	118.1	4,532.7	76.5864	-	-	4,244.9352	100.4432	24.3804	36.0976	9.9616	9.6800	6.0060	2.6840	-	6.4372	15.5232
2/20/2012	1,011.2	118.1	4,534.7	76.3620	-	-	4,245.4500	99.9504	24.7368	36.8368	10.0848	9.9440	6.1600	2.6620	-	6.6220	15.9104
2/21/2012	1,011.4	118.1	4,535.0	75.5964	-	-	4,246.5984	99.8008	24.8160	36.8016	10.1376	9.8780	6.1160	2.6400	-	6.6220	15.9456
2/22/2012	1,010.3	117.9	4,522.5	75.1388	-	-	4,245.6348	101.4200	23.1792	32.3136	9.1344	8.8660	5.3680	2.2880	-	5.6056	13.5168
2/23/2012	1,011.1	117.9	4,525.7	73.9068	-	-	4,241.1600	108.9528	24.4068	32.5776	9.5216	9.3060	5.3460	2.2660	-	5.3592	12.9184

TRPP
Tenaska Roans Prairie Generating Station
Grimes County, Texas
Historical Fuel Data and Statistical Analysis

Gas Day Date	Heating Value	CO_2 Intensity	Total CO_2	CO_2 Cont	O_2 Cont	N_2 Cont	Methane Cont	Ethane Cont	Propane Cont	I Butane Cont	N Butane Cont	I Pentane Cont	N Pentane Cont	Neo Pentane Cont	N Hexane Cont	Heptane Cont	Octane Cont
Stoichiometry (mol CO_2 / Mol component)				1	0	0	1	2	3	4	4	5	5	5	6	7	8
2/24/2012	1,012.3	118.1	4,539.6	74.5404	-	-	4,238.4100	111.1352	26.7696	37.2240	10.5424	10.2740	6.0940	2.7060	-	6.4372	15.4880
2/25/2012	1,012.0	118.0	4,534.1	73.2204	-	-	4,241.5912	109.1992	25.6212	35.5344	10.1728	9.9660	5.9400	2.5960	-	5.9444	14.3264
2/26/2012	1,012.1	117.9	4,531.6	71.8564	-	-	4,242.7440	109.1640	25.2912	34.6896	9.9264	9.7900	5.6980	2.4860	-	5.8520	14.0800
2/27/2012	1,012.0	117.9	4,531.3	71.8432	-	-	4,243.3160	108.4248	25.0404	34.7072	9.8384	9.7240	5.7420	2.4860	-	5.9136	14.2560
2/28/2012	1,014.2	118.2	4,551.9	72.6044	-	-	4,234.5380	118.5712	30.7428	40.2688	11.7568	11.7480	6.5560	2.7720	-	6.5604	15.8048
2/29/2012	1,012.9	118.2	4,545.8	75.3148	-	-	4,239.6684	109.1024	28.6572	39.1248	11.2640	11.0880	6.4020	2.7280	-	6.5912	15.8400
3/1/2012	1,011.6	118.0	4,533.5	74.6856	-	-	4,245.0936	102.6520	25.6080	35.9040	10.2608	10.1420	5.9400	2.5080	-	6.0676	14.6080
3/2/2012	1,013.4	118.3	4,553.3	76.9692	-	-	4,231.8100	116.5736	31.3632	40.8496	11.9856	12.1220	6.6880	2.9700	-	6.4372	15.5232
3/3/2012	1,011.9	118.1	4,538.5	76.4324	-	-	4,235.5148	112.6752	27.4956	36.4672	10.5776	10.5380	6.0720	2.6840	-	5.8828	14.1856
3/4/2012	1,011.3	118.0	4,529.6	74.5580	-	-	4,239.2460	110.3784	25.0272	33.8272	9.6624	9.6580	5.5880	2.4420	-	5.6364	13.5872
3/5/2012	1,011.9	118.0	4,534.7	74.8176	-	-	4,237.6312	112.5960	26.3868	35.1120	10.2256	10.0540	5.7860	2.5080	-	5.7596	13.8336
3/6/2012	1,014.3	118.7	4,570.9	81.3912	-	-	4,217.9412	127.2480	35.7984	45.9888	13.5520	13.7500	7.5020	3.4540	-	7.1456	17.1776
3/7/2012	1,016.4	118.8	4,585.9	78.9756	-	-	4,211.2092	139.1720	39.0192	49.1568	13.5520	14.3660	7.2380	3.7180	-	8.6548	20.8032
3/8/2012	1,017.6	118.8	4,591.3	78.3816	-	-	4,202.5236	152.1960	41.9100	49.0688	14.1328	14.9160	7.5900	3.6080	-	7.9156	19.0432
3/9/2012	1,013.2	118.2	4,548.8	75.8384	-	-	4,221.7384	129.9672	30.7032	38.2272	11.1408	11.2640	6.1820	2.7940	-	6.1292	14.7840
3/10/2012	1,013.5	118.3	4,551.3	75.5084	-	-	4,224.4752	127.0632	30.9012	39.4768	11.3344	12.0560	6.4900	2.9480	-	6.1600	14.8544
3/11/2012	1,011.6	118.1	4,534.1	75.2752	-	-	4,231.8936	118.2544	26.3604	34.6016	9.8912	9.9660	5.6100	2.4420	-	5.7904	13.9744
3/12/2012	1,014.7	118.4	4,562.9	76.6744	-	-	4,217.1800	135.8368	34.5312	41.7120	12.2144	12.5620	6.5560	2.9920	-	6.6528	16.0160
3/13/2012	1,018.9	119.0	4,605.2	78.9184	-	-	4,194.3088	160.5384	45.5664	53.4160	15.6640	16.8080	8.3820	4.1140	-	8.0696	19.3952
3/14/2012	1,018.0	119.0	4,600.8	79.1032	-	-	4,197.8332	154.9240	41.8704	53.6800	15.3648	16.1700	8.5580	4.2240	-	8.5316	20.5568
3/15/2012	1,020.1	119.2	4,618.1	79.0064	-	-	4,192.0604	162.3336	47.4408	57.9744	16.6848	17.7760	8.8440	4.5100	-	9.2400	22.2112
3/16/2012	1,020.3	119.2	4,617.6	80.0096	-	-	4,189.6844	165.6600	49.5792	56.3376	16.8080	17.9740	8.5580	4.0480	-	8.5008	20.4160
3/17/2012	1,021.0	119.2	4,622.4	77.5852	-	-	4,193.8248	162.5096	48.8796	59.3120	17.1952	19.0960	9.3720	4.7520	-	8.7472	21.0848
3/18/2012	1,020.6	119.2	4,618.5	77.8096	-	-	4,194.6432	160.8200	48.4572	58.1328	17.0368	18.6560	9.1960	4.4000	-	8.6240	20.7328
3/19/2012	1,021.1	119.3	4,623.9	77.8184	-	-	4,191.7436	163.4688	50.0544	60.0688	17.7232	19.4700	9.8120	4.7740	-	8.5008	20.4864
3/20/2012	1,018.0	118.8	4,591.2	75.4468	-	-	4,209.2292	145.5344	41.1972	50.7056	14.8016	15.4880	8.1400	3.7400	-	7.8848	19.0080
3/21/2012	1,014.1	118.3	4,554.5	74.2500	-	-	4,225.4960	127.3008	31.6668	40.4448	11.6512	12.0780	6.5340	2.9480	-	6.4988	15.6640
3/22/2012	1,017.7	118.9	4,593.1	76.5776	-	-	4,208.4944	144.4608	40.7748	51.7792	14.7840	15.5980	8.1180	3.8720	-	8.4084	20.2400
3/23/2012	1,018.1	118.9	4,597.2	76.5072	-	-	4,207.6584	144.6544	41.5800	53.5920	15.2592	16.5000	8.5360	4.1360	-	8.4392	20.3456
3/24/2012	1,014.3	118.4	4,557.7	74.9892	-	-	4,225.8480	126.0776	32.1552	41.5888	11.9680	12.2100	6.7980	2.9920	-	6.7760	16.2976
3/25/2012	1,013.2	118.1	4,544.7	74.1004	-	-	4,232.2764	119.3984	29.5152	37.8048	11.0176	11.1540	6.3140	2.7720	-	5.9752	14.3616
3/26/2012	1,013.9	118.2	4,550.5	73.2248	-	-	4,231.6648	121.2376	30.1752	39.6352	11.2992	11.5280	6.3800	2.8160	-	6.6220	15.9456
3/27/2012	1,012.1	118.2	4,541.0	76.0672	-	-	4,237.3892	110.0088	27.8256	37.5936	10.4896	10.6480	6.0060	2.7280	-	6.5296	15.7344
3/28/2012	1,012.4	117.9	4,533.0	71.7552	-	-	4,243.0960	110.0088	25.1328	34.9888	10.0320	9.9220	5.9180	2.6400	-	5.7288	13.7984
3/29/2012	1,012.8	118.0	4,536.6	70.9808	-	-	4,248.2132	103.4792	26.0040	36.9952	10.5776	10.4500	6.2040	2.7060	-	6.1600	14.8192
3/30/2012	1,012.6	118.0	4,536.4	71.7992	-	-	4,243.9364	108.1872	26.1228	36.3792	10.4896	10.3840	6.1160	2.6180	-	5.9752	14.3616
3/31/2012	1,012.7	117.9	4,534.7	71.0336	-	-	4,244.9176	107.8000	26.0964	35.7984	10.4368	10.2520	6.0500	2.5740	-	5.7904	13.9040
4/1/2012	1,012.1	117.9	4,529.7	71.5924	-	-	4,243.8880	108.5920	25.4892	33.9504	10.1376	9.9440	5.7420	2.4420	-	5.2360	12.6368
4/2/2012	1,011.5	117.9	4,527.5	73.3656	-	-	4,240.4692	110.8008	25.2252	32.8944	9.7856	9.6140	5.5220	2.3320	-	5.1436	12.3904
4/3/2012	1,016.9	118.6	4,580.7	77.1540	-	-	4,214.7908	137.9048	40.9068	46.9744	14.3440	15.1800	7.6780	3.3880	-	6.5604	15.7696
4/4/2012	1,019.2	119.2	4,610.8	81.1448	-	-	4,197.2084	153.3136	48.1008	56.2496	17.2480	18.7220	9.3720	4.2020	-	7.4228	17.8464
4/5/2012	1,012.4	118.1	4,541.1	74.9892	-	-	4,232.5140	117.9992	27.9840	36.8368	10.5952	10.5380	5.9840	2.5960	-	6.1600	14.8544
4/6/2012	1,011.2	118.0	4,528.9	74.2632	-	-	4,237.2396	113.1240	24.6312	33.4752	9.5568	9.4160	5.5660	2.3320	-	5.6672	13.6576
4/7/2012	1,011.3	117.9	4,526.4	73.0972	-	-	4,239.3164	112.1120	24.2748	32.6656	9.4864	9.2840	5.3900	2.2880	-	5.4208	13.0240
4/8/2012	1,011.6	117.9	4,527.8	72.3580	-	-	4,240.5616	112.0416	24.2484	33.0880	9.5216	9.3940	5.5000	2.3320	-	5.5132	13.2704
4/9/2012	1,011.4	117.9	4,527.0	72.6748	-	-	4,239.9984	111.6544	24.3408	33.0352	9.5744	9.4380	5.5440	2.3760	-	5.3900	12.9888
4/10/2012	1,011.6	117.9	4,528.6	72.6308	-	-	4,240.3900	111.6280	24.4992	33.5104	9.7504	9.5040	5.6320	2.3760	-	5.4824	13.2352
4/11/2012	1,011.2	117.9	4,526.6	73.9992	-	-	4,240.2008	110.5896	24.3936	32.6832	9.5920	9.3060	5.5000	2.3100	-	5.2976	12.7424
4/12/2012	1,010.6	118.0	4,526.9	76.1508	-	-	4,239.3604	108.5920	24.3012	33.1056	9.6624	9.4380	5.5220	2.3320	-	5.4208	13.0240
4/13/2012	1,010.3	118.0	4,527.1	78.4344	-	-	4,234.3884	112.6664	24.9216	32.5424	9.6976	9.7240	5.5000	2.2660	-	4.9896	12.0032
4/14/2012	1,010.0	118.0	4,525.5	78.5620	-	-	4,236.8568	108.9704	24.4200	32.4368	9.6272	9.4600	5.4560	2.2440	-	5.1128	12.3200
4/15/2012	1,010.0	118.0	4,524.8	78.5400	-	-	4,236.7820	109.2344	24.4200	32.1376	9.6096	9.3720	5.3900	2.2660	-	5.0204	12.0736
4/16/2012	1,009.2	117.8	4,513.5	78.5576	-	-	4,237.9920	109.4632	24.4728	26.8048	9.4512	9.1960	0.2640	2.8160	-	4.2504	10.2080
4/17/2012	1,009.2	117.8	4,513.3	78.5576	-	-	4,238.0008	109.4808	24.4728	26.7168	9.4512	9.1960	0.1980	2.8160	-	4.2196	10.1728

TRPP
Tenaska Roans Prairie Generating Station
Grimes County, Texas
Historical Fuel Data and Statistical Analysis

Gas Day Date	Heating Value	CO_2 Intensity	Total CO_2	CO_2 Cont	O_2 Cont	N_2 Cont	Methane Cont	Ethane Cont	Propane Cont	I Butane Cont	N Butane Cont	I Pentane Cont	N Pentane Cont	Neo Pentane Cont	N Hexane Cont	Heptane Cont	Octane Cont
Stoichiometry (mol CO_2 / Mol component)				1	0	0	1	2	3	4	4	5	5	5	6	7	8
4/18/2012	1,009.2	117.8	4,513.3	78.5576	-	-	4,238.0008	109.4808	24.4728	26.7168	9.4512	9.1960	0.1980	2.8160	-	4.2196	10.1728
4/19/2012	1,011.7	118.4	4,549.7	77.6864	-	-	4,238.2736	107.0168	24.5784	40.6208	8.8528	9.3060	3.7620	2.4420	-	10.9032	26.2592
4/20/2012	1,010.0	118.0	4,524.9	78.1396	-	-	4,236.1528	109.3752	24.5124	32.4544	9.6800	9.3940	5.4560	2.2220	-	5.1436	12.3552
4/21/2012	1,010.2	118.0	4,527.1	78.4696	-	-	4,236.5884	109.3224	24.4992	32.9472	9.6624	9.3500	5.4340	2.2440	-	5.4516	13.0944
4/22/2012	1,010.9	118.0	4,529.7	76.7976	-	-	4,237.0548	110.4048	25.6212	33.7392	9.9440	9.7020	5.7200	2.3760	-	5.3900	12.9536
4/23/2012	1,030.1	120.6	4,717.3	82.7596	-	-	4,155.8308	199.1968	73.1148	87.5072	24.6224	28.6000	13.6400	7.1940	-	13.1516	31.6448
4/24/2012	1,017.8	118.9	4,594.5	78.0824	-	-	4,206.4132	146.5552	42.2928	51.1808	14.9072	15.2900	8.0520	3.7620	-	8.2236	19.7824
4/25/2012	1,017.7	119.0	4,598.4	78.5620	-	-	4,207.5880	142.0760	41.8440	54.1552	15.3824	16.4780	8.4480	4.1800	-	8.7164	21.0144
4/26/2012	1,017.5	118.9	4,592.4	78.2232	-	-	4,206.2636	145.5696	41.8176	50.9344	14.7664	15.4880	7.8980	3.9380	-	8.0696	19.3952
4/27/2012	1,015.2	118.5	4,566.7	75.6008	-	-	4,218.7112	134.6136	34.5180	43.6832	12.7952	13.1340	6.9960	3.2340	-	6.8684	16.5440
4/28/2012	1,012.9	118.2	4,544.1	75.4820	-	-	4,227.3792	125.2592	28.8948	36.8720	10.8240	10.9780	6.1820	2.5960	-	5.7596	13.9040
4/29/2012	1,010.9	118.0	4,527.9	75.8120	-	-	4,231.9816	118.3072	24.6576	32.5424	9.4512	9.4600	5.4780	2.1560	-	5.2976	12.7776
4/30/2012	1,010.6	117.9	4,524.6	75.7020	-	-	4,232.5536	117.7352	24.0900	31.4512	9.1872	9.2620	5.2360	2.1120	-	5.0512	12.1792
5/1/2012	1,010.9	118.0	4,528.0	75.9924	-	-	4,232.6548	117.1456	25.1196	32.6128	9.6272	9.6140	5.5660	2.2000	-	5.1128	12.3200
5/2/2012	1,011.3	118.0	4,532.1	76.1156	-	-	4,232.6944	117.2160	25.8060	33.9504	9.9616	10.0100	5.7640	2.3100	-	5.3592	12.9184
5/3/2012	1,011.6	118.1	4,535.1	75.8164	-	-	4,234.4236	115.1304	26.2152	35.2176	10.2784	10.1640	5.8300	2.4200	-	5.7596	13.8336
5/4/2012	1,011.5	118.1	4,534.0	75.5568	-	-	4,233.7548	115.7992	25.9644	34.9360	10.1200	10.1200	5.7200	2.3320	-	5.7904	13.9392
5/5/2012	1,010.8	118.0	4,529.3	77.0528	-	-	4,232.6636	115.9312	25.1196	33.1760	9.6976	9.7900	5.5660	2.2440	-	5.2976	12.7424
5/6/2012	1,011.1	118.0	4,529.3	75.1740	-	-	4,233.8472	116.4240	24.9744	33.2464	9.6272	9.6580	5.5220	2.2440	-	5.4516	13.1296
5/7/2012	1,011.8	118.0	4,534.0	75.3456	-	-	4,234.3972	118.0872	25.4892	34.0032	9.7504	9.8340	5.6980	2.3540	-	5.6056	13.4816
5/8/2012	1,011.5	117.9	4,529.5	74.0300	-	-	4,235.5016	116.5472	24.9480	33.0352	9.4864	9.5480	5.5660	2.2440	-	5.4516	13.0944
5/9/2012	1,012.0	118.0	4,534.3	73.5372	-	-	4,235.4356	115.7816	26.1624	35.1648	10.0848	10.2080	5.9400	2.4420	-	5.7596	13.8336
5/10/2012	1,011.7	118.0	4,533.4	74.8088	-	-	4,233.3764	117.7352	25.7400	34.4784	9.9440	10.0760	5.8520	2.3760	-	5.5748	13.4112
5/11/2012	1,011.0	118.0	4,530.5	75.7240	-	-	4,233.0376	116.7496	24.5124	33.7216	9.3984	9.6360	5.5220	2.3320	-	5.8212	14.0096
5/12/2012	1,011.8	118.0	4,533.3	74.3160	-	-	4,233.0596	119.0288	25.4892	34.3024	9.7856	9.9660	5.8300	2.3980	-	5.6056	13.5168
5/13/2012	1,011.5	118.0	4,532.5	74.9628	-	-	4,233.1344	118.1840	25.1856	34.0736	9.6272	9.8560	5.6540	2.4200	-	5.6980	13.6928
5/14/2012	1,011.7	118.0	4,532.1	74.5008	-	-	4,233.3764	118.6592	25.5420	33.7744	9.7504	9.9220	5.6540	2.3760	-	5.4516	13.0944
5/15/2012	1,012.8	118.1	4,540.4	74.5360	-	-	4,230.0016	124.4232	27.2580	35.5696	10.2608	10.5820	5.8960	2.5300	-	5.6980	13.6928
5/16/2012	1,012.7	118.1	4,539.5	74.3600	-	-	4,230.9872	123.8600	26.4132	35.2880	10.0144	10.2080	5.9180	2.4860	-	5.8520	14.0800
5/17/2012	1,012.5	118.1	4,538.5	74.4216	-	-	4,233.9484	118.7384	26.9412	35.6400	10.3312	10.4720	5.9180	2.4860	-	5.7596	13.8336
5/18/2012	1,012.3	118.0	4,536.6	74.6636	-	-	4,230.2436	123.5432	26.2944	34.5664	9.9792	10.1860	5.8300	2.4860	-	5.5132	13.2704
5/19/2012	1,012.1	118.0	4,535.6	74.4480	-	-	4,230.7848	122.7336	26.1624	34.3728	9.8208	10.1420	5.7640	2.4640	-	5.5440	13.3760
5/20/2012	1,011.8	118.0	4,532.3	74.6064	-	-	4,232.0696	120.5776	25.7136	33.5632	9.7328	9.9220	5.7640	2.4200	-	5.2668	12.6720
5/21/2012	1,011.9	118.1	4,537.4	76.6348	-	-	4,227.4452	125.2944	26.1360	34.5136	9.8560	10.0980	5.7860	2.4420	-	5.6364	13.5520
5/22/2012	1,013.2	118.1	4,544.4	74.2764	-	-	4,231.9244	120.7624	29.3436	37.3824	10.7712	11.6160	6.3360	2.8600	-	5.6056	13.5168
5/23/2012	1,013.3	118.1	4,543.0	73.4712	-	-	4,232.5140	120.7008	29.3832	36.9776	10.9472	11.4840	6.2260	2.7940	-	5.4208	13.0592
5/24/2012	1,012.1	118.0	4,536.1	75.2444	-	-	4,233.8296	117.5416	27.2712	34.8832	10.2784	10.6920	5.8080	2.5740	-	5.2668	12.6720
5/25/2012	1,012.3	118.0	4,535.7	74.4128	-	-	4,236.6148	115.0512	27.2184	35.0768	10.4192	10.6920	6.1600	2.6400	-	5.1128	12.2848
5/26/2012	1,011.4	118.0	4,530.7	75.3192	-	-	4,237.4640	112.4024	25.6080	33.8976	9.9968	10.0980	5.8960	2.4640	-	5.1436	12.3904
5/27/2012	1,011.5	117.9	4,529.6	74.4304	-	-	4,235.2156	116.2216	25.7664	33.1408	9.8736	9.9880	5.7420	2.4200	-	4.9280	11.8624
5/28/2012	1,011.0	117.9	4,525.9	75.1388	-	-	4,235.6864	114.7080	25.3308	32.0320	9.7328	9.7680	5.5880	2.3980	-	4.5584	10.9824
5/29/2012	1,010.8	117.9	4,524.7	75.2356	-	-	4,237.2484	112.4024	24.8688	31.9088	9.5568	9.6800	5.5880	2.3320	-	4.6508	11.2288
5/30/2012	1,012.3	118.0	4,534.6	74.3160	-	-	4,232.7120	119.6096	28.2744	34.1792	10.4720	10.9120	6.0500	2.6180	-	4.5276	10.9120
5/31/2012	1,011.7	117.9	4,527.0	72.7276	-	-	4,243.4920	107.8176	25.9908	32.9120	9.9440	10.3620	5.7640	2.5300	-	4.5276	10.9120
6/1/2012	1,011.4	117.9	4,525.8	73.6164	-	-	4,239.8708	111.1880	25.6740	32.1904	9.7856	9.9000	5.5880	2.3540	-	4.5892	11.0176
6/2/2012	1,016.2	118.6	4,575.2	77.2288	-	-	4,213.1012	138.5296	39.7452	45.8304	13.6752	15.6420	7.7880	3.8280	-	5.8212	14.0448
6/3/2012	1,013.3	118.1	4,545.0	75.7328	-	-	4,225.3552	126.7904	31.9572	36.5904	11.4400	11.7260	6.3140	2.7500	-	4.8048	11.5456
6/4/2012	1,013.2	118.2	4,545.7	76.1288	-	-	4,224.4972	126.5176	31.8912	37.3120	11.4048	12.3200	6.5560	3.0360	-	4.7124	11.3696
6/5/2012	1,013.7	118.2	4,548.9	76.3532	-	-	4,223.0012	128.7352	33.7656	37.5408	11.7392	12.3640	6.4680	3.0360	-	4.6816	11.2640
6/6/2012	1,010.4	117.8	4,520.5	75.7944	-	-	4,238.2516	110.2816	25.4892	30.4304	9.5744	9.8120	5.4560	2.2660	-	3.8500	9.2576
6/7/2012	1,010.9	117.9	4,524.8	76.1376	-	-	4,238.7048	109.5072	26.5320	31.9088	10.1552	10.2740	5.7860	2.4420	-	3.9116	9.4336
6/8/2012	1,010.3	117.8	4,519.8	75.8164	-	-	4,237.0064	111.6632	25.2120	30.2192	9.5216	9.7240	5.4340	2.2440	-	3.8192	9.1872
6/9/2012	1,010.3	117.9	4,520.7	76.3004	-	-	4,236.1264	112.2088	25.3308	30.3952	9.4336	9.8340	5.3900	2.2440	-	3.9424	9.4688
6/10/2012	1,010.4	117.9	4,521.7	76.9164	-	-	4,233.9308	114.3472	26.4660	30.2896	9.7152	9.8780	5.4780	2.3540	-	3.6036	8.6944

TRPP
Tenaska Roans Prairie Generating Station
Grimes County, Texas
Historical Fuel Data and Statistical Analysis

Gas Day Date	Heating Value	CO_2 Intensity	Total CO_2	CO_2 Cont	O_2 Cont	N_2 Cont	Methane Cont	Ethane Cont	Propane Cont	I Butane Cont	N Butane Cont	I Pentane Cont	N Pentane Cont	Neo Pentane Cont	N Hexane Cont	Heptane Cont	Octane Cont
Stoichiometry (mol CO_2 / Mol component)				1	0	0	1	2	3	4	4	5	5	5	6	7	8
6/11/2012	1,010.7	117.9	4,522.8	76.2432	-	-	4,234.4456	114.9896	26.2416	30.5712	9.6624	9.8780	5.5000	2.2880	-	3.8192	9.1872
6/12/2012	1,010.8	117.9	4,524.6	76.9736	-	-	4,235.2464	112.9832	26.8752	31.5216	10.1728	10.4500	5.8960	2.5300	-	3.5112	8.4832
6/13/2012	1,010.7	117.9	4,524.9	76.3004	-	-	4,241.0104	105.7760	26.3736	32.4720	10.1024	10.4280	5.8300	2.5300	-	4.1272	9.9616
6/14/2012	1,012.0	118.0	4,535.8	76.9340	-	-	4,229.2404	119.3984	30.9012	34.2848	10.9472	11.3300	6.0940	2.6400	-	4.0964	9.8912
6/15/2012	1,010.0	117.9	4,522.0	78.4828	-	-	4,236.0032	109.4720	25.9908	31.0992	9.8032	10.0540	5.6980	2.3760	-	3.8192	9.2224
6/16/2012	1,016.7	118.7	4,583.6	80.3968	-	-	4,207.8124	140.2544	44.7348	48.1536	15.2240	17.2040	8.5360	4.4000	-	4.9588	11.9680
6/17/2012	1,021.5	119.2	4,623.3	82.9972	-	-	4,180.7436	175.3224	58.5552	54.6832	17.5472	19.5580	9.0640	4.6200	-	5.9444	14.2912
6/18/2012	1,028.7	120.0	4,687.0	85.2324	-	-	4,151.2460	209.1144	79.2528	70.7520	23.0208	25.9600	11.3740	5.9840	-	7.3612	17.7408
6/19/2012	1,023.7	119.6	4,647.0	82.2492	-	-	4,179.1772	175.0672	60.9576	64.9440	20.1872	23.2100	10.8460	6.1600	-	7.0840	17.0720
6/20/2012	1,027.0	120.5	4,697.7	95.3348	-	-	4,150.4672	191.9896	80.6784	78.6720	24.7280	30.8440	13.5080	7.3040	-	7.1148	17.1072
6/21/2012	1,017.8	119.2	4,607.3	88.4180	-	-	4,198.0004	142.4808	52.7604	55.0704	17.6704	20.8120	9.8120	4.6420	-	5.1744	12.4608
6/22/2012	1,018.9	119.4	4,618.9	89.7644	-	-	4,191.8668	148.4648	55.8360	58.4320	18.9024	22.1320	10.5600	5.0380	-	5.2668	12.6720
6/23/2012	1,014.0	118.5	4,563.4	82.2492	-	-	4,220.2072	125.1184	37.5012	42.3456	12.9184	14.0580	7.1720	3.8060	-	5.2976	12.7424
6/24/2012	1,014.4	118.6	4,565.9	81.6860	-	-	4,219.6660	125.8224	38.7948	43.4544	13.6224	15.3340	7.6780	3.8940	-	4.6816	11.2640
6/25/2012	1,016.0	118.7	4,579.4	83.4240	-	-	4,208.7584	139.1720	44.1276	45.1440	14.5200	15.4660	7.8320	3.8500	-	5.0204	12.0736
6/26/2012	1,015.0	118.7	4,575.5	85.5052	-	-	4,211.5656	131.2784	43.7844	45.3200	14.9952	16.2580	8.2280	3.8280	-	4.3120	10.4192
6/27/2012	1,015.5	118.6	4,572.7	82.2888	-	-	4,216.3616	128.9640	43.7184	44.4928	14.5728	16.4340	8.0520	3.6960	-	4.1580	9.9968
6/28/2012	1,009.1	118.0	4,520.1	81.5496	-	-	4,245.4984	94.3448	25.5684	31.7504	10.4368	10.3400	5.9180	2.3980	-	3.6036	8.6592
6/29/2012	1,009.5	117.9	4,520.0	79.8512	-	-	4,246.9724	93.7816	25.8720	31.9440	10.4192	10.5160	5.9180	2.5520	-	3.5728	8.5888
6/30/2012	1,009.8	118.0	4,523.0	79.8644	-	-	4,246.8140	94.9960	25.8588	32.6304	10.3488	10.6480	6.0280	2.5520	-	3.8808	9.3632
7/1/2012	1,009.6	117.9	4,519.8	79.1340	-	-	4,251.5440	89.1880	25.3044	32.3488	10.3312	10.6040	6.1160	2.5300	-	3.7268	8.9760
7/2/2012	1,009.9	117.9	4,520.0	78.0780	-	-	4,246.1144	97.6272	25.2780	31.5392	10.1024	10.1860	5.8300	2.4200	-	3.7576	9.0816
7/3/2012	1,009.0	117.9	4,515.7	79.5256	-	-	4,246.9680	94.4328	24.3276	30.4480	9.6448	9.8780	5.6760	2.3320	-	3.6652	8.8000
7/4/2012	1,008.7	118.0	4,517.5	81.2856	-	-	4,250.9984	86.8032	24.5124	31.9088	10.0672	10.2300	5.9400	2.5300	-	3.8808	9.3280
7/5/2012	1,009.0	117.9	4,518.1	80.4672	-	-	4,254.8132	83.3008	24.6048	32.2960	10.1024	10.2960	6.0280	2.5520	-	4.0040	9.6096
7/6/2012	1,009.5	117.9	4,520.1	79.5168	-	-	4,249.1460	91.8368	25.3308	32.1024	10.2608	10.3180	5.9400	2.4640	-	3.8808	9.2928
7/7/2012	1,009.3	117.9	4,519.5	80.2604	-	-	4,247.3332	93.3944	25.4100	31.6624	10.1728	10.3400	5.8300	2.4200	-	3.7268	8.9760
7/8/2012	1,009.0	118.0	4,519.0	81.5804	-	-	4,248.1472	90.7192	25.0404	31.8912	10.2960	10.3620	6.0720	2.5520	-	3.6036	8.6944
7/9/2012	1,009.2	117.9	4,519.2	80.9732	-	-	4,243.8220	97.1608	25.5156	31.1872	10.1200	10.3180	5.8960	2.3980	-	3.4804	8.3776
7/10/2012	1,011.6	118.2	4,538.2	80.7884	-	-	4,234.3444	110.1056	30.9012	35.6752	11.3520	12.3640	6.4240	2.9480	-	3.9116	9.3984
7/11/2012	1,014.9	118.5	4,567.1	80.4936	-	-	4,224.7480	122.0736	38.7816	43.7888	13.2704	15.7520	7.6120	4.0480	-	4.8356	11.6512
7/12/2012	1,014.4	118.5	4,562.7	80.2868	-	-	4,227.6256	118.5536	37.2372	42.9440	12.9888	15.3780	7.4800	4.0040	-	4.7740	11.4752
7/13/2012	1,013.4	118.3	4,553.6	80.4320	-	-	4,229.9180	115.9048	35.2308	40.0048	12.3552	14.2340	7.0620	3.6300	-	4.3428	10.4544
7/14/2012	1,010.3	118.0	4,526.4	79.6708	-	-	4,239.7388	103.9192	27.1128	32.8592	10.5072	10.7140	6.0060	2.5300	-	3.9116	9.4336
7/15/2012	1,009.1	117.9	4,515.2	79.4288	-	-	4,239.9456	103.7960	24.4068	29.3392	9.5040	9.6580	5.4120	2.2660	-	3.3572	8.0960
7/16/2012	1,009.3	117.9	4,518.5	79.7984	-	-	4,240.2580	102.9424	25.3968	30.3248	9.7680	9.8780	5.4780	2.2440	-	3.6344	8.8000
7/17/2012	1,009.5	117.9	4,517.5	79.1208	-	-	4,234.2036	111.3640	25.6212	29.1984	9.5744	9.6360	5.3900	2.1780	-	3.2956	7.9552
7/18/2012	1,009.2	117.8	4,513.8	77.9284	-	-	4,247.4608	95.4800	24.0768	29.7968	9.5040	9.7460	5.4780	2.2880	-	3.5420	8.5184
7/19/2012	1,009.6	117.9	4,520.0	78.9140	-	-	4,247.0560	94.5648	25.6344	32.0320	10.3840	10.4500	5.9400	2.5300	-	3.6652	8.8352
7/20/2012	1,009.3	117.9	4,517.6	79.1428	-	-	4,245.4456	96.3512	24.9084	31.0112	9.9792	9.8560	5.6980	2.3100	-	3.7884	9.1520
7/21/2012	1,023.1	119.0	4,621.5	75.0464	-	-	4,192.1132	165.8360	63.2544	54.9648	17.4240	22.0660	9.0640	4.7080	-	4.9896	12.0384
7/22/2012	1,014.8	118.3	4,558.1	78.2364	-	-	4,223.3928	126.6232	39.7452	39.2656	12.8480	13.6840	6.9520	3.1020	-	4.1888	10.0672
7/23/2012	1,010.8	118.0	4,528.1	78.3552	-	-	4,237.0284	108.0904	28.2744	33.1056	10.6480	10.9340	6.0280	2.6840	-	3.7884	9.1520
7/24/2012	1,010.6	118.0	4,528.0	78.4080	-	-	4,234.1068	110.4312	28.4724	33.1936	10.5248	11.1540	6.1380	2.6840	-	3.7576	9.0816
7/25/2012	1,011.2	118.1	4,534.6	79.0592	-	-	4,234.7888	107.8352	31.0464	35.6048	11.2464	12.4300	6.4460	2.9700	-	3.8808	9.3280
7/26/2012	1,009.5	117.9	4,518.2	79.2000	-	-	4,244.3764	97.6008	25.9380	30.9408	10.1024	10.3180	5.7860	2.4200	-	3.3880	8.1664
7/27/2012	1,009.8	118.0	4,522.6	80.1460	-	-	4,235.7128	107.5536	27.0336	31.3456	10.1376	10.5380	5.7200	2.4640	-	3.5112	8.4480
7/28/2012	1,008.7	117.9	4,513.8	79.9700	-	-	4,236.6500	106.5064	24.0636	28.7936	9.3104	9.3060	5.1920	2.1340	-	3.4804	8.3776
7/29/2012	1,008.9	117.9	4,514.9	79.3540	-	-	4,237.2572	106.5680	24.1296	29.1632	9.2752	9.3720	5.3020	2.2000	-	3.6036	8.6592
7/30/2012	1,009.7	117.9	4,518.9	77.8800	-	-	4,236.6324	108.4336	25.7532	30.3072	9.5568	9.9660	5.4120	2.3760	-	3.6960	8.8704
7/31/2012	1,009.5	117.9	4,517.3	78.4212	-	-	4,233.0904	113.1944	25.3176	29.0576	9.3280	9.4820	5.1260	2.1120	-	3.5728	8.6240
8/1/2012	1,009.8	118.0	4,522.7	80.1768	-	-	4,234.8812	109.2696	26.7036	30.9584	9.8560	10.1200	5.6320	2.3540	-	3.7268	8.9760
8/2/2012	1,009.0	117.9	4,517.9	80.6344	-	-	4,236.9360	105.6968	24.8952	30.0784	9.4512	9.8560	5.4340	2.3100	-	3.6960	8.8704
8/3/2012	1,008.1	117.8	4,510.5	80.6124	-	-	4,249.7004	89.5840	22.9812	29.1456	9.2224	9.3720	5.3020	2.1780	-	3.6344	8.7296

TRPP
Tenaska Roans Prairie Generating Station
Grimes County, Texas
Historical Fuel Data and Statistical Analysis

Gas Day Date	Heating Value	CO_2 Intensity	Total CO_2	CO_2 Cont	O_2 Cont	N_2 Cont	Methane Cont	Ethane Cont	Propane Cont	I Butane Cont	N Butane Cont	I Pentane Cont	N Pentane Cont	Neo Pentane Cont	N Hexane Cont	Heptane Cont	Octane Cont
Stoichiometry (mol CO_2 / Mol component)				1	0	0	1	2	3	4	4	5	5	5	6	7	8
8/4/2012	1,009.3	117.8	4,515.0	78.4080	-	-	4,242.3832	101.6048	24.6444	29.4976	9.6272	9.7240	5.3900	2.2220	-	3.3880	8.1312
8/5/2012	1,012.6	118.1	4,540.7	76.9252	-	-	4,228.4924	120.1728	32.5644	35.9040	11.3520	12.6720	6.4460	2.9700	-	3.8808	9.3280
8/6/2012	1,011.8	118.1	4,538.4	78.9448	-	-	4,228.0700	118.4920	31.1784	35.2528	10.9648	11.8140	6.1160	2.7720	-	4.3428	10.4896
8/7/2012	1,009.7	118.0	4,524.2	80.5420	-	-	4,239.6552	101.4992	27.1920	32.6128	10.2432	11.0000	6.0060	2.5960	-	3.7576	9.0816
8/8/2012	1,010.6	118.1	4,531.0	80.6300	-	-	4,238.1020	104.1040	29.2908	34.1264	10.8768	11.2200	6.2040	2.7500	-	4.0040	9.6448
8/9/2012	1,010.2	118.0	4,526.8	80.8852	-	-	4,239.3032	102.9600	28.2744	32.7008	10.5600	10.8460	5.9620	2.5080	-	3.7576	9.0816
8/10/2012	1,010.3	118.0	4,527.2	80.1020	-	-	4,232.4436	112.1032	27.9840	32.2432	10.2080	10.6260	5.8080	2.5080	-	3.8808	9.3280
8/11/2012	1,008.9	117.9	4,516.9	80.6564	-	-	4,237.1692	105.3448	25.1724	29.6032	9.3632	9.6580	5.3240	2.2440	-	3.6344	8.7648
8/12/2012	1,009.6	118.0	4,523.7	80.6784	-	-	4,237.1692	104.5088	26.8752	32.2256	10.1552	10.7800	5.9400	2.5520	-	3.7576	9.0112
8/13/2012	1,023.3	119.1	4,625.4	77.3828	-	-	4,180.4972	182.1688	61.6044	54.0144	17.4240	19.8880	8.8440	4.7740	-	5.5132	13.2704
8/14/2012	1,020.5	119.0	4,611.6	81.8576	-	-	4,187.8320	167.6224	56.2848	51.4624	16.5968	18.5680	8.6460	4.4220	-	5.3900	12.9536
8/15/2012	1,015.1	118.7	4,574.7	86.3852	-	-	4,204.1164	142.5512	43.9032	42.6800	14.3616	14.8060	7.4360	3.3000	-	4.4352	10.7008
8/16/2012	1,011.9	118.3	4,544.1	82.8476	-	-	4,222.5040	122.4432	33.8844	35.7456	11.6864	11.9680	6.2700	2.7280	-	4.0964	9.8912
8/17/2012	1,009.5	118.0	4,520.8	80.1812	-	-	4,231.8232	113.0184	25.6476	30.2896	9.6096	9.8340	5.5220	2.2440	-	3.7268	8.9408
8/18/2012	1,009.5	117.9	4,517.2	78.3684	-	-	4,234.0188	112.1736	24.6576	29.4272	9.3280	9.6580	5.5000	2.2880	-	3.4496	8.3424
8/19/2012	1,009.5	117.9	4,517.3	77.7436	-	-	4,235.3476	111.2672	23.8392	29.5856	9.0640	9.2840	5.1920	2.1340	-	4.0656	9.8208
8/20/2012	1,009.4	117.9	4,516.9	78.1088	-	-	4,235.9812	110.0704	24.0372	29.5152	9.1168	9.4380	5.3240	2.2220	-	3.8192	9.2576
8/21/2012	1,009.4	117.8	4,516.4	78.2276	-	-	4,238.1064	107.5008	23.9184	29.5328	9.2048	9.3720	5.3900	2.2220	-	3.7884	9.1520
8/22/2012	1,009.6	117.9	4,518.1	77.6116	-	-	4,238.0448	108.4160	24.0900	30.0080	9.1872	9.4820	5.4340	2.2880	-	3.9732	9.5744
8/23/2012	1,010.2	117.9	4,522.0	77.4048	-	-	4,234.1948	113.2472	25.3308	30.8880	9.5040	9.9880	5.5880	2.3980	-	3.9424	9.5040
8/24/2012	1,011.0	118.0	4,530.4	78.6676	-	-	4,228.4000	120.3664	27.4824	32.4544	10.0320	10.4280	5.7420	2.5080	-	4.2196	10.1376
8/25/2012	1,011.2	118.1	4,534.4	79.9084	-	-	4,225.2320	122.9712	28.9080	33.3520	10.4192	10.9120	5.9180	2.5960	-	4.1580	10.0320
8/26/2012	1,011.8	118.2	4,539.7	80.2164	-	-	4,220.9992	127.2744	31.2312	34.5840	11.0352	11.3960	6.1820	2.7500	-	4.0964	9.8912
8/27/2012	1,011.2	118.1	4,533.8	79.0944	-	-	4,228.2724	118.4744	29.3568	33.7568	10.3840	10.9560	5.8300	2.7280	-	4.3736	10.5248
8/28/2012	1,012.4	118.3	4,546.8	81.6156	-	-	4,218.5132	128.4096	34.1616	36.4320	11.7568	12.0120	6.5120	2.9040	-	4.2504	10.2080
8/29/2012	1,012.2	118.3	4,547.0	81.8400	-	-	4,223.0364	122.5664	33.0792	37.3296	11.8624	12.1440	6.5560	3.0360	-	4.5584	10.9472
8/30/2012	1,010.1	118.1	4,529.2	81.2768	-	-	4,238.3000	102.8104	27.7068	34.1264	10.7184	10.8680	6.3140	2.7280	-	4.2196	10.1376
8/31/2012	1,009.1	118.0	4,519.9	80.8544	-	-	4,247.7512	91.0448	25.1196	32.3840	10.0496	10.4500	6.0060	2.5960	-	4.0040	9.6096
9/1/2012	1,008.8	117.8	4,512.6	78.5796	-	-	4,239.9808	103.8136	23.5356	28.8112	9.1168	9.3940	5.2140	2.2000	-	3.5112	8.4832
9/2/2012	1,009.1	117.9	4,515.1	78.5048	-	-	4,235.6996	109.8768	23.5356	28.9520	8.8880	9.1740	5.1700	2.1780	-	3.8500	9.2928
9/3/2012	1,009.0	117.9	4,516.2	78.9052	-	-	4,235.1804	110.0352	23.4960	29.2864	8.9056	9.0860	5.1260	2.0900	-	4.1272	9.9616
9/4/2012	1,009.2	117.9	4,515.6	78.0340	-	-	4,235.6556	110.2024	23.7600	29.1632	8.9936	9.1960	5.2800	2.2000	-	3.8500	9.2576
9/5/2012	1,009.1	117.8	4,513.4	77.6248	-	-	4,240.6320	104.5528	23.5884	28.7936	9.0112	9.1960	5.1260	2.1340	-	3.7268	8.9760
9/6/2012	1,012.3	118.3	4,544.8	79.6048	-	-	4,226.5608	118.6768	32.5908	37.8928	11.9328	12.9800	6.6880	3.2120	-	4.3120	10.3840
9/7/2012	1,010.6	118.0	4,525.9	78.4520	-	-	4,234.2520	112.8424	27.2052	31.5568	9.9616	10.4500	5.4560	2.3980	-	3.9116	9.4336
9/8/2012	1,010.3	117.9	4,523.1	77.7568	-	-	4,231.6560	115.4296	26.6508	30.8880	9.6448	10.0760	5.5440	2.4640	-	3.8192	9.1872
9/9/2012	1,011.1	118.1	4,533.0	78.0736	-	-	4,226.5256	121.0440	28.2612	33.7920	10.1728	10.6480	5.7420	2.5960	-	4.7432	11.4400
9/10/2012	1,010.3	118.0	4,527.5	78.9272	-	-	4,230.5032	114.9808	26.9808	32.5776	9.8384	10.3620	5.7420	2.5080	-	4.4352	10.6304
9/11/2012	1,009.8	118.0	4,523.5	79.0240	-	-	4,235.7788	108.1784	25.7400	31.9616	9.5744	10.2300	5.5440	2.4420	-	4.4044	10.5952
9/12/2012	1,011.1	118.1	4,532.2	78.5664	-	-	4,230.3492	116.3888	28.3932	33.7568	10.2960	11.0660	5.9400	2.6840	-	4.3428	10.4544
9/13/2012	1,009.2	117.8	4,513.0	76.7888	-	-	4,237.3188	109.2080	23.3772	28.5648	8.8704	9.2180	5.2580	2.2440	-	3.5728	8.5536
9/14/2012	1,009.6	117.9	4,517.7	77.5852	-	-	4,235.9064	111.1176	24.0372	29.6384	9.0816	9.3940	5.3460	2.2660	-	3.9116	9.4336
9/15/2012	1,009.8	117.9	4,520.5	78.0208	-	-	4,234.0144	112.7104	24.8292	30.3600	9.0992	9.7020	5.3680	2.2880	-	4.1580	9.9968
9/16/2012	1,009.2	117.8	4,513.8	77.4312	-	-	4,238.2076	108.0112	23.4036	28.7056	8.8352	9.1960	5.2580	2.2440	-	3.6652	8.8352
9/17/2012	1,009.4	117.8	4,516.0	77.7304	-	-	4,237.3804	108.6888	23.8788	29.3216	9.0288	9.3720	5.2360	2.2000	-	3.8500	9.2928
9/18/2012	1,010.7	118.0	4,528.1	77.8360	-	-	4,231.8100	115.1832	27.1128	32.5952	9.8560	10.5380	5.5880	2.4640	-	4.4352	10.6656
9/19/2012	1,010.7	118.0	4,526.3	76.2960	-	-	4,236.8348	109.9472	26.6640	32.7712	9.8208	10.5820	5.6760	2.5080	-	4.4660	10.7712
9/20/2012	1,010.3	118.0	4,524.7	76.5292	-	-	4,241.5912	103.1008	25.5156	33.3168	9.9264	10.5160	5.9180	2.5520	-	4.6200	11.1232
9/21/2012	1,011.8	118.1	4,538.3	77.5016	-	-	4,231.4976	114.9368	30.0432	36.1328	10.9472	11.9020	6.1380	2.7280	-	4.8356	11.6160
9/22/2012	1,010.3	117.9	4,523.9	76.6744	-	-	4,235.3432	110.8888	25.9776	32.0496	9.6624	10.0980	5.5660	2.3320	-	4.4968	10.8416
9/23/2012	1,009.8	117.9	4,522.0	77.8668	-	-	4,232.6020	112.9304	25.2912	31.2576	9.3104	9.7900	5.3900	2.2660	-	4.4968	10.8416
9/24/2012	1,009.9	117.9	4,521.0	76.7448	-	-	4,232.9056	114.4000	24.6840	30.7296	9.1520	9.5480	5.2360	2.1560	-	4.5276	10.8768
9/25/2012	1,010.2	117.9	4,520.4	76.6524	-	-	4,231.5592	117.3040	25.3836	29.9376	9.3808	9.6800	5.4120	2.2000	-	3.7884	9.1168
9/26/2012	1,010.9	117.9	4,526.6	76.9868	-	-	4,228.5540	120.9560	27.1524	31.4336	9.8384	10.3400	5.5220	2.3320	-	3.9732	9.5392

TRPP
Tenaska Roans Prairie Generating Station
Grimes County, Texas
Historical Fuel Data and Statistical Analysis

Gas Day Date	Heating Value	CO_2 Intensity	Total CO_2	CO_2 Cont	O_2 Cont	N_2 Cont	Methane Cont	Ethane Cont	Propane Cont	I Butane Cont	N Butane Cont	I Pentane Cont	N Pentane Cont	Neo Pentane Cont	N Hexane Cont	Heptane Cont	Octane Cont
Stoichiometry (mol CO_2 / Mol component)				1	0	0	1	2	3	4	4	5	5	5	6	7	8
9/27/2012	1,011.3	117.9	4,528.7	75.6404	-	-	4,228.9544	121.7480	27.6012	32.0672	9.9264	10.3180	5.5660	2.3760	-	4.2504	10.2080
9/28/2012	1,010.2	117.9	4,521.6	77.5896	-	-	4,231.1148	117.1632	26.0172	30.0432	9.4688	9.9220	5.3240	2.1560	-	3.7576	9.0112
9/29/2012	1,009.4	117.8	4,516.4	78.1792	-	-	4,233.6888	113.0008	24.2352	28.8640	8.9232	9.2620	5.1040	2.0680	-	3.8192	9.2224
9/30/2012	1,009.4	117.9	4,517.5	77.7920	-	-	4,233.8076	112.9656	23.7468	29.5856	8.9936	9.2840	5.2140	2.1340	-	4.0964	9.8912
10/1/2012	1,009.6	117.9	4,517.9	77.3080	-	-	4,234.9120	112.0856	24.1032	29.6384	8.9408	9.3500	5.0820	2.0900	-	4.2196	10.1376
10/2/2012	1,009.5	117.8	4,516.4	76.6964	-	-	4,235.9020	111.4168	23.6940	29.3216	8.8352	9.2180	5.0160	2.0900	-	4.1888	10.0672
10/3/2012	1,013.9	118.3	4,552.2	78.6632	-	-	4,214.7996	140.0432	34.7556	35.8512	10.4368	12.2320	5.7420	2.8600	-	4.9280	11.8624
10/4/2012	1,010.3	117.9	4,523.9	78.1264	-	-	4,230.9300	117.7792	25.4760	30.5008	9.1168	9.5480	5.1920	2.1560	-	4.4352	10.6656
10/5/2012	1,009.2	117.9	4,518.1	79.3188	-	-	4,232.3512	113.4672	23.9712	29.4976	8.9936	9.2620	5.1260	2.0900	-	4.1272	9.9264
10/6/2012	1,009.6	117.9	4,518.5	77.4752	-	-	4,233.2488	114.0568	23.9184	29.7616	8.9232	9.2840	5.2140	2.1340	-	4.2504	10.2080
10/7/2012	1,010.0	117.9	4,520.7	75.6404	-	-	4,234.6348	113.6960	23.6808	30.9232	9.0112	9.2840	5.2580	2.1780	-	4.8048	11.5808
10/8/2012	1,010.0	117.9	4,520.5	75.2400	-	-	4,234.9692	112.5696	23.7600	31.2928	9.0464	9.4380	5.3020	2.2220	-	4.8972	11.7568
10/9/2012	1,009.7	118.0	4,522.4	78.4652	-	-	4,231.5108	115.4296	23.9580	30.8880	9.0464	9.2840	5.1920	2.0900	-	4.8356	11.6512
10/10/2012	1,010.0	117.9	4,520.9	77.1848	-	-	4,231.2820	118.8528	23.5356	29.7440	8.8000	9.0860	5.0160	2.1120	-	4.4968	10.8064
10/11/2012	1,010.1	117.8	4,519.0	75.7592	-	-	4,232.1400	118.4040	23.8656	29.3216	8.8880	9.0200	4.9940	2.0460	-	4.2812	10.2784
10/12/2012	1,010.0	117.9	4,521.5	77.7524	-	-	4,230.9520	118.1928	24.5784	29.9024	9.2224	9.3060	5.1480	2.0460	-	4.2196	10.1376
10/13/2012	1,010.5	117.9	4,524.5	77.3344	-	-	4,228.7916	122.0736	24.8820	30.4480	9.2048	9.4600	5.1920	2.1120	-	4.4044	10.6304
10/14/2012	1,010.4	117.9	4,523.4	76.7184	-	-	4,231.5812	118.7032	24.4728	30.6064	9.1520	9.4600	5.1700	2.1340	-	4.5276	10.9120
10/15/2012	1,010.4	118.0	4,525.9	77.2156	-	-	4,233.0948	115.1480	24.7104	32.1024	9.3808	9.6800	5.4560	2.3320	-	4.9280	11.8624
10/16/2012	1,011.2	118.0	4,528.5	75.9220	-	-	4,230.6396	121.1584	25.2780	32.0320	9.3280	9.8780	5.4120	2.2880	-	4.8664	11.7216
10/17/2012	1,010.1	117.9	4,522.3	77.0528	-	-	4,232.6548	116.4240	24.1296	30.5360	8.9232	9.3500	5.1700	2.1120	-	4.6816	11.2640
10/18/2012	1,011.1	117.9	4,526.5	75.1828	-	-	4,235.6292	114.7168	25.7664	31.9616	9.4512	9.8780	5.4340	2.2880	-	4.7432	11.4400
10/19/2012	1,011.4	117.9	4,529.2	74.6416	-	-	4,237.0240	113.9336	25.3440	33.1408	9.7328	9.9660	5.6320	2.2660	-	5.1436	12.3552
10/20/2012	1,011.6	118.0	4,532.1	75.2180	-	-	4,233.6580	117.8848	25.8192	33.7216	9.9088	10.1860	5.7420	2.3540	-	5.1744	12.4608
10/21/2012	1,011.1	118.0	4,528.0	76.8240	-	-	4,231.0312	121.2376	24.9876	31.5040	9.5040	9.5700	5.5000	2.2440	-	4.5892	11.0528
10/22/2012	1,012.7	118.2	4,543.9	77.6600	-	-	4,221.8836	131.1728	29.5812	35.6400	10.7360	11.0880	6.0280	2.6180	-	5.1436	12.3552
10/23/2012	1,014.0	118.4	4,557.0	77.8008	-	-	4,217.1800	135.8280	33.2508	39.4768	11.6512	12.1880	6.4460	3.0360	-	5.9136	14.2208
10/24/2012	1,011.3	117.9	4,527.5	75.0552	-	-	4,234.3752	118.1840	24.7764	31.8736	9.4512	9.6140	5.3680	2.2440	-	4.8664	11.7216
10/25/2012	1,012.1	117.9	4,531.2	74.0212	-	-	4,234.7976	119.2840	26.9280	32.5072	9.8560	10.2960	5.5000	2.3540	-	4.5892	11.0176
10/26/2012	1,014.2	118.2	4,553.2	75.5832	-	-	4,225.4476	128.2688	33.3168	38.5792	11.1232	12.9360	6.0280	3.1020	-	5.5132	13.3056
10/27/2012	1,010.4	118.0	4,526.0	76.6876	-	-	4,238.9072	107.8176	24.4596	32.9472	9.5392	9.6140	5.5000	2.2660	-	5.3592	12.8832
10/28/2012	1,010.3	118.0	4,527.3	77.7216	-	-	4,238.7444	106.5504	24.7896	33.5632	9.8032	10.0100	5.5440	2.2000	-	5.3900	12.9536
10/29/2012	1,010.5	118.0	4,526.0	76.3840	-	-	4,236.3904	111.2936	24.8292	32.6304	9.6096	9.7680	5.4780	2.2000	-	5.1128	12.2848
10/30/2012	1,019.4	118.9	4,600.4	78.6852	-	-	4,193.3408	162.2896	52.5360	48.7344	14.8720	17.0720	7.5680	3.5420	-	6.3756	15.3472
10/31/2012	1,015.3	118.7	4,575.1	83.0280	-	-	4,205.7092	144.0824	40.7088	43.3488	13.6224	13.4860	6.8860	2.8600	-	6.2832	15.1008
11/1/2012	1,013.3	118.5	4,559.0	79.1032	-	-	4,223.8592	123.6048	31.0596	42.2928	11.4400	11.8360	6.5120	3.3220	-	7.6076	18.3392
11/2/2012	1,018.0	119.0	4,600.4	80.7752	-	-	4,201.9076	149.3888	43.9428	52.6416	15.1888	16.3240	8.2500	4.1140	-	8.1620	19.6768
11/3/2012	1,020.8	119.4	4,628.4	81.6728	-	-	4,183.3572	170.1392	51.4140	59.9104	16.7904	18.6560	9.2620	5.1260	-	9.3940	22.6336
11/4/2012	1,021.0	119.5	4,630.5	81.7564	-	-	4,182.1824	171.8728	51.3216	60.3856	16.6848	18.4580	9.2400	5.0600	-	9.8560	23.7248
11/5/2012	1,021.0	119.5	4,631.2	81.8268	-	-	4,182.3276	171.2920	51.2028	60.8256	16.7552	18.5460	9.3280	5.0160	-	10.0100	24.0768
11/6/2012	1,020.8	119.4	4,628.6	81.7520	-	-	4,182.7280	171.5208	51.0576	59.6992	16.6848	18.2820	9.2180	4.9280	-	9.6096	23.1616
11/7/2012	1,021.0	119.5	4,631.2	81.7960	-	-	4,182.4508	171.7056	51.0576	60.5616	16.5616	18.2160	9.2840	4.9500	-	10.1640	24.4640
11/8/2012	1,021.0	119.5	4,630.9	81.6860	-	-	4,182.3584	172.0752	51.0576	60.4208	16.6320	18.3040	9.1080	4.9720	-	10.0716	24.2528
11/9/2012	1,021.2	119.5	4,633.1	81.6376	-	-	4,182.5872	171.5824	51.3216	61.2656	16.7376	18.5460	9.3060	4.9060	-	10.3180	24.8512
11/10/2012	1,009.2	118.1	4,525.4	82.0292	-	-	4,224.1144	119.9704	24.8952	31.4160	9.1520	9.4380	5.1700	2.0900	-	5.0204	12.0736
11/11/2012	1,010.2	118.1	4,529.5	78.9272	-	-	4,228.6816	117.4184	25.3176	33.3872	9.6624	9.9000	5.4340	2.2440	-	5.4516	13.0944
11/12/2012	1,010.2	118.1	4,529.4	79.4112	-	-	4,228.6464	117.4272	25.2516	33.1408	9.4688	9.7460	5.5000	2.2660	-	5.4516	13.0944
11/13/2012	1,010.0	118.1	4,530.3	80.0052	-	-	4,232.7208	111.1176	25.3572	34.1264	9.7680	9.9880	5.5880	2.3100	-	5.6672	13.6224
11/14/2012	1,027.9	119.7	4,672.2	79.9568	-	-	4,157.1948	211.9656	70.6596	65.0496	19.6416	21.8020	9.5480	4.9280	-	9.2400	22.2112
11/15/2012	1,014.8	118.5	4,567.3	79.7236	-	-	4,216.5376	133.4432	37.1844	42.6096	12.6896	13.2440	6.7760	3.0140	-	6.4680	15.5936
11/16/2012	1,012.8	118.4	4,551.6	80.1988	-	-	4,223.9384	124.4496	31.4028	38.6672	11.1760	11.4620	6.3360	2.7720	-	6.2216	14.9600
11/17/2012	1,011.0	118.2	4,537.8	80.2780	-	-	4,231.2820	113.8808	27.3636	35.8688	10.4192	10.5600	5.8740	2.4640	-	5.8212	14.0096
11/18/2012	1,011.0	118.2	4,537.4	80.2340	-	-	4,231.3612	113.8720	27.4164	35.7280	10.4368	10.6260	5.8740	2.4640	-	5.6980	13.7280
11/19/2012	1,010.3	118.2	4,533.7	80.2648	-	-	4,236.8040	106.1280	25.6344	35.6576	9.9264	10.6040	5.9180	2.4420	-	5.9444	14.3264

TRPP
Tenaska Roans Prairie Generating Station
Grimes County, Texas
Historical Fuel Data and Statistical Analysis

Gas Day Date	Heating Value	CO_2 Intensity	Total CO_2	CO_2 Cont	O_2 Cont	N_2 Cont	Methane Cont	Ethane Cont	Propane Cont	I Butane Cont	N Butane Cont	I Pentane Cont	N Pentane Cont	Neo Pentane Cont	N Hexane Cont	Heptane Cont	Octane Cont
Stoichiometry (mol CO_2 / Mol component)				1	0	0	1	2	3	4	4	5	5	5	6	7	8
11/20/2012	1,009.1	118.2	4,528.5	83.5428	-	-	4,230.4064	110.5544	24.8556	33.3168	9.5040	9.7900	5.4120	2.3320	-	5.5132	13.2704
11/21/2012	1,009.2	118.1	4,526.5	82.0644	-	-	4,228.9368	113.9072	24.3408	32.4368	9.1344	9.4380	5.3020	2.1340	-	5.5132	13.3056
11/22/2012	1,008.5	118.0	4,519.8	81.0216	-	-	4,231.5724	110.2112	22.8888	31.1696	8.8176	9.1300	5.1480	2.1340	-	5.2052	12.4960
11/23/2012	1,008.5	118.0	4,518.2	80.9688	-	-	4,233.2708	108.3984	23.1924	30.5184	8.8000	9.0420	5.0160	2.0240	-	4.9896	12.0032
11/24/2012	1,008.7	118.0	4,519.4	80.3660	-	-	4,232.5932	110.1848	23.1528	30.7824	8.8352	9.1080	5.0820	2.0240	-	5.0512	12.1792
11/25/2012	1,008.5	117.9	4,516.1	79.9172	-	-	4,233.3368	110.0000	22.5456	29.5680	8.5008	8.7120	4.7960	1.8920	-	4.9280	11.8624
11/26/2012	1,008.4	117.9	4,515.7	80.5992	-	-	4,233.6800	109.3576	22.7568	29.3040	8.5888	8.8660	4.8620	1.9140	-	4.6200	11.1232
11/27/2012	1,009.6	118.0	4,522.6	78.2804	-	-	4,231.9288	113.8808	24.0108	31.4864	9.1168	9.3940	5.2800	2.1340	-	5.0204	12.1088
11/28/2012	1,009.6	118.0	4,522.6	78.2804	-	-	4,231.9288	113.8808	24.0108	31.4864	9.1168	9.3940	5.2800	2.1340	-	5.0204	12.1088

Max	120.6
Avg	118.2
STD DEV	0.45317431
AVG + 1	118.63
AVG + 2	119.08
AVG + 3	119.54
Rounded	120.00

TRPP
Tenaska Roans Prairie Generating Station
Grimes County, Texas
Historical Fuel Data and Statistical Analysis

Gas Day Date	Heating Value	Gravity	Wobbe	Co2 Cont	O2 Cont	N2 Cont	Methane Cont	Ethane Cont	Propane Cont	C4+ Content	I Butane Cont	N Butane Cont	I Pentane Cont	N Pentane Cont	Neo Pentane Cont	N Hexane Cont	C6 Plus Cont	Heptane Cont	Octane Cont	Press Base
	(Btu/SCF, HHV)	(dimensionless)	(Btu/SCF, HHV)	(mol%)	(mol%)	(mol%)	(mol%)	(mol%)	(mol%)	(mol%)	(mol%)	(mol%)	(mol%)	(mol%)	(mol%)	(mol%)	(mol%)	(mol%)	(mol%)	(psia)
Min	1,006.2	0.5790	1,317.8	1.5900	-	0.1461	94.3288	0.7031	0.1252	0.1137	0.0399	0.0315	0.0009	0.0081	-	0.0107	0.0226	0.0080	0.0039	14.7
Average	1,012.0	0.5854	1,322.8	1.7669	-	0.3261	96.1763	1.3164	0.2222	0.2084	0.0620	0.0514	0.0279	0.0126	-	0.0176	0.0370	0.0131	0.0064	14.7
Max	1,030.1	0.6010	1,330.4	2.1667	-	0.4397	97.1713	2.4087	0.6112	0.5085	0.1405	0.1402	0.0620	0.0332	-	0.0427	0.0899	0.0318	0.0155	14.7
1/1/2012	1,010.7	0.5823	1,324.5	1.7123	-	0.2262	96.6662	1.0287	0.1816	0.2043	0.0567	0.0464	0.0305	0.0111	-	0.0192	0.0404	0.0143	0.0069	14.730
1/2/2012	1,015.4	0.5832	1,329.6	1.6147	-	0.1538	96.3992	1.4898	0.1682	0.1913	0.0544	0.0430	0.0262	0.0122	-	0.0179	0.0376	0.0133	0.0065	14.730
1/3/2012	1,009.4	0.5813	1,323.9	1.7298	-	0.1584	96.8983	0.8837	0.1595	0.1890	0.0517	0.0406	0.0245	0.0103	-	0.0199	0.0420	0.0148	0.0072	14.730
1/4/2012	1,009.3	0.5809	1,324.2	1.7155	-	0.1534	96.9553	0.8503	0.1565	0.1878	0.0513	0.0401	0.0243	0.0107	-	0.0198	0.0416	0.0147	0.0071	14.730
1/5/2012	1,009.8	0.5818	1,323.9	1.7182	-	0.1965	96.7994	0.9451	0.1667	0.1923	0.0532	0.0420	0.0259	0.0116	-	0.0192	0.0404	0.0143	0.0069	14.730
1/6/2012	1,009.5	0.5830	1,322.1	1.7940	-	0.2092	96.6390	1.0102	0.1721	0.1941	0.0543	0.0417	0.0251	0.0114	-	0.0198	0.0418	0.0148	0.0072	14.730
1/7/2012	1,011.6	0.5847	1,322.9	1.7864	-	0.2621	96.3654	1.1840	0.1994	0.2240	0.0626	0.0488	0.0286	0.0135	-	0.0227	0.0478	0.0169	0.0082	14.730
1/8/2012	1,011.9	0.5849	1,323.1	1.7765	-	0.2760	96.3324	1.2071	0.2026	0.2266	0.0633	0.0499	0.0291	0.0135	-	0.0228	0.0480	0.0170	0.0083	14.730
1/9/2012	1,011.4	0.5847	1,322.7	1.7674	-	0.2962	96.3382	1.2042	0.1952	0.2202	0.0609	0.0475	0.0282	0.0132	-	0.0227	0.0477	0.0169	0.0082	14.730
1/10/2012	1,012.2	0.5857	1,322.6	1.8188	-	0.2684	96.2522	1.2354	0.2093	0.2387	0.0670	0.0511	0.0307	0.0142	-	0.0244	0.0513	0.0181	0.0088	14.730
1/11/2012	1,008.6	0.5820	1,322.1	1.7593	-	0.2307	96.7331	0.9559	0.1608	0.1765	0.0503	0.0391	0.0231	0.0102	-	0.0173	0.0365	0.0129	0.0063	14.730
1/12/2012	1,011.5	0.5847	1,322.8	1.8090	-	0.2340	96.4186	1.1281	0.1995	0.2337	0.0643	0.0505	0.0297	0.0138	-	0.0243	0.0511	0.0181	0.0088	14.730
1/13/2012	1,009.4	0.5848	1,320.0	1.9173	-	0.1972	96.4628	1.0426	0.1858	0.2143	0.0617	0.0458	0.0282	0.0124	-	0.0213	0.0449	0.0159	0.0077	14.730
1/14/2012	1,008.2	0.5853	1,317.8	2.0159	-	0.1679	96.4326	1.0153	0.1786	0.2092	0.0623	0.0435	0.0274	0.0111	-	0.0209	0.0440	0.0155	0.0076	14.730
1/15/2012	1,010.0	0.5862	1,319.2	1.9844	-	0.1919	96.3120	1.1004	0.1982	0.2356	0.0679	0.0492	0.0303	0.0131	-	0.0242	0.0509	0.0180	0.0088	14.730
1/16/2012	1,011.9	0.5868	1,321.0	1.9178	-	0.2431	96.1819	1.2158	0.2077	0.2607	0.0692	0.0535	0.0323	0.0159	-	0.0289	0.0609	0.0215	0.0105	14.730
1/17/2012	1,012.7	0.5871	1,321.7	1.8863	-	0.2648	96.1279	1.2654	0.2128	0.2710	0.0713	0.0555	0.0332	0.0171	-	0.0302	0.0637	0.0225	0.0110	14.730
1/18/2012	1,009.8	0.5848	1,320.5	1.8971	-	0.2093	96.4510	1.0595	0.1825	0.2229	0.0611	0.0463	0.0282	0.0133	-	0.0238	0.0502	0.0177	0.0086	14.730
1/19/2012	1,009.9	0.5828	1,322.9	1.7891	-	0.1770	96.7286	0.9458	0.1705	0.2106	0.0564	0.0437	0.0261	0.0126	-	0.0231	0.0487	0.0172	0.0084	14.730
1/20/2012	1,009.5	0.5812	1,324.2	1.7184	-	0.1602	96.9173	0.8676	0.1623	0.1930	0.0525	0.0416	0.0255	0.0115	-	0.0199	0.0420	0.0148	0.0072	14.730
1/21/2012	1,010.0	0.5831	1,322.7	1.7603	-	0.2416	96.5889	1.0530	0.1785	0.1963	0.0550	0.0433	0.0261	0.0116	-	0.0194	0.0409	0.0145	0.0070	14.730
1/22/2012	1,009.8	0.5832	1,322.3	1.7586	-	0.2659	96.5557	1.0716	0.1732	0.1938	0.0533	0.0421	0.0255	0.0110	-	0.0199	0.0420	0.0148	0.0072	14.730
1/23/2012	1,009.2	0.5830	1,321.7	1.7766	-	0.2589	96.5709	1.0555	0.1723	0.1820	0.0530	0.0411	0.0239	0.0105	-	0.0172	0.0363	0.0128	0.0062	14.730
1/24/2012	1,008.9	0.5835	1,320.8	1.8375	-	0.2275	96.5724	1.0182	0.1699	0.1930	0.0544	0.0413	0.0251	0.0113	-	0.0196	0.0413	0.0146	0.0071	14.730
1/25/2012	1,008.1	0.5800	1,323.7	1.7015	-	0.1547	97.0614	0.7922	0.1410	0.1652	0.0454	0.0358	0.0218	0.0097	-	0.0169	0.0356	0.0126	0.0061	14.730
1/26/2012	1,009.3	0.5825	1,322.4	1.7953	-	0.1787	96.7473	0.9302	0.1699	0.1974	0.0551	0.0428	0.0261	0.0116	-	0.0199	0.0419	0.0148	0.0072	14.730
1/27/2012	1,009.2	0.5826	1,322.2	1.8044	-	0.1724	96.7538	0.9209	0.1689	0.1994	0.0542	0.0426	0.0257	0.0116	-	0.0210	0.0443	0.0157	0.0076	14.730
1/28/2012	1,008.5	0.5813	1,322.7	1.7598	-	0.1622	96.9073	0.8552	0.1548	0.1780	0.0495	0.0387	0.0231	0.0105	-	0.0181	0.0381	0.0135	0.0066	14.730
1/29/2012	1,006.2	0.5795	1,321.8	1.7498	-	0.1461	97.1457	0.7031	0.1252	0.1448	0.0399	0.0315	0.0183	0.0081	-	0.0151	0.0319	0.0113	0.0055	14.730
1/30/2012	1,008.1	0.5790	1,324.8	1.6328	-	0.1615	97.1713	0.7630	0.1325	0.1545	0.0425	0.0330	0.0196	0.0084	-	0.0164	0.0346	0.0122	0.0059	14.730
1/31/2012	1,011.4	0.5818	1,326.0	1.6448	-	0.2131	96.7570	1.0240	0.1798	0.1998	0.0564	0.0444	0.0266	0.0115	-	0.0196	0.0413	0.0146	0.0071	14.730
2/1/2012	1,011.0	0.5824	1,324.8	1.6739	-	0.2472	96.6461	1.0733	0.1818	0.1949	0.0561	0.0447	0.0259	0.0111	-	0.0184	0.0387	0.0137	0.0066	14.730
2/2/2012	1,011.2	0.5828	1,324.6	1.6663	-	0.2867	96.5401	1.1423	0.1879	0.1929	0.0570	0.0448	0.0259	0.0111	-	0.0174	0.0367	0.0130	0.0063	14.730
2/3/2012	1,011.4	0.5828	1,324.8	1.6772	-	0.2531	96.5930	1.1045	0.1895	0.2006	0.0581	0.0453	0.0262	0.0117	-	0.0191	0.0402	0.0142	0.0069	14.730
2/4/2012	1,012.0	0.5810	1,327.7	1.5900	-	0.1828	96.8747	0.9885	0.1812	0.2006	0.0574	0.0450	0.0270	0.0119	-	0.0191	0.0402	0.0142	0.0069	14.730
2/5/2012	1,011.5	0.5811	1,326.9	1.6234	-	0.1749	96.8744	0.9674	0.1775	0.2011	0.0565	0.0444	0.0270	0.0120	-	0.0197	0.0415	0.0147	0.0071	14.730
2/6/2012	1,010.8	0.5811	1,326.0	1.6485	-	0.1734	96.8925	0.9369	0.1722	0.1946	0.0549	0.0431	0.0259	0.0114	-	0.0191	0.0402	0.0142	0.0069	14.730
2/7/2012	1,010.4	0.5811	1,325.5	1.6715	-	0.1643	96.9153	0.9056	0.1680	0.1941	0.0537	0.0424	0.0253	0.0112	-	0.0198	0.0417	0.0147	0.0072	14.730
2/8/2012	1,009.2	0.5802	1,324.9	1.6706	-	0.1537	97.0383	0.8237	0.1526	0.1785	0.0489	0.0385	0.0235	0.0104	-	0.0184	0.0388	0.0137	0.0067	14.730
2/9/2012	1,010.1	0.5822	1,323.8	1.6747	-	0.2821	96.6421	1.0674	0.1675	0.1836	0.0517	0.0400	0.0241	0.0106	-	0.0184	0.0388	0.0137	0.0067	14.730
2/10/2012	1,009.1	0.5808	1,324.1	1.6662	-	0.2185	96.8871	0.9227	0.1524	0.1702	0.0471	0.0364	0.0218	0.0095	-	0.0178	0.0376	0.0133	0.0065	14.730
2/11/2012	1,011.6	0.5831	1,324.8	1.7448	-	0.1741	96.6501	1.0343	0.1961	0.2207	0.0633	0.0488	0.0295	0.0129	-	0.0213	0.0449	0.0159	0.0077	14.730
2/12/2012	1,011.1	0.5843	1,322.7	1.8309	-	0.1803	96.5170	1.0672	0.1996	0.2252	0.0650	0.0494	0.0308	0.0133	-	0.0215	0.0452	0.0160	0.0078	14.730
2/13/2012	1,011.3	0.5826	1,324.9	1.7209	-	0.1738	96.7269	0.9964	0.1870	0.2151	0.0601	0.0472	0.0287	0.0124	-	0.0215	0.0452	0.0160	0.0078	14.730
2/14/2012	1,011.8	0.5831	1,325.0	1.6820	-	0.2540	96.5564	1.1264	0.1914	0.2086	0.0597	0.0464	0.0279	0.0121	-	0.0201	0.0424	0.0150	0.0073	14.730
2/15/2012	1,011.9	0.5833	1,324.9	1.6873	-	0.2622	96.5097	1.1558	0.1943	0.2095	0.0600	0.0468	0.0276	0.0123	-	0.0202	0.0426	0.0151	0.0073	14.730
2/16/2012	1,012.5	0.5847	1,324.1	1.7528	-	0.2556	96.3827	1.1925	0.2019	0.2388	0.0641	0.0502	0.0304	0.0143	-	0.0257	0.0541	0.0191	0.0093	14.730
2/17/2012	1,011.8	0.5836	1,324.5	1.7260	-	0.2325	96.5377	1.1135	0.1915	0.2207	0.0604	0.0468	0.0288	0.0126	-	0.0232	0.0489	0.0173	0.0084	14.730
2/18/2012	1,010.7	0.5834	1,323.2	1.7622	-	0.2282	96.5633	1.0744	0.1821	0.2104	0.0576	0.0449	0.0279	0.0125	-	0.0217	0.0458	0.0162	0.0079	14.730
2/19/2012	1,010.9	0.5837	1,323.2	1.7406	-	0.2723	96.4758	1.1414	0.1847	0.2051	0.0566	0.0440	0.0273	0.0122	-	0.0209	0.0441	0.0156	0.0076	14.730
2/20/2012	1,011.2	0.5837	1,323.6	1.7355	-	0.2649	96.4875	1.1358	0.1874	0.2093	0.0573	0.0452	0.0280	0.0121	-	0.0215	0.0452	0.0160	0.0078	14.730
2/21/2012	1,011.4	0.5835	1,324.0	1.7181	-	0.2574	96.5136	1.1341	0.1880	0.2091	0.0576	0.0449	0.0278	0.0120	-	0.0215	0.0453	0.0160	0.0078	14.730
2/22/2012	1,010.3	0.5831	1,323.1	1.7077	-	0.3061	96.4917	1.1525	0.1756	0.1836	0.0519	0.0403	0.0244	0.0104	-	0.0182	0.0384	0.0136	0.0066	14.730
2/23/2012	1,011.1	0.5835	1,323.7	1.6797	-	0.3385	96.3900	1.2381	0.1849	0.1851	0.0541	0.0423	0.0243	0.0103	-	0.0174	0.0367	0.0130	0.0063	14.730
2/24/2012	1,012.3	0.5843	1,324.3	1.6941	-	0.3209	96.3275	1.2629	0.2028	0.2115	0.0599	0.0467	0.0277	0.0123	-	0.0209	0.0440	0.0155	0.0076	14.730
2/25/2012	1,012.0	0.5836	1,324.7	1.6641	-	0.3173	96.3998	1.2409	0.1941	0.2019	0.0578	0.0453	0.0270	0.0118	-	0.0193	0.0407	0.0144	0.0070	14.730
2/26/2012	1,012.1	0.5833	1,325.2	1.6331	-	0.3297	96.4260	1.2405	0.1916	0.1971	0.0564	0.0445	0.0259	0.0113	-	0.0190	0.0400	0.0141	0.0069	14.730
2/27/2012	1,012.0	0.5832	1,325.2	1.6328	-	0.3275	96.4390	1.2321	0.1897	0.1972	0.0559	0.0442	0.0261	0.0113	-	0.0192	0.0405	0.0143	0.0070	14.730
2/28/2012	1,014.2	0.5848	1,326.2	1.6501	-	0.3213	96.2395	1.3474	0.2329	0.2288	0.0668	0.0534	0.0298	0.0126	-	0.0213	0.0449	0.0159	0.0077	14.730
2/29/2012	1,012.9	0.5845	1,324.9	1.7117	-	0.2732	96.3561	1.2398	0.2171	0.2223	0.0640	0.0504	0.0291	0.0124	-	0.0214	0.0450	0.0159	0.0077	14.730
3/1/2012	1,011.6	0.5835	1,324.3	1.6974	-	0.2773	96.4794	1.1665	0.1940	0.2040	0.0583	0.0461	0.0270	0.0114	-	0.0197	0.0415	0.0147	0.0071	14.730
3/2/2012	1,013.4	0.5857	1,324.2	1.7493	-	0.2983	96.1775	1.3247	0.2376	0.2321	0.0681	0.0551	0.0304	0.0135	-	0.0209	0.0441	0.0156	0.0076	14.730
3/3/2012	1,011.9	0.5848	1,323.2	1.7371	-	0.3233	96.2617	1.2804	0.2083	0.2072	0.0601	0.0479	0.0276	0.0122	-	0.0191	0.0403	0.0142	0.0069	14.730

Gas Day Date	Heating Value	Gravity	Wobbe	Co2 Cont	O2 Cont	N2 Cont	Methane Cont	Ethane Cont	Propane Cont	C4+ Content	I Butane Cont	N Butane Cont	I Pentane Cont	N Pentane Cont	Neo Pentane Cont	N Hexane Cont	C6 Plus Cont	Heptane Cont	Octane Cont	Press Base
	(Btu/SCF, HHV)	(dimensionless)	(Btu/SCF, HHV)	(mol%)	(mol%)	(mol%)	(mol%)	(mol%)	(mol%)	(mol%)	(mol%)	(mol%)	(mol%)	(mol%)	(mol%)	(mol%)	(mol%)	(mol%)	(mol%)	(psia)
Min	1,006.2	0.5790	1,317.8	1.5900	-	0.1461	94.3288	0.7031	0.1252	0.1137	0.0399	0.0315	0.0009	0.0081	-	0.0107	0.0226	0.0080	0.0039	14.7
Average	1,012.0	0.5854	1,322.8	1.7669	-	0.3261	96.1763	1.3164	0.2222	0.2084	0.0620	0.0514	0.0279	0.0126	-	0.0176	0.0370	0.0131	0.0064	14.7
Max	1,030.1	0.6010	1,330.4	2.1667	-	0.4397	97.1713	2.4087	0.6112	0.5085	0.1405	0.1402	0.0620	0.0332	-	0.0427	0.0899	0.0318	0.0155	14.7
3/4/2012	1,011.3	0.5839	1,323.5	1.6945	-	0.3402	96.3465	1.2543	0.1896	0.1922	0.0549	0.0439	0.0254	0.0111	-	0.0183	0.0386	0.0136	0.0066	14.730
3/5/2012	1,011.9	0.5842	1,323.9	1.7004	-	0.3284	96.3098	1.2795	0.1999	0.1995	0.0581	0.0457	0.0263	0.0114	-	0.0187	0.0393	0.0139	0.0068	14.730
3/6/2012	1,014.3	0.5882	1,322.5	1.8498	-	0.3309	95.8623	1.4460	0.2712	0.2613	0.0770	0.0625	0.0341	0.0157	-	0.0232	0.0488	0.0172	0.0084	14.730
3/7/2012	1,016.4	0.5891	1,324.3	1.7949	-	0.3656	95.7093	1.5815	0.2956	0.2793	0.0770	0.0653	0.0329	0.0169	-	0.0281	0.0591	0.0209	0.0102	14.730
3/8/2012	1,017.6	0.5900	1,324.8	1.7814	-	0.4050	95.5119	1.7295	0.3175	0.2788	0.0803	0.0678	0.0345	0.0164	-	0.0257	0.0541	0.0191	0.0093	14.730
3/9/2012	1,013.2	0.5864	1,323.1	1.7236	-	0.4199	95.9486	1.4769	0.2326	0.2172	0.0633	0.0512	0.0281	0.0127	-	0.0199	0.0420	0.0148	0.0072	14.730
3/10/2012	1,013.5	0.5862	1,323.7	1.7161	-	0.3898	96.0108	1.4439	0.2341	0.2243	0.0644	0.0548	0.0295	0.0134	-	0.0200	0.0422	0.0149	0.0073	14.730
3/11/2012	1,011.6	0.5848	1,322.8	1.7108	-	0.3876	96.1794	1.3438	0.1997	0.1966	0.0562	0.0453	0.0255	0.0111	-	0.0188	0.0397	0.0140	0.0068	14.730
3/12/2012	1,014.7	0.5874	1,323.9	1.7426	-	0.3906	95.8450	1.5436	0.2616	0.2370	0.0694	0.0571	0.0298	0.0136	-	0.0216	0.0455	0.0161	0.0078	14.730
3/13/2012	1,018.9	0.5913	1,325.0	1.7936	-	0.4327	95.3252	1.8243	0.3452	0.3035	0.0890	0.0764	0.0381	0.0187	-	0.0262	0.0551	0.0195	0.0095	14.730
3/14/2012	1,018.0	0.5909	1,324.3	1.7978	-	0.4397	95.4053	1.7605	0.3172	0.3050	0.0873	0.0735	0.0389	0.0192	-	0.0277	0.0584	0.0206	0.0100	14.730
3/15/2012	1,020.1	0.5920	1,325.8	1.7956	-	0.4247	95.2741	1.8447	0.3594	0.3294	0.0948	0.0808	0.0402	0.0205	-	0.0300	0.0631	0.0223	0.0108	14.730
3/16/2012	1,020.3	0.5923	1,325.7	1.8184	-	0.4089	95.2201	1.8825	0.3756	0.3201	0.0955	0.0817	0.0389	0.0184	-	0.0276	0.0580	0.0205	0.0100	14.730
3/17/2012	1,021.0	0.5918	1,327.2	1.7633	-	0.3949	95.3142	1.8467	0.3703	0.3370	0.0977	0.0868	0.0426	0.0216	-	0.0284	0.0599	0.0212	0.0103	14.730
3/18/2012	1,020.6	0.5916	1,326.9	1.7684	-	0.4000	95.3328	1.8275	0.3671	0.3303	0.0968	0.0848	0.0418	0.0200	-	0.0280	0.0589	0.0208	0.0101	14.730
3/19/2012	1,021.1	0.5921	1,327.0	1.7686	-	0.4121	95.2669	1.8576	0.3792	0.3413	0.1007	0.0885	0.0446	0.0217	-	0.0276	0.0582	0.0206	0.0100	14.730
3/20/2012	1,018.0	0.5890	1,326.4	1.7147	-	0.3911	95.6643	1.6538	0.3121	0.2881	0.0841	0.0704	0.0370	0.0170	-	0.0256	0.0540	0.0191	0.0093	14.730
3/21/2012	1,014.1	0.5860	1,324.7	1.6875	-	0.3821	96.0340	1.4466	0.2399	0.2298	0.0662	0.0549	0.0297	0.0134	-	0.0211	0.0445	0.0157	0.0077	14.730
3/22/2012	1,017.7	0.5893	1,325.7	1.7404	-	0.3928	95.6476	1.6416	0.3089	0.2942	0.0840	0.0709	0.0369	0.0176	-	0.0273	0.0575	0.0203	0.0099	14.730
3/23/2012	1,018.1	0.5895	1,326.0	1.7388	-	0.3949	95.6286	1.6438	0.3150	0.3045	0.0867	0.0750	0.0388	0.0188	-	0.0274	0.0578	0.0204	0.0099	14.730
3/24/2012	1,014.3	0.5862	1,324.8	1.7043	-	0.3616	96.0420	1.4327	0.2436	0.2363	0.0680	0.0555	0.0309	0.0136	-	0.0220	0.0463	0.0164	0.0080	14.730
3/25/2012	1,013.2	0.5850	1,324.7	1.6841	-	0.3507	96.1881	1.3568	0.2236	0.2148	0.0626	0.0507	0.0287	0.0126	-	0.0194	0.0408	0.0144	0.0070	14.730
3/26/2012	1,013.9	0.5852	1,325.4	1.6642	-	0.3503	96.1742	1.3777	0.2286	0.2252	0.0642	0.0524	0.0290	0.0128	-	0.0215	0.0453	0.0160	0.0078	14.730
3/27/2012	1,012.1	0.5846	1,323.7	1.7288	-	0.3124	96.3043	1.2501	0.2108	0.2136	0.0596	0.0484	0.0273	0.0124	-	0.0212	0.0447	0.0158	0.0077	14.730
3/28/2012	1,012.4	0.5832	1,325.7	1.6308	-	0.3133	96.4340	1.2501	0.1904	0.1988	0.0570	0.0451	0.0269	0.0120	-	0.0186	0.0392	0.0139	0.0067	14.730
3/29/2012	1,012.8	0.5828	1,326.7	1.6132	-	0.2721	96.5503	1.1759	0.1970	0.2102	0.0601	0.0475	0.0282	0.0123	-	0.0200	0.0421	0.0149	0.0072	14.730
3/30/2012	1,012.6	0.5833	1,325.8	1.6318	-	0.2993	96.4531	1.2294	0.1979	0.2067	0.0596	0.0472	0.0278	0.0119	-	0.0194	0.0408	0.0144	0.0070	14.730
3/31/2012	1,012.7	0.5831	1,326.2	1.6144	-	0.3019	96.4754	1.2250	0.1977	0.2034	0.0593	0.0466	0.0275	0.0117	-	0.0188	0.0395	0.0140	0.0068	14.730
4/1/2012	1,012.1	0.5831	1,325.4	1.6271	-	0.3169	96.4520	1.2340	0.1931	0.1929	0.0576	0.0452	0.0261	0.0111	-	0.0170	0.0359	0.0127	0.0062	14.730
4/2/2012	1,011.5	0.5835	1,324.2	1.6674	-	0.3369	96.3743	1.2591	0.1911	0.1869	0.0556	0.0437	0.0251	0.0106	-	0.0167	0.0352	0.0124	0.0061	14.730
4/3/2012	1,016.9	0.5883	1,325.8	1.7535	-	0.3315	95.7907	1.5671	0.3099	0.2669	0.0815	0.0690	0.0349	0.0154	-	0.0213	0.0448	0.0158	0.0077	14.730
4/4/2012	1,019.2	0.5916	1,325.1	1.8442	-	0.3607	95.3911	1.7422	0.3644	0.3196	0.0980	0.0851	0.0426	0.0191	-	0.0241	0.0507	0.0179	0.0087	14.730
4/5/2012	1,012.4	0.5850	1,323.7	1.7043	-	0.3588	96.1935	1.3409	0.2120	0.2093	0.0602	0.0479	0.0272	0.0118	-	0.0200	0.0422	0.0149	0.0073	14.730
4/6/2012	1,011.2	0.5840	1,323.2	1.6878	-	0.3665	96.3009	1.2855	0.1866	0.1902	0.0543	0.0428	0.0253	0.0106	-	0.0184	0.0388	0.0137	0.0067	14.730
4/7/2012	1,011.3	0.5836	1,323.8	1.6613	-	0.3636	96.3481	1.2740	0.1839	0.1856	0.0539	0.0422	0.0245	0.0104	-	0.0176	0.0370	0.0131	0.0064	14.730
4/8/2012	1,011.6	0.5834	1,324.4	1.6445	-	0.3510	96.3764	1.2732	0.1837	0.1880	0.0541	0.0427	0.0250	0.0106	-	0.0179	0.0377	0.0133	0.0065	14.730
4/9/2012	1,011.4	0.5835	1,324.0	1.6517	-	0.3603	96.3636	1.2688	0.1844	0.1877	0.0544	0.0429	0.0252	0.0108	-	0.0175	0.0369	0.0130	0.0063	14.730
4/10/2012	1,011.6	0.5835	1,324.3	1.6507	-	0.3491	96.3725	1.2685	0.1856	0.1904	0.0554	0.0432	0.0256	0.0108	-	0.0178	0.0376	0.0133	0.0065	14.730
4/11/2012	1,011.2	0.5836	1,323.7	1.6818	-	0.3389	96.3682	1.2567	0.1848	0.1857	0.0545	0.0423	0.0250	0.0105	-	0.0172	0.0362	0.0128	0.0062	14.730
4/12/2012	1,010.6	0.5839	1,322.5	1.7307	-	0.3307	96.3491	1.2340	0.1841	0.1881	0.0549	0.0429	0.0251	0.0106	-	0.0176	0.0370	0.0131	0.0064	14.730
4/13/2012	1,010.3	0.5847	1,321.2	1.7826	-	0.3424	96.2361	1.2803	0.1888	0.1849	0.0551	0.0442	0.0250	0.0103	-	0.0162	0.0341	0.0121	0.0059	14.730
4/14/2012	1,010.0	0.5844	1,321.2	1.7855	-	0.3304	96.2922	1.2383	0.1850	0.1843	0.0547	0.0430	0.0248	0.0102	-	0.0166	0.0350	0.0124	0.0060	14.730
4/15/2012	1,010.0	0.5844	1,321.2	1.7850	-	0.3308	96.2905	1.2413	0.1850	0.1826	0.0546	0.0426	0.0245	0.0103	-	0.0163	0.0343	0.0121	0.0059	14.730
4/16/2012	1,009.2	0.5839	1,320.7	1.7854	-	0.3269	96.3180	1.2439	0.1854	0.1523	0.0537	0.0418	0.0012	0.0128	-	0.0138	0.0290	0.0102	0.0050	14.730
4/17/2012	1,009.2	0.5839	1,320.7	1.7854	-	0.3269	96.3182	1.2441	0.1854	0.1518	0.0537	0.0418	0.0009	0.0128	-	0.0137	0.0289	0.0102	0.0050	14.730
4/18/2012	1,009.2	0.5839	1,320.7	1.7854	-	0.3269	96.3182	1.2441	0.1854	0.1518	0.0537	0.0418	0.0009	0.0128	-	0.0137	0.0289	0.0102	0.0050	14.730
4/19/2012	1,011.7	0.5850	1,322.7	1.7656	-	0.3110	96.3244	1.2161	0.1862	0.2308	0.0503	0.0423	0.0171	0.0111	-	0.0354	0.0746	0.0263	0.0128	14.730
4/20/2012	1,010.0	0.5845	1,321.1	1.7759	-	0.3506	96.2762	1.2429	0.1857	0.1844	0.0550	0.0427	0.0248	0.0101	-	0.0167	0.0351	0.0124	0.0060	14.730
4/21/2012	1,010.2	0.5845	1,321.3	1.7834	-	0.3319	96.2861	1.2423	0.1856	0.1872	0.0549	0.0425	0.0247	0.0102	-	0.0177	0.0372	0.0131	0.0064	14.730
4/22/2012	1,010.9	0.5844	1,322.4	1.7454	-	0.3340	96.2967	1.2546	0.1941	0.1917	0.0565	0.0441	0.0260	0.0108	-	0.0175	0.0368	0.0130	0.0063	14.730
4/23/2012	1,030.1	0.5995	1,330.4	1.8809	-	0.3932	94.4507	2.2636	0.5539	0.4972	0.1399	0.1300	0.0620	0.0327	-	0.0427	0.0899	0.0318	0.0155	14.730
4/24/2012	1,017.8	0.5897	1,325.4	1.7746	-	0.3734	95.6003	1.6654	0.3204	0.2908	0.0847	0.0695	0.0366	0.0171	-	0.0267	0.0562	0.0199	0.0097	14.730
4/25/2012	1,017.7	0.5898	1,325.2	1.7855	-	0.3747	95.6270	1.6145	0.3170	0.3077	0.0874	0.0749	0.0384	0.0190	-	0.0283	0.0597	0.0211	0.0103	14.730
4/26/2012	1,017.5	0.5897	1,325.0	1.7778	-	0.3891	95.5969	1.6542	0.3168	0.2894	0.0839	0.0704	0.0359	0.0179	-	0.0262	0.0551	0.0195	0.0095	14.730
4/27/2012	1,015.2	0.5872	1,324.8	1.7182	-	0.3833	95.8798	1.5297	0.2615	0.2482	0.0727	0.0597	0.0318	0.0147	-	0.0223	0.0470	0.0166	0.0081	14.730
4/28/2012	1,012.9	0.5856	1,323.6	1.7155	-	0.3733	96.0768	1.4234	0.2189	0.2095	0.0615	0.0499	0.0281	0.0118	-	0.0187	0.0395	0.0140	0.0068	14.730
4/29/2012	1,010.9	0.5847	1,322.0	1.7230	-	0.3956	96.1814	1.3444	0.1868	0.1849	0.0537	0.0430	0.0249	0.0098	-	0.0172	0.0363	0.0128	0.0062	14.730
4/30/2012	1,010.6	0.5845	1,321.9	1.7205	-	0.4013	96.1944	1.3379	0.1825	0.1787	0.0522	0.0421	0.0238	0.0096	-	0.0164	0.0346	0.0122	0.0059	14.730
5/1/2012	1,010.9	0.5846	1,322.1	1.7271	-	0.3848	96.1967	1.3312	0.1903	0.1853	0.0547	0.0437	0.0253	0.0100	-	0.0166	0.0350	0.0124	0.0060	14.730
5/2/2012	1,011.3	0.5848	1,322.4	1.7299	-	0.3682	96.1976	1.3320	0.1955	0.1929	0.0566	0.0455	0.0262	0.0105	-	0.0174	0.0367	0.0130	0.0063	14.730
5/3/2012	1,011.6	0.5847	1,322.9	1.7231	-	0.3504	96.2369	1.3083	0.1986	0.2001	0.0584	0.0462	0.0265	0.0110	-	0.0187	0.0393	0.0139	0.0068	14.730
5/4/2012	1,011.5	0.5847	1,322.8	1.7172	-	0.3675	96.2217	1.3159	0.1967	0.1985	0.0575	0.0460	0.0260	0.0106	-	0.0188	0.0396	0.0140	0.0068	14.730
5/5/2012	1,010.8	0.5848	1,321.8	1.7512	-	0.3718	96.1969	1.3174	0.1903	0.1885	0.0551	0.0445	0.0253	0.0102	-	0.0172	0.0362	0.0128	0.0062	14.730
5/6/2012	1,011.1	0.5845	1,322.5	1.7085	-	0.3830	96.2238	1.3230	0.1892	0.1889	0.0547	0.0439	0.0251	0.0102	-	0.0177	0.0373	0.0132	0.0064	14.730
5/7/2012	1,011.8	0.5845	1,323.4	1.7124	-	0.3400	96.2363	1.3419	0.1931	0.1932	0.0554	0.0447	0.0259	0.0107	-	0.0182	0.0383	0.0135	0.0066	14.730
5/8/2012	1,011.5	0.5841	1,323.5	1.6825	-	0.3716	96.2614	1.3244	0.1890	0.1877	0.0539	0.0434	0.0253	0.0102	-	0.0177	0.0372	0.0131	0.0064	14.730
5/9/2012	1,012.0	0.5843	1,323.9	1.6713	-	0.3725	96.2599	1.3157	0.1982	0.1998	0.0573	0.0464	0.0270	0.0111	-	0.0187	0.0393	0.0139	0.0068	14.730
5/10/2012	1,011.7	0.5846	1,323.2	1.7002	-	0.3748	96.2131	1.3379	0.1950	0.1959	0.0565	0.0458	0.0266	0.0108	-	0.0181	0.0381	0.0135	0.0066	14.730

Gas Day Date	Heating Value	Gravity	Wobbe	Co2 Cont	O2 Cont	N2 Cont	Methane Cont	Ethane Cont	Propane Cont	C4+ Content	I Butane Cont	N Butane Cont	I Pentane Cont	N Pentane Cont	Neo Pentane Cont	N Hexane Cont	C6 Plus Cont	Heptane Cont	Octane Cont	Press Base
	(Btu/SCF, HHV)	(dimensionless)	(Btu/SCF, HHV)	(mol%)	(mol%)	(mol%)	(mol%)	(mol%)	(mol%)	(mol%)	(mol%)	(mol%)	(mol%)	(mol%)	(mol%)	(mol%)	(mol%)	(mol%)	(mol%)	(psia)
Min	1,006.2	0.5790	1,317.8	1.5900	-	0.1461	94.3288	0.7031	0.1252	0.1137	0.0399	0.0315	0.0009	0.0081	-	0.0107	0.0226	0.0080	0.0039	14.7
Average	1,012.0	0.5854	1,322.8	1.7669	-	0.3261	96.1763	1.3164	0.2222	0.2084	0.0620	0.0514	0.0279	0.0126	-	0.0176	0.0370	0.0131	0.0064	14.7
Max	1,030.1	0.6010	1,330.4	2.1667	-	0.4397	97.1713	2.4087	0.6112	0.5085	0.1405	0.1402	0.0620	0.0332	-	0.0427	0.0899	0.0318	0.0155	14.7
5/11/2012	1,011.0	0.5846	1,322.3	1.7210	-	0.3873	96.2054	1.3267	0.1857	0.1916	0.0534	0.0438	0.0251	0.0106	-	0.0189	0.0398	0.0141	0.0068	14.730
5/12/2012	1,011.8	0.5845	1,323.4	1.6890	-	0.3814	96.2059	1.3526	0.1931	0.1949	0.0556	0.0453	0.0265	0.0109	-	0.0182	0.0384	0.0136	0.0066	14.730
5/13/2012	1,011.5	0.5846	1,322.9	1.7037	-	0.3785	96.2076	1.3430	0.1908	0.1936	0.0547	0.0448	0.0257	0.0110	-	0.0185	0.0389	0.0138	0.0067	14.730
5/14/2012	1,011.7	0.5845	1,323.3	1.6932	-	0.3763	96.2131	1.3484	0.1935	0.1919	0.0554	0.0451	0.0257	0.0108	-	0.0177	0.0372	0.0131	0.0064	14.730
5/15/2012	1,012.8	0.5851	1,324.1	1.6940	-	0.3642	96.1364	1.4139	0.2065	0.2021	0.0583	0.0481	0.0268	0.0115	-	0.0185	0.0389	0.0137	0.0067	14.730
5/16/2012	1,012.7	0.5849	1,324.2	1.6900	-	0.3608	96.1588	1.4075	0.2001	0.2005	0.0569	0.0464	0.0269	0.0113	-	0.0190	0.0400	0.0141	0.0069	14.730
5/17/2012	1,012.5	0.5846	1,324.2	1.6914	-	0.3441	96.2261	1.3493	0.2041	0.2025	0.0587	0.0476	0.0269	0.0113	-	0.0187	0.0393	0.0139	0.0068	14.730
5/18/2012	1,012.3	0.5849	1,323.6	1.6969	-	0.3784	96.1419	1.4039	0.1992	0.1964	0.0567	0.0463	0.0265	0.0113	-	0.0179	0.0377	0.0133	0.0065	14.730
5/19/2012	1,012.1	0.5848	1,323.5	1.6920	-	0.3825	96.1542	1.3947	0.1982	0.1953	0.0558	0.0461	0.0262	0.0112	-	0.0180	0.0380	0.0134	0.0065	14.730
5/20/2012	1,011.8	0.5847	1,323.2	1.6956	-	0.3811	96.1834	1.3702	0.1948	0.1907	0.0553	0.0451	0.0262	0.0110	-	0.0171	0.0360	0.0127	0.0062	14.730
5/21/2012	1,011.9	0.5855	1,322.4	1.7417	-	0.3790	96.0783	1.4238	0.1980	0.1961	0.0560	0.0459	0.0263	0.0111	-	0.0183	0.0385	0.0136	0.0066	14.730
5/22/2012	1,013.2	0.5850	1,324.7	1.6881	-	0.3416	96.1801	1.3723	0.2223	0.2124	0.0612	0.0528	0.0288	0.0130	-	0.0182	0.0384	0.0136	0.0066	14.730
5/23/2012	1,013.3	0.5848	1,325.1	1.6698	-	0.3486	96.1935	1.3716	0.2226	0.2101	0.0622	0.0522	0.0283	0.0127	-	0.0176	0.0371	0.0131	0.0064	14.730
5/24/2012	1,012.1	0.5847	1,323.6	1.7101	-	0.3417	96.2234	1.3357	0.2066	0.1982	0.0584	0.0486	0.0264	0.0117	-	0.0171	0.0360	0.0127	0.0062	14.730
5/25/2012	1,012.3	0.5843	1,324.3	1.6912	-	0.3246	96.2867	1.3074	0.2062	0.1993	0.0592	0.0486	0.0280	0.0120	-	0.0166	0.0349	0.0123	0.0060	14.730
5/26/2012	1,011.4	0.5842	1,323.3	1.7118	-	0.3336	96.3060	1.2773	0.1940	0.1926	0.0568	0.0459	0.0268	0.0112	-	0.0167	0.0352	0.0124	0.0061	14.730
5/27/2012	1,011.5	0.5842	1,323.4	1.6916	-	0.3640	96.2549	1.3207	0.1952	0.1883	0.0561	0.0454	0.0261	0.0110	-	0.0160	0.0337	0.0119	0.0058	14.730
5/28/2012	1,011.0	0.5842	1,322.7	1.7077	-	0.3629	96.2656	1.3035	0.1919	0.1820	0.0553	0.0444	0.0254	0.0109	-	0.0148	0.0312	0.0110	0.0054	14.730
5/29/2012	1,010.8	0.5840	1,322.7	1.7099	-	0.3558	96.3011	1.2773	0.1884	0.1813	0.0543	0.0440	0.0254	0.0106	-	0.0151	0.0319	0.0113	0.0055	14.730
5/30/2012	1,012.3	0.5846	1,324.0	1.6890	-	0.3586	96.1980	1.3592	0.2142	0.1942	0.0595	0.0496	0.0275	0.0119	-	0.0147	0.0310	0.0110	0.0053	14.730
5/31/2012	1,011.7	0.5832	1,324.8	1.6529	-	0.3083	96.4430	1.2252	0.1969	0.1870	0.0565	0.0471	0.0262	0.0115	-	0.0147	0.0310	0.0110	0.0053	14.730
6/1/2012	1,011.4	0.5836	1,323.9	1.6731	-	0.3389	96.3607	1.2635	0.1945	0.1829	0.0556	0.0450	0.0254	0.0107	-	0.0149	0.0313	0.0111	0.0054	14.730
6/2/2012	1,016.2	0.5883	1,324.9	1.7552	-	0.3739	95.7523	1.5742	0.3011	0.2604	0.0777	0.0711	0.0354	0.0174	-	0.0189	0.0399	0.0141	0.0069	14.730
6/3/2012	1,013.3	0.5859	1,323.8	1.7212	-	0.3714	96.0308	1.4408	0.2421	0.2079	0.0650	0.0533	0.0287	0.0125	-	0.0156	0.0328	0.0116	0.0056	14.730
6/4/2012	1,013.2	0.5861	1,323.5	1.7302	-	0.3811	96.0113	1.4377	0.2416	0.2120	0.0648	0.0560	0.0298	0.0138	-	0.0153	0.0323	0.0114	0.0056	14.730
6/5/2012	1,013.7	0.5864	1,323.8	1.7353	-	0.3689	95.9773	1.4629	0.2558	0.2133	0.0667	0.0562	0.0294	0.0138	-	0.0152	0.0320	0.0113	0.0055	14.730
6/6/2012	1,010.4	0.5838	1,322.4	1.7226	-	0.3455	96.3239	1.2532	0.1931	0.1729	0.0544	0.0446	0.0248	0.0103	-	0.0125	0.0263	0.0093	0.0045	14.730
6/7/2012	1,010.9	0.5840	1,322.8	1.7304	-	0.3200	96.3342	1.2444	0.2010	0.1813	0.0577	0.0467	0.0263	0.0111	-	0.0127	0.0268	0.0095	0.0046	14.730
6/8/2012	1,010.3	0.5839	1,322.2	1.7231	-	0.3608	96.2956	1.2689	0.1910	0.1717	0.0541	0.0442	0.0247	0.0102	-	0.0124	0.0261	0.0092	0.0045	14.730
6/9/2012	1,010.3	0.5841	1,321.9	1.7341	-	0.3623	96.2756	1.2751	0.1919	0.1727	0.0536	0.0447	0.0245	0.0102	-	0.0128	0.0269	0.0095	0.0046	14.730
6/10/2012	1,010.4	0.5844	1,321.7	1.7481	-	0.3647	96.2257	1.2994	0.2005	0.1721	0.0552	0.0449	0.0249	0.0107	-	0.0117	0.0247	0.0087	0.0042	14.730
6/11/2012	1,010.7	0.5843	1,322.2	1.7328	-	0.3616	96.2374	1.3067	0.1988	0.1737	0.0549	0.0449	0.0250	0.0104	-	0.0124	0.0261	0.0092	0.0045	14.730
6/12/2012	1,010.8	0.5844	1,322.2	1.7494	-	0.3385	96.2556	1.2839	0.2036	0.1791	0.0578	0.0475	0.0268	0.0115	-	0.0114	0.0241	0.0085	0.0041	14.730
6/13/2012	1,010.7	0.5838	1,322.8	1.7341	-	0.3050	96.3866	1.2020	0.1998	0.1845	0.0574	0.0474	0.0265	0.0115	-	0.0134	0.0283	0.0100	0.0049	14.730
6/14/2012	1,012.0	0.5854	1,322.7	1.7485	-	0.3587	96.1191	1.3568	0.2341	0.1948	0.0622	0.0515	0.0277	0.0120	-	0.0133	0.0281	0.0099	0.0048	14.730
6/15/2012	1,010.0	0.5844	1,321.2	1.7837	-	0.3369	96.2728	1.2440	0.1969	0.1767	0.0557	0.0457	0.0259	0.0108	-	0.0124	0.0262	0.0093	0.0045	14.730
6/16/2012	1,016.7	0.5896	1,324.1	1.8272	-	0.3484	95.6321	1.5938	0.3389	0.2736	0.0865	0.0782	0.0388	0.0200	-	0.0161	0.0340	0.0120	0.0058	14.730
6/17/2012	1,021.5	0.5938	1,325.6	1.8863	-	0.3671	95.0169	1.9923	0.4436	0.3107	0.0997	0.0889	0.0412	0.0210	-	0.0193	0.0406	0.0143	0.0070	14.730
6/18/2012	1,028.7	0.5992	1,328.9	1.9371	-	0.3586	94.3465	2.3763	0.6004	0.4020	0.1308	0.1180	0.0517	0.0272	-	0.0239	0.0504	0.0178	0.0087	14.730
6/19/2012	1,023.7	0.5947	1,327.5	1.8693	-	0.3491	94.9813	1.9894	0.4618	0.3690	0.1147	0.1055	0.0493	0.0280	-	0.0230	0.0485	0.0171	0.0083	14.730
6/20/2012	1,027.0	0.6010	1,324.7	2.1667	-	0.2846	94.3288	2.1817	0.6112	0.4470	0.1405	0.1402	0.0614	0.0332	-	0.0231	0.0486	0.0172	0.0084	14.730
6/21/2012	1,017.8	0.5923	1,322.5	2.0095	-	0.2643	95.4091	1.6191	0.3997	0.3129	0.1004	0.0946	0.0446	0.0211	-	0.0168	0.0354	0.0125	0.0061	14.730
6/22/2012	1,018.9	0.5935	1,322.6	2.0401	-	0.2629	95.2697	1.6871	0.4230	0.3320	0.1074	0.1006	0.0480	0.0229	-	0.0171	0.0360	0.0127	0.0062	14.730
6/23/2012	1,014.0	0.5879	1,322.5	1.8693	-	0.2856	95.9138	1.4218	0.2841	0.2406	0.0734	0.0639	0.0326	0.0173	-	0.0172	0.0362	0.0128	0.0062	14.730
6/24/2012	1,014.4	0.5879	1,323.0	1.8565	-	0.2849	95.9015	1.4298	0.2939	0.2469	0.0774	0.0697	0.0349	0.0177	-	0.0152	0.0320	0.0113	0.0055	14.730
6/25/2012	1,016.0	0.5896	1,323.2	1.8960	-	0.2924	95.6536	1.5815	0.3343	0.2565	0.0825	0.0703	0.0356	0.0175	-	0.0163	0.0343	0.0121	0.0059	14.730
6/26/2012	1,015.0	0.5895	1,322.0	1.9433	-	0.2702	95.7174	1.4918	0.3317	0.2575	0.0852	0.0739	0.0374	0.0174	-	0.0140	0.0296	0.0105	0.0051	14.730
6/27/2012	1,015.5	0.5886	1,323.6	1.8702	-	0.2655	95.8264	1.4655	0.3312	0.2528	0.0828	0.0747	0.0366	0.0168	-	0.0135	0.0284	0.0100	0.0049	14.730
6/28/2012	1,009.1	0.5838	1,320.7	1.8534	-	0.2222	96.4886	1.0721	0.1937	0.1804	0.0593	0.0470	0.0269	0.0109	-	0.0117	0.0246	0.0087	0.0042	14.730
6/29/2012	1,009.5	0.5835	1,321.6	1.8148	-	0.2300	96.5221	1.0657	0.1960	0.1815	0.0592	0.0478	0.0269	0.0116	-	0.0116	0.0244	0.0086	0.0042	14.730
6/30/2012	1,009.8	0.5836	1,321.8	1.8151	-	0.2168	96.5185	1.0795	0.1959	0.1854	0.0588	0.0484	0.0274	0.0116	-	0.0126	0.0266	0.0094	0.0046	14.730
7/1/2012	1,009.6	0.5829	1,322.4	1.7985	-	0.1972	96.6260	1.0135	0.1917	0.1838	0.0587	0.0482	0.0278	0.0115	-	0.0121	0.0255	0.0090	0.0044	14.730
7/2/2012	1,009.9	0.5833	1,322.3	1.7745	-	0.2537	96.5026	1.1094	0.1915	0.1792	0.0574	0.0463	0.0265	0.0110	-	0.0122	0.0258	0.0091	0.0044	14.730
7/3/2012	1,009.0	0.5833	1,321.1	1.8074	-	0.2506	96.5220	1.0731	0.1843	0.1730	0.0548	0.0449	0.0258	0.0106	-	0.0119	0.0250	0.0088	0.0043	14.730
7/4/2012	1,008.7	0.5832	1,320.8	1.8474	-	0.1968	96.6136	0.9864	0.1857	0.1813	0.0572	0.0465	0.0270	0.0115	-	0.0126	0.0265	0.0094	0.0046	14.730
7/5/2012	1,009.0	0.5827	1,321.8	1.8288	-	0.1661	96.7003	0.9466	0.1864	0.1835	0.0574	0.0468	0.0274	0.0116	-	0.0130	0.0273	0.0096	0.0047	14.730
7/6/2012	1,009.5	0.5832	1,321.9	1.8072	-	0.2146	96.5715	1.0436	0.1919	0.1824	0.0583	0.0469	0.0270	0.0112	-	0.0126	0.0264	0.0093	0.0046	14.730
7/7/2012	1,009.3	0.5835	1,321.3	1.8241	-	0.2226	96.5303	1.0613	0.1925	0.1799	0.0578	0.0470	0.0265	0.0110	-	0.0121	0.0255	0.0090	0.0044	14.730
7/8/2012	1,009.0	0.5835	1,320.9	1.8541	-	0.2054	96.5488	1.0309	0.1897	0.1812	0.0585	0.0471	0.0276	0.0116	-	0.0117	0.0247	0.0087	0.0042	14.730
7/9/2012	1,009.2	0.5839	1,320.7	1.8403	-	0.2445	96.4505	1.1041	0.1933	0.1772	0.0575	0.0469	0.0268	0.0109	-	0.0113	0.0238	0.0084	0.0041	14.730
7/10/2012	1,011.6	0.5854	1,322.2	1.8361	-	0.2520	96.2351	1.2512	0.2341	0.2027	0.0645	0.0562	0.0292	0.0134	-	0.0127	0.0267	0.0094	0.0046	14.730
7/11/2012	1,014.9	0.5873	1,324.3	1.8294	-	0.2377	96.0170	1.3872	0.2938	0.2488	0.0754	0.0716	0.0346	0.0184	-	0.0157	0.0331	0.0117	0.0057	14.730
7/12/2012	1,014.4	0.5869	1,324.1	1.8247	-	0.2334	96.0824	1.3472	0.2821	0.2440	0.0738	0.0699	0.0340	0.0182	-	0.0155	0.0326	0.0115	0.0056	14.730
7/13/2012	1,013.4	0.5863	1,323.5	1.8280	-	0.2386	96.1345	1.3171	0.2669	0.2273	0.0702	0.0647	0.0321	0.0165	-	0.0141	0.0297	0.0105	0.0051	14.730
7/14/2012	1,010.3	0.5844	1,321.6	1.8107	-	0.2699	96.3577	1.1809	0.2054	0.1867	0.0597	0.0487	0.0273	0.0115	-	0.0127	0.0268	0.0095	0.0046	14.730
7/15/2012	1,009.1	0.5839	1,320.6	1.8052	-	0.3109	96.3624	1.1795	0.1849	0.1667	0.0540	0.0439	0.0246	0.0103	-	0.0109	0.0230	0.0081	0.0040	14.730
7/16/2012	1,009.3	0.5841	1,320.6	1.8136	-	0.2929	96.3695	1.1698	0.1924	0.1723	0.0555	0.0449	0.0249	0.0102	-	0.0118	0.0250	0.0088	0.0043	14.730
7/17/2012	1,009.5	0.5845	1,320.4	1.7982	-	0.3537	96.2319	1.2655	0.1941	0.1659	0.0544	0.0438	0.0245	0.0099	-	0.0107	0.0226	0.0080	0.0039	14.730

Gas Day Date	Heating Value	Gravity	Wobbe	Co2 Cont	O2 Cont	N2 Cont	Methane Cont	Ethane Cont	Propane Cont	C4+ Content	I Butane Cont	N Butane Cont	I Pentane Cont	N Pentane Cont	Neo Pentane Cont	N Hexane Cont	C6 Plus Cont	Heptane Cont	Octane Cont	Press Base
	(Btu/SCF, HHV)	(dimensionless)	(Btu/SCF, HHV)	(mol%)	(mol%)	(mol%)	(mol%)	(mol%)	(mol%)	(mol%)	(mol%)	(mol%)	(mol%)	(mol%)	(mol%)	(mol%)	(mol%)	(mol%)	(mol%)	(psia)
Min	1,006.2	0.5790	1,317.8	1.5900	-	0.1461	94.3288	0.7031	0.1252	0.1137	0.0399	0.0315	0.0009	0.0081	-	0.0107	0.0226	0.0080	0.0039	14.7
Average	1,012.0	0.5854	1,322.8	1.7669	-	0.3261	96.1763	1.3164	0.2222	0.2084	0.0620	0.0514	0.0279	0.0126	-	0.0176	0.0370	0.0131	0.0064	14.7
Max	1,030.1	0.6010	1,330.4	2.1667	-	0.4397	97.1713	2.4087	0.6112	0.5085	0.1405	0.1402	0.0620	0.0332	-	0.0427	0.0899	0.0318	0.0155	14.7
7/18/2012	1,009.2	0.5830	1,321.7	1.7711	-	0.2691	96.5332	1.0850	0.1824	0.1693	0.0540	0.0443	0.0249	0.0104	-	0.0115	0.0242	0.0086	0.0042	14.730
7/19/2012	1,009.6	0.5834	1,321.8	1.7935	-	0.2423	96.5240	1.0746	0.1942	0.1820	0.0590	0.0475	0.0270	0.0115	-	0.0119	0.0251	0.0089	0.0043	14.730
7/20/2012	1,009.3	0.5835	1,321.3	1.7987	-	0.2652	96.4874	1.0949	0.1887	0.1762	0.0567	0.0448	0.0259	0.0105	-	0.0123	0.0260	0.0092	0.0045	14.730
7/21/2012	1,023.1	0.5918	1,329.9	1.7056	-	0.3574	95.2753	1.8845	0.4792	0.3123	0.0990	0.1003	0.0412	0.0214	-	0.0162	0.0342	0.0121	0.0059	14.730
7/22/2012	1,014.8	0.5869	1,324.6	1.7781	-	0.2848	95.9862	1.4389	0.3011	0.2231	0.0730	0.0622	0.0316	0.0141	-	0.0136	0.0286	0.0101	0.0049	14.730
7/23/2012	1,010.8	0.5845	1,322.1	1.7808	-	0.3033	96.2961	1.2283	0.2142	0.1881	0.0605	0.0497	0.0274	0.0122	-	0.0123	0.0260	0.0092	0.0045	14.730
7/24/2012	1,010.6	0.5849	1,321.4	1.7820	-	0.3398	96.2297	1.2549	0.2157	0.1886	0.0598	0.0507	0.0279	0.0122	-	0.0122	0.0258	0.0091	0.0044	14.730
7/25/2012	1,011.2	0.5851	1,322.0	1.7968	-	0.3063	96.2452	1.2254	0.2352	0.2023	0.0639	0.0565	0.0293	0.0135	-	0.0126	0.0265	0.0094	0.0046	14.730
7/26/2012	1,009.5	0.5836	1,321.4	1.8000	-	0.2652	96.4631	1.1091	0.1965	0.1758	0.0574	0.0469	0.0263	0.0110	-	0.0110	0.0232	0.0082	0.0040	14.730
7/27/2012	1,009.8	0.5847	1,320.6	1.8215	-	0.3174	96.2662	1.2222	0.2048	0.1781	0.0576	0.0479	0.0260	0.0112	-	0.0114	0.0240	0.0085	0.0041	14.730
7/28/2012	1,008.7	0.5843	1,319.6	1.8175	-	0.3486	96.2875	1.2103	0.1823	0.1636	0.0529	0.0423	0.0236	0.0097	-	0.0113	0.0238	0.0084	0.0041	14.730
7/29/2012	1,008.9	0.5842	1,320.0	1.8035	-	0.3463	96.3013	1.2110	0.1828	0.1657	0.0527	0.0426	0.0241	0.0100	-	0.0117	0.0246	0.0087	0.0042	14.730
7/30/2012	1,009.7	0.5842	1,321.0	1.7700	-	0.3542	96.2871	1.2322	0.1951	0.1722	0.0543	0.0453	0.0246	0.0108	-	0.0120	0.0252	0.0089	0.0043	14.730
7/31/2012	1,009.5	0.5846	1,320.3	1.7823	-	0.3782	96.2066	1.2863	0.1918	0.1651	0.0530	0.0431	0.0233	0.0096	-	0.0116	0.0245	0.0087	0.0042	14.730
8/1/2012	1,009.8	0.5848	1,320.5	1.8222	-	0.3213	96.2473	1.2417	0.2023	0.1759	0.0560	0.0460	0.0256	0.0107	-	0.0121	0.0255	0.0090	0.0044	14.730
8/2/2012	1,009.0	0.5845	1,319.8	1.8326	-	0.3235	96.2940	1.2011	0.1886	0.1709	0.0537	0.0448	0.0247	0.0105	-	0.0120	0.0252	0.0089	0.0043	14.730
8/3/2012	1,008.1	0.5830	1,320.3	1.8321	-	0.2365	96.5841	1.0180	0.1741	0.1656	0.0524	0.0426	0.0241	0.0099	-	0.0118	0.0248	0.0088	0.0043	14.730
8/4/2012	1,009.3	0.5836	1,321.2	1.7820	-	0.3010	96.4178	1.1546	0.1867	0.1676	0.0547	0.0442	0.0245	0.0101	-	0.0110	0.0231	0.0082	0.0040	14.730
8/5/2012	1,012.6	0.5856	1,323.2	1.7483	-	0.3444	96.1021	1.3656	0.2467	0.2040	0.0645	0.0576	0.0293	0.0135	-	0.0126	0.0265	0.0094	0.0046	14.730
8/6/2012	1,011.8	0.5858	1,322.0	1.7942	-	0.3431	96.0925	1.3465	0.2362	0.2003	0.0623	0.0537	0.0278	0.0126	-	0.0141	0.0298	0.0105	0.0051	14.730
8/7/2012	1,009.7	0.5845	1,320.7	1.8305	-	0.2797	96.3558	1.1534	0.2060	0.1853	0.0582	0.0500	0.0273	0.0118	-	0.0122	0.0258	0.0091	0.0044	14.730
8/8/2012	1,010.6	0.5848	1,321.5	1.8325	-	0.2598	96.3205	1.1830	0.2219	0.1939	0.0618	0.0510	0.0282	0.0125	-	0.0130	0.0274	0.0097	0.0047	14.730
8/9/2012	1,010.2	0.5846	1,321.2	1.8383	-	0.2545	96.3478	1.1700	0.2142	0.1858	0.0600	0.0493	0.0271	0.0114	-	0.0122	0.0258	0.0091	0.0044	14.730
8/10/2012	1,010.3	0.5852	1,320.7	1.8205	-	0.3298	96.1919	1.2739	0.2120	0.1832	0.0580	0.0483	0.0264	0.0114	-	0.0126	0.0265	0.0094	0.0045	14.730
8/11/2012	1,008.9	0.5844	1,319.8	1.8331	-	0.3222	96.2993	1.1971	0.1907	0.1682	0.0532	0.0439	0.0242	0.0102	-	0.0118	0.0249	0.0088	0.0043	14.730
8/12/2012	1,009.6	0.5847	1,320.3	1.8336	-	0.3036	96.2993	1.1876	0.2036	0.1831	0.0577	0.0490	0.0270	0.0116	-	0.0122	0.0256	0.0090	0.0044	14.730
8/13/2012	1,023.3	0.5933	1,328.5	1.7587	-	0.4020	95.0113	2.0701	0.4667	0.3069	0.0990	0.0904	0.0402	0.0217	-	0.0179	0.0377	0.0133	0.0065	14.730
8/14/2012	1,020.5	0.5926	1,325.7	1.8604	-	0.3533	95.1780	1.9048	0.4264	0.2924	0.0943	0.0844	0.0393	0.0201	-	0.0175	0.0368	0.0130	0.0063	14.730
8/15/2012	1,015.1	0.5903	1,321.2	1.9633	-	0.3062	95.5481	1.6199	0.3326	0.2425	0.0816	0.0673	0.0338	0.0150	-	0.0144	0.0304	0.0107	0.0052	14.730
8/16/2012	1,011.9	0.5870	1,320.7	1.8829	-	0.3116	95.9660	1.3914	0.2567	0.2031	0.0664	0.0544	0.0285	0.0124	-	0.0133	0.0281	0.0099	0.0048	14.730
8/17/2012	1,009.5	0.5850	1,319.9	1.8223	-	0.3599	96.1778	1.2843	0.1943	0.1721	0.0546	0.0447	0.0251	0.0102	-	0.0121	0.0254	0.0090	0.0044	14.730
8/18/2012	1,009.5	0.5845	1,320.4	1.7811	-	0.3723	96.2277	1.2747	0.1868	0.1672	0.0530	0.0439	0.0250	0.0104	-	0.0112	0.0237	0.0084	0.0041	14.730
8/19/2012	1,009.5	0.5842	1,320.8	1.7669	-	0.3740	96.2579	1.2644	0.1806	0.1681	0.0515	0.0422	0.0236	0.0097	-	0.0132	0.0279	0.0099	0.0048	14.730
8/20/2012	1,009.4	0.5842	1,320.6	1.7752	-	0.3632	96.2723	1.2508	0.1821	0.1677	0.0518	0.0429	0.0242	0.0101	-	0.0124	0.0263	0.0093	0.0045	14.730
8/21/2012	1,009.4	0.5840	1,320.9	1.7779	-	0.3420	96.3206	1.2216	0.1812	0.1678	0.0523	0.0426	0.0245	0.0101	-	0.0123	0.0260	0.0092	0.0045	14.730
8/22/2012	1,009.6	0.5840	1,321.1	1.7639	-	0.3437	96.3192	1.2320	0.1825	0.1705	0.0522	0.0431	0.0247	0.0104	-	0.0129	0.0272	0.0096	0.0047	14.730
8/23/2012	1,010.2	0.5845	1,321.3	1.7592	-	0.3663	96.2317	1.2869	0.1919	0.1755	0.0540	0.0454	0.0254	0.0109	-	0.0128	0.0270	0.0095	0.0046	14.730
8/24/2012	1,011.0	0.5854	1,321.4	1.7879	-	0.3640	96.1000	1.3678	0.2082	0.1844	0.0570	0.0474	0.0261	0.0114	-	0.0137	0.0288	0.0102	0.0050	14.730
8/25/2012	1,011.2	0.5860	1,321.0	1.8161	-	0.3621	96.0280	1.3974	0.2190	0.1895	0.0592	0.0496	0.0269	0.0118	-	0.0135	0.0285	0.0101	0.0049	14.730
8/26/2012	1,011.8	0.5867	1,321.0	1.8231	-	0.3776	95.9318	1.4463	0.2366	0.1965	0.0627	0.0518	0.0281	0.0125	-	0.0133	0.0281	0.0099	0.0048	14.730
8/27/2012	1,011.2	0.5857	1,321.3	1.7976	-	0.3576	96.0971	1.3463	0.2224	0.1918	0.0590	0.0498	0.0265	0.0124	-	0.0142	0.0299	0.0106	0.0051	14.730
8/28/2012	1,012.4	0.5874	1,320.9	1.8549	-	0.3570	95.8753	1.4592	0.2588	0.2070	0.0668	0.0546	0.0296	0.0132	-	0.0138	0.0290	0.0102	0.0050	14.730
8/29/2012	1,012.2	0.5870	1,321.1	1.8600	-	0.3196	95.9781	1.3928	0.2506	0.2121	0.0674	0.0552	0.0298	0.0138	-	0.0148	0.0311	0.0110	0.0054	14.730
8/30/2012	1,010.1	0.5848	1,320.9	1.8472	-	0.2679	96.3250	1.1683	0.2099	0.1939	0.0609	0.0494	0.0287	0.0124	-	0.0137	0.0288	0.0102	0.0050	14.730
8/31/2012	1,009.1	0.5835	1,321.0	1.8376	-	0.2254	96.5398	1.0346	0.1903	0.1840	0.0571	0.0475	0.0273	0.0118	-	0.0130	0.0273	0.0096	0.0047	14.730
9/1/2012	1,008.8	0.5838	1,320.3	1.7859	-	0.3394	96.3632	1.1797	0.1783	0.1637	0.0518	0.0427	0.0237	0.0100	-	0.0114	0.0241	0.0085	0.0041	14.730
9/2/2012	1,009.1	0.5842	1,320.2	1.7842	-	0.3699	96.2659	1.2486	0.1783	0.1645	0.0505	0.0417	0.0235	0.0099	-	0.0125	0.0264	0.0093	0.0045	14.730
9/3/2012	1,009.0	0.5844	1,319.9	1.7933	-	0.3701	96.2541	1.2504	0.1780	0.1664	0.0506	0.0413	0.0233	0.0095	-	0.0134	0.0283	0.0100	0.0049	14.730
9/4/2012	1,009.2	0.5842	1,320.4	1.7735	-	0.3750	96.2649	1.2523	0.1800	0.1657	0.0511	0.0418	0.0240	0.0100	-	0.0125	0.0263	0.0093	0.0045	14.730
9/5/2012	1,009.1	0.5836	1,320.9	1.7642	-	0.3383	96.3780	1.1881	0.1787	0.1636	0.0512	0.0418	0.0233	0.0097	-	0.0121	0.0255	0.0090	0.0044	14.730
9/6/2012	1,012.3	0.5863	1,322.1	1.8092	-	0.3343	96.0582	1.3486	0.2469	0.2153	0.0678	0.0590	0.0304	0.0146	-	0.0140	0.0295	0.0104	0.0051	14.730
9/7/2012	1,010.6	0.5847	1,321.6	1.7830	-	0.3277	96.2330	1.2823	0.2061	0.1793	0.0566	0.0475	0.0248	0.0109	-	0.0127	0.0268	0.0095	0.0046	14.730
9/8/2012	1,010.3	0.5848	1,321.1	1.7672	-	0.3807	96.1740	1.3117	0.2019	0.1755	0.0548	0.0458	0.0252	0.0112	-	0.0124	0.0261	0.0092	0.0045	14.730
9/9/2012	1,011.1	0.5857	1,321.2	1.7744	-	0.4008	96.0574	1.3755	0.2141	0.1920	0.0578	0.0484	0.0261	0.0118	-	0.0154	0.0325	0.0115	0.0056	14.730
9/10/2012	1,010.3	0.5852	1,320.7	1.7938	-	0.3753	96.1478	1.3066	0.2044	0.1851	0.0559	0.0471	0.0261	0.0114	-	0.0144	0.0302	0.0107	0.0052	14.730
9/11/2012	1,009.8	0.5846	1,320.7	1.7960	-	0.3436	96.2677	1.2293	0.1950	0.1816	0.0544	0.0465	0.0252	0.0111	-	0.0143	0.0301	0.0106	0.0052	14.730
9/12/2012	1,011.1	0.5853	1,321.6	1.7856	-	0.3535	96.1443	1.3226	0.2151	0.1918	0.0585	0.0503	0.0270	0.0122	-	0.0141	0.0297	0.0105	0.0051	14.730
9/13/2012	1,009.2	0.5838	1,320.8	1.7452	-	0.3821	96.3027	1.2410	0.1771	0.1623	0.0504	0.0419	0.0239	0.0102	-	0.0116	0.0243	0.0086	0.0042	14.730
9/14/2012	1,009.6	0.5842	1,320.9	1.7633	-	0.3644	96.2706	1.2627	0.1821	0.1684	0.0516	0.0427	0.0243	0.0103	-	0.0127	0.0268	0.0095	0.0046	14.730
9/15/2012	1,009.8	0.5845	1,320.8	1.7732	-	0.3702	96.2276	1.2808	0.1881	0.1725	0.0517	0.0441	0.0244	0.0104	-	0.0135	0.0284	0.0100	0.0049	14.730
9/16/2012	1,009.2	0.5838	1,320.8	1.7598	-	0.3603	96.3229	1.2274	0.1773	0.1631	0.0502	0.0418	0.0239	0.0102	-	0.0119	0.0251	0.0089	0.0043	14.730
9/17/2012	1,009.4	0.5840	1,320.9	1.7666	-	0.3579	96.3041	1.2351	0.1809	0.1666	0.0513	0.0426	0.0238	0.0100	-	0.0125	0.0264	0.0093	0.0045	14.730
9/18/2012	1,010.7	0.5850	1,321.4	1.7690	-	0.3670	96.1775	1.3089	0.2054	0.1852	0.0560	0.0479	0.0254	0.0112	-	0.0144	0.0303	0.0107	0.0052	14.730
9/19/2012	1,010.7	0.5843	1,322.2	1.7340	-	0.3500	96.2917	1.2494	0.2020	0.1862	0.0558	0.0481	0.0258	0.0114	-	0.0145	0.0306	0.0108	0.0053	14.730
9/20/2012	1,010.3	0.5838	1,322.3	1.7393	-	0.3203	96.3998	1.1716	0.1933	0.1893	0.0564	0.0478	0.0269	0.0116	-	0.0150	0.0316	0.0112	0.0054	14.730
9/21/2012	1,011.8	0.5853	1,322.5	1.7614	-	0.3436	96.1704	1.3061	0.2276	0.2053	0.0622	0.0541	0.0279	0.0124	-	0.0157	0.0330	0.0117	0.0057	14.730
9/22/2012	1,010.3	0.5844	1,321.6	1.7426	-	0.3741	96.2578	1.2601	0.1968	0.1821	0.0549	0.0459	0.0253	0.0106	-	0.0146	0.0308	0.0109	0.0053	14.730
9/23/2012	1,009.8	0.5847	1,320.6	1.7697	-	0.3957	96.1955	1.2833	0.1916	0.1776	0.0529	0.0445	0.0245	0.0103	-	0.0146	0.0308	0.0109	0.0053	14.730

Gas Day Date	Heating Value	Gravity	Wobbe	Co2 Cont	O2 Cont	N2 Cont	Methane Cont	Ethane Cont	Propane Cont	C4+ Content	I Butane Cont	N Butane Cont	I Pentane Cont	N Pentane Cont	Neo Pentane Cont	N Hexane Cont	C6 Plus Cont	Heptane Cont	Octane Cont	Press Base
	(Btu/SCF, HHV)	(dimensionless)	(Btu/SCF, HHV)	(mol%)	(mol%)	(mol%)	(mol%)	(mol%)	(mol%)	(mol%)	(mol%)	(mol%)	(mol%)	(mol%)	(mol%)	(mol%)	(mol%)	(mol%)	(mol%)	(psia)
Min	1,006.2	0.5790	1,317.8	1.5900	-	0.1461	94.3288	0.7031	0.1252	0.1137	0.0399	0.0315	0.0009	0.0081	-	0.0107	0.0226	0.0080	0.0039	14.7
Average	1,012.0	0.5854	1,322.8	1.7669	-	0.3261	96.1763	1.3164	0.2222	0.2084	0.0620	0.0514	0.0279	0.0126	-	0.0176	0.0370	0.0131	0.0064	14.7
Max	1,030.1	0.6010	1,330.4	2.1667	-	0.4397	97.1713	2.4087	0.6112	0.5085	0.1405	0.1402	0.0620	0.0332	-	0.0427	0.0899	0.0318	0.0155	14.7
9/24/2012	1,009.9	0.5845	1,320.9	1.7442	-	0.4054	96.2024	1.3000	0.1870	0.1746	0.0520	0.0434	0.0238	0.0098	-	0.0147	0.0309	0.0109	0.0053	14.730
9/25/2012	1,010.2	0.5846	1,321.2	1.7421	-	0.4020	96.1718	1.3330	0.1923	0.1701	0.0533	0.0440	0.0246	0.0100	-	0.0123	0.0259	0.0091	0.0045	14.730
9/26/2012	1,010.9	0.5851	1,321.6	1.7497	-	0.3996	96.1035	1.3745	0.2057	0.1786	0.0559	0.0470	0.0251	0.0106	-	0.0129	0.0271	0.0096	0.0047	14.730
9/27/2012	1,011.3	0.5850	1,322.2	1.7191	-	0.4060	96.1126	1.3835	0.2091	0.1822	0.0564	0.0469	0.0253	0.0108	-	0.0138	0.0290	0.0102	0.0050	14.730
9/28/2012	1,010.2	0.5848	1,321.0	1.7634	-	0.3868	96.1617	1.3314	0.1971	0.1707	0.0538	0.0451	0.0242	0.0098	-	0.0122	0.0256	0.0091	0.0044	14.730
9/29/2012	1,009.4	0.5844	1,320.4	1.7768	-	0.3828	96.2202	1.2841	0.1836	0.1640	0.0507	0.0421	0.0232	0.0094	-	0.0124	0.0262	0.0093	0.0045	14.730
9/30/2012	1,009.4	0.5844	1,320.4	1.7680	-	0.3895	96.2229	1.2837	0.1799	0.1681	0.0511	0.0422	0.0237	0.0097	-	0.0133	0.0281	0.0099	0.0048	14.730
10/1/2012	1,009.6	0.5842	1,320.9	1.7570	-	0.3831	96.2480	1.2737	0.1826	0.1684	0.0508	0.0425	0.0231	0.0095	-	0.0137	0.0288	0.0102	0.0049	14.730
10/2/2012	1,009.5	0.5840	1,321.0	1.7431	-	0.3868	96.2705	1.2661	0.1795	0.1666	0.0502	0.0419	0.0228	0.0095	-	0.0136	0.0286	0.0101	0.0049	14.730
10/3/2012	1,013.9	0.5874	1,322.9	1.7878	-	0.3778	95.7909	1.5914	0.2633	0.2037	0.0593	0.0556	0.0261	0.0130	-	0.0160	0.0337	0.0119	0.0058	14.730
10/4/2012	1,010.3	0.5849	1,321.0	1.7756	-	0.3754	96.1575	1.3384	0.1930	0.1733	0.0518	0.0434	0.0236	0.0098	-	0.0144	0.0303	0.0107	0.0052	14.730
10/5/2012	1,009.2	0.5847	1,319.8	1.8027	-	0.3813	96.1898	1.2894	0.1816	0.1676	0.0511	0.0421	0.0233	0.0095	-	0.0134	0.0282	0.0100	0.0048	14.730
10/6/2012	1,009.6	0.5844	1,320.7	1.7608	-	0.3955	96.2102	1.2961	0.1812	0.1691	0.0507	0.0422	0.0237	0.0097	-	0.0138	0.0290	0.0102	0.0050	14.730
10/7/2012	1,010.0	0.5842	1,321.4	1.7191	-	0.4068	96.2417	1.2920	0.1794	0.1757	0.0512	0.0422	0.0239	0.0099	-	0.0156	0.0329	0.0116	0.0057	14.730
10/8/2012	1,010.0	0.5841	1,321.5	1.7100	-	0.4184	96.2493	1.2792	0.1800	0.1778	0.0514	0.0429	0.0241	0.0101	-	0.0159	0.0334	0.0118	0.0057	14.730
10/9/2012	1,009.7	0.5848	1,320.3	1.7833	-	0.3919	96.1707	1.3117	0.1815	0.1755	0.0514	0.0422	0.0236	0.0095	-	0.0157	0.0331	0.0117	0.0057	14.730
10/10/2012	1,010.0	0.5846	1,321.0	1.7542	-	0.3960	96.1655	1.3506	0.1783	0.1690	0.0500	0.0413	0.0228	0.0096	-	0.0146	0.0307	0.0108	0.0053	14.730
10/11/2012	1,010.1	0.5843	1,321.4	1.7218	-	0.4131	96.1850	1.3455	0.1808	0.1666	0.0505	0.0410	0.0227	0.0093	-	0.0139	0.0292	0.0103	0.0050	14.730
10/12/2012	1,010.0	0.5848	1,320.7	1.7671	-	0.3884	96.1580	1.3431	0.1862	0.1699	0.0524	0.0423	0.0234	0.0093	-	0.0137	0.0288	0.0102	0.0050	14.730
10/13/2012	1,010.5	0.5850	1,321.2	1.7576	-	0.3981	96.1089	1.3872	0.1885	0.1730	0.0523	0.0430	0.0236	0.0096	-	0.0143	0.0302	0.0107	0.0052	14.730
10/14/2012	1,010.4	0.5846	1,321.5	1.7436	-	0.3893	96.1723	1.3489	0.1854	0.1739	0.0520	0.0430	0.0235	0.0097	-	0.0147	0.0310	0.0110	0.0053	14.730
10/15/2012	1,010.4	0.5847	1,321.4	1.7549	-	0.3754	96.2067	1.3085	0.1872	0.1824	0.0533	0.0440	0.0248	0.0106	-	0.0160	0.0337	0.0119	0.0058	14.730
10/16/2012	1,011.2	0.5848	1,322.3	1.7255	-	0.3880	96.1509	1.3768	0.1915	0.1820	0.0530	0.0449	0.0246	0.0104	-	0.0158	0.0333	0.0118	0.0057	14.730
10/17/2012	1,010.1	0.5845	1,321.2	1.7512	-	0.3869	96.1967	1.3230	0.1828	0.1735	0.0507	0.0425	0.0235	0.0096	-	0.0152	0.0320	0.0113	0.0055	14.730
10/18/2012	1,011.1	0.5842	1,322.9	1.7087	-	0.3609	96.2643	1.3036	0.1952	0.1816	0.0537	0.0449	0.0247	0.0104	-	0.0154	0.0325	0.0115	0.0056	14.730
10/19/2012	1,011.4	0.5841	1,323.4	1.6964	-	0.3481	96.2960	1.2947	0.1920	0.1883	0.0553	0.0453	0.0256	0.0103	-	0.0167	0.0351	0.0124	0.0060	14.730
10/20/2012	1,011.6	0.5845	1,323.2	1.7095	-	0.3597	96.2195	1.3396	0.1956	0.1916	0.0563	0.0463	0.0261	0.0107	-	0.0168	0.0354	0.0125	0.0061	14.730
10/21/2012	1,011.1	0.5848	1,322.2	1.7460	-	0.3619	96.1598	1.3777	0.1893	0.1790	0.0540	0.0435	0.0250	0.0102	-	0.0149	0.0314	0.0111	0.0054	14.730
10/22/2012	1,012.7	0.5864	1,322.5	1.7650	-	0.3813	95.9519	1.4906	0.2241	0.2025	0.0610	0.0504	0.0274	0.0119	-	0.0167	0.0351	0.0124	0.0060	14.730
10/23/2012	1,014.0	0.5873	1,323.1	1.7682	-	0.3849	95.8450	1.5435	0.2519	0.2243	0.0662	0.0554	0.0293	0.0138	-	0.0192	0.0404	0.0143	0.0069	14.730
10/24/2012	1,011.3	0.5843	1,323.0	1.7058	-	0.3611	96.2358	1.3430	0.1877	0.1811	0.0537	0.0437	0.0244	0.0102	-	0.0158	0.0333	0.0118	0.0057	14.730
10/25/2012	1,012.1	0.5842	1,324.2	1.6823	-	0.3418	96.2454	1.3555	0.2040	0.1847	0.0560	0.0468	0.0250	0.0107	-	0.0149	0.0313	0.0111	0.0054	14.730
10/26/2012	1,014.2	0.5861	1,324.8	1.7178	-	0.3367	96.0329	1.4576	0.2524	0.2192	0.0632	0.0588	0.0274	0.0141	-	0.0179	0.0378	0.0134	0.0065	14.730
10/27/2012	1,010.4	0.5840	1,322.2	1.7429	-	0.3369	96.3388	1.2252	0.1853	0.1872	0.0542	0.0437	0.0250	0.0103	-	0.0174	0.0366	0.0129	0.0063	14.730
10/28/2012	1,010.3	0.5842	1,321.8	1.7664	-	0.3254	96.3351	1.2108	0.1878	0.1907	0.0557	0.0455	0.0252	0.0100	-	0.0175	0.0368	0.0130	0.0063	14.730
10/29/2012	1,010.5	0.5843	1,322.0	1.7360	-	0.3596	96.2816	1.2647	0.1881	0.1854	0.0546	0.0444	0.0249	0.0100	-	0.0166	0.0349	0.0123	0.0060	14.730
10/30/2012	1,019.4	0.5913	1,325.7	1.7883	-	0.4085	95.3032	1.8442	0.3980	0.2769	0.0845	0.0776	0.0344	0.0161	-	0.0207	0.0436	0.0154	0.0075	14.730
10/31/2012	1,015.3	0.5897	1,322.1	1.8870	-	0.3554	95.5843	1.6373	0.3084	0.2463	0.0774	0.0613	0.0313	0.0130	-	0.0204	0.0429	0.0152	0.0074	14.730
11/1/2012	1,013.3	0.5869	1,322.7	1.7978	-	0.3483	95.9968	1.4046	0.2353	0.2403	0.0650	0.0538	0.0296	0.0151	-	0.0247	0.0521	0.0184	0.0090	14.730
11/2/2012	1,018.0	0.5907	1,324.5	1.8358	-	0.3614	95.4979	1.6976	0.3329	0.2991	0.0863	0.0742	0.0375	0.0187	-	0.0265	0.0559	0.0198	0.0096	14.730
11/3/2012	1,020.8	0.5936	1,324.9	1.8562	-	0.4325	95.0763	1.9334	0.3895	0.3404	0.0954	0.0848	0.0421	0.0233	-	0.0305	0.0643	0.0227	0.0111	14.730
11/4/2012	1,021.0	0.5937	1,325.1	1.8581	-	0.4372	95.0496	1.9531	0.3888	0.3431	0.0948	0.0839	0.0420	0.0230	-	0.0320	0.0674	0.0238	0.0116	14.730
11/5/2012	1,021.0	0.5938	1,325.0	1.8597	-	0.4377	95.0529	1.9465	0.3879	0.3456	0.0952	0.0843	0.0424	0.0228	-	0.0325	0.0684	0.0242	0.0118	14.730
11/6/2012	1,020.8	0.5936	1,324.9	1.8580	-	0.4342	95.0620	1.9491	0.3868	0.3392	0.0948	0.0831	0.0419	0.0224	-	0.0312	0.0658	0.0233	0.0113	14.730
11/7/2012	1,021.0	0.5937	1,325.1	1.8590	-	0.4341	95.0557	1.9512	0.3868	0.3441	0.0941	0.0828	0.0422	0.0225	-	0.0330	0.0695	0.0246	0.0119	14.730
11/8/2012	1,021.0	0.5937	1,325.1	1.8565	-	0.4350	95.0536	1.9554	0.3868	0.3433	0.0945	0.0832	0.0414	0.0226	-	0.0327	0.0689	0.0243	0.0118	14.730
11/9/2012	1,021.2	0.5938	1,325.2	1.8554	-	0.4305	95.0588	1.9498	0.3888	0.3481	0.0951	0.0843	0.0423	0.0223	-	0.0335	0.0706	0.0249	0.0121	14.730
11/10/2012	1,009.2	0.5861	1,318.2	1.8643	-	0.4181	96.0026	1.3633	0.1886	0.1785	0.0520	0.0429	0.0235	0.0095	-	0.0163	0.0343	0.0121	0.0059	14.730
11/11/2012	1,010.2	0.5854	1,320.3	1.7938	-	0.4005	96.1064	1.3343	0.1918	0.1897	0.0549	0.0450	0.0247	0.0102	-	0.0177	0.0372	0.0131	0.0064	14.730
11/12/2012	1,010.2	0.5855	1,320.2	1.8048	-	0.3920	96.1056	1.3344	0.1913	0.1883	0.0538	0.0443	0.0250	0.0103	-	0.0177	0.0372	0.0131	0.0064	14.730
11/13/2012	1,010.0	0.5852	1,320.3	1.8183	-	0.3519	96.1982	1.2627	0.1921	0.1939	0.0555	0.0454	0.0254	0.0105	-	0.0184	0.0387	0.0137	0.0067	14.730
11/14/2012	1,027.9	0.5973	1,330.0	1.8172	-	0.4154	94.4817	2.4087	0.5353	0.3696	0.1116	0.0991	0.0434	0.0224	-	0.0300	0.0631	0.0223	0.0108	14.730
11/15/2012	1,014.8	0.5880	1,323.4	1.8119	-	0.3369	95.8304	1.5164	0.2817	0.2421	0.0721	0.0602	0.0308	0.0137	-	0.0210	0.0443	0.0157	0.0076	14.730
11/16/2012	1,012.8	0.5868	1,322.1	1.8227	-	0.3258	95.9986	1.4142	0.2379	0.2197	0.0635	0.0521	0.0288	0.0126	-	0.0202	0.0425	0.0150	0.0073	14.730
11/17/2012	1,011.0	0.5856	1,321.1	1.8245	-	0.3223	96.1655	1.2941	0.2073	0.2038	0.0592	0.0480	0.0267	0.0112	-	0.0189	0.0398	0.0141	0.0068	14.730
11/18/2012	1,011.0	0.5856	1,321.1	1.8235	-	0.3218	96.1673	1.2940	0.2077	0.2030	0.0593	0.0483	0.0267	0.0112	-	0.0185	0.0390	0.0138	0.0067	14.730
11/19/2012	1,010.3	0.5849	1,321.0	1.8242	-	0.3003	96.2910	1.2060	0.1942	0.2026	0.0564	0.0482	0.0269	0.0111	-	0.0193	0.0407	0.0144	0.0070	14.730
11/20/2012	1,009.1	0.5858	1,318.4	1.8987	-	0.3386	96.1456	1.2563	0.1883	0.1893	0.0540	0.0445	0.0246	0.0106	-	0.0179	0.0377	0.0133	0.0065	14.730
11/21/2012	1,009.2	0.5857	1,318.7	1.8651	-	0.3764	96.1122	1.2944	0.1844	0.1843	0.0519	0.0429	0.0241	0.0097	-	0.0179	0.0378	0.0134	0.0065	14.730
11/22/2012	1,008.5	0.5851	1,318.4	1.8414	-	0.3993	96.1721	1.2524	0.1734	0.1771	0.0501	0.0415	0.0234	0.0097	-	0.0169	0.0355	0.0125	0.0061	14.730
11/23/2012	1,008.5	0.5849	1,318.7	1.8402	-	0.3832	96.2107	1.2318	0.1757	0.1734	0.0500	0.0411	0.0228	0.0092	-	0.0162	0.0341	0.0121	0.0059	14.730
11/24/2012	1,008.7	0.5849	1,318.9	1.8265	-	0.3912	96.1953	1.2521	0.1754	0.1749	0.0502	0.0414	0.0231	0.0092	-	0.0164	0.0346	0.0122	0.0059	14.730
11/25/2012	1,008.5	0.5847	1,318.9	1.8163	-	0.3977	96.2122	1.2500	0.1708	0.1680	0.0483	0.0396	0.0218	0.0086	-	0.0160	0.0337	0.0119	0.0058	14.730
11/26/2012	1,008.4	0.5847	1,318.8	1.8318	-	0.3806	96.2200	1.2427	0.1724	0.1665	0.0488	0.0403	0.0221	0.0087	-	0.0150	0.0316	0.0112	0.0054	14.730
11/27/2012	1,009.6	0.5848	1,320.2	1.7791	-	0.4011	96.1802	1.2941	0.1819	0.1789	0.0518	0.0427	0.0240	0.0097	-	0.0163	0.0344	0.0122	0.0059	14.730
11/28/2012	1,009.6	0.5848	1,320.2	1.7791	-	0.4011	96.1802	1.2941	0.1819	0.1789	0.0518	0.0427	0.0240	0.0097	-	0.0163	0.0344	0.0122	0.0059	14.730

Cummins Fire Power	**Engine Specification Sheet** **Cummins Fire Power** De Pere, WI 54115 http://www.cumminsfirepower.com	**CFP Engine Model** **CFP15E-F Series** Curve Number: **FR - 10549 & 10663** Revision Date: **June 2011**

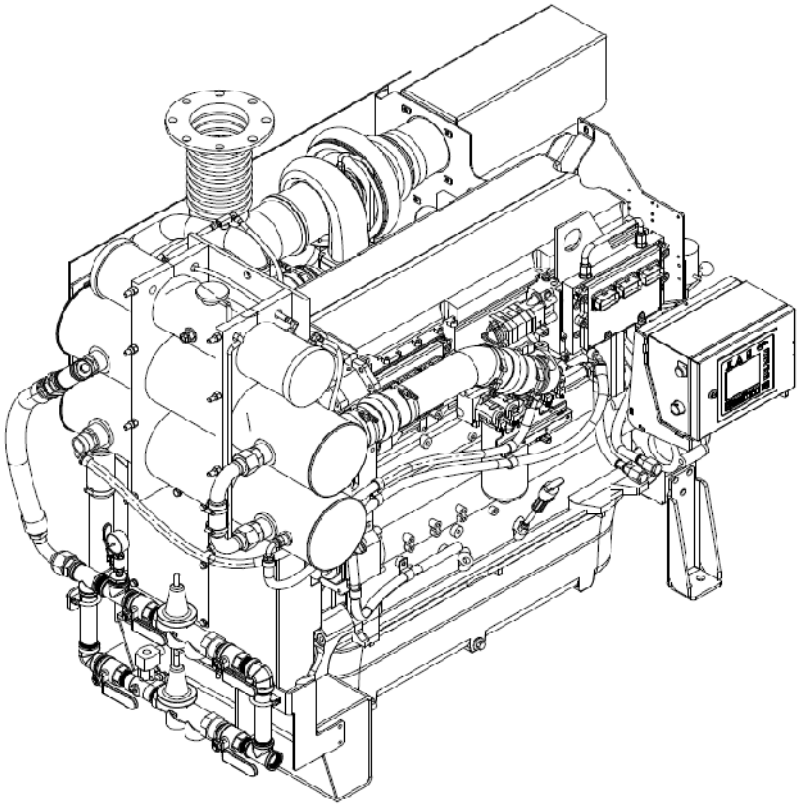

Operating Speed (RPM) Listed Ratings

Model	1470		1760		1900		2100		2250	
CFP15E-F70			686	(512)						
CFP15E-F60			650	(485)						
CFP15E-F50			610	(455)						
CFP15E-F40	477	(356)	575	(429)	610	(455)	610	(455)	475	(354)
CFP15E-F30	450	(336)	542	(404)	575	(429)	575	(429)	448	(334)
CFP15E-F20	411	(306)	494	(368)	524	(391)	525	(391)	409	(305)
CFP15E-F10	382	(285)	460	(343)	488	(364)	488	(364)	380	(283)

Ratings are: HP (kW)

Specifications

Aspiration……..Turbocharged and Charge Air Cooled
Rotation…… Counter clockwise from flywheel end
Weight - lb (kg) Est ……..… 4400 (1980)
Displacement - in^3 (liter)…… 915 (15.0)
Engine Type……4 Cycle; In-Line, 6 Cylinder
Engine Series……..Cummins QSX15 Series
Exhaust Emissions…CFP15E-F10, F20, F30, F40……..EPA/CARB Tier 3
Exhaust Emissions…CFP15E-F50, F60, F70……..EPA/CARB Tier 2

Equipment	Standard	Optional
Air Cleaner	Direct Mounted, oil impregnated serviceable element (K&N)	Housed Unit, Flame Resistant Element (FLG AH19266)
Alternator	24V-DC, 70 Amps; With Belt Guard	N/A
Cooling Loop	Optional	For Fresh Water or Salt Water Applications
Exhaust Protection	Metal Guards on Manifolds and Turbo	N/A
Exhaust Flex Connection	SS Flex, NPT	SS Flex, 150# Flange
Flywheel Power Take-Off	Flywheel	●Drive Shaft System ●Stub Shaft
Fuel Connections	Fire Resistant Flexible Supply and Return Lines	N/A
Fuel Injection	Direct Injection	N/A
Fuel Filter	Primary Filter with Priming Pump	N/A
Engine Heater	120 / 240 VAC, 3000 Watt	N/A
Governor, Speed	Constant Speed	N/A
Heat Exchanger	Tube & Shell Type, 60 PSI with NPTF Connections	N/A
Instrument Panel	English and Metric, Tachometer, Hourmeter, Water Temperature, Oil Pressure & Two (2) Voltmeters	N/A
Junction Box	Integral with Instrument Panel; For DC Wiring Interconnection to Engine Controller	N/A
Lube Oil Cooler	Engine Water Cooled, Plate Type	N/A
Lube Oil Filter	Full Flow with By-Pass Valve	N/A
Lube Oil Pump	Gear Driven	N/A
Manual Start	On Instrument Panel	N/A
Overspeed Controls	Electronic with Reset & Test on Instrument Panel	N/A
Raw Water Solenoid Operation	Automatic from Engine Controller & from Emergency Local Control	N/A
Run-Stop Control	On Instrument Panel	N/A
Run Solenoid	24V-DC	N/A
Starters	24V-DC	N/A
Throttle Control	Adjustable Speed Control	N/A
Water Pump	Poly-Vee Belt Drive with Guard	N/A

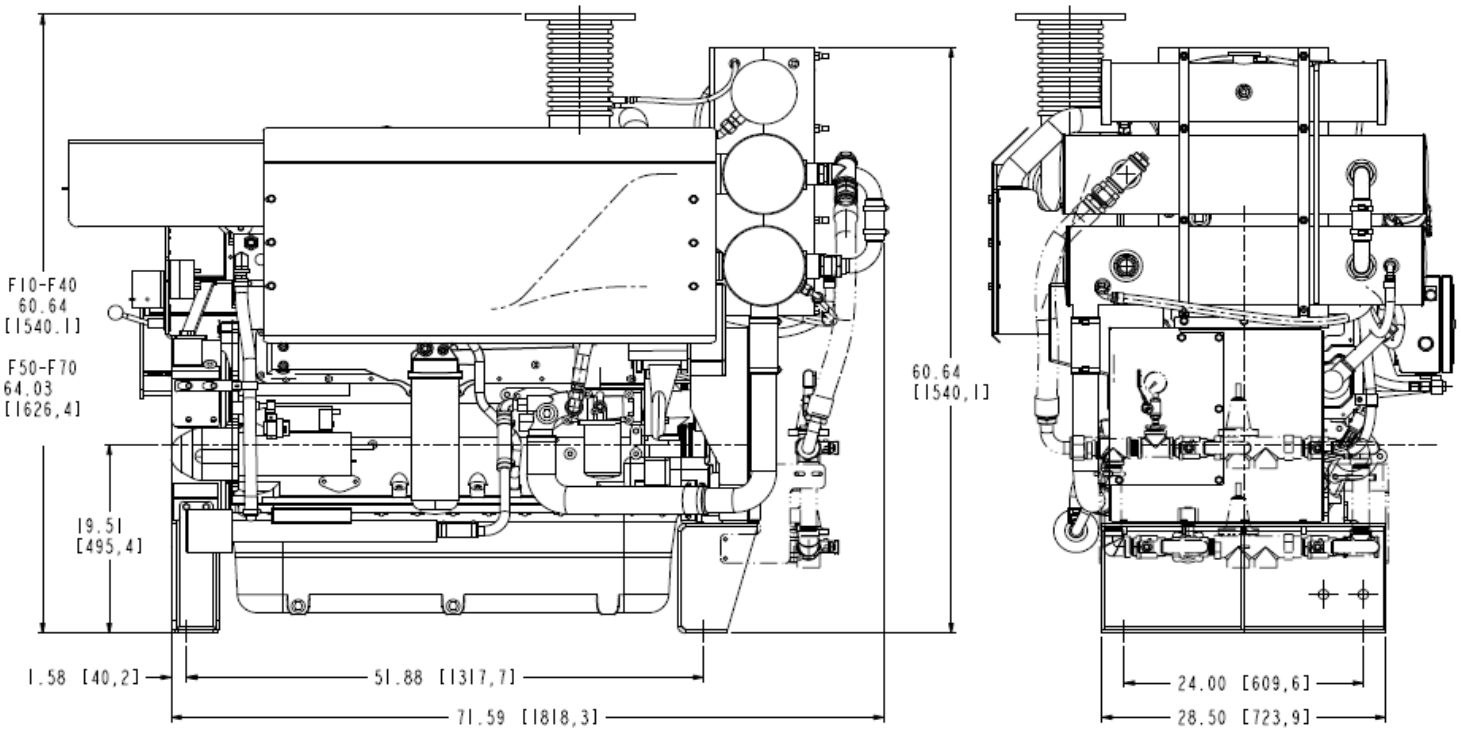

Engine Ratings Baselines

- Engines are rated at standard SAE conditions of 29.61 in. (7521 mm) Hg barometer and 77°F (25°C) inlet air temperature (approximates 300ft. (91.4 m) above sea level) by the testing laboratory (see SAE Standard J1349).
- A deduction of 3 percent from engine horsepower rating at standard SAE conditions shall be made for diesel engines for each 1000 ft. (305 m) altitude above 300 ft. (91.4 m).
- A deduction of 1 percent from engine horsepower rating as corrected to standard SAE conditions shall be made for diesel engines for every 10°F above 77°F (24°C) ambient temperature.

Certified Power

This Cummins Fire Power fire pump driver is built to comply with NFPA-20, and is UL listed and FM approved.

For additional information, click the hyperlinks below.

CFP15E-F10
CFP15E-F20
CFP15E-F30
CFP15E-F40
CFP15E-F50
CFP15E-F60
CFP15E-F70

EPA & CARB Tier 3 Emission Data
Fire Pump NSPS Compliant

CFP15E-F30 Fire Pump Driver

Type: 4 Cycle; In-Line; 6 Cylinder
Aspiration: Turbocharged, Charge Air Cooled

15 PPM Diesel Fuel																	
		Fuel Consumption		D2 Cycle Exhaust Emissions										Exhaust			
				Grams per BHP - HR					Grams per kW - HR					Temperature		Gas Flow	
RPM	BHP	Gal/Hr	L/hr	NMHC	NOx	NMHC+NOx	CO	PM	NMHC	NOx	NMHC+NOx	CO	PM	°F	°C	CFM	L/sec
1470	450	23.5	89.0											969	521	2740	1293
1760	542	26.5	100.3											905	485	3164	1493
1900	575	27.9	105.6	0.086	2.565	2.651	0.671	0.078	0.116	3.439	3.555	0.900	0.105	906	486	3328	1571
2100	575	29.1	110.2											884	473	3577	1688
2250	448	23.1	87.4											778	414	3756	1773

The emissions values above are based on CARB approved calculations for converting EPA (500 ppm) fuel to CARB (15 ppm) fuel.

300-4000 PPM Diesel Fuel																	
		Fuel Consumption		D2 Cycle Exhaust Emissions										Exhaust			
				Grams per BHP - HR					Grams per kW - HR					Temperature		Gas Flow	
RPM	BHP	Gal/Hr	L/hr	NMHC	NOx	NMHC+NOx	CO	PM	NMHC	NOx	NMHC+NOx	CO	PM	°F	°C	CFM	L/sec
1470	450	23.5	89.0											969	521	2740	1293
1760	542	26.5	100.3											905	485	3164	1493
1900	575	27.9	105.6	0.104	2.781	2.886	0.671	0.089	0.14	3.730	3.870	0.900	0.120	906	486	3328	1571
2100	575	29.1	110.2											884	473	3577	1688
2250	448	23.1	87.4											778	414	3756	1773

QSX15 Base Model Manufactured by Cummins Inc.
- Using fuel rating 10663

Reference EPA Standard Engine Family: ACEXL015AAH
Reference CARB Executive Order: U-R-002-0532

No special options needed to meet current regulation emissions for all 50 states

Test Methods:

EPA/CARB Nonroad emissions recorded per 40CFR89 (ref. ISO8178-1) and weighted at load points prescribed in Subpart E, Appendix A, for Constant Spee
Engines (ref. ISO8178-4, D2).

Diesel Fuel Specifications:

Cetane Number: 40-48
Reference: ASTM D975 No. 2-D

Reference Conditions:

Air Inlet Temperature: 25°C (77°F)
Fuel Inlet Temperature: 40°C (104°F)
Barometric Pressure: 100 kPa (29.53 in Hg)
Humidity: 10.7 g/kg (75 grains H_2O/lb) of dry air; required for NOx correction

Restrictions: Intake Restriction set to a maximum allowable limit for clean filter; Exhaust Back Pressure set to maximum allowable limit.

Tests conducted using alternate test methods, instrumentation, fuel or reference conditions can yield different results.

Revision Date: 24MAR2010

DIESEL GENERATOR SET

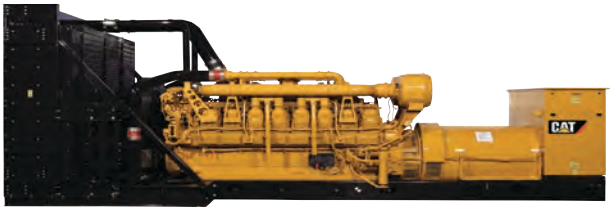

Image shown may not reflect actual package.

STANDBY
2000 ekW 2500 kVA
60 Hz 1800 rpm 480 Volts

Caterpillar is leading the power generation marketplace with Power Solutions engineered to deliver unmatched flexibility, expandability, reliability, and cost-effectiveness.

FEATURES

FUEL/EMISSIONS STRATEGY
- EPA Certified for Stationary Emergency Application (EPA Tier 2 emissions levels)

DESIGN CRITERIA
- The generator set accepts 100% rated load in one step per NFPA 110 and meets ISO 8528-5 transient response.

UL 2200 / CSA - Optional
- UL 2200 listed packages
- CSA Certified

Certain restrictions may apply. Consult with your Cat® Dealer.

FULL RANGE OF ATTACHMENTS
- Wide range of bolt-on system expansion attachments, factory designed and tested
- Flexible packaging options for easy and cost effective installation

SINGLE-SOURCE SUPPLIER
- Fully prototype tested with certified torsional vibration analysis available

WORLDWIDE PRODUCT SUPPORT
- Cat dealers provide extensive post sale support including maintenance and repair agreements
- Cat dealers have over 1,800 dealer branch stores operating in 200 countries
- The Cat® S•O•S℠ program cost effectively detects internal engine component condition, even the presence of unwanted fluids and combustion by-products

CAT® 3516C TA DIESEL ENGINE
- Reliable, rugged, durable design
- Field-proven in thousands of applications worldwide
- Four-stroke-cycle diesel engine combines consistent performance and excellent fuel economy with minimum weight

CAT GENERATOR
- Matched to the performance and output characteristics of Cat engines
- Industry leading mechanical and electrical design
- Industry leading motor starting capabilities
- High Efficiency

CAT EMCP 4 CONTROL PANELS
- Simple user friendly interface and navigation
- Scalable system to meet a wide range of customer needs
- Integrated Control System and Communications Gateway

SEISMIC CERTIFICATION
- Seismic Certification available
- Anchoring details are site specific, and are dependent on many factors such as generator set size, weight, and concrete strength.
  IBC Certification requires that the anchoring system used is reviewed and approved by a Professional Engineer
- Seismic Certification per Applicable Building Codes: IBC 2000, IBC 2003, IBC 2006, IBC 2009, CBC 2007
- Pre-approved by OSHP and carries an OPA#(OSP-0084-01) for use in healthcare projects in California

STANDBY 2000 ekW 2500 kVA

60 Hz 1800 rpm 480 Volts

FACTORY INSTALLED STANDARD & OPTIONAL EQUIPMENT

System	Standard	Optional
Air Inlet	• Single element canister type air cleaner • Service indicator	[ ] Dual element & heavy duty air cleaners [ ] Air inlet adapters & shut-off
Cooling	• Radiator with guard • Coolant drain line with valve • Fan and belt guards • Cat® Extended Life Coolant*	[ ] Radiator duct flange [ ] Jacket water heater
Exhaust	• Dry exhaust manifold • Flanged faced outlets	[ ] Mufflers and Silencers [ ] Stainless steel exhaust flex fittings [ ] Elbows, flanges, expanders & Y adapters
Fuel	• Secondary fuel filters • Fuel priming pump • Flexible fuel lines • Fuel cooler*	[ ] Water separator [ ] Duplex fuel filter
Generator	• Class H insulation • Cat digital voltage regulator (CDVR) with kVAR/PF control, 3-phase sensing • Winding temperature detectors • Anti-condensation heaters • Reactive Droop	[ ] Oversize & premium generators [ ] Bearing temperature detectors
Power Termination	• Bus bar (NEMA or IEC mechanical lug holes)- right side standard • Top and bottom cable entry	[ ] Circuit breakers, UL listed, 3 pole with shunt trip,100% rated, manual or electrically operated [ ] Circuit breakers, IEC compliant, 3 or 4 pole with shunt trip, manual or electrically operated [ ] Bottom cable entry [ ] Power terminations can be located on the right, left and/or rear as an option.
Governor	• ADEM™ 3	[ ] Load share module
Control Panels	• EMCP 4.2 Genset controller • User Interface panel (UIP) - rear mount • AC & DC customer wiring area (right side) • Emergency stop pushbutton	[ ] Local & remote annunciator modules [ ] Digital I/O Module [ ] Generator temperature monitoring & protection
Lube	• Lubricating oil and filter • Oil drain line with valves • Fumes disposal • Gear type lube oil pump	[ ] Oil level regulator [ ] Deep sump oil pan [ ] Electric & air prelube pumps [ ] Manual prelube with sump pump [ ] Duplex oil filter
Mounting	• Rails - engine / generator / radiator mounting • Rubber anti-vibration mounts (shipped loose)	[ ] Isolator removal [ ] Spring-type vibration isolator [ ] IBC Isolators
Starting/Charging	• 24 volt starting motor(s) • Batteries with rack and cables • Battery disconnect switch	[ ] Battery chargers (10 or 20 amp) [ ] 45 amp charging alternator [ ] Oversize batteries [ ] Ether starting aid [ ] Heavy duty starting motors [ ] Barring device (manual) [ ] Air starting motor with control & silencer
General	• Right-hand service • Paint - Caterpillar Yellow except rails and radiators are gloss black • SAE standard rotation • Flywheel and flywheel housing - SAE No. 00	[ ] CSA certification [ ] CE Certificate of Conformance [ ] Seismic Certification per Applicable Building Codes: IBC 2000, IBC 2003, IBC 2006, IBC 2009, CBC 2007 * Not included with packages without radiators
Note	Standard and optional equipment may vary for UL 2200 Listed Packages. UL 2200 Listed packages may have oversized generators with a different temperature rise and motor starting characteristics.	

STANDBY 2000 ekW 2500 kVA

60 Hz 1800 rpm 480 Volts

SPECIFICATIONS

CAT GENERATOR

Cat Generator
Frame size..... 825
Excitation..... Permanent Magnet
Pitch..... 0.6667
Number of poles.....4
Number of bearings..... Single bearing
Number of Leads..... 006
Insulation..... UL 1446 Recognized Class H with tropicalization and antiabrasion
Insulation.....Class F
- Consult your Caterpillar dealer for available voltages
IP Rating..... IP23
Alignment..... Pilot Shaft
Overspeed capability.....150
Wave form Deviation (Line to Line)..... 003.00
Voltage regulator..... 3 Phase sensing with selectible volts/Hz
Voltage regulation.....Less than +/- 1/2% (steady state)
Less than +/- 1/2% (w/3% speed change)

CAT DIESEL ENGINE

3516C ATAAC, V-16, 4-Stroke Water-cooled Diesel
Bore..... 170.00 mm (6.69 in)
Stroke..... 190.00 mm (7.48 in)
Displacement.....69.00 L (4210.64 in^3)
Compression Ratio..... 14.7:1
Aspiration..... TA
Fuel System..... Electronic unit injection
Governor Type..... ADEM3

CAT EMCP 4 SERIES CONTROLS

EMCP 4 controls including:
- Run / Auto / Stop Control
- Speed and Voltage Adjust
- Engine Cycle Crank
- 24-volt DC operation
- Environmental sealed front face
- Text alarm/event descriptions

Digital indication for:
- RPM
- DC volts
- Operating hours
- Oil pressure (psi, kPa or bar)
- Coolant temperature
- Volts (L-L & L-N), frequency (Hz)
- Amps (per phase & average)
- ekW, kVA, kVAR, kW-hr, %kW, PF

Warning/shutdown with common LED indication of:
- Low oil pressure
- High coolant temperature
- Overspeed
- Emergency stop
- Failure to start (overcrank)
- Low coolant temperature
- Low coolant level

Programmable protective relaying functions:
- Generator phase sequence
- Over/Under voltage (27/59)
- Over/Under Frequency (81 o/u)
- Reverse Power (kW) (32)
- Reverse reactive power (kVAr) (32RV)
- Overcurrent (50/51)

Communications:
- Six digital inputs (4.2 only)
- Four relay outputs (Form A)
- Two relay outputs (Form C)
- Two digital outputs
- Customer data link (Modbus RTU)
- Accessory module data link
- Serial annunciator module data link
- Emergency stop pushbutton

Compatible with the following:
- Digital I/O module
- Local Annunciator
- Remote CAN annunciator
- Remote serial annunciator

STANDBY 2000 ekW 2500 kVA

60 Hz 1800 rpm 480 Volts

TECHNICAL DATA

Open Generator Set - - 1800 rpm/60 Hz/480 Volts	DM8263	
EPA Certified for Stationary Emergency Application (EPA Tier 2 emissions levels)		
Generator Set Package Performance		
Genset Power rating @ 0.8 pf	2500 kVA	
Genset Power rating with fan	2000 ekW	
Fuel Consumption		
100% load with fan	522.5 L/hr	138.0 Gal/hr
75% load with fan	406.8 L/hr	107.5 Gal/hr
50% load with fan	293.6 L/hr	77.6 Gal/hr
Cooling System[1]		
Air flow restriction (system)	0.12 kPa	0.48 in. water
Air flow (max @ rated speed for radiator arrangement)	2480 m^3/min	87580 cfm
Engine Coolant capacity with radiator/exp. tank	475.0 L	125.5 gal
Engine coolant capacity	233.0 L	61.6 gal
Radiator coolant capacity	242.0 L	63.9 gal
Inlet Air		
Combustion air inlet flow rate	185.5 m^3/min	6550.9 cfm
Exhaust System		
Exhaust stack gas temperature	400.1 ° C	752.2 ° F
Exhaust gas flow rate	433.1 m^3/min	15294.8 cfm
Exhaust flange size (internal diameter)	203.2 mm	8.0 in
Exhaust system backpressure (maximum allowable)	6.7 kPa	26.9 in. water
Heat Rejection		
Heat rejection to coolant (total)	759 kW	43164 Btu/min
Heat rejection to exhaust (total)	1788 kW	101683 Btu/min
Heat rejection to aftercooler	672 kW	38217 Btu/min
Heat rejection to atmosphere from engine	133 kW	7564 Btu/min
Heat rejection to atmosphere from generator	107.5 kW	6113.5 Btu/min
Alternator[2]		
Motor starting capability @ 30% voltage dip	4647 skVA	
Frame	825	
Temperature Rise	130 ° C	234 ° F
Lube System		
Sump refill with filter	401.3 L	106.0 gal
Emissions (Nominal)[3]		
NOx g/hp-hr	5.45 g/hp-hr	
CO g/hp-hr	.3 g/hp-hr	
HC g/hp-hr	.11 g/hp-hr	
PM g/hp-hr	.025 g/hp-hr	

[1] For ambient and altitude capabilities consult your Cat dealer. Air flow restriction (system) is added to existing restriction from factory.

[2] Generator temperature rise is based on a 40 degree C ambient per NEMA MG1-32. UL 2200 Listed packages may have oversized generators with a different temperature rise and motor starting characteristics.

[3] Emissions data measurement procedures are consistent with those described in EPA CFR 40 Part 89, Subpart D & E and ISO8178-1 for measuring HC, CO, PM, NOx. Data shown is based on steady state operating conditions of 77ºF, 28.42 in HG and number 2 diesel fuel with 35º API and LHV of 18,390 btu/lb. The nominal emissions data shown is subject to instrumentation, measurement, facility and engine to engine variations. Emissions data is based on 100% load and thus cannot be used to compare to EPA regulations which use values based on a weighted cycle.

RATING DEFINITIONS AND CONDITIONS

Meets or Exceeds International Specifications: AS1359, CSA, IEC60034-1, ISO3046, ISO8528, NEMA MG 1-22, NEMA MG 1-33, UL508A, 72/23/EEC, 98/37/EC, 2004/108/EC

Standby - Output available with varying load for the duration of the interruption of the normal source power. Average power output is 70% of the standby power rating. Typical operation is 200 hours per year, with maximum expected usage of 500 hours per year. Standby power in accordance with ISO8528. Fuel stop power in accordance with ISO3046. Standby ambients shown indicate ambient temperature at 100% load which results in a coolant top tank temperature just below the shutdown temperature.

Ratings are based on SAE J1349 standard conditions. These ratings also apply at ISO3046 standard conditions. **Fuel rates** are based on fuel oil of 35° API [16° C (60° F)] gravity having an LHV of 42 780 kJ/kg (18,390 Btu/lb) when used at 29° C (85° F) and weighing 838.9 g/liter (7.001 lbs/U.S. gal.). Additional ratings may be available for specific customer requirements, contact your Cat representative for details. For information regarding Low Sulfur fuel and Biodiesel capability, please consult your Cat dealer.

DIMENSIONS

Package Dimensions		
Length	**6424.6 mm**	**252.94 in**
Width	**2378.1 mm**	**93.63 in**
Height	**2966.3 mm**	**116.78 in**

NOTE: For reference only - do not use for installation design. Please contact your local dealer for exact weight and dimensions. (General Dimension Drawing #2846051).

2012 Caterpillar
All rights reserved.

Materials and specifications are subject to change without notice. The International System of Units (SI) is used in this publication.

CAT, CATERPILLAR, their respective logos, "Caterpillar Yellow," the "Power Edge" trade dress, as well as corporate and product identity used herein, are trademarks of Caterpillar and may not be used without permission.

Confidential Supporting Documentation

Appendix E

July 2013
Project No. 0189555

Environmental Resources Management
15810 Park Ten Place, Suite 300
Houston, Texas 77084
(281) 600-1000

Appendix E is confidential and can be found in the
Confidential version of this report.