Emission Factor Documentation for AP-42
Section 9.2.1

Fertilizer Application

Draft Report

For U.S. Environmental Protection Agency
Office of Air Quality Planning and Standards
Emission Factor and Inventory Group

EPA Purchase Order No. 8D-1933-NANX

MRI Project No. 4945

June 1998

Emission Factor Documentation for AP-42
Section 9.2.1

Fertilizer Application

Draft Report

For U.S. Environmental Protection Agency
Office of Air Quality Planning and Standards
Emission Factor and Inventory Group
Research Triangle Park, NC 27711

Attn: Mr. Dallas Safriet (MD-14)

EPA Purchase Order No. 8D-1933-NANX

MRI Project No. 4945

June 1998

NOTICE

This document is a preliminary draft. It has not been formally released by the U. S. Environmental Protection Agency and should not at this stage be construed to represent Agency policy. It is being circulated for comments on its technical merit and policy implications.

PREFACE

This report was prepared by Midwest Research Institute (MRI) for the Office of Air Quality Planning and Standards (OAQPS), U. S. Environmental Protection Agency (EPA), under Contract No. 68-D2-0159, Work Assignment No. 4604-04 and Purchase Order No. 8D-1933-NANX. Mr. Dallas Safriet was the requester of the work.

Approved for:
MIDWEST RESEARCH INSTITUTE

Roy Neulicht
Program Manager
Environmental Engineering
Department

Jeff Shular, Director
Environmental Engineering
Department

June 1998

TABLE OF CONTENTS

Page

1. INTRODUCTION 1-1

2. INDUSTRY DESCRIPTION 2-1
2.1 INDUSTRY CHARACTERIZATION 2-1
2.2 METHODS OF APPLICATION 2-2
2.2.1 Application of Gaseous Fertilizers 2-2
2.2.2 Application of Fluid Fertilizers 2-3
2.2.3 Application of Solid Fertilizers 2-5
2.3 EMISSIONS 2-6
2.3.1 Emission Mechanisms 2-6
2.3.2 Particulate Matter 2-6
2.3.3 Gaseous Air Emissions 2-7
2.4 EMISSION CONTROL TECHNOLOGY 2-13

3. GENERAL DATA REVIEW AND ANALYSIS PROCEDURES 3-1
3.1 LITERATURE SEARCH AND SCREENING 3-1
3.2 DATA QUALITY RATING SYSTEM 3-2
3.3 EMISSION FACTOR QUALITY RATING SYSTEM 3-3
3.4 EMISSION TESTING METHODS FOR FERTILIZER APPLICATION 3-4
3.4.1 Sampling Methods 3-4
3.4.2 Analytical Methods 3-6

4. AP-42 SECTION DEVELOPMENT 4-1
4.1 REVIEW OF SPECIFIC DATA SETS 4-1
4.1.1 Reference 1 4-1
4.1.2 Reference 2 4-2
4.1.3 Reference 3 4-3
4.1.4 Reference 4 4-3
4.1.5 Reference 5 4-4
4.1.6 Reference 6 4-4
4.1.7 References 7 and 8 4-5
4.1.8 Reference 9 4-5
4.1.9 Reference 10 4-6
4.1.10 Reference 11 4-7
4.1.11 Reference 12 4-7
4.1.12 Reference 13 4-8
4.1.13 Reference 14 4-8
4.1.14 Reference 39 4-9
4.1.15 Reference 41 4-9
4.1.16 Reference 43 4-10
4.2 DEVELOPMENT OF CANDIDATE EMISSION FACTORS 4-10
4.2.1 Analysis of Experimental Data 4-10
4.2.2 Candidate Emission Factors 4-12

5. PROPOSED AP-42 SECTION 9.2.1 5-1

TABLE OF CONTENTS (continued)

Page

Appendices

A. Reference 1 and associated hand calculations A-1
B. Reference 2 and associated hand calculations B-1
C. Reference 3 and associated hand calculations C-1
D. Reference 4 and associated hand calculations D-1
E. Reference 5 and associated hand calculations E-1
F. Reference 6, associated hand calculations, and supporting documentation F-1
G. References 7 and 8, associated hand calculations, and supporting documentation G-1
H. Reference 9, associated hand calculations, and supporting documentation H-1
I. Reference 10, associated hand calculations, and supporting documentation I-1
J. Reference 11 and associated hand calculations J-1
K. Reference 12, associated hand calculations, and supporting documentation K-1
L. Reference 13 and associated hand calculations L-1
M. Reference 14 and associated hand calculations M-1
N. Reference 39 and associated hand calculations N-1
O. Reference 41 and associated hand calculations O-1
P. Reference 43 and associated hand calculations P-1

LIST OF FIGURES

Number		Page
2-1	Diagram of a typical metering system for anhydrous ammonia application	2-18
2-2	Typical trailer for application of anhydrous ammonia and fluid fertilizers	2-19
2-3	Typical tilling blades with injection tube	2-20
2-4	Side view and rear view of a typical spray nozzle system used for broadcast application of fluid fertilizers	2-22
2-5	Typical "banding" application for fluid fertilizers	2-23
2-6	Centrifugal spreader for solid fertilizers	2-24
2-7a	Emission points for gaseous fertilizers	2-25
2-7b	Emission points for ground application of liquid fertilizers	2-25
2-7c	Emission points for irrigation application of liquid fertilizer	2-25
2-7d	Emission points for ground application of solid fertilizers	2-26
2-7e	Emission points for aerial application of fluid and solid fertilizers	2-26
2-8	Nitrogen cycle	2-27
2-9	Sulfur cycle	2-28
3-1	Diagram of static air sample collection	3-9
3-2	Diagram of the original chamber sample collection apparatus	3-10
3-3	Typical canopy for sample collection	3-11

LIST OF TABLES

Number		Page
2-1	TOP 10 STATES IN AGRICULTURAL FERTILIZER CONSUMPTION IN 1994	2-16
2-2	AGRICULTURAL SOURCES OF TRACE ELEMENT CONTAMINATION IN SOILS	2-17
3-1	QUANTITATIVE ANALYTICAL METHODS FOR AIR EMISSIONS	3-12
4-1	DOCUMENTS REJECTED FOR EMISSION FACTOR DEVELOPMENT	4-19
4-2	DEVELOPMENT OF EMISSION FACTORS FOR IMMEDIATE EMISSIONS FROM THE APPLICATION OF ANHYDROUS AMMONIA	4-21
4-3	DEVELOPMENT OF LATENT EMISSION FACTORS FOR THE APPLICATION OF NITROGEN FERTILIZERS	4-22
4-4	EQUIVALENT NITROGEN CONTENTS OF COMMON CHEMICAL FERTILIZERS	4-25
4-5	SUMMARY OF EMISSION FACTORS FOR FERTILIZER APPLICATION	4-26

EMISSION FACTOR DOCUMENTATION FOR AP-42 SECTION 9.2.1

Fertilizer Application

1. INTRODUCTION

The document *Compilation of Air Pollutant Emission Factors* (AP-42) has been published by the U. S. Environmental Protection Agency (EPA) since 1972. Supplements to AP-42 have been routinely published to add new emission source categories and to update existing emission factors. AP-42 is routinely updated by EPA to respond to new emission factor needs of EPA, State and local air pollution control programs, and industry.

An emission factor is a representative value that attempts to relate the quantity of a pollutant released to the atmosphere with an activity associated with the release of that pollutant. Emission factors usually are expressed as the weight of pollutant divided by the unit weight, volume, distance, or duration of the activity that emits the pollutant. The emission factors presented in AP-42 may be appropriate to use in a number of situations, such as making source-specific emission estimates for areawide inventories for dispersion modeling, developing control strategies, screening sources for compliance purposes, establishing operating permit fees, and making permit applicability determinations. The purpose of this report is to provide background information from test reports and other information to support preparation of AP-42 Section 9.2.1, Fertilizer Application.

This background report consists of five sections. Section 1 includes the introduction to the report. Section 2 gives a description of fertilizer application. It includes a characterization of the industry, a description of the different methods of application, a characterization of emission sources and pollutants emitted, and a description of the technology used to control emissions resulting from these sources. Section 3 is a review of emission data collection and emission measurement procedures. It describes the literature search, the screening of emission data reports, and the quality rating system for both emission data and emission factors. Section 4 details how the new AP-42 section was developed. It includes the review of specific data sets and a description of how candidate emission factors were developed. Section 5 presents the AP-42 Section 9.2.1, Fertilizer Application. Appendices A through P include references, supporting documentation, and calculations used to determine the emission factors.

2. INDUSTRY DESCRIPTION

This section includes a brief discussion of chemical fertilizer consumption in the United States and the basic application methods used for fertilizer in gaseous, fluid, or solid form. Particulate and gaseous air emissions generated during the application of chemical fertilizers are discussed in relationship to naturally occurring soil-based biological/chemical reactions, other biological activities, fertilizer application variables, soil conditions, and climate.

2.1 INDUSTRY CHARACTERIZATION[1-5]

Fertilizer production industries include manufacturers of fertilizer plant food (SIC 2871), nitrogen and organic fertilizers (SIC 2873), phosphate, potash, and other fertilizers (SIC 2874), and pesticides and other agricultural chemicals (SIC 2879). Fertilizers are distributed through agricultural supply retailers, farmer cooperatives, and custom fertilizer dealers. There are an estimated 13,000 retail fertilizer businesses providing bulk blended, fluid-mix, and bagged fertilizers. Application is performed by farmers and by fertilizer dealers using specialized application equipment.

Demand for fertilizer has seen moderate growth in recent years. Growth in production was approximately 6 percent between 1993 and 1994. Of the total 45.1 million megagrams (Mg) (49.6 million tons) sold in 1994, 51.7 percent was dry bulk fertilizer, 40.7 percent was fluid fertilizer, and 7.6 percent was dry bagged fertilizer. Total usage in 1994 was:

- Dry bulk fertilizers, 23.3 million Mg (25.6 million tons)
- Fluid fertilizers (including anhydrous ammonia), 18.4 million Mg (20.2 million tons)
- Dry bagged fertilizers, 3.5 million Mg (3.8 million tons)

Consumption data for the top 10 states in agricultural single and multiple nutrient fertilizer consumption as of June 30, 1994 are presented in Table 2-1. These 10 states account for approximately 53 percent of agricultural fertilizer sales in the United States.

Once the fertilizer has been sold, fertilizer is applied by various means to crop producing fields. Uncontrolled emissions are generated by the application process (immediate emissions) as well as by the soil reactions with the fertilizer (latent emissions). These uncontrolled emissions are affected by the method of application and the chemical and biological reactions within the soil. Immediate emissions include ammonia

(NH_3), particulate matter (PM), and the volatilized fertilizer. Latent emissions may include NH_3, nitrous oxide (N_2O), NO_x ($NO + NO_2$), sulfur dioxide (SO_2), PM, and the volatilized fertilizers. No data exist for the volatilized fertilizer, SO_2, and PM emissions. Gaseous emissions from phosphorus containing fertilizer application are expected to be low as compared to the gaseous emissions from nitrogen containing and sulfur containing fertilizers.

Recent scientific papers discussing the biological mechanisms for NO_x emissions from the soil have cited evidence to show that essentially all (over 90 percent) NO_x emissions are in the form of NO and little, if any, are in the form of NO_2. The formation of NO_2 occurs through the rapid oxidation of the NO by ozone present in the soil or the air immediately above the soil surface. There is no evidence to conclude that appreciable quantities of NO_2 are formed directly in the soil.

2.2 METHODS OF APPLICATION[4,6,7]

Although many types of fertilizers are manufactured, the basic application methods depend on whether the fertilizer is in gaseous, fluid, or solid form. Methods for application of each of these three forms of fertilizer are discussed below.

2.2.1 Application of Gaseous Fertilizers

Anhydrous NH_3 is the only fertilizer that is a gas at room temperature (with compression and cooling, it becomes a liquid that is about 60 percent as dense as water). Approximately 8.3 million Mg (9.1 million tons) of anhydrous NH_3 are produced annually. Of that amount, approximately 5.2 million Mg (5.7 million tons) are applied to croplands; the remainder is used to manufacture other nitrogen fertilizers. Anhydrous NH_3 is the most economical form of nitrogen available to the farmer. It is readily absorbed in water up to concentrations of 30 percent to 40 percent by weight, depending on the temperature. Anhydrous NH_3 is the most concentrated nitrogen fertilizer available, with 82 percent nitrogen. Because NH_3 can be dissolved in water (aqua ammonia), it can be applied directly to soil or indirectly through irrigation systems. However, the primary application method is via direct soil injection of anhydrous NH_3 as described below.

Anhydrous NH_3 is stored as a liquid under pressure and is applied by injection into the soil. The liquified NH_3 quickly vaporizes into a gas, but is captured by soil components including water, clay, and other minerals. The equipment used generally consists of a vehicle (usually a tractor); a pressurized tank mounted on a trailer and filled with anhydrous NH_3; a metering system; and a distribution manifold with

applicator knives and tube holders. Critical components of the injection system are the metering assembly and the tube holder.

The metering system consists of a control board, usually located in the cab of the vehicle, a connection to the speedometer of the vehicle, and an NH_3 meter located near the tank. This meter may consist of a variable orifice meter or a piston pump. With a variable orifice meter system, the rate of application is determined by the speed of the tractor, the swath width, and the size of the orifice. With the piston pump system, the rate of application is determined by the piston stroke length. Several metering systems currently in use include a feedback loop to verify movement of the vehicle with a ground movement sensor. Figure 2-1 is a schematic drawing of a simplified NH_3 metering system. The metering system is designed so that it is activated only when the vehicle is moving.

The NH_3 application system generally consists of an exit line from the pressurized tank (nurse tank) to the manifold, which feed the applicator tubes located immediately behind the applicator knives in the tilling trailer. Each knife and tube assembly can be placed at a depth ranging from 10 to 25 centimeters (cm) (4 to 10 inches [in.]) below the surface of the soil. Figure 2-2 shows one example of a simplified trailer used to apply anhydrous NH_3 and fluid fertilizers. Frequently, an application of a second fertilizer occurs simultaneously using a depth setting of 10 cm (4 in). Figure 2-3 shows four of the possible placements of applicator knives and injection tube(s) for both single and dual application. The spacing between application rows is between 30 and 45 cm (12 and 18 in), depending on the tilling trailer.

The amount of fertilizer to be applied is calibrated prior to use, based on the size of the nozzle orifices and the characteristics of the pumping system, which vary by manufacturer. After the nozzles are installed, the application of fertilizer can be calibrated based on the change of pressure within the tank and the flow control setting.

2.2.2 Application of Fluid Fertilizers

Fluid fertilizers include liquid solutions, suspensions, and slurries. Liquid solution fertilizers contain water-soluble nutrients at high concentrations, usually prepared as a mixture of nitrogen, phosphorus, and potassium (NPK) components; they are also known as liquid mixed fertilizers. Suspension fertilizers are fluid mixtures of solid and liquid materials in which the solids do not settle rapidly and can be redispersed readily with agitation to give a uniform mixture. Slurry fertilizers are fluid mixtures of solid and liquid materials in which the solids settle rapidly in the absence of agitation to form a firm layer that is difficult to

resuspend. Examples of slurries include precipitation of fluid fertilizers resulting from storage for prolonged periods of very cold weather, application of elemental sulfur, and mixing of ammonium nitrate and potassium chloride to saturation leading to salting out of potassium nitrate.

The three general application methods for fluid fertilizers are aerial, irrigation, and ground application. Occasionally, aerial application of fertilizers, which is more expensive than ground application is used because it is quicker or because wet soil precludes tractor use. Irrigation application is used in areas like the southwest that make extensive use of irrigation in crop production. Irrigation application can apply fertilizers at a frequent, diluted rate. Because use of aerial and irrigation techniques are less common than ground applications and because emission data are unavailable for those two methods, the discussion below focuses on ground application.

Four different methods of ground application are used: broadcast, band, row, and deep banding (injection).

- In the broadcast application, fluid fertilizers are broadcast by high flotation applicators. High flotation applicators usually have up to 20 nozzles equally spaced and positioned several feet above the ground (see diagram in Figure 2-4). Broadcast application occurs at high speeds with accurately metered application rates.

- In band application, the height of the nozzles is reduced and the band width of the resultant spray is narrowed so the fluid fertilizers can be applied between rows of growing crops. Figure 2-5 shows a typical band application.

- In row application, which usually occurs at the time of planting, fluid or dry fertilizer is applied in a row near the planted seed. The distance from the fertilizer row to the seed row is dependent on the amount of fertilizer, the type of fertilizer, and the crop.

- The deep banding or injection technique is similar to that used for anhydrous ammonia. This technique is also referred to as root zone application.

The equipment used for broadcast, band, and row application of fertilizers consists of the ground vehicle, a liquid tank with fluid fertilizer, a metering system, and a distribution manifold with spray nozzles. The metering system, manifold, and the calibration system are the same as described for gaseous fertilizers in

Section 2.2.1. The optional port for liquid fertilizer is shown in Figure 2-1. The metering system (not shown) is similar to that for anhydrous ammonia, except that the pressure valve is replaced with a tank volume controller, and the piston pump is usually a centrifugal pump.

The major differences in the distribution manifolds for gaseous and fluid fertilizers are the size of booms and the types of spray nozzles. The manifolds are usually composed of two 6- to 20-meter (m) (20 to 65-foot [ft]) booms with nozzles set on 51- to 152-cm (20-in to 60-in.) centers with no more than 20 nozzles. Several varieties of nozzles can be used depending on the application method. By varying the type and height of the nozzles and the flow rate, fluid fertilizer can be applied in overlapping coverage for broadcast application or in discrete bands for band/row application.

The ground equipment used for deep band application of fertilizers is the same as described in Section 2.2.1. Typically, a phosphate fertilizer and ammonia are banded together in a "dual application" method.

2.2.3 Application of Solid Fertilizers

Solid fertilizers can be applied using a broadcast technique by aircraft or by high flotation applicator. Because no emission data were found for aerial application, the discussion focuses on high flotation application. Note however, that irrespective of application method, solid fertilizers are frequently mixed with herbicides in order to reduce the expense of a second application.

The equipment for broadcast application of solid fertilizers by high flotation applicator consists of the vehicle, a hopper containing solid fertilizer, a metering system, and the distribution manifold. The metering and calibration systems are generally the same as those described in Section 2.2.1 for gaseous fertilizer application. Centrifugal and boomed spreaders are used to broadcast solid fertilizers.

A centrifugal spreader is composed of one or two spinning disks which broadcast fertilizer in 12- to 15-m (39- to 50-ft) swaths. Figure 2-6 shows an example of a centrifugal spreader with a double spinner applicator. A spread pattern calibration is an essential part of applicator maintenance. Possible adjustments include positioning the spinner blades, positioning where the fertilizer drops on the spinner blades, changing the spinner speed, and changing the fertilizer particle size.

Two types of boomed spreaders are available and both look similar to the fluid fertilizer broadcast system shown in Figure 2-4. One type moves fertilizer by an auger through the boom and can supply up to 4 nozzles. Another moves fertilizer with high velocity air to as many as 20 nozzles. Each nozzle has a deflector to distribute the fertilizer. Nozzles can spread fertilizer in an arc pattern from 0.15 m to 3.7 m (0.5 to 12 ft) in diameter.

2.3 EMISSIONS[7-14]

Both PM and gaseous air emissions are generated as a result of the application of chemical fertilizers. Emissions may occur during application, shortly after application, and for extended periods following application.

2.3.1 Emission Mechanisms

Emissions from the application of fertilizer generally are attributed to four different mechanisms: (1) soil reactions with the applied fertilizer generating increased gaseous emissions including NO_x, N_2O, NH_3, and SO_2; (2) volatilization of the fertilizer immediately behind the vehicle generating gaseous emissions of NH_3 and the fertilizer itself, (3) soil disturbance generating PM emissions where soil particles and other materials in the soil become airborne, and (4) volatilization of the fertilizer immediately above the solid fertilizer trailer generating gaseous emissions of NH_3 and other fertilizers. Emissions attributed to the first mechanism are often called latent emissions, while those attributed to the other three mechanisms are called immediate emissions. The specific emission points associated with these mechanisms are illustrated in Figures 2-7a through 2-7e for gaseous fertilizer application, ground application of fluid fertilizers, irrigation application of fluid fertilizers, ground application of solid fertilizers, and aerial application of fluid and solid fertilizers, respectively.

Emissions that result from the reactions between the soil and the applied fertilizer are believed to be higher than emissions that result from the other three mechanisms. Consequently, most of the data available on emissions from fertilizer application are estimates of emissions from soil-fertilizer reactions.

2.3.2 Particulate Matter

Particulate matter emissions of solid fertilizer compounds are primarily generated along with wind-blown dust during broadcast application. Constituents of gaseous, fluid, or solid fertilizers and manure (or

their reaction products) attached to soil particles may also become airborne much later as a result of soil disturbances caused by wind (i.e., wind erosion) or mechanical operations (e.g., tilling). These emissions are associated with mechanism (3) in Section 2.3.1.

Particulate matter emissions from fertilizers or manures have not been characterized in the literature. However, heavy elements listed as Hazardous Air Pollutants (HAP's) in the 1990 Clean Air Act Amendments have been identified in soils treated with various types of fertilizers. Table 2-2 provides a summary of data obtained from a variety of investigators and compiled by Kabata-Pendias and Pendias for trace elements in fertilizer-treated soil. A number of these elements are listed HAP's.

2.3.3 Gaseous Air Emissions[5-18,21-23]

Gaseous air emissions from fertilizer application can occur either immediately, as a result of the volatilization of the fertilizer itself, or after a period of time, as a result of the biological/chemical transformation of the fertilizer and subsequent release of gases to the atmosphere. The transformation products are generally oxidized forms of either nitrogen, sulfur, or phosphorus. Data on emissions related to the application of micronutrients, which are trace elements such as boron, chlorine, copper, iron manganese, sodium, molydenum and zinc that are essential for plant growth, are insufficient to permit an analysis, so they are not discussed.

Because emissions from fertilizer application are generated via the four primary mechanisms stated in Section 2.3.1 and because emission rates associated with each of these four mechanisms are affected by a variety of physical, chemical, and biological processes, characterizing emission rates for a particular application scenario or time period is complicated. The subsections below present an overview of five classes of factors that are described in the literature as affecting emissions. These five broad classes are biological and chemical reactions in the soil; other biological activities; soil conditions; climate; and nutrient management (the form, placement, and timing of fertilizer application).

Because of the complexity of the emission mechanisms and the interaction of many of the factors, data are insufficient to estimate the magnitude of the effects of most of the factors. Consequently, the discussion below presents a comprehensive but qualitative review of the information on emission mechanisms contained in the literature. While quantitative data are not available for most factors, the data collected at a number of sites generally show consistent effects of substantial magnitude for two factors--soil moisture content and temperature. For most fertilizers, it is believed that emissions increase significantly as

moisture contents are raised via rainfall or irrigation. Also, emissions are directly related to ambient temperatures. Hourly emission rates exhibit diurnal patterns that follow temperature patterns, and emissions are higher during summer months. The effects of both temperature and moisture are interrelated with other biological and chemical factors discussed below.

2.3.3.1 Biological and Chemical Reactions Affecting Air Emissions from Fertilizer. Naturally occurring biological and chemical reactions in the soil that affect air emissions from fertilizer application are primarily related to either the nitrogen cycle (Figure 2-8) or the sulfur cycle (Figure 2-9), depending on the type of fertilizer applied. These reactions generate four gases (N_2O, NO, NO_2, and SO_2) that can have an adverse effect on air quality when their concentrations are higher than can be maintained in the soil by the natural equilibrium between the soil and air. Both the nitrogen and sulfur cycles are part of a complex overall equilibrium between inorganic and organic solids, air, water, and microorganisms. When one or more of these reactions is affected, the entire equilibrium is also affected. Biological and chemical reactions are associated with mechanism (1) discussed in Section 2.3.1.

Biological Reactions: For several elements, notably carbon, nitrogen, and sulfur, microbial reactions almost totally determine the soil reaction rates. Biochemical and microbial reactions are primarily catalytic processes affected by soil mineral composition, climate, gas exchange with the atmosphere, and energy from photosynthesis. Three gases (NH_3, N_2O, and hydrogen sulfide [H_2S]) that are precursors to the gases noted above are generated from three separate biological processes: nitrogen fixation, denitrification, and the hydrogen sulfide reaction. A brief summary of these processes and the factors that affect them follow.

Nitrogen fixation — Nitrogen fixation is a process that reduces elemental nitrogen (N_2) from the atmosphere to NH_3 through a series of reactions catalyzed by soil microflora (see Figure 2-8). Factors that affect nitrogen fixation include the presence and type of organotropic bacteria, the presence or absence of air (or oxygen) in the soil matrix as related to the bacteria, the photosynthetic capability of bacteria and algae, and the absence of hydrogen gas. Additional information may be found in References 8, 9, 17, and 23.

Denitrification/nitrification — Denitrification is a process that reduces nitrates to nitrogen in one or more reaction steps. One reaction produces N_2O. The reverse process, which is called nitrification, starts with either NH_3 or N_2 and oxidizes it to nitrates through a series of reactions. Different microflora and molecular oxygen (O_2) are required for nitrification. Factors that affect nitrification and denitrification include the microflora, level of oxygen in the soil, the moisture content of the soil, the temperature, and the available food energy sources for the microbes. Available information indicates that both nitrification and

denitrification contribute to soil nitrogen compound emissions. Additional information may be found in References 5, 6, 11, 12, 13, 17, and 23.

Hydrogen sulfide — Under anaerobic conditions, sulfates are reduced to H_2S. Factors that increase the generation of hydrogen sulfide include flooding, presence of sulfur reducing bacteria, and the absence of oxygen. Additional information may be found in References 11, 14, 15, 17, and 23.

Chemical Reactions: The chemical reactions of fertilizers with soil are usually a series of reactions that occur under conditions closely related to those affecting the presence of microflora. This section summarizes the factors that affect emissions as they are related to the fertilizer. Three specific processes are discussed: NH_3 volatilization, reduction of nitrates, and reduction of sulfates.

Ammonia Volatilization — Ammonium is normally stored in soil as a complex with carbonate ions or sulfate ions and is readily absorbed by plant roots. Ammonia volatilizes more readily when the soil lacks these anions. Ammonia volatilization also increases with flooding, high soil pH, the presence of high levels of calcium, and high or elevated temperatures. Flooding mobilizes the NH_3 and carries it to the surface where it is readily volatilized into the atmosphere. Soils with high pH (basic soils) react with ammonium ions to generate water and NH_3 gas. Calcium forms insoluble precipitates with sulfates and carbonates, thus reducing the anions available for complexing with ammonium ions. Ammonia emissions also increase with temperature. Under drying conditions, especially with increasing wind speed, soils with high moisture content enhance NH_3 volatilization, especially with urea-containing materials.

Reduction of Nitrates — Generally, nitrate is a soluble anion found in the soil solution and is readily absorbed by plant roots. However, these nitrate compounds can undergo reduction reactions to produce less soluble oxides of nitrogen and increase emissions of NO_x. The magnitude and rate of nitrate reduction in soils is increased with increasing quantities of decomposable organic matter, soil moisture content (decreasing soil aeration), soil pH, soil temperature, and soil nitrate content.

Reduction of Sulfates — Sulfates are loosely bound to the soil as salts and are readily absorbed by plant roots. However, chemical reduction of these sulfates to SO_2 or H_2S act to increase sulfur-related emissions. Factors that increase sulfur-related emissions by increasing the rate of these reduction reactions include flooding, the presence of key minerals and other anions, the concentration of sulfate ions, the type of clay and clay content in the soil, and the type and quantity of soil organic matter. In general, the presence of

more tightly bound anions within the soil increases sulfur-related emissions because of the reduced concentration of available cations.

2.3.3.2 Other Biological Activities. Because most emissions from fertilizer application are related to the ecological and chemical reactions related to the sulfur and nitrogen cycles, any biological factor that influences these biological and chemical reactions can influence the quantity and rate of gaseous emissions. Three factors may result from mechanism (1) in Section 2.3.1. For example, earthworms and other soil organisms can provide channels through the soil that enhance water and nutrient transport, which in turn effect nitrification and denitrification reactions. Other biological factors that affect emissions can be related to soil microorganisms, surface plants, and animal activity at the site.

Microorganisms compete effectively with plants for available nitrogen and other nutrients. Without the application of certain nutrients, especially nitrogen, plant growth can be severely reduced because of microbial competition for nitrogen. In addition, any factor that reduces plant yield potential (pests, diseases, water and nutrient stress, and many others) will reduce recovery of applied nitrogen and may potentially increase gaseous emission of nitrogen. When the supply of nitrates is high, the presence of growing plants can enhance denitrification because the population of denitrifier microorganisms is greater than in root-free soil.

The presence of animals in grassland ecosystems enhances gaseous losses of nitrogen through volatilization and denitrification of nitrogen in urine. These losses can be greater than those observed for urea with similar nitrogen content applied to the pasture.

2.3.3.3 Soil Conditions.[4,6] Physical and chemical conditions of soil, including pH, texture, moisture content, and temperature, will affect air emissions from fertilizer application. Fine, well-aggregated soils are generally well-suited for optimum plant growth and nutrient use, and thus reduce the potential for gaseous emissions. Poorly aggregated soils with genetic or management-related hardpans (compacted soil layers) reduce root penetration and water movement and may enhance gaseous emissions. Variations in soil properties between or within fields used to quantify gaseous emissions is one reason for wide variation in many of the test results (up to 50 percent relative standard deviation [RSD]). Soil conditions are associated with emission mechanisms (1) and (3) in Section 2.3.1.

Moisture content of the soil is an important factor in emissions generation. As soil moisture content approaches saturation, the rate of denitrification greatly increases. Fluctuating soil moisture content, by

frequent irrigation or rainfall, also enhances gaseous nitrogen emissions. When soil moisture is above the maximum moisture content (the point at which the voids between soil grains are filled with water), air emissions may be reduced because ammonium and nitrate in the soil solution are diluted and also may be transported into the ground and/or surface water systems.

Because they affect biological and chemical reaction rates, soil chemical conditions also affect gaseous emissions. Important chemical properties include the soil solution pH, the cation exchange capacity (CEC) of the soil, and the concentration of nutrients in the soil that potentially could be released to the atmosphere through numerous biological and chemical reactions. The CEC is defined as the capacity of the soil to adsorb or hold cations (Ca^{+2}, Mg^{+2}, Al^{+3}, K^{+}, Na^{+}, NH_4^{+}). Soils with a high CEC will adsorb more NH_4^{+} and, thus, exhibit lower NH_3 volatilization potential than soils with a low CEC. Basic soils generally increase the release of nitrogen as NH_3 and nitrogen oxides (NO_x) (including NO and NO_2), and N_2O, and convert all other nutrients to less soluble forms. Acidic soils (<5.0-5.5 pH) reduce NO_x emissions, but also may reduce plant growth due to aluminum toxicity.

2.2.2.4 Climate. Climatic conditions that affect emission rates through their influence on biological and chemical reaction rates include moisture, temperature and wind speed. Climatic conditions can impact all four of the emission mechanisms cited in Section 2.3.1. Conditions that reduce oxygen content of the soil (increasing soil moisture, temperature changes, etc.) generally increase the emission of gas to the atmosphere above normal background levels. Even in well-aerated soils, denitrification still occurs in anaerobic microsites within soil aggregates. During short periods of saturation of the surface soil following rainfall or irrigation, the rate of denitrification greatly increases until drainage occurs and an aerated condition returns. Nitrogen and other soluble nutrients can subsequently be removed with the drainage water. Volatilization losses of nitrogen generally are enhanced when wet soils are subject to drying conditions. Increasing wind velocity enhances volatilization and under flooded conditions also increases denitrification. Ammonium volatilization increases as soil temperature rises, emissions generally increase throughout the day relative to an increase in soil temperature. Also, daily peak emissions will increase throughout the summer season as compared to the other three seasons. Denitrification also increases with rising temperature. Additional information may be found in References 7 and 23.

2.3.3.5 Nutrient Management (Form, Placement, and Timing of Fertilizer Application). In addition to influencing the quantity of nutrient absorbed or used by the plant, the nutrient source and the rate, method, and time of application can influence the magnitude and rate of gaseous emissions of the nutrient. Nutrient management can impact all four of the emission mechanisms cited in Section 2.3.1. It is important to

recognize that any source of nitrate or ammonium nitrogen in the soil can participate in biological or chemical reactions that result in the formation of nitrogen gases. For example, nitrogen mineralized from manure or legume residues can be emitted to the atmosphere by the same reactions involved with gaseous emissions from nitrogen.

Compared to other nitrogen sources, NH_3 volatilization is usually greater with urea or urea-containing fertilizers (e.g., urea, ammonium nitrate) and manures. Ammonia loss with anhydrous NH_3 is usually not significant because this source must be injected 10 to 25 cm (4 to 10 in.) below the soil surface. Generally, only small quantities of NH_3 are volatilized from ammonium-containing fertilizers (diammonium phosphate, monoammonium phosphate, ammonium sulfate, and ammonium nitrate). However, NH_3 volatilization can be significant with surface broadcast applications of diammonium phosphate and ammonium sulfate on calcareous or high pH soils. When these two fertilizers are applied to high pH soils, formation of calcium sulfate or calcium phosphate reaction products occurs, which increases the ammonium concentration in the soil solution and ultimately, the ammonium volatilization potential.

Generally, increasing the application rate increases the potential for gaseous emission and leaching of nitrogen. Therefore, identifying the correct nitrogen rate for optimum production will maximize the quantity of applied nitrogen recovered by the plant and minimize the potential environmental impact of nitrogen use. Again, this phenomenon holds for fertilizer, manure, and legume nitrogen sources (see section 2.4 for details).

Compared to surface broadcast-applied nitrogen, any nitrogen containing fertilizer or manure that is applied to the subsurface will reduce the quantity of nitrogen emitted to the atmosphere. However, gaseous emissions related to volatilization and denitrification still occur regardless of placement. In high pH soils and/or in zero tillage and reduced tillage systems (where crop residue covers the soil surface) on soils of any pH, subsurface placement of nitrogen fertilizer will enhance nitrogen recovery by the crop and reduce the potential for gaseous emissions. Surface broadcast nitrogen is usually incorporated into the soil with tillage shortly after application. Incorporation of nitrogen fertilizers will generally reduce potential gaseous emissions (especially with urea-containing sources) compared to not incorporating the nitrogen fertilizer or manure; however, with or without incorporation, nitrogen emissions are generally higher with surface broadcast nitrogen than with subsurface applications because broadcasting maximizes the quantity of soil in contact with the nitrogen.

2.4 EMISSION CONTROL TECHNOLOGY[14,20,21,24-27]

The review of the literature provided no information on control measures or on fertilizer management practices that are being used explicitly to reduce emissions of nitrogen and sulfur compounds from fertilizer application. Furthermore, because the processes that generate emissions from fertilizer application are so complex and depend on a number of soil and climatic properties via complex relationships that have not been characterized quantitatively, the emission reduction potential of alternative management practices cannot be quantified at this time. However, the best form of emission control identified to date is through appropriate "nutrient management." Here, nutrient management is defined as the form, placement, and timing of the fertilizer application relative to the crops' need for fertilizer. Again, no quantitative information is available on specific management practices, but the paragraphs below describe general approaches as they are described in the literature.

Appropriate nutrient management requires not only appropriate quantities of fertilizer but also timing of the application. Maximizing the quantity of nitrogen recovered by the plant requires that the nitrogen be applied as close to the time of maximum nitrogen demand as is possible. Therefore, split applications (part of the nitrogen is applied before planting and part is applied during an early crop growth stage) will maximize crop recovery and minimize gaseous emissions of the applied nitrogen. Since gaseous emissions can increase with increasing temperature, nitrogen application at cooler times during the year or during the day will reduce the potential for gaseous nitrogen loss.

Because a substantial quantity of emissions from fertilizer applications is related to the denitrification process, management techniques that reduce denitrification potential also will increase nitrogen utilization and decrease emissions. Additives to fertilizer nitrogen sources that reduce or inhibit nitrification or urea hydrolysis (N-Serve, DCD, and others) may reduce the potential for gaseous nitrogen emissions. Use of encapsulated calcium carbide (ECC) has been shown to be effective in the inhibition of nitrification and the reduction of N_2O and N_2 emissions from irrigated corn and wheat fields as well as flooded rice fields. It was not effective for dry land wheat fields. Details on these studies can be found in References 24, 25, and 26. Encapsulation of the fertilizer nitrogen also may significantly reduce emission losses. Considerable more research is required to identify the most effective inhibitors.

Currently, uniform nitrogen recommendations are provided for a crop grown on a given field, and nitrogen is applied at a uniform rate over the entire field. Since crop yield potential varies spatially over a field, varied nitrogen application rates would also increase nitrogen utilization. However, the technologies that facilitate variable nitrogen application to improve nitrogen use efficiency and minimize the environmental impact of nitrogen use are not generally available at this time.

Nitrogen management technologies that include placement, timing, and identification of the correct nitrogen rate are currently available through cooperative extension service or can be found in Reference 27, "Fertilizer Nitrogen Management," and References 14, 20, and 21. If these technologies are utilized to elevate the recovery of applied nitrogen by plants, the environmental release of nitrogen compounds from fertilizer application could be reduced.

REFERENCES FOR SECTION 2

1. H. L. Hargett et al., *Fertilizer Use by Class*, National Fertilizer Development Center, Muscle Shoals, AL, 1989.

2. H. L. Hargett and J. T. Berry, *Today's Retail Fertilizer Industry*, National Fertilizer Development Center, Muscle Shoals, AL, July 1988.

3. *Standard Industrial Classification Manual*, Fertilizer Application (pp. 31-33), National Technical Information Service, Springfield, VA, 1987.

4. K. Simpson, *Fertilizers and Manures*, Longman Inc., New York, 1986.

5. J. T. Berry, *Commercial Fertilizers 1994*, Environmental Research Center, Tennessee Valley Authority, Muscle Shoals, AL, December 1994.

6. O. P. Engelstad, editor, *Fertilizer Technology and Use*, Third Edition, Soil Science Society of America Inc., Madison, WI, 1985.

7. R. J. Haynes and R. R. Sherlock, "Gaseous Losses of Nitrogen," In *Mineral Nitrogen and the Plant-Soil System*, Academic Press, San Diego, CA, 1986.

8. A. Kabata-Pendias and H. Pendias, *Trace Elements in Soils and Plants*, CRC Press, Boca Raton, FL, 1984.

9. L. B. Fenn and D. E. Kissel, "Ammonia volatilization from surface applications of ammonia compounds on calcareous soils. II. Effects of temperature and rate of ammonium nitrogen application," *Soil Sci. Soc. Am. Proc.*, 38:606-610, 1974.

10. P. J. Crutzen, "Upper Limits on Atmospheric Ozone Reductions Following Increased Application of Nitrogen to the Soil," *Geophysical Letters*, 3(3):169-172, March 1976.

11. A. C. Stern, editor, *Air Pollution Standards*, Second Edition, Academy Press, New York, 1968, p. 601-718, 35-114.

12. D. H. Lenschow and B. B. Hicks (eds.), *Global Tropospheric Chemistry*, National Center for Atmospheric Research, Boulder, CO, May 1989.

13. C. C. Delwiche, "The Nitrogen Cycle," *Scientific American*, 223:137-146, 1970.

14. W. V. Bartholomew and F. E. Clark (eds.), *Soil Nitrogen*, American Society of Agronomy, Madison, WI, 1965.

15. G. L. Terman, *Atmospheric Sulphur—The Agronomic Aspects*, Technical Bulletin Number 23, The Sulphur Institute, Washington, DC, March 1978.

16. R. Perry et al. (eds.), *Acid Rain: Scientific and Technical Advances*, Publications Division, London, 1987.

17. I. R. Kennedy, *Acid Soil and Acid Rain*, Research Studies Press LTD, England, 1988.

18. R. C. Burns and R.W.F. Hardy, *Nitrogen Fixation in Bacteria and Higher Plants*, Springer-Verlang, NY, 1975.

19. J. M. Potts, ed., *Fluid Fertilizers*, Tennessee Valley Authority, Muscle Shoals, AL, Bulletin X-185, September 1984.

20. F. P. Achorn and M. F. Broder, "Mechanics of Applying Nitrogen Fertilizer," Chapter 31, *Nitrogen in Crop Production*, Madison, WI, 1984.

21. S. L. Tisdale et al., *Soil Fertility and Fertilizers*, MacMillan Publishing Company, New York, 1975.

22. H. L. Bohn et al., *Soil Chemistry*, John Wiley & Sons, New York, 1985.

23. A. F. Bouwman, ed., *Soils and the Greenhouse Effect*, Proceedings of the International Conference Soils and the Greenhouse Effect, John Wiley & Sons, New York, 1990.

24. K. F. Bronson and A. R. Mosier, "Effect of Encapsulated Calcium Carbide on Dinitrogen, Nitrous Oxide, Methane, and Carbon Dioxide Emissions from Flooded Rice," *Biology and Fertility of Soils*, 11:116-120, 1991.

25. K. F. Bronson, et al., "Nitrous Oxide Emissions In Irrigated Corn as Affected by Nitrification Inhibitors," *Journal of the Soil Science Society of America*, 56:161-165, 1992.

26 K. F. Bronson and A. R. Mosier, "Nitrous Oxide Emissions and Methane Consumption in Wheat and Corn — Cropped Systems in Northeastern Colorado," ASA Special Publication No. 55, pp. 133-144, *American Society of Agronomy*, Madison, WI.

27. R. F. Folleet, ed., *Nitrogen Management and Groundwater Protection*, "Fertilizer Nitrogen Management," Elsevier Science Pub. Co., New York, pp. 183-216.

TABLE 2-1. TOP 10 STATES IN AGRICULTURAL FERTILIZER CONSUMPTION IN 1994[a]

	State	Volume consumed (million Mg)	Volume consumed (million tons)
1.	Illinois	3.7	4.1
2.	Texas	3.2	3.5
3.	Iowa	3.0	3.3
4.	Indiana	2.4	2.6
5.	California	2.4	2.6
6.	Ohio	2.1	2.3
7.	Nebraska	2.1	2.3
8.	Minnesota	1.9	2.1
9.	Florida	1.6	1.8
10.	Kansas	1.5	1.7

[a]Source: Reference 5. As of June 30, 1994.

TABLE 2-2. AGRICULTURAL SOURCES OF TRACE ELEMENT CONTAMINATION IN SOILS[a]

Element	Sewage sludges	Phosphate fertilizers	Nitrogen fertilizers	Manure
As[b]	2–26	2–1,200	2.2–120	3–25
B	15–1,000	5–115	–	0.3–0.6
Ba	150–4,000	200	–	270
Be[b]	4–13	–	–	–
Br	20–165	3–5	185–716	16–41
Cd[b]	2–1,500	0.1–170	0.05–8.5	0.3–0.8
Ce	20	20	–	–
Co[b]	2–260	1–12	5.4–12	0.3–24
Cr[b]	20–40,600	66–245	3.2–19	5.2–55
Cu	50–3,300	1–300	< 1–15	2–60
F	2–740	8,500–38,000	–	7
Ge	1–10	–	–	19
Hg[b]	0.1–55	0.01–1.2	0.3–2.9	0.09–0.2
In	–	–	–	1.4
Mn[b]	60–3,900	40–2,000	–	30–550
Mo	1–40	0.1–60	1–7	0.05–3
Ni[b]	16–5,300	7–38	7–34	7.8–30
Pb[b]	50–3,000	7–225	2–27	6.6–15
Rb	4–95	5	–	0.06
Sc	0.5–7	7–36	–	5
Se[b]	2–9	0.5–25	–	2.4
Sn	40–700	3–19	1.4–16.0	3.8
Sr	40–360	25–500	–	80
Te	–	20–23	–	0.2
U	–	30–300	–	–
V	20–400	2–1,600	–	–
Zn	700–49,000	50–1,450	1–42	15–250
Zr	5–90	50	–	5.5

Source: Reference 8.

[a]Parts per million dry weight (µg/g). Summarized in reference 8.
[b]Listed as Hazardous Air Pollutant in 1990 Clean Air Act Amendments.

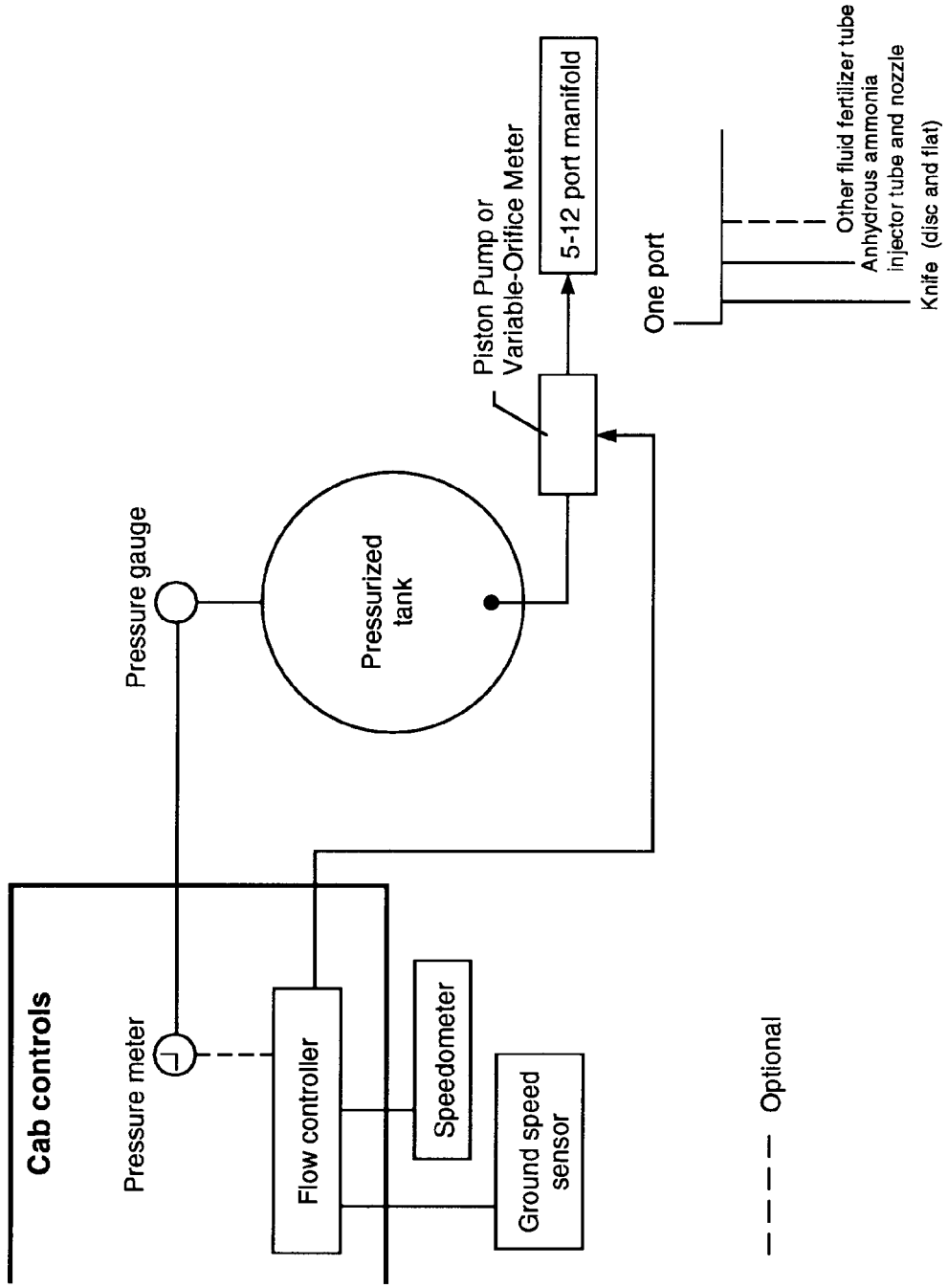

Figure 2-1. Diagram of a typical metering system for anhydrous ammonia application.

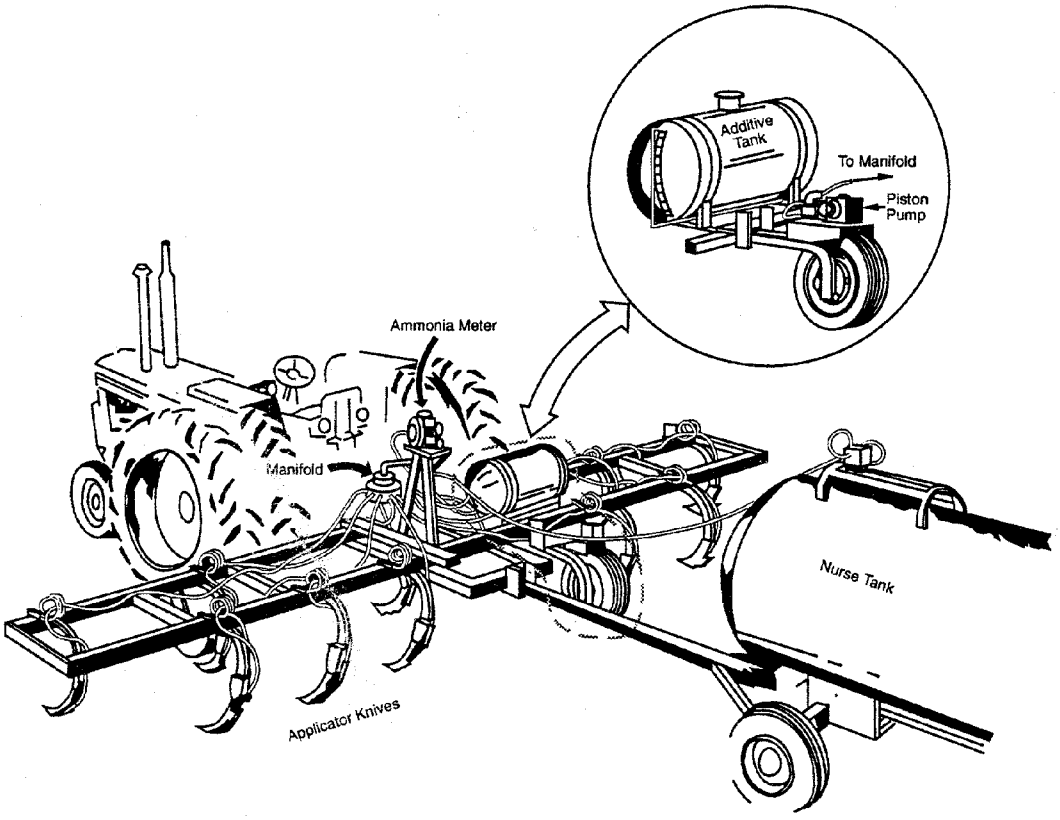

Figure 2-2. Typical trailer for application of anhydrous ammonia and fluid fertilizers.

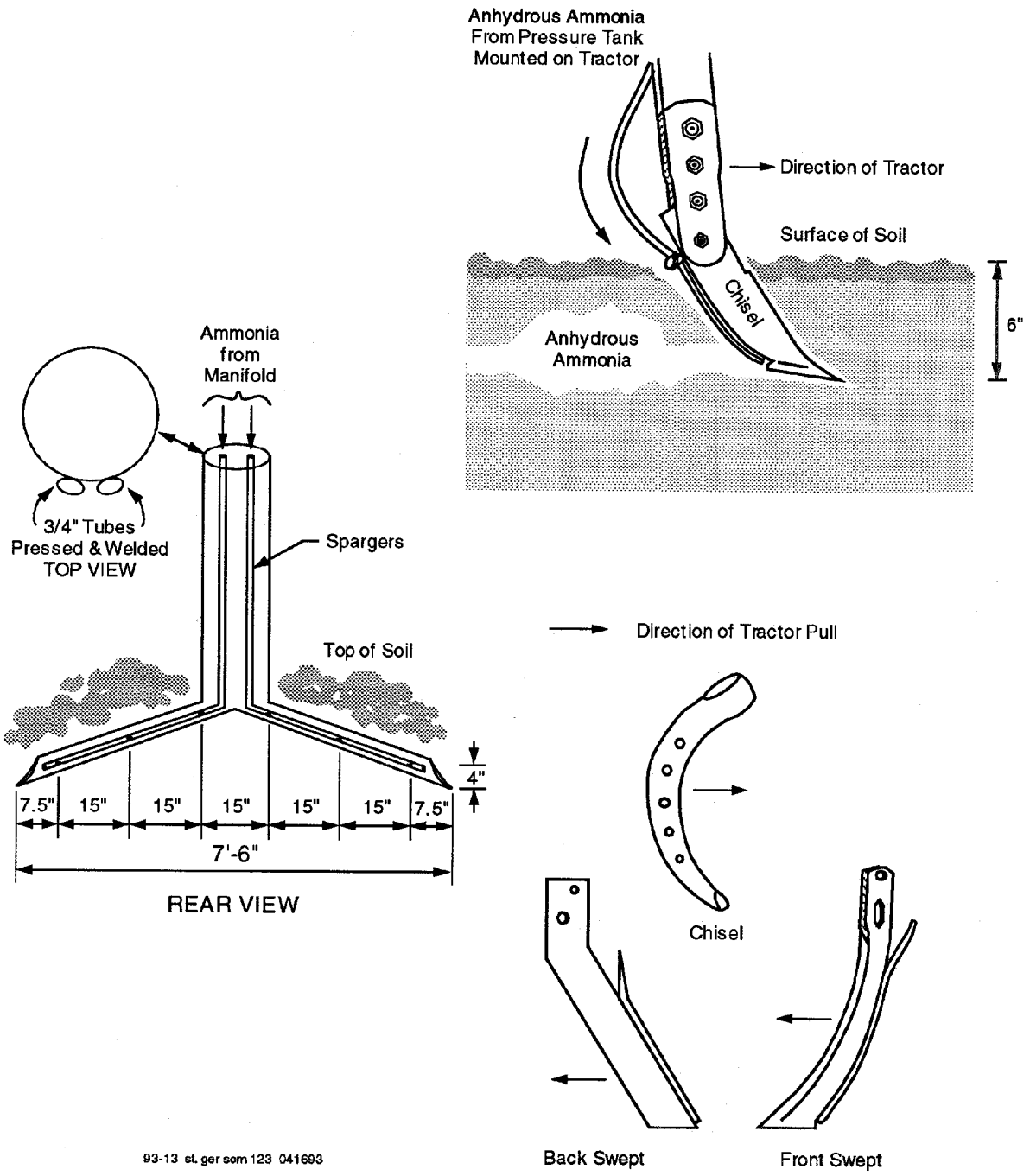

Figure 2-3. Typical tilling blades with injection tube.

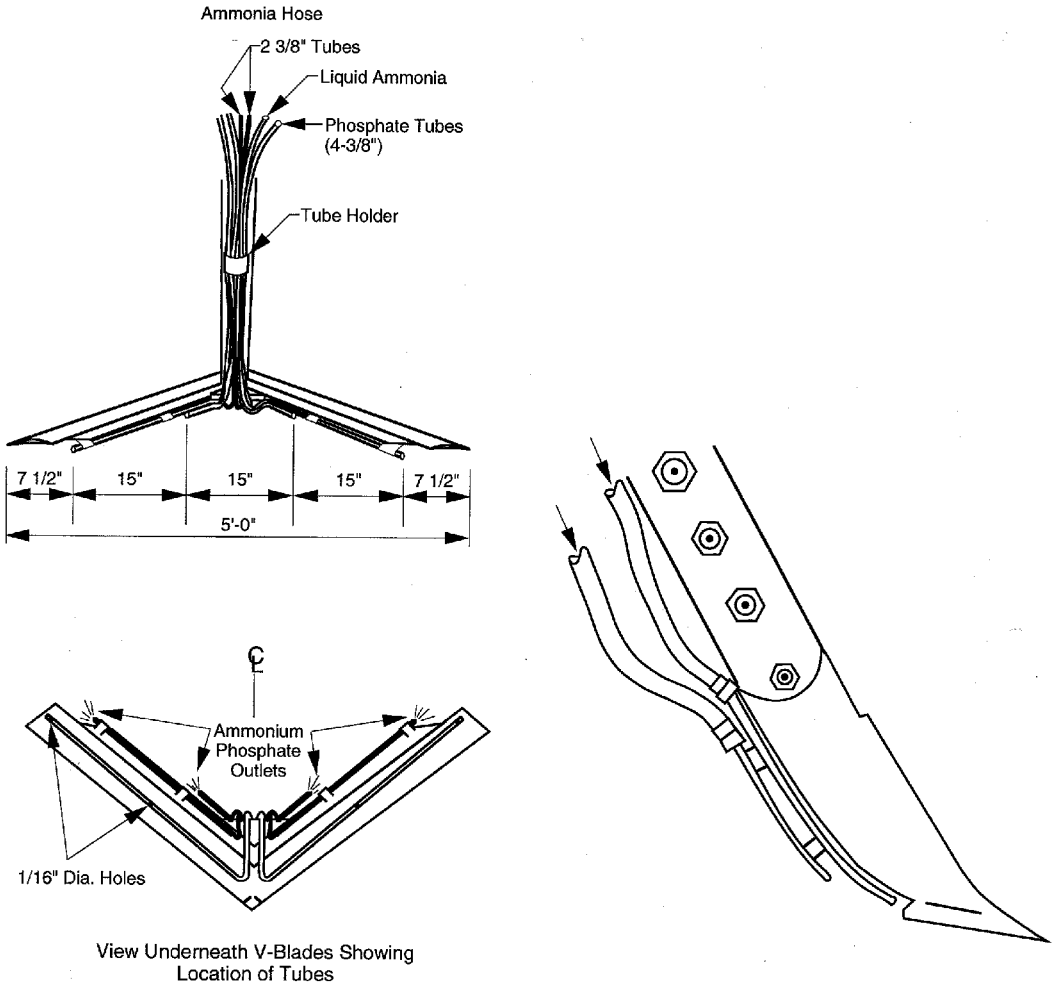

V-blade equipped with ammonia sparger and liquid phosphate injection assembly

Dual application knife with ammonia and phosphate tubes separated

Figure 2-3. (continued)

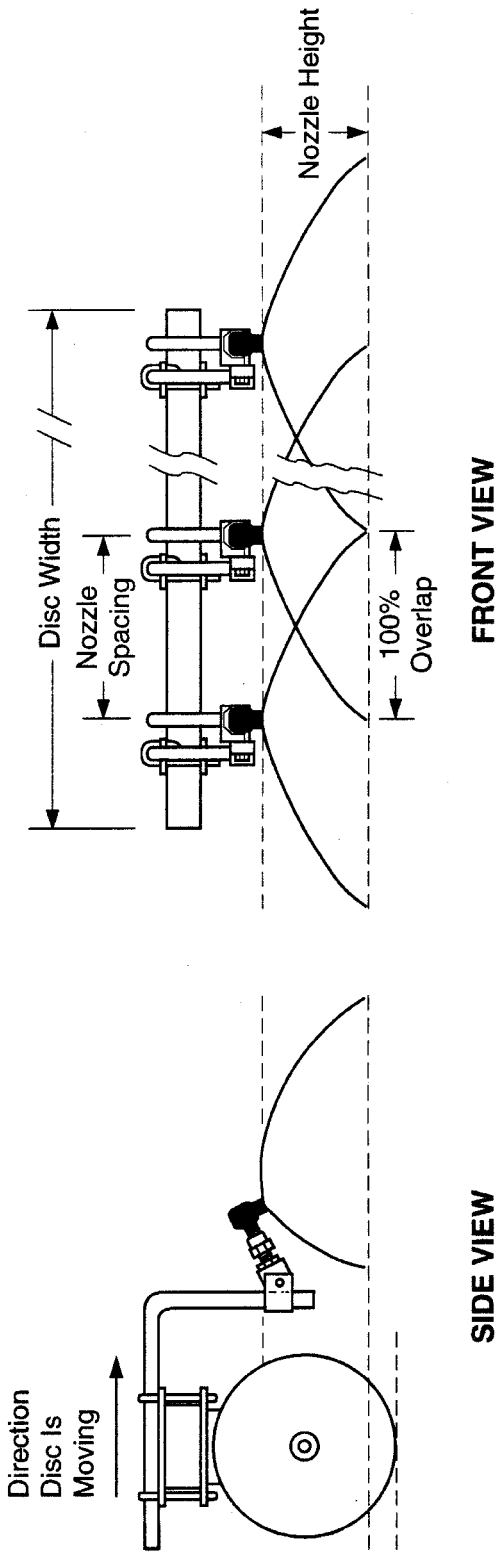

Figure 2-4. Side view and front view of a typical spray nozzle system used for broadcast application of fluid fertilizers.

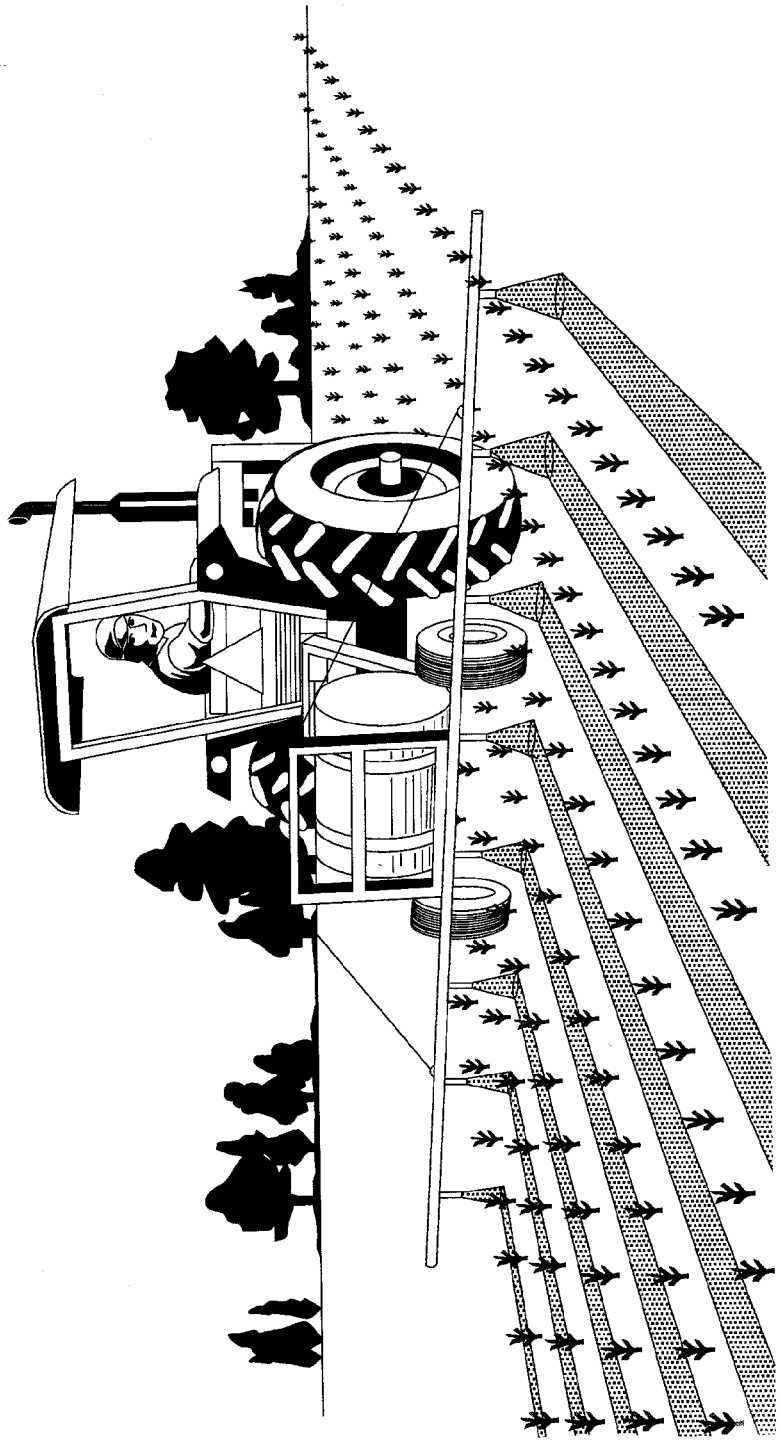

Figure 2-5. Typical "banding" application for fluid fertilizers.

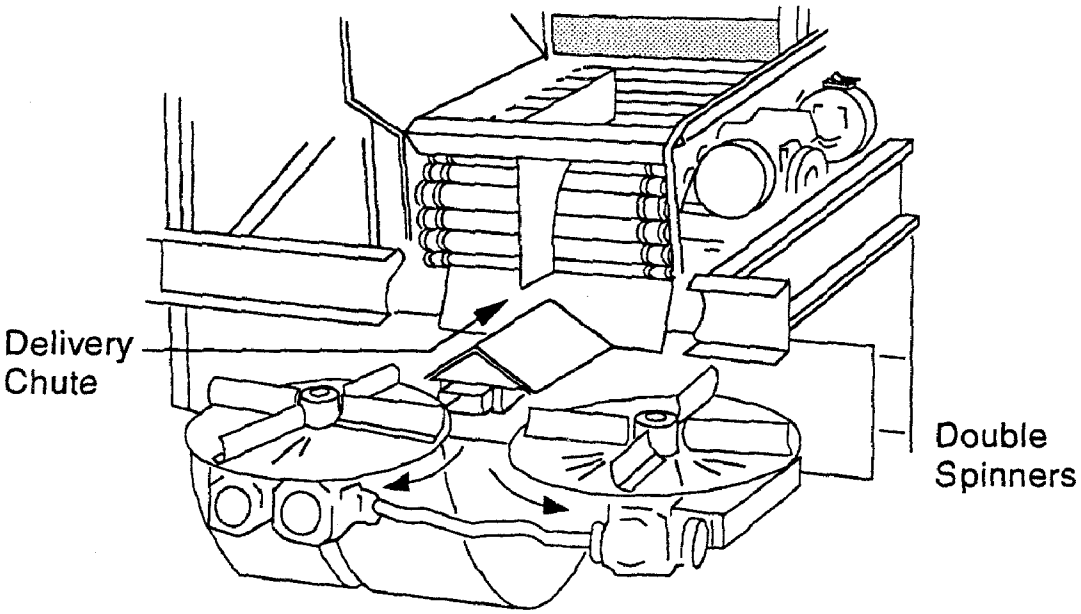

Figure 2-6. Centrifugal spreader for solid fertilizers.

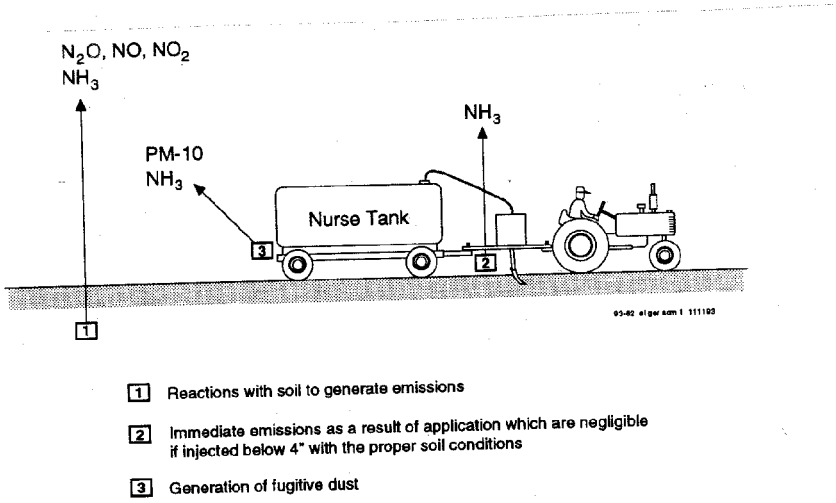

Figure 2-7a. Emission points for gaseous fertilizers.

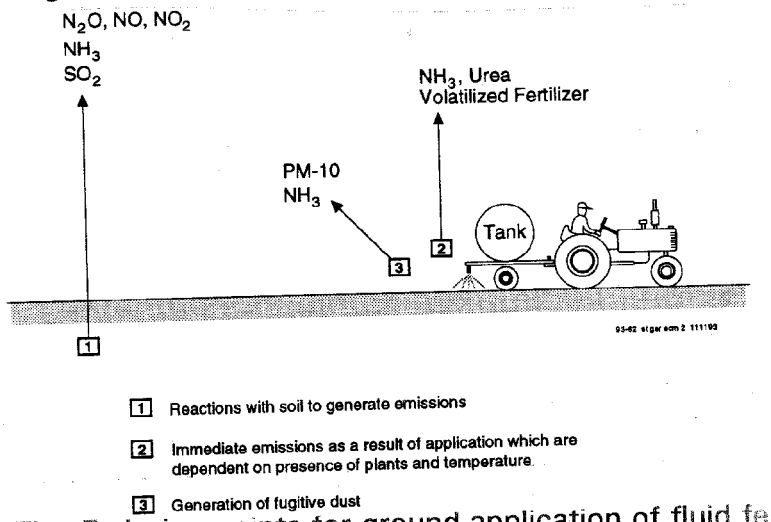

Figure 7b. Emission points for ground application of fluid fertilizers.

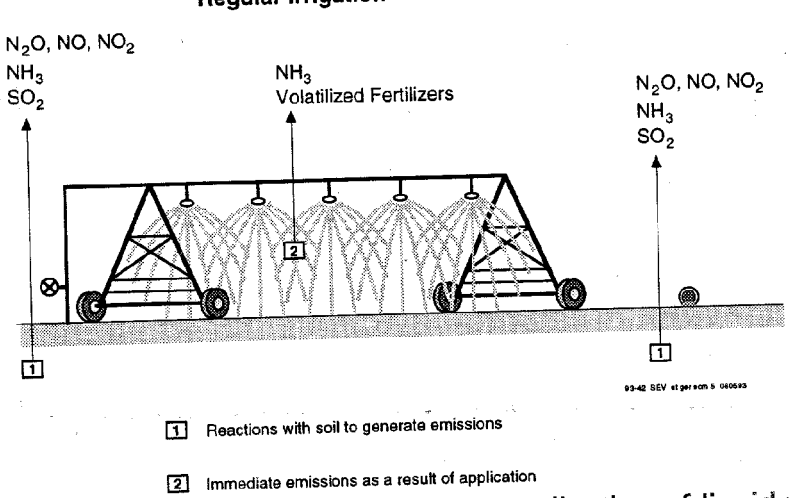

Figure 2-7c. Emission points for irrigation application of liquid fertilizers.

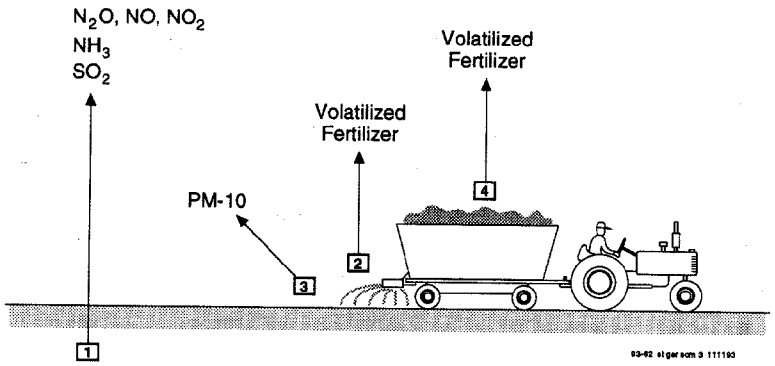

1 Reactions with soil to generate emissions

2 Immediate emission due to broadcasting the fertilizer. Believed to be negligible.

3 Generation of fugitive dust

4 Immediate emission due to volatilization of fertilizer. Believed to be negligible.

Figure 2-7d. Emission points for ground application of solid fertilizers.

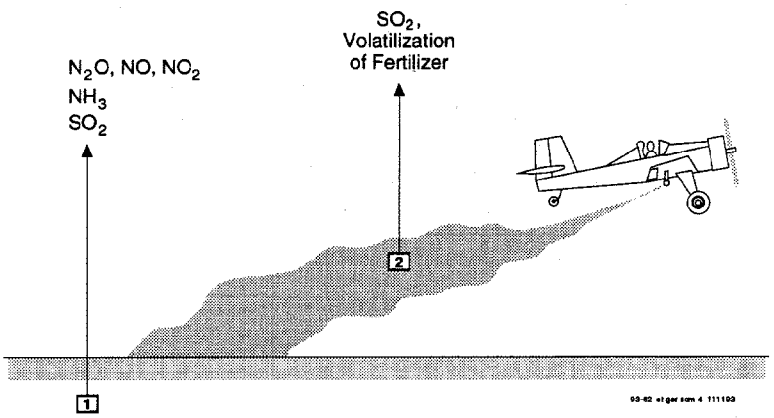

1 Reactions with soil to generate emissions

2 Volatilization of fertilizer. Immediate emissions believed to be much higher than ground application.

Figure 2-7e. Emission points for aerial application of fluid and solid fertilizers.

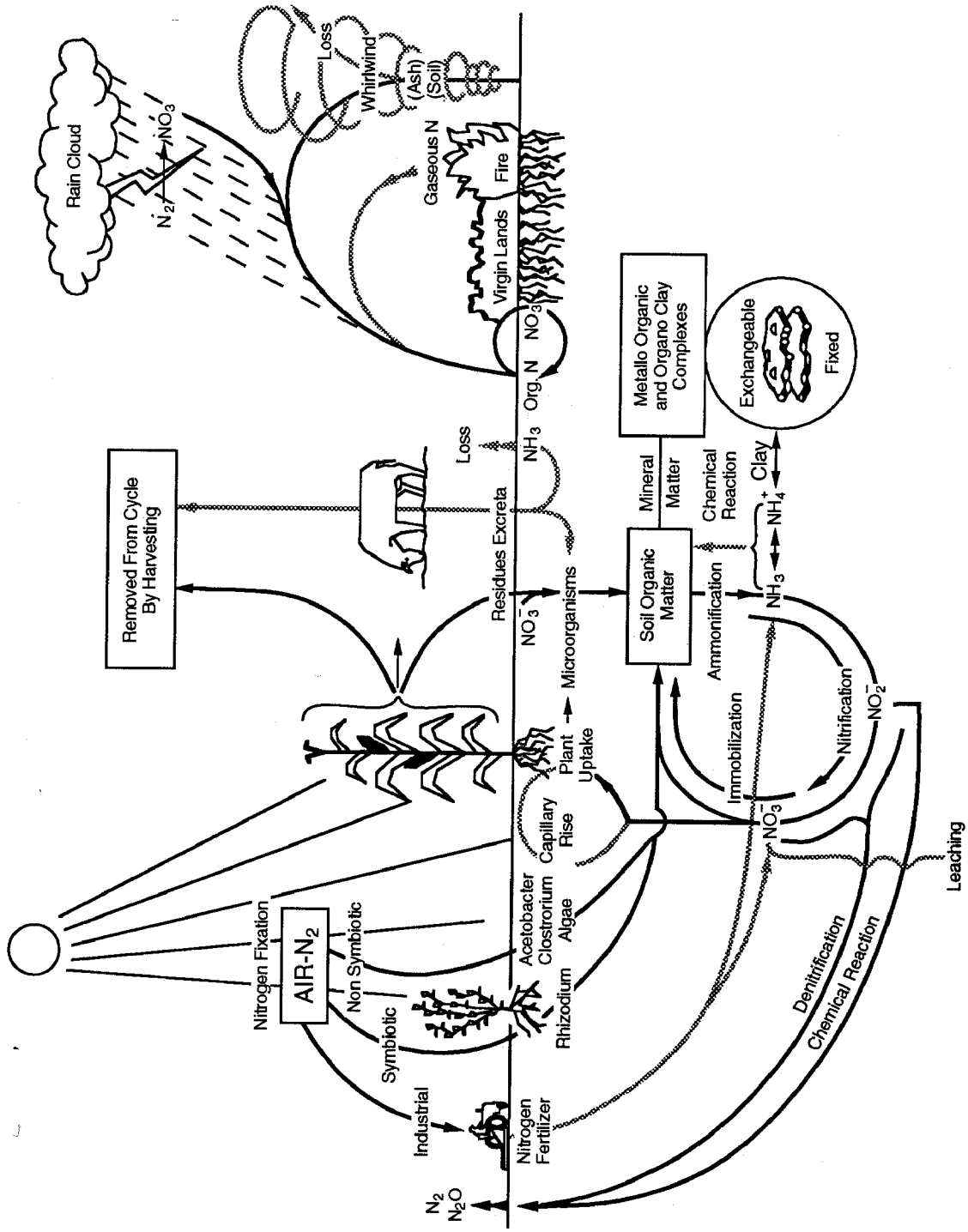

Figure 2-8. Nitrogen cycle.

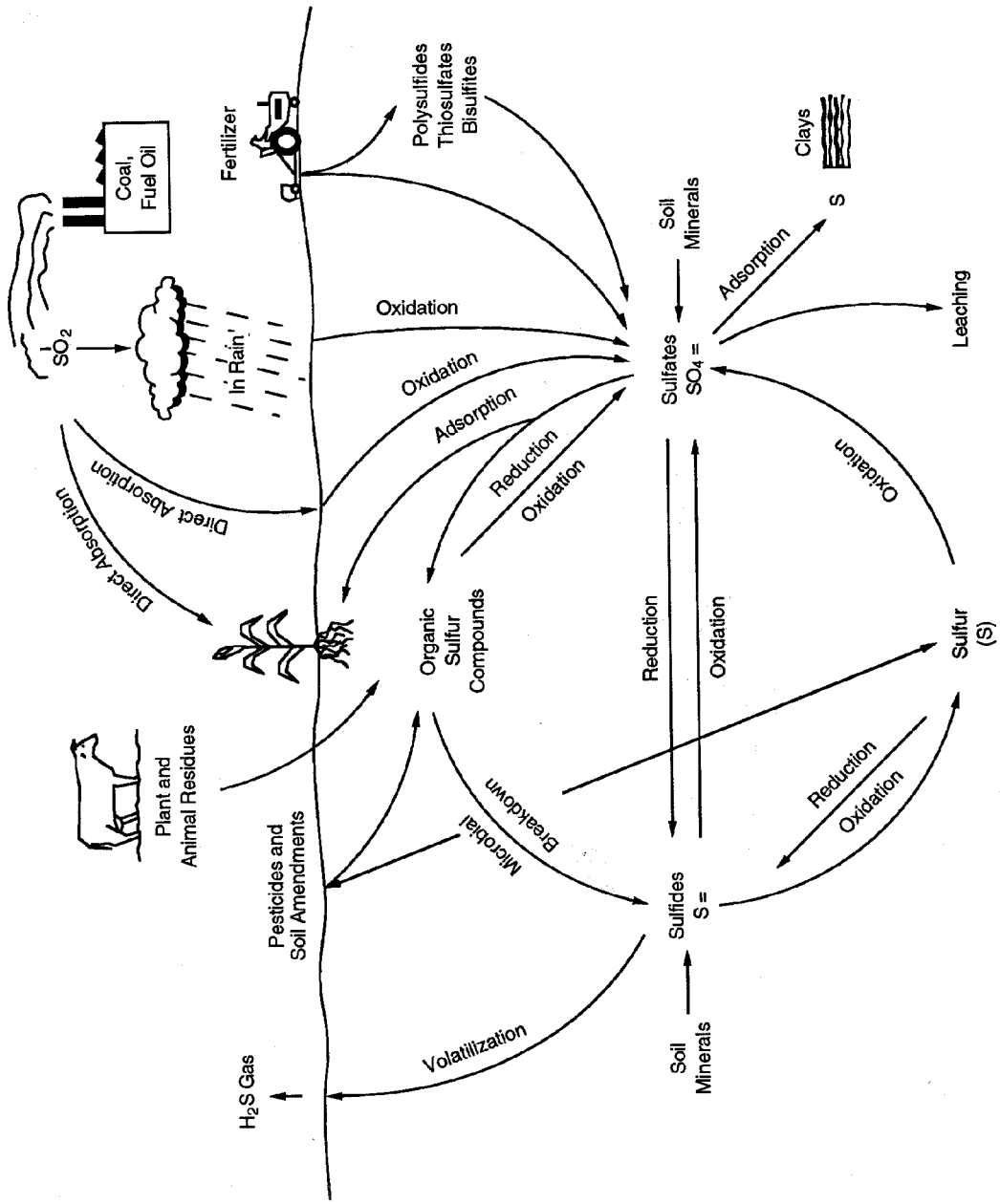

Figure 2-9. Sulfur cycle.

3. GENERAL DATA REVIEW AND ANALYSIS PROCEDURES

This section describes the literature search to collect emissions data and the EPA quality rating systems applied to data and to any emissions factors developed from those data.

3.1 LITERATURE SEARCH AND SCREENING[1-3]

A literature search was performed to collect pertinent emission data for operations associated with fertilizer application. This search included documents obtained from EPA's Office of Air Quality Planning and Standards (OAQPS), the AP-42 background files, the Crosswalk/Air Toxic Emission Factor Data Base Management System (XATEF), the VOC/PM Speciation Data Base Management System (SPECIATE), and the Air CHIEF CD-ROM. In addition, a comprehensive search of the Agricola Data Base (1/92-3/97) was performed.

Information on the application processes, including types of fertilizers, annual production, and usage was obtained from the *Fertilizer Use by Class*, *Today's Retail Fertilizer Industry*, and other sources. The Aerometric Information Retrieval System (AIRS) data base also was searched for data on the types of fertilizers and estimated annual emissions of criteria pollutants.

A number of sources of information were investigated specifically for emission test reports and data. A search of the Test Method Storage and Retrieval (TSAR) data base was conducted to identify any test reports for fertilizer application. The EPA library was searched for additional test reports. Publications lists from the Office of Research and Development (ORD) were searched for reports on emissions from fertilizer application. In addition, representative trade associations, including the International Fertilizer Development Center in Muscle Shoals, Alabama, and the National Fertilizer and Environmental Research Center in Muscle Shoals, Alabama, were contacted for assistance in obtaining information about the industry and emissions.

During the review of each document, the following criteria were used to determine the acceptability of reference documents for emission factor development:

1. The report must be a primary reference:

a. Source testing must be from a referenced study that does not reiterate information from previous studies.

b. The document must constitute the original source of test data.

2. The referenced study must contain test results based on more than one test run.

3. The report must contain sufficient data to evaluate the testing procedures and source operating conditions.

3.2 DATA QUALITY RATING SYSTEM[1]

Based on OAQPS guidelines, the following data are always excluded from consideration in developing AP-42 emission factors:

1. Test series averages reported in units that cannot be converted to the selected reporting units;
2. Test series representing incompatible test methods; and
3. Test series in which the production and control processes are not clearly identified and described.

If there is no reason to exclude a particular data set, data are assigned a quality rating based on an A to D scale specified by OAQPS as follows:

A—This rating requires that multiple tests be performed on the same source using sound methodology and reported in enough detail for adequate validation. Tests do not necessarily have to conform to the methodology specified by EPA reference test methods, although such methods are used as guides.

B—This rating is given to tests performed by a generally sound methodology but lacking enough detail for adequate validation.

C—This rating is given to tests that are based on an untested or new methodology or that lack a significant amount of background data.

D—This rating is given to tests that are based on a generally unacceptable method but may provide an order-of-magnitude value for the source.

The following are the OAQPS criteria used to evaluate source test reports for sound methodology and adequate detail:

1. Source operation. The manner in which the source was operated should be well documented in the report, and the source should be operating within typical parameters during the test.

2. Sampling procedures. The sampling procedures should conform to a generally accepted methodology. If actual procedures deviate from accepted methods, the deviations must be well documented. When this occurs, an evaluation should be made of how such alternative procedures could influence the test results.

3. Sampling and process data. Adequate sampling and process data should be documented in the report. Many variations can occur without warning during testing and sometimes without being noticed. Such variations can induce wide deviations in sampling results. If a large spread between test results cannot be explained by information contained in the test report, the data are suspect and are given a lower rating.

4. Analysis and calculations. The test reports should contain original raw data sheets. The nomenclature and equations used are compared to those specified by EPA (if any) to establish equivalency. The depth of review of the calculations is dictated by the reviewer's confidence in the ability and conscientiousness of the tester, which in turn is based on factors such as consistency of results and completeness of other areas of the test report.

3.3 EMISSION FACTOR QUALITY RATING SYSTEM[1]

The quality of the emission factors developed from analysis of the test data be rated using the following general criteria:

A—Excellent: Developed from A- and B-rated source test data taken from many randomly chosen facilities in the industry population. The source category is specific enough so that variability within the source category population may be minimized.

B—Above average: Developed only from A- or B-rated test data from a reasonable number of facilities. Although no specific bias is evident, it is not clear if the facilities tested represent a random sample of the industries. The source category is specific enough so that variability within the source category population may be minimized.

C—Average: Developed only from A-, B- and/or C-rated test data from a reasonable number of facilities. Although no specific bias is evident, it is not clear if the facilities tested represent a random sample of the industry. In addition, the source category is specific enough so that variability within the source category population may be minimized.

D—Below average: The emission factor was developed only from A-, B-, and/or C-rated test data from a small number of facilities, and there is reason to suspect that these facilities do not represent a random sample of the industry. There also may be evidence of variability within the source category population. Limitations on the use of the emission factor are noted in the emission factor table.

E—Poor: The emission factor was developed from C- and D-rated test data, and there is reason to suspect that the facilities tested do not represent a random sample of the industry. There also may be evidence of variability within the source category population. Limitations on the use of these factors are footnoted.

The use of these criteria is somewhat subjective and depends to an extent upon the individual reviewer. Details of the rating of each candidate emission factor are provided in Section 4.

3.4 EMISSION TESTING METHODS FOR FERTILIZER APPLICATION[4-16]

3.4.1 Sampling Methods[4-10]

Sampling methods used to determine atmospheric emissions from fertilizer application include the collection of soil grab samples and three types of air samples— air grab samples, "static" air samples, and "flux" air samples. The soil grab sample technique, which has not changed significantly over the years, involves using a scoop, auger, or bottle to collect a sample of soil for analysis. The three techniques used for the collection of air samples are discussed below.

3.4.1.1 Air Grab Sample Collection. Several techniques using bottles or flasks and several types of bags or balloons are used to obtain air grab samples. The containers are evacuated and then filled to a known volume based on the evacuation method. Reactive chemicals are placed in some containers for specific pollutants. The reactive chemicals preserve the pollutant for analysis at a later date or give qualitative information at the testing site.

3.4.1.2 Static Air Sample Collection. Downwind air samples collected at known heights above ground (see Figure 3-1) are called static air samples. As indicated by the arrows in Figure 3-1, the applicator moves in alternate directions up and down the field perpendicular to the wind direction. The pollutant concentration at different heights and the wind speed at those heights are determined from data collected at the sensor mast. Under the assumption that the flux from the field surface is equal to the horizontal flux normal to the vertical plane at the downwind edge of field, the total mean flux across a cross sectional vertical area of unit width is calculated as:

$$\overline{Q} = \int_{o}^{\perp} \overline{u}(z)\ \overline{c}(z)\ dz$$

where:

$\overline{Q}$ = the total time average flux across a unit width of the vertical plane at the field edge

$\overline{u}(z)$ = average wind speed at height z

$\overline{c}(z)$ = average pollutant concentration at height z

Z = height of the curve layer affected by the emissions

In practice, $\overline{Q}$, is obtained by numerical integration of the vertical profiles of wind speed and concentrations are obtained from the sensor mast. Note that under the assumptions listed above, $\overline{Q}$ is also equal to the total pollutant flux from a unit width of field surface.

Techniques for collecting static air samples have not changed over the years, except that the sorbents have been refined for lower detection limits and fewer interferences. The two types of static sample collection methods that are available—adsorption and absorption—are briefly discussed below.

For sample collection by adsorption, a desiccant tube, a sample tube containing a porous, solid sorbent specific to the pollutant being collected, and a calibrated vacuum pump are used. The pump pulls air through the sample tube at a known rate for the required length of time. This type of collection is very efficient until the adsorbent is near capacity. The available adsorbents are generally not pollutant-specific, however, and the presence of other compounds may interfere with the measurement of concentrations of specific pollutants.

For sample collection by absorption, a fritted tube, which is immersed into a reactive solution specific to the pollutant of interest, and a vacuum pump are used. Additional components may include impingers, packed columns, countercurrent scrubbers, and atomizing scrubbers. Again, the pump pulls the air sample through both the fritted tube and the liquid or hygroscopic solid for collection. The absorbent is then analyzed in the laboratory, usually within 1 week of collection.

3.4.1.3 Flux Air Sample Collection.[8,9] Air samples collected over a known area of soil or cropland for a specific period of time are called flux air samples. This type of sample is usually collected several times over a period of up to a year after initiation of the study. The results are then compared against both the background (i.e., unfertilized soil) and the peak emissions after application of the fertilizer. Flux air sample measurements allow scientists to determine the effects of both immediate and latent emissions from the application of fertilizers. The various flux air sampling systems are the most widely used of the three sampling procedures and are currently accepted as the techniques that provide the most reliable emission estimates.

A number of different flux chambers are used by investigators. All of these resemble the "isolation flux chamber" developed by Kienbusch et al. for determination of volatilized organic compounds at hazardous waste sites. Figure 3-2 is a diagram of the original sample collection apparatus used for flux sampling of fertilizer emissions as described by Hansen et al. Within the last 10 years, collection methods for flux air samples have improved greatly. These improved methods minimize the soil perturbations in the collection of samples, maximize the mixing of air within the containment, and achieve better calibration determinations.

The most common sample collection apparatus (Figure 3-3) includes a canopy (or "flux chamber") that is laid gently on the surface of the soil. The canopy includes a skirt around the perimeter, a removable lid with two ports, and a fan. The skirt is attached to the soil to prevent the canopy from being lifted due to sudden gusts of wind. The removable lid allows the soil to react with the environment with minimal disturbances when it is not being tested. Calibration of the canopy is performed using one port in the lid for the addition of a known gas while simultaneously collecting air samples. A small fan mixes the air within the

canopy so that uniform and reproducible samples may be collected. Additional features may include a collar around the canopy to allow for a better seal with the soil and a white styrofoam cover to prevent rapid heating of the test area.

Air samples can be collected from a flux chamber using either of two basic techniques: static (closed) air sampling or dynamic (open) air sampling. In static air sampling, a known volume of air is manually extracted from the headspace of the chamber using a syringe or evacuated container every 10 to 15 minutes over a 1-hour period. The samples extracted from the chamber are analyzed in the laboratory using various standard techniques (e.g., gas chromatography) to determine pollutant concentrations. Typically the sampling periods are short enough that these concentrations increase linearly with time. This linear increase, coupled with the volume of the flux chamber are used to estimate pollutant flux from the surface enclosed by the chamber. In dynamic flux sampling, a flow of filtered ambient air is continuously passed through the chamber for a specified period of time. The pollutants contained in the chamber are flushed from the headspace by the clean airflow, which is directed to one or more types of instruments for subsequent sampling and analysis of pollutant concentration. The concentrations and exhaust rates are used to calculate pollutant flux from the surface under the chamber. This technique is most applicable to the use of continuous analyzers that provide on-line data in the field.

3.4.2 Analytical Methods[4,6,7,9,15,16]

Analytical methods traditionally used for the determination of air emissions from fertilizer application have included those needed for measurement of soil properties, measurement of chemicals within the soil, the qualitative analysis of air pollutants, and the quantitative analysis of air pollutants. These methods may be performed in the field or in the laboratory, depending on acceptable holding times of the collected samples. This section summarizes the determinations and analytical methods pertinent to the collection of air samples for fertilizer-related pollutants for the four groups of measurements defined above.

3.4.2.1 Measurements of Soil Properties. Typical soil properties that are measured as part of the test protocol include the temperature, pH, texture, and moisture content. The temperature of the soil is measured using a calibrated thermometer, usually placed at a depth of 25 to 50 mm (1 to 2 in.) below the surface of the soil. The pH is measured using either pH paper or a pH meter. The texture is usually noted relative to the county soil surveys for the area or as previously characterized.

Two different measures of soil moisture content that may be used are percent of surface moisture content and maximum moisture volume. To measure percent of surface moisture content, a known weight of sample is dried overnight in an oven at 110°C (230°F). This technique removes all water, except that which is captured within the clay matrix. The noted difference in weight is directly related to the soil surface percent moisture within the soil sample. To measure maximum moisture volume, a known weight of sample is gravity-filtered to determine if the soil is already saturated. If so, the volume of water is measured and

recorded. Then, water is added to a known weight of sample until it is saturated to determine the saturation point.

3.4.2.2 Measurements of Chemicals Within the Soil.[12] Frequently, it is important to know the concentration of either a pollutant or related compounds in the soil during the collection of air samples. The analytical method generally used involves extraction of the soil sample with 2 molar potassium chloride (M KCl) (10 mg/g of soil). Analysis of the extract for NH_3, NO_2, and NO is performed by steam-distillation of ammonium, addition of ball-milled Devarda alloy for the reduction of nitrate and nitrite to ammonium, and the addition of sulfamic acid for the destruction of nitrite. The concentration of ammonium is determined by appropriate titration. This method allows the sample to be stored for long periods of time before analysis by first adding 2M KCl to the soil sample, filtering the supernatant, and storing the filtrate at 4°C (39.2°F).

3.4.2.2 Qualitative Analysis of Air Pollutants.[13] Occasionally, it is important to know the general magnitude of pollutant concentrations in the field. Colorimetric methods are used to qualitatively determine the concentration of a specific pollutant above a certain minimum. Typically, the colorimetric methods use a buffered dye to determine a change in pH or the presence of a basic gas such as NH_3. The field method used for qualitative determinations of NH_3 is briefly described.

The method uses a neutral indicator-gypsum suspension sprayed on the cross section of the NH_3 band of a soil column that is exposed by making a vertical cut across the band with a spade. The indicator-gypsum suspension is prepared by titrating 1 g of phenol red with 28 mL of 0.1 normal sodium hydroxide (N NaOH), diluting to 1 L with water, adding 300 g of finely divided calcium sulfate ($CaSO_4 \bullet 2H_2O$) powder, and adjusting the color of the indicator to orange.

3.4.2.3 Quantitative Analysis of Air Pollutants.[11,13,14] The quantitative analyses of pollutant compounds generally use accepted procedures or American Society for Testing and Materials (ASTM) methods. These analyses include routine calibration of the systems, verification of the standards, and calibration over a known concentration range for the pollutant. Table 3-1 summarizes the analytical methods used for each pollutant. Descriptions of the methods can be found in the references that are cited.

Other analytical methods also used are described in references 4 and 16.

REFERENCES FOR SECTION 3

1. *Procedures for Preparing Emission Factor Documents*, EPA-454/R-95-015, Office of Air Quality Planning and Standards, U. S. Environmental Protection Agency, Research Triangle Park, NC, May 1997.

2. H. L. Hargett et al., *Fertilizer Use by Class*, National Fertilizer Development Center, Muscle Shoals, AL, 1989.

3. H. L. Hargett and J. T. Berry, *Today's Retail Fertilizer Industry*, National Fertilizer Development Center, Muscle Shoals, AL, July 1988.

4. A. C. Stern, editor, *Air Pollution Standards*, Second Edition, Academy Press, New York, 1968, p. 601-718, 35-114.

5. D. Levaggi et al., "Quantitative Analysis of Nitric Oxide in Presence of Nitrogen Dioxide at Atmospheric Concentrations," *Environmental Science and Technology*, 8(4), 1974, p. 348-350.

6. J. C. Ryden et al., "Direct In-Field Measurement of Nitrous Oxide Flux from Soils," *Soil Science Society of America Journal*, 42:731-737, 1978.

7. W. I. Findlay and D. J. McKenney, "Direct Measurement of Nitrous Oxide Flux from Soil," *Canadian Journal of Soil Science*, 59:413-421, November 1979.

8. M. R. Kienbusch et al., "The Development of an Operations Protocol for Emission Isolation Flux Chamber Measurements on Soil Surfaces," Paper 86-20.1, 79th Annual Meeting of the Air Pollution Control Association, Minneapolis, MN, June 1986.

9. C. M. Hansen et al., "A Technique to Determine Volatilization Losses in the Application of Fertilizers Which Contain Free Ammonia," *Michigan Agricultural Experimental Station Quarterly Bulletin*, 39:495-99, 1957.

10. O. T. Denmead, J. R. Simpson, and J. R. Freney, "A Direct Measurement of Ammonia Emission After Injection of Anhydrous Ammonia," *Soil Science Society of America Journal*; 41:1000-1004, 1977.

11. J. W. Drummond et al., "New Technologies for Use in Acid Deposition Networks," ASTM STD 1052, pp. 133-149, 1990.

12. J. M. Bremner and D. R. Keeney, "Determination and Isotope-Ratio Analysis of Different Forms of Nitrogen in Soils: 3. Exchangeable Ammonium, Nitrate, and Nitrite by Extraction-Distillation Methods," *Soil Science Society of American Proceedings*, 30:577-582, 1966.

13. J. H. Baker et al., "Determination of Application Losses of Anhydrous Ammonia," *Agronomy Journal*, 51:361-362, 1959.

14. A. M. Blackmer and J. M. Bremner, "Gas Chromatographic Analysis of Soil Atmospheres," *Soil Science Society of American Proceedings*, 41:908-912, 1977.

15. L. B. Fenn and D. E. Kissel, "Ammonia volatilization from surface applications of ammonia compounds on calcareous soils. II. Effects of temperature and rate of ammonium nitrogen application," *Soil Science Society of American Proceedings*, 38:606-610, 1974.

16. D. H. Lenschow and B. B. Hicks (eds.), *Global Tropospheric Chemistry*, National Center for Atmospheric Research, Boulder, CO, May 1989.

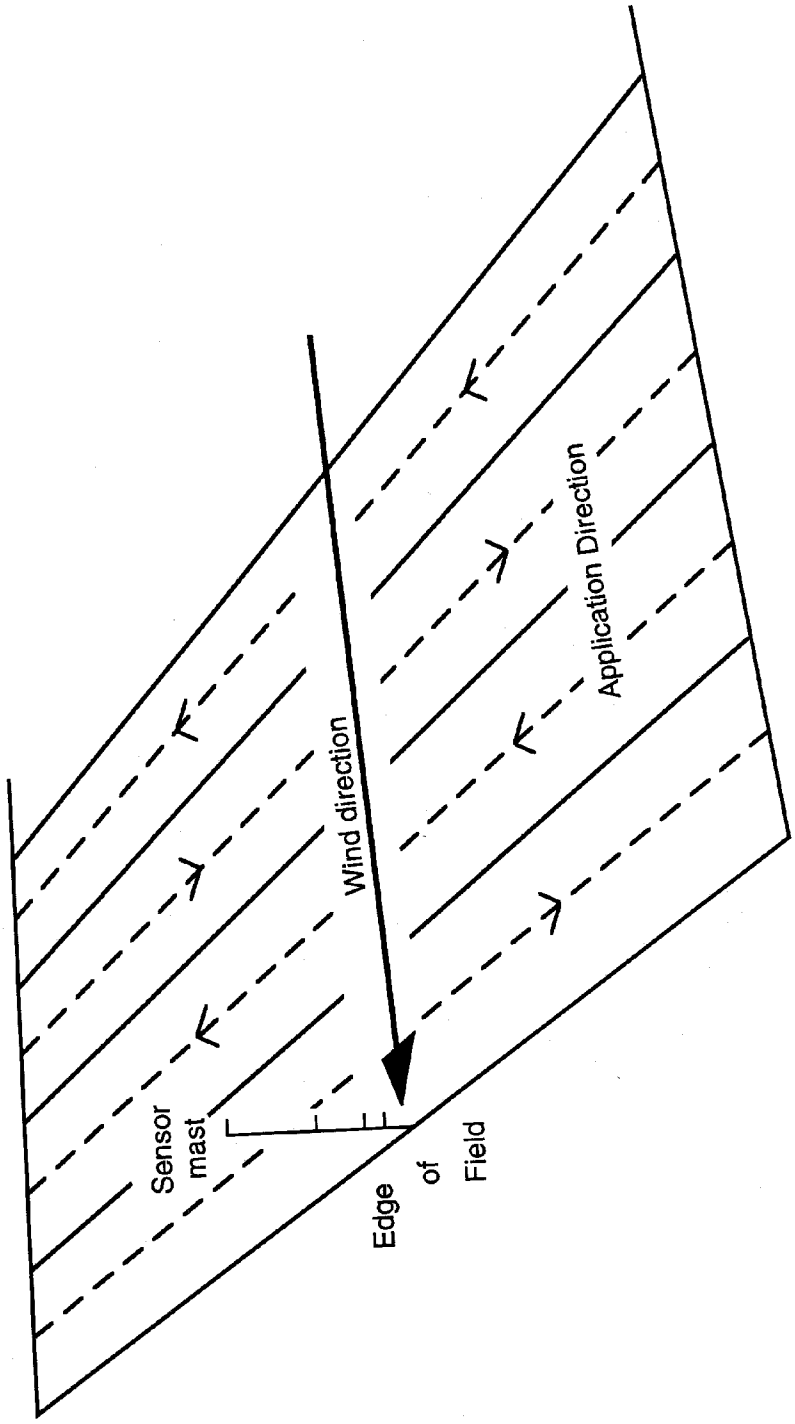

Figure 3-1. Diagram of static air sample collection.

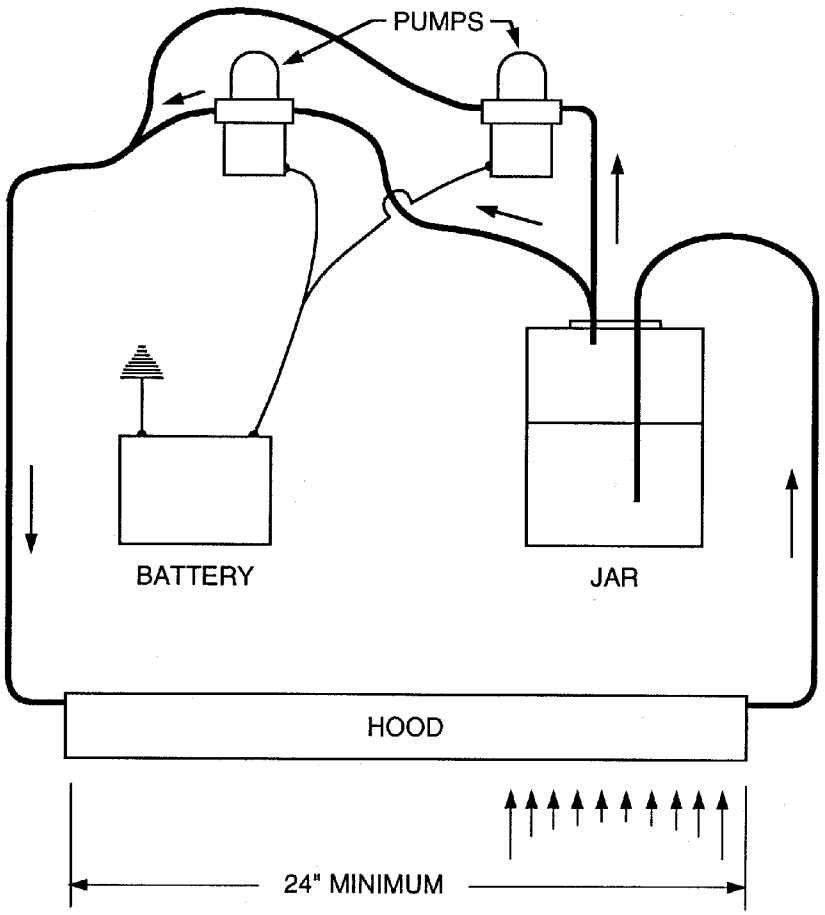

Figure 3-2. Diagram of the original flux chamber sample collection apparatus.

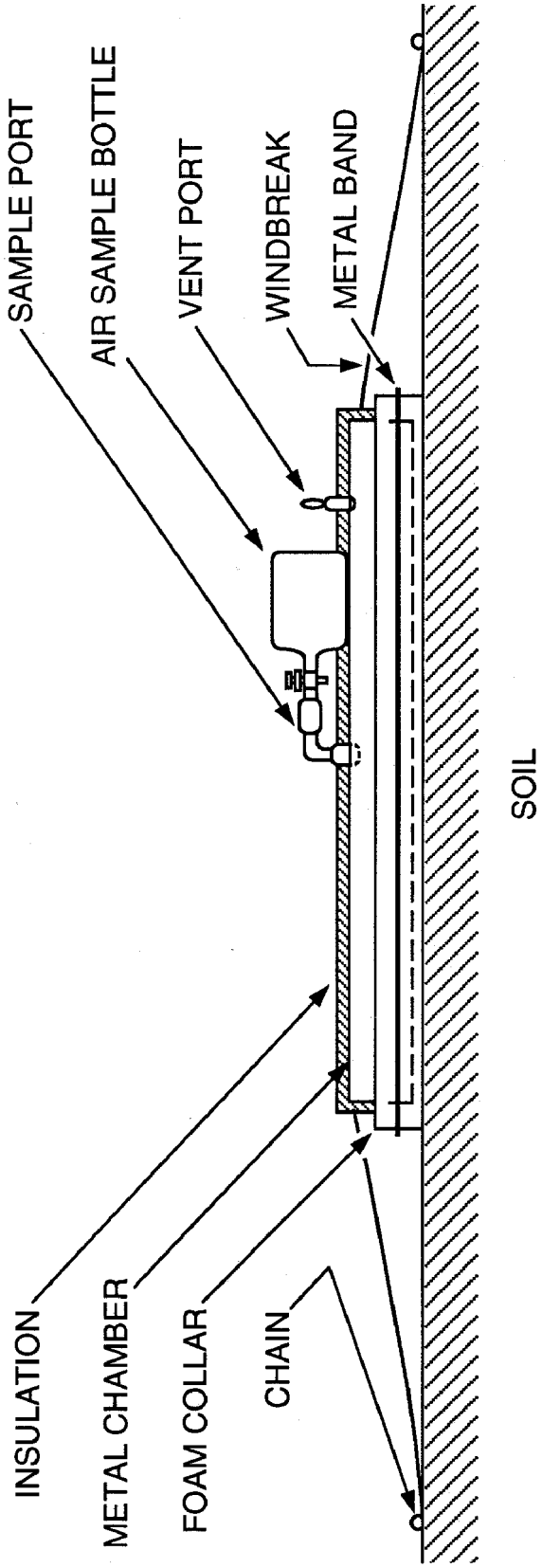

Figure 3-3. Typical canopy for sample collection (i.e., "flux chamber").[8]

TABLE 3-1. QUANTITATIVE ANALYTICAL METHODS FOR AIR EMISSIONS

Pollutant	Fertilizers	Methods	Reference No.
NH_3	Liquid NH_3	ASTM D1426	11
NH_3	Liquid NH_3	Absorption	12
NH_3	Liquid NH_3	Soil extract	11
N_2O	Nitrogen-containing	GC/Xenon	13
NO	Nitrogen-containing	Absorption	4
NO_2	Nitrogen-containing	Absorption	4
NO_2, NO	Nitrogen-containing	Luminax NO_2	10

4. AP-42 SECTION DEVELOPMENT

This section describes the test data and methodology used to develop air emission factors for the application of fertilizer. Fertilizer application is a new section in Chapter 9 of AP-42. Because it is new, several references were reviewed for background information on the processes by which fertilizer is applied and used to promote plant growth. The section narrative was prepared from this review and from comments provided by industry representatives.

4.1 REVIEW OF SPECIFIC DATA SETS

An initial literature search yielded 37 documents that were collected and reviewed during the background study for this AP-42 section. Of these, 14 contained data useful in the development of candidate emission factors for fertilizer application. These 14 documents are summarized in this background document. A subsequent literature search yielded 24 additional documents that were collected and reviewed. Three of these documents contain sufficient data for use in developing emission factors. These three documents are summarized in this background document. Those documents not summarized in this section are listed in Table 4-1 along with the reasons for their rejection.

No emission test reports were located in the literature search. All of the documents reviewed were technical papers published by academic investigators in refereed (peer reviewed) journals. Most of these articles relate to the estimation of nitrogenous greenhouse gases in the global environment and were not specifically intended for emission factor development. In addition, many articles summarized data generated from nontypical fertilizer compounds. The articles do not generally provide extensive detail on test protocols, raw data collected, procedures used to ensure data quality, and similar information necessary to assess the experimental data. For this reason, a B rating was the highest rating given to the data contained in any of the references described below.

4.1.1 Reference 1

Reference 1 is a technical paper published by Canadian investigators in 1991, which summarizes flux measurements of N_2O and NO_x on four barren fields located in Ontario. Limited analyses of the NO_x emissions indicated that they were primarily NO rather than NO_2. Each field was treated with 33 percent granular ammonium nitrate (NH_4NO_3) at application rates of a 100 kg per hectare (kg/ha) (89 lb per acre [lb/ac]), 200 kg/ha (178 lb/ac), and 300 kg/ha (267 lb/ac) by dry broadcasting. These same sites had been treated in a similar fashion for the past 19 years, except the amount of fertilizer applied varied over the years.

Sampling of N_2O and NO_x emissions was performed using a flux chamber five to eight times each day between the hours of 10 a.m. and 6 p.m. during the period from April to September. Concentrations of N_2O and NO_x in air samples from the chamber were determined by two separate methods. In the case of N_2O, headspace samples were extracted from the chamber using evacuated tubes, which were later analyzed by a

gas chromatograph equipped with an electron capture detector (GC/ECD) and Porapak Q column. Nitrogen oxide flux measurements were taken by passing filtered air through the chamber. The filtered air was analyzed on a continuous basis using a commercial chemiluminescent analyzer. Soil parameters monitored during the program included temperature, moisture, nitrate, and ammonium. The majority of the N_2O emissions occurred within about 60 days of application. Emission factors were developed for emissions of N_2O and NO from dry application of NH_4NO_3. Although the emitted NO is likely to be converted quickly to NO_2 in the atmosphere, the NO_x emissions were estimated as NO. Recent publications have stated that most, if not all, of the NO_x emissions from soils are in the form of NO, which is rapidly oxidized to NO_2 by the ozone in the soil or air above the soil; see Reference 39.

Reference 1 reported original experimental results. The measurements were conducted using a nonstandard but acceptable methodology, and adequate documentation was provided to assess data quality. Therefore, a rating of C was assigned to the test data contained in Reference 1. A copy of the paper is provided in Appendix A, along with applicable emission factor calculations.

4.1.2 Reference 2

Reference 2 is a technical paper that summarizes the results of flux measurements for two barren fields planted with maize. Manure, which was used as the basic nitrogen fertilizer, was fortified with either NH_4NO_3 or with a combination of NH_4NO_3 and urea. The fertilizer mix was dry broadcast at an application rate of 181 kg N/ha (161 lb N/ac) for the ammonium nitrate fortified manure and 237 kg N/ha (211 lb N/ac) for manure fortified with ammonium nitrate and urea. The material was immediately incorporated into the soil at the time of application.

Triplicate measurements of the N_2O emitted from the soil were conducted using a closed flux chamber over a period of 330 days. Headspace air samples were collected from the chamber using plastic syringes. The air samples were later analyzed using GC/ECD to determine the concentration of nitrous oxide. Soil grab samples were collected and analyzed for moisture, pH, and texture. Soil temperature and precipitation also were monitored as part of the study. Emission factors were developed for N_2O emissions from the dry application of a mixture of manure and NH_4NO_3 and from the application of a mixture of manure, NH_4NO_3, and urea.

As was the case with Reference 1 above, this paper reported only experimental data. The measurements were conducted using a generally accepted methodology that was adequately documented. The data contained in Reference 2 were, therefore, assigned a rating of C. A copy of Reference 2 is provided in Appendix B, along with applicable emission factor calculations performed using the data provided in the document.

4.1.3 Reference 3

Reference 3 is a technical paper of a study conducted at two sites in Sweden that were treated with calcium nitrate ($Ca(NO_3)_2$), a nontypical fertilizer. Fertilizer application rates of 120 kg N/ha (107 lb N/ac) (barley) and 200 kg N/ha (178 lb N/ac) (grass) were used at the two test sites. Two additional, unfertilized sites (barley and lucerne) were used as experimental controls. All four sites had soil of the same general type. The method used for application of the fertilizer was not specified.

Replicate air sampling was conducted using a flux chamber installed over the soil surface at each site over a period of 2 to 10 min. A commercial chemiluminescent analyzer was used to analyze the air sample extracted from the chamber for NO. Data on soil moisture, pH, texture, and temperature were collected during the study and reported in the paper.

Although the data were reasonably well presented, certain key information (e.g., method of fertilizer application) was missing. For this reason, a rating of D was assigned to the experimental data reported in Reference 3. A complete copy of the reference is provided in Appendix C, which also includes emission factor calculations performed using the experimental data. An emission factor was developed for NO emissions from the application (unspecified method) of $Ca(NO_3)_2$. However, because the application method was not specified, this emission factor was not incorporated into Section 9.2.1 of AP-42.

4.1.4 Reference 4

Reference 4 is a technical paper that reports the results of air and soil sampling at two forested locations (Sorentorp and Jardass) in Sweden. At each location, six individual test sites were selected: two fertilized, two watered only, and two untreated. For the fertilized sites, either fluid $Ca(NO_3)_2$ or fluid sodium nitrate ($NaNO_3$) was spray-applied to the moss-covered soil (grey-brown podsolic) at a rate of 46.4 kg N/ha (41.3 lb N/ac) and 11.2 kg N/ha (9.98 lb N/ac), respectively.

Duplicate measurements were made during each sampling period using a flux chamber. The concentration of NO was determined shortly after installation of the chamber using a continuous chemiluminescent analyzer. A total of 82 separate measurements (35 at Sorentorp and 47 at Jardass) were taken after application of the fertilizer on 12 different test plots over a period of 340 h. Soil parameters reported included pH, texture, and selected cation concentrations (by wet chemistry).

Since reference 4 is the original publication of the experimental data, it was considered in the development of candidate emission factors. The tests were performed using a generally accepted but nonstandard methodology. Documentation of the results was lacking and little information was provided about instrument calibration and maintenance. For these reasons, a rating of D was assigned to the test data. A copy of the reference is provided in Appendix D, along with appropriate emission factor calculations. Emission factors were developed for NO emissions from spray application of $Ca(NO_3)_2$ and $NaNO_3$.

4.1.5 Reference 5

Reference 5 is a technical paper that summarizes the results of emission testing at multiple test plots (sites) at two different locations (Mainz, Germany, and Seville, Spain). At the first location (Mainz), seven plots were tested for NO/NO_2: two unfertilized sites with barren soil, one barren site fertilized with ammonium chloride (NH_4Cl), one barren site fertilized with $NaNO_3$, one barren site fertilized with ammonium nitrate (NH_4NO_3), one unfertilized site covered with grass, and one grass-covered site fertilized with ammonium chloride (NH_4Cl). For the second test location (Seville), six different plots were evaluated for fluxes of NO/NO_2: one unfertilized site with barren soil, two barren sites fertilized with NH_4NO_3, one barren site fertilized with $NaNO_3$, one barren site fertilized with urea; and one barren site fertilized with NH_4Cl. At the Seville location, three additional plots were used to determine fluxes of N_2O: one unfertilized site with barren soil, one barren site fertilized with NH_4NO_3, and one barren site fertilized with urea. All fertilizers were applied as a fluid spray at a rate of 100 kg N/ha (89.1 lb N/ac).

Duplicate measurements were made using a flux chamber over a 15- to 18-day study period at each test site. A continuous chemiluminescent analyzer was used to determine the concentration of NO and NO_2. Semicontinuous N_2O measurements were also obtained using a gas chromatograph equipped with a gas sampling loop. At the Mainz location, sampling was conducted between 8 a.m. and 6 p.m., and 1 to 3 flux measurements were obtained each day at all seven plots. For the Seville location, NO and NO_2 flux rates were determined 5 to 8 times per day between 6 a.m. and 11 p.m. at each of the plots. Soil grab samples were collected and analyzed for pH, texture, and moisture content. Rainfall and soil temperature were also measured during the study. Emission factors were developed for NO, NO_2, and N_2O emissions from spray application of NH_4NO_3, urea, NH_4Cl, and $NaNO_3$.

Reference 5 reported original data and thus was suitable to use for emission factor development. The tests were conducted using an accepted methodology and instrumental detection limits and accuracy determinations were specified in the text. However, certain key information was lacking with respect to the measurement method used for N_2O as well as details on the fertilizer application. Also, information was lacking on actual emission calculation procedures. For these reasons, a rating of D was assigned to the data contained in Reference 5. A copy of the paper is reproduced in Appendix E, which also contains calculations performed using the experimental data.

4.1.6 Reference 6

Reference 6 is a technical paper that is a companion study to reference 5. In reference 6, five different plots were tested for fluxes of N_2O at one location near Seville, Spain. Two plots were covered with Bermuda grass; the other three plots were located on cultivated land, which remained unplanted until the beginning of the study. One plot of each type remained unfertilized and was the experimental control. The remaining Bermuda grass plot received a 55 percent liquid solution of NH_4NO_3, which was spray-applied.

The two fertilized plots on the cultivated land were treated with either urea or NH_4NO_3, which was applied as a liquid solution. The application rate of all fertilizers was 100 kg N/ha (89.1 lb N/ac).

A flux chamber was used to determine N_2O emission rates over a 31-day period. The flux chamber was installed over the soil surface, and the pollutant concentration was determined by the same semiautomatic sampling and analysis technique described above for reference 5. Using this method, eight individual data points were generated each day per plot for the grass-covered plots. For the three cultivated plots, six individual measurements were made each day on each plot. Emission factors were developed for N_2O emissions from spray application of urea and NH_4NO_3.

Reference 6, like Reference 5, is the first publication of original data collected during the study. The tests were conducted using an accepted method, but documentation for both analysis method and results was somewhat limited. For this reason, a rating of D was assigned to the test results reported in Reference 6. A copy of the paper, as well as applicable hand calculations, is included in Appendix F.

4.1.7 <u>References 7 and 8</u>

References 7 and 8 are original publications of a study conducted at a single site located in Narrabri, New South Wales. In this study, 130 kg N/ha (116 lb N/ac) of anhydrous NH_3 was injected into a bare, moist clay soil at a depth of 12 cm. The fertilizer was applied 12 bands at a time and was spaced 0.5 m (20 in.) apart.

"Static" air samples (Figure 3-1) were collected downwind of the site at sampling heights of 0.31, 0.74, 1.24, and 2.24 m (1.02, 2.43, 4.07, and 7.35 ft). Bubblers containing 5 mL of 2 percent phosphoric acid were used to collected the samples, which were later analyzed for NH_3 content. Samples were initially collected during every applicator pass, but later samples were collected every two or four passes. The average sampling time per pass was 17 min. In addition, soil samples were collected and analyzed for total nitrogen (Kjeldahl), bulk density, and moisture content. Wind speed and air temperature were determined at each measurement height. An emission factor was developed for fugitive NH_3 emissions from anhydrous NH_3 application.

References 7 and 8 are the first publication of original data, and the tests were performed using a reasonable test protocol. Appropriate QA procedures appear to have been applied and results were well documented. For these reasons, a rating of B was assigned to the test data. Copies of both papers are provided in Appendix G, along with applicable emission factor calculations.

4.1.8 <u>Reference 9</u>

Reference 9 is a technical paper that summarizes the results of a study conducted at the Iowa State University Agronomy Research Center near Ames, Iowa. Ammonium sulfate [$(NH_4)_2SO_4$], urea, and $Ca(NO_3)_2$ were applied to 72 different plots of cultivated land at application rates of 125 kg N/ha

(111 lb N/ac) or 250 kg N/ha (223 lb N/ac). The emissions of N_2O from these plots were compared to 12 unfertilized plots at the same location. The fertilizers were spray-applied to rototilled barren soil in seven duplicate treatments and were then immediately tilled into the soil.

Nitrous oxide emission rates were determined over a period of 96 days using a closed flux chamber installed over the soil surface. Multiple grab samples were extracted from the chamber headspace over 10-min measurement periods. The samples were later analyzed by gas chromatography using xenon as an internal standard. Soil parameters determined during the study included temperature (at 7.5 cm [2.95 in.]), moisture content, field capacity, and exchangeable ammonium and nitrate content. Emission factors were developed for N_2O emissions from spray application of $Ca(NO_3)_2$, urea, and $(NH_4)_2\ SO_4$.

Reference 9 is the first publication of the original data from the experimental program. The tests were performed using a generally accepted method and reasonable documentation was provided on the sampling and analysis conducted in the study. For these reasons, a rating of B was given to the data provided in Reference 9. A copy of the publication is provided in Appendix H, along with applicable emission factor equations.

4.1.9 Reference 10

Reference 10 is a technical paper summarizing the results of a 2-year study conducted at two sites (Harrow and Woodslee) in Ontario, Canada. At the Harrow site, NH_4NO_3 was applied once a year during the study period to multiple test plots by dry broadcasting at application rates of 0, 112, 224, and 336 kg N/ha (100, 200, and 300 lb N/ac). At the Woodslee location, five different plots were sampled during the first year of the study. Four plots were treated with either potassium nitrate (KNO_3) or urea at application rates of 168 kg N/ha (150 lb N/ac) or 336 kg N/ha (300 lb N/ac), and the fifth plot was left unfertilized. During the second year at Woodslee, plots of the same soil type were treated with NH_4NO_3 at application rates of 112, 224, and 336 kg N/ha (100, 200, and 300 lb N/ac), respectively. One unfertilized plot also was used as the experimental control during the second year of testing. All sampling sites were planted with corn during the study.

Triplicate sampling was conducted over a period of up to 1 year using a flux chamber. The chambers were installed between the rows of corn with the edges of the chamber inserted 5 to 10 cm (1.97 to 3.94 in.) into the soil. Three samples were collected from the chamber headspace every 30 min using evacuated Pyrex tubes. The tube samples were analyzed for N_2O using GC/ECD with a Porapak Q column. Soil moisture content also was determined in the study. Emission factors were developed for N_2O emissions from dry application of urea, NH_4NO_3, and KNO_3.

Reference 10 is the first publication of original experimental data. The tests were conducted using a generally accepted method, and better than average documentation was provided on calibration of the analytical instrument. The lack of continuity in fertilizer type and application at the Woodslee location between the 2 years of the study made data comparison difficult. For these reasons, a rating of C was

assigned to the data contained in Reference 10. A copy of Reference 10, along with applicable emission factor calculations, is provided in Appendix I.

4.1.10 Reference 11

Reference 11 is a technical paper that summarizes a study conducted at a site in Canada. Urea was applied to a Kentucky bluegrass/red fescue sod mowed to a height of 7.5 cm (2.95 in.). The fertilizer was dry-broadcast at a rate of 100 kg N/ha (89.1 lb N/ac) in a circular area of 0.405 ha (1.0 ac) for test purposes.

Static air sampling was conducted in the center of the test plot using a single mast on which "gas collector flasks" and anemometers were mounted at heights of 10, 50, 100, and 150 cm (3.94, 19.7, 39.4, and 59.1 in.). Two-hour samples were collected by continuously passing air through 500-mL glass tubes containing glass beads and a 3 percent solution of H_3PO_4. The concentration of NH_4^+ in the absorbing solution was measured colorimetrically using a Technicon Autoanalyzer procedure. Using an atmospheric dispersion calculation, the total mass flux of NH_3 from the site was determined from the measurements. An emission factor was developed for NH_3 emissions from dry application of urea.

Because Reference 11 is the first publication of original experimental data, it was considered in the analysis. The tests, however, were conducted using a generally unproven test method, and the information in the reference was poorly documented with few details provided on test conditions, analytical results, and so forth. Therefore, a rating of D was assigned to the data contained in Reference 11. A copy of the document, along with appropriate emission factor calculations, has been provided in Appendix J.

4.1.11 Reference 12

Reference 12 is a technical paper that presents the results of a sampling program conducted at a site located in New York State. Anhydrous NH_3 was applied to a depth of 10 to 20 cm (4 to 8 in.) in loam soil at rates of 95.4 to 293 kg N/ha (85 to 261 lb N/acre). Ammonia loss was determined both behind the applicator knife as well as outside of the knife path.

To determine the loss of NH_3, a simple flux chamber system, consisting of an inverted pan inserted into the soil, was used. Air was passed through the chamber in a dynamic manner and was directed to an acid absorption tower containing dilute sulfuric acid. Up to 20 different chambers were operated simultaneously for a period of about 6 h for sample collection. The amount of NH_3 collected by the acid in the absorption tower was determined by titrating with standardized NaOH. In addition, one pan was placed immediately above the applicator blade, and air was pulled through an absorption tower at the rate of 3 ℓ/min. This system provided an estimate of the fugitive emissions during application, while the other pans provided a measure of immediate emissions.

Reference 12 is the first publication of the experimental results obtained in the study. The test method used was somewhat crude, but it was reflective of measurement technology available when the sampling was

conducted. Therefore, a rating of D was assigned to the data contained in Reference 12. A copy of the paper, accompanied by applicable hand calculations, is provided in Appendix K.

4.1.12 Reference 13

Reference 13 is a technical paper that studies the influence of plant residues (chopped wheat straw) on denitrification rates in conventional tilled (CT) and zero tilled (ZT) soils using hard red spring wheat as the test crop. Flux measurements and cumulative gaseous N_2O-N losses from the study plot in Saskatchewan were measured using the acetylene inhibition technique. Four plots were prepared for each of the two tilled soils: one was a control, one had straw treatment only, one had fertilizer only, and one had fertilizer plus straw. For plots receiving fertilizer, an aqueous solution of ammonium sulfate [$(NH_4)_2SO_4$] at a level of 100 kg of N per hectare (kgN/ha) was applied using a back-pack sprayer.

Samples were obtained from each test plot during the test period (June 5 to September 4, 1981) by removing three pairs of undisturbed soil cores from each treatment every week. The major N_2O emissions for fertilized ZT and CT plots occurred during June following a heavy mid-June rainfall. Emissions of N_2O were much higher for the ZT plots than the CT plots during this period.

Reference 13 is the first publication of the original data. Tests were performed using a relatively new method for measurement; reference was provided to an earlier publication for the method but analytical procedure and calibration data were lacking for the current study. For these reasons, a rating of D was assigned to the test data. A copy of the reference is provided in Appendix L along with appropriate emission factor calculations. Emission factors were developed for N_2O emissions from spray application of $(NH_4)_2SO_4$.

4.1.13 Reference 14

This reference is a technical paper that reports the results of a study on the influence of soil compaction and fertilization on methane uptake and N_2O emissions from an easily compacted soil in the humid climate of western Norway. The experiment was a split-plot design with two replicates, soil compaction on main plots and fertilization on small subplots. Flux measurements were obtained using soil cover chambers placed at random within each field plot. Fertilizer treatments were: NPK fertilizer (18-3-15) at an application rate of 140 kg NH_4NO_3-N/ha and two cattle slurries (CS) equivalent to 189 kg N/ha and 81 kg N/ha. Dry fertilizer was spread by hand and the CS fertilizers were diluted with water and spread by can with a spreading plate. Soil compaction was done with a double rear-wheel tractor. The crops were green fodder with rape, barley, peas, vetch, and rye grass.

Gas fluxes at the soil surface were measured by removing gas samples through rubber stoppers in the top of the soil cover chambers and storing the samples in evacuated glass vials. Fluxes were estimated by the increase in concentration during the first 3 hours after placement. Within 14 days of sampling, the samples were analyzed by gas chromatography using one of three detectors, depending on N_2O concentration or

presence of CH_4 or CO_2. The areas under the flux curves were used to estimate the accumulated N_2O emissions and methane uptake during the experiment. Reference 14 is the first publication of the original data. The tests were performed using a generally accepted analysis method and reasonable documentation was provided for the sampling method. A rating of C was assigned to the test data. A copy of the reference is provided in Appendix M along with emission factor calculations.

4.1.14 Reference 39

Reference 39 is a technical paper that presents measurements of NO and N_2O emissions from fertilized Bermuda grass plots located in a subtropical region of southern Texas. The measurements were taken during the 1989 growing season (May 24 through July 26). Ammonium sulfate $(NH_4)_2SO_4$ was applied at a rate of 52 kg N/ha (46 lb/ac) in an intensive cultural management scheme. The management scheme consisted of harvest and fertilization cycles repeated every 9 weeks. The application method was not specifically discussed, but the text indicates that the fertilizer was a solid and was probably broadcast. Selected soil and climatic data was recorded and presented in the paper.

The experiment to determine N_2O emissions utilized a vented, cylindrical soil cover mounted on top of a ring driven 5 cm into the soil. Each cover was constructed of polyvinyl chloride pipe, insulated with polyurethane foam and covered with a reflective aluminized polyester film to reduce heating of the soil. The experiment to determine NO emission used a similar cover equipped with an air circulator. Air was collected using polypropylene syringes equipped with nylon stopcocks. Collected samples were analyzed within 12 hours using a gas chromatograph equipped with an electron capture detector. The experimental method was designed to maximize consistency and allowed slightly enhanced NO emissions due to the clipping and removal of grass.

Reference 39 reported the results of original experimental data. The measurements were conducted using acceptable methods and adequate documentation was provided to evaluate data quality. The data are assigned a C rating. A copy of Reference 39 is provided in Appendix N, with applicable emission factor calculations performed using the data provided in Table 2 of the article.

4.1.15 Reference 41

Reference 41 is a technical paper that presents NO and N_2O emissions from a fertilized no-till corn site at the West Agricultural Experiment Station in Jackson, Tennessee. The data were collected between April 27 and November 30, 1993 (210 d). Corn was planted on April 21 in 76 cm rows on four replicated plots. The application method was not discussed. However, based on comparisons within the article to other articles that document emissions from dry broadcast application, the application method for this study is assumed to be dry broadcast application. Soil data were recorded and presented in the article.

A static-chamber technique was utilized to collect emissions data. The chambers were constructed of an aluminum frame driven 20 cm into the ground. The frame was enclosed with an aluminum cover equipped

with sampling ports. Air samples were withdrawn at 3-minute intervals using a gas correlation instrument. Gross emission rates were obtained using measured data in conjunction with mass balances. The experimental method included process steps to ensure the reliability of data.

Reference 41 reported original experimental results. The experimental and analytical methods were acceptable. Adequate documentation was provided to evaluate the data quality. However, the application method was not discussed. The data were assigned a C rating. A copy of Reference 41 is provided in Appendix O, with an applicable emission factor calculations performed using the data provided in Table 2 of the article.

4.1.16 Reference 43

Reference 43 is a technical paper that summarizes the results of N_2O emissions from different cropping systems and aerated, nitrifying, and denitrifying tanks of a municipal waste water treatment plant. Data pertaining to the tanks at the municipal waste water treatment plant were not considered. The experiments were implemented at the Experimental Station of the Institute for Agronomy and Plant Breeding, Justus Liebig University, Germany. Average soil and climatic data were recorded and presented in the paper.

The experimental site consisted of 8 x 10 m plots. The sites were established in 1982 and ammonium nitrate (assumed dry broadcast application) was applied at rates of 80 kg N/ha (71 lb/ac) and 120 kg N/ha (107 lb/ac) on independent experimental plots. The N_2O emission fluxes were determined as described by Scwartz et al. (1994), but without flushing the soil sample with C_2H_2. Open chambers with a steel base and a removable lid were placed 5 cm into the soil between the rows. Samples were collected in three molecular sieve traps during 4h/d periods with the chamber lids installed. The chamber lids were removed at other times to prevent microclimate changes within the testing environment.

Reference 43 reported original experimental data. The measurements were conducted using acceptable methods and adequate documentation was provided to evaluate data quality. As a result, the data are assigned a C rating. A copy of Reference 43 is provided in Appendix P, with applicable emission factor calculations performed using the data provided in the text on page 257 of the article.

4.2 DEVELOPMENT OF CANDIDATE EMISSION FACTORS

As discussed in Section 2.3, emissions of gaseous air pollutants associated with the application of nitrogen fertilizers may be "immediate," generated during or shortly after application, and/or "latent," occurring days or weeks after application. Candidate emission factors for both emission types were developed as discussed below.

4.2.1 Analysis of Experimental Data

No comprehensive emission test reports were found in the literature search. Technical papers published in refereed journals were used for emission factor development. All the data in these technical papers were generated for the purpose of determining global budgets of nitrogenous greenhouse gases and not for emission factor purposes. Inconsistent and nonstandardized sampling and analytical methods were used, and testing was conducted over vastly different time periods, from a few hours or days to months or even years. For this reason, analysis of the data was difficult and resulted in generally low ratings being assigned to the emission factors.

To derive the candidate emission factors for fertilizer application, individual emission factors were hand calculated for each test series from the experimental data (see Appendices A to M). All emission factors were normalized on the basis of equivalent nitrogen applied, regardless of fertilizer type. The emission factors obtained from each reference were tabulated according to type of emission (i.e., immediate or latent) and type of pollutant, and the arithmetic mean and standard deviation were calculated for the data in each pollutant category.

The arithmetic mean of the individual emission factors in each pollutant category was calculated, as appropriate, by summing the emission factors derived from each test data set and dividing the sum by the total number of factors.

The standard deviation of the average emission factors was calculated using the general expression:

$$s = \left[\frac{\sum x_i^2 - \frac{\left(\sum x_i\right)^2}{n}}{n-1} \right]^{1/2} \qquad (4\text{-}1)$$

where: s = standard deviation
n = number of individual emission factors
x_i = emission factors derived from each test data set

The candidate emission factors developed by the above method are provided in Tables 4-2 and 4-3 for immediate and latent pollutant emissions, respectively. Except in the case of latent N_2O, the candidate emission factors shown in these tables were obtained by averaging all data sets in each pollutant category.

In Reference 5, emission data were presented for soil emissions of NO and NO_2. Recent scientific papers discussing the biological mechanisms for NO_x emissions from the soil have cited evidence to show that essentially all (over 90 percent) NO_x emissions are in the form of NO and little, if any, are in the form of NO_2. There is no evidence to conclude that appreciable quantities of NO_2 are emitted directly from the soil. The formation of NO_2 occurs through the rapid oxidation of the NO by ozone present in the soil or the air

above the soil (Reference 39). The authors in Reference 5 state that their measurements clearly indicate the establishment of NO and NO_2 equilibrium mixing ratios. The NO_2 data reported in Reference 5 are included in Table 4-3. However, because of the differing viewpoints concerning soil emissions of NO_2, these data are not used to develop candidate emission factors later in this section and were not included in the AP-42 section.

As shown in Tables 4-2 and 4-3, the data used to derive the candidate emission factors are highly variable and typically range over several orders of magnitude. Also, the data are usually of limited quantity and of poor quality, which is reflected in the E rating assigned to the candidate emission factors. For this reason, appropriate footnotes are provided to explain the derivation and applicability of each emission factor determined in the analysis. Also, some of the average emission factors should be interpreted cautiously as noted in the paragraphs below.

The immediate emissions of NH_3 generated by the application of anhydrous NH_3 (Table 4-2) are quite low compared to the latent emissions of the same pollutant from the application of urea (Table 4-3). A substantial reduction in NH_3 emissions has been realized by the use of newer, subsurface injection methods in comparison to older techniques employing surface application. Second, the magnitude of the latent NH_3 emissions for solid, ammonia-containing fertilizers, such as urea, is highly affected by soil properties and biota population. Therefore, the candidate emission factor developed subsequently may not be indicative of the generation of this pollutant from other general soil types.

Another factor to note relates to the time period over which the latent emissions were generated and measured. Table 4-3 shows that widely varying time periods were monitored to determine the total mass emission factors in each study. From the references reviewed, it was determined that the majority of the emissions are created during a relatively limited period of time with lower emission rates occurring in the preceding and succeeding periods. The location of this maximum emission period on the temporal scale after application varies substantially as a function of fertilizer and application type, soil conditions, meteorology, and climatology. Furthermore, release rates show substantial diurnal variation, probably as a function of temperature. Thus, the temporal distribution of latent emissions is not well defined, and the usefulness of the factors for short-term emission estimates is questionable.

Finally, since all emission estimates were expressed in terms of equivalent nitrogen applied, appropriate calculations may be required to convert application rates to a common format for use with the emission factors shown in Tables 4-2 and 4-3. Table 4-4 provides the equivalent nitrogen content of several commonly used chemical fertilizers. It should be noted that the nitrogen content of a fertilizer is usually specified by the manufacturer on the container. If combinations of fertilizers are used, the overall nitrogen equivalent can be calculated by proportional multiplication of the individual factors provided in Table 4-4 based on the composition of the mixture.

4.2.2 Candidate Emission Factors

Using data from the references described in Section 4.1 of this report, candidate emission factors were compiled for inclusion in AP-42 for the application of anhydrous NH_3, urea, NH_4NO_3, $CA(NO_3)_2$, $NaNO_3$, NH_4Cl, and $(NH_4)_2SO_4$ fertilizers. An emission factor also was developed for the application of a mixture of fertilizers in which nitrogen is the primary component. These emission factors are summarized in Table 4-5. Candidate emission factors are presented for immediate, latent, and fugitive NH_3; latent NO; and latent N_2O. Latent NO_2 emissions are not included in the table because scientific evidence cited in recent technical papers do not support the soil emission of NO_2 but rather the oxidation of NO to NO_2. All of these emission factors are rated E because they are based on a combination of B-, C-, and D-rated data.

4.2.2.1 Ammonia (NH_3). Two emission factors were developed for NH_3 emissions from application of anhydrous NH_3. An emission factor for fugitive emissions directly off the application was obtained from the average of the 4 tests from Reference 12 shown in Table 4-2. The emission factor for immediate volatilization over a 1 to 3 hour period was obtained by averaging the factors of 22.4 lb/ton from References 7 and 8 and 2.30 lb/ton from Reference 12. The emission factor for latent NH_3 emissions from broadcast application of solid urea fertilizer is based on two tests documented in Reference 11.

4.2.2.2 Nitric Oxide (NO). The emission factor for latent NO emissions from broadcast application of fluid urea fertilizer is based on a single test documented in Reference 5, and the emission factor for latent NO emissions from broadcast application of fluid NH_4NO_3 fertilizer is based on the average of two tests documented in Reference 5. The emission factor for latent NO emissions from the application of fluid $Ca(NO_3)_2$ is based on two tests documented in Reference 4, and the emission factor for latent NO emissions from the application of fluid $NaNO_3$ is based on the average of a test documented in Reference 4 and the average of two tests documented in Reference 5. The emission factor for latent NO emissions from the application of fluid NH_4Cl is based on two tests documented in Reference 5 (a third test conducted on a grass-covered test plot was not used). The emission factor for latent NO emissions from broadcast application of solid NH_4NO_3 fertilizer is based on a test documented in Reference 1 and the average of two tests documented in Reference 41. The emission factor for latent NO emissions from broadcast application of solid $(NH_4)_2SO_4$ is based on a single test documented in Reference 39. All values in Table 4-5 were taken directly from appropriate averages in Table 4-3.

4.2.2.3 Nitrous Oxide (N_2O). The emission factor for latent N_2O emissions from broadcast application of fluid urea fertilizer was developed from one test documented in Reference 5 (11.5 lb/ton), one test documented in Reference 6 (11.3 lb/ton), and two tests documented in Reference 9 (7.96 lb/ton). The emission factor for latent N_2O emissions from broadcast application of fluid NH_4NO_3 fertilizer was developed from one test documented in Reference 5 (2.52 lb/ton) and the average of two tests documented in Reference 6 (3.62 lb/ton). The emission factor for latent N_2O emissions from application of fluid $Ca(NO_3)_2$ is based on two tests documented in Reference 9 (1.7 lb/ton). Two emission factors (one for standard tilling and one for a zero-till plot), both based on single tests documented in Reference 13, are presented for latent

N_2O emissions from the application of fluid $(NH_4)_2SO_4$. The emission factor for latent N_2O emissions from broadcast application of solid NH_4NO_3 fertilizer was developed from one test documented in Reference 1 (333 lb/ton), one test documented in Reference 14 (212 lb/ton), the average of two tests documented in Reference 41 (56.2 lb/ton), and the average of three tests documented in Reference 43 (45.8 lb/ton). Two emission factors for latent N_2O emissions from broadcast application of a mixture of nitrogen-based fertilizers were developed. An emission factor from a mixture that does not include manure was developed from one test documented in Reference 10, and an emission factor from a mixture that does include manure was developed from the average of two tests documented in Reference 2. The emission factor for latent N_2O emissions from application of solid $(NH_4)_2SO_4$ is based on a single test documented in Reference 39 (12.1 lb/ton).

As noted in Table 4-5, total mass emission factors tend to increase, at least partially, with oxidation number. This appears to be reasonable from a mechanistic viewpoint, taking into consideration the expected production of primary emissions in the soil matrix and their interaction with the atmosphere at the interface (see Figures 2-8 and 2-9).

There is substantial variability in the emissions data both from within sites and between different sites and the overall quality of the data is poor. Because of this, the emission factors in Table 4-5 provide only relatively crude estimates of the emissions resulting from the application of nitrogenous fertilizers, and should be used with caution. No attempt should be made to infer that there is any significant difference in emissions between fertilizer types or that any degree of emission control could result from the use of different types of fertilizers. Additional testing under controlled conditions using a standardized procedure would be required to improve the quality of the emission factors shown in Table 4-5.

REFERENCES FOR SECTION 4

1. M. F. Shepard et al., "The Production of Atmospheric NO_x and N_2O From a Fertilized Agricultural Soil," *Atmospheric Environment*, 25A(9):1961-1968, 1991.

2. R. L. Cates and D. R. Keeney, "Nitrous Oxide Production Throughout the Year From Fertilized and Manured Maize Fields," *Journal of Environmental Quality*, 16(4):443-447, 1987.

3. C. Johansson and L. Granat, "Emission of Nitric Oxide from Arable Land," *Tellus*, 36B:25-36, 1984.

4. C. Johansson, "Field Measurements of Emission of Nitric Oxide from Fertilized and Unfertilized Forest Soils in Sweden," *Journal of Atmospheric Chemistry*, 1:429-442, 1984.

5. R. Slemr and W. Seiler, "Field Measurements of NO and NO_2 Emissions from Fertilized and Unfertilized Soils," *Journal of Atmospheric Chemistry*, 2:1-24, 1984.

6. R. Slemr et al., "Nitrous Oxide Emissions from Fertilized and Unfertilized Soils in a Subtropical Region (Andalusia, Spain)," *Journal of Atmospheric Chemistry*, 1:159-169, 1984.

7. O. T. Denmead et al., "Atmospheric Dispersion of Ammonia During Application of Anhydrous Ammonia Fertilizer," *Journal of Environmental Quality*, 11(4):568-572 1982;

8. O. T. Denmead et al., "A Direct Field Measurement of Ammonia Emission After Injection of Anhydrous Ammonia," *Soil Science Society of America Journal*, 41:1001-1004, 1977.

9. G. A. Breitenbeck et al., "Effects of Different Nitrogen Fertilizers on Emissions of Nitrous Oxide from Soil," *Geophysical Research Letters*, 7(1), January 1980.

10. D. J. McKenney et al., "Nitrous Oxide Evolution Rates From Fertilized Soil: Effect of Applied Nitrogen," *Canadian Journal of Soil Science*, 60:429-438, 1980.

11. R. W. Sheard and E. G. Beauchamp, "Aerodynamic Measurement of Ammonia Volatilization from Ureas Applied to Bluegrass-Fescue Turf," Chapter 48, p. 549-556, in F. L. Lemaire (ed.), *Proceedings of 5th International Turf-grass Research Conference*, Avignon, France, 1-5 July 1985.

12. J. H. Baker et al., "Determination of Application Losses of Anhydrous Ammonia," *Agronomy Journal*, 51:361-362, 1959.

13. M. S. Aulakh, et al., "The Influence of Plant Residues on Denitrification Rates in Conventional and Zero Tilled Soils," *Soil Science Society of America Journal*, 48:790-794, 1984.

14. S. Hansen, et al., "N_2O and CH_4 Fluxes in Soil Influenced by Fertilization and Tractor Traffic," *Soil Biology and Biochemistry*, 25(5):621-630, 1993.

15. A. M. Petrovic, "The Fate of Nitrogenous Fertilizers Applied to Turfgrass," *Journal of Environmental Quality*, 19(1):1-14, 1990.

16. I. C. Anderson et al., "Enhanced Biogenic Emissions of Nitric Oxide and Nitrous Oxide Following Surface Biomass Burning," *Journal of Geophysical Research*, 93:3893-3898, 1988.

17. G. L. Grundman et al., "Field Soil Properties Influencing the Variability of Denitrification Gas Fluxes," *Soil Science Society of America Journal*, 2:1351-1355, 1988.

18. E. J. Williams et al., "Measurement of Soil NO_x Emissions in Central Pennsylvania," *Journal of Geophysical Research*, 93(D8):9539-9546, 1988.

19. I. C. Anderson and J. S. Levine, "Simultaneous Field Measurements of Biogenic Emissions of Nitric Oxide and Nitrous Oxide," *Journal of Geophysical Research*, 91(D1):965-976, 1987.

20. S. Titko et al., "Volatilization of Ammonia From Granular and Dissolved Urea Applied to Turfgrass," *Agronomy Journal*, 79:535-540, 1987.

21. W. A. Torello et al., "Ammonia Volatilization from Fertilized Turfgrass Stands," *Agronomy Journal*, 75:454-456, 1983.

22. A. M. Blackmer et al., "Diurnal Variability in Rate of Emission of Nitrous Oxide from Soils," *Soil Science Society of America Journal*, 46:937-942, 1982.

23. J. M. Duxbury and D. R. Bouldin, "Emissions of Nitrous Oxide from Soils," *Nature*, 298:462-464, 1982.

24. A. R. Mosier and G. L. Hutchinson, "Nitrous Oxide Emissions from Cropped Fields," *Journal of Environmental Quality*, 10(2):169-173, 1981.

25. B. W. Bach and N. M. Scott, "Sulphur Emissions in Relation to Sulphur in Soils and Crops," *Proceedings of the International Symposium on Sulphur Emissions and the Environment*, 1:242-254, 1979.

26. G. L. Terman, "Atmospheric Sulphur—The Agronomic Aspects," Technical Bulletin No. 23, The Sulphur Institute, Washington, DC, March 1978.

27. J. Hahn and C. Junge, "Atmospheric Nitrous Oxide: A Critical Review," *Zeitsohaft fur Naturforschung*, 32a:190-214, 1977.

28. "Effect of Increased Nitrogen Fixation on Stratospheric Ozone: Report 53, Iowa State University," Council for Agricultural Science and Technology, Ames, IA, 1976.

29. G. S. Cooper and R. L. Smith, "Sequence of Products Formed During Denitrification in Some Diverse Western Soils," *Soil Science Society Proceedings*, 27:659-662, 1963.

30. R.J. Valente and F.C. Thornton, "Emissions of NO From Soil at a Rural Site in Central Tennessee," *Journal of Geophysical Research*, 98(D9):16,745-16,753, 1993.

31. U. Skiba, et al., "Nitrification and Denitrification as Sources of Nitric Oxide and Nitrous Oxide in a Sandy Loam Soil," *Soil Biology and Biochemistry*, 25(11):1527-1536, 1993.

32. U. Skiba, et al., "Fluxes of Nitric Oxides From Agricultural Soils in a Cool Temperate Climate," *Atmospheric Environment*, 26A(14):2477-2488, 1992.

33. S.C. Jarvis, et al., "Patterns of Denitrification Loss From Grazed Grassland: Effects of N Fertilizer Inputs at Different Sites," *Plant and Soil*, 131:77-88, 1991.

34. C.W. Lindau, et al., "Rate of Accumulation and Emission of N_2, N_2O, and CH_4 From a Flooded Rice Soil," *Plant and Soil*, 129:269-276, 1990.

35. R. Brumme and F. Beese, "Effects of Liming and Nitrogen Fertilization on Emissions of CO_2 and N_2O From a Temporate Forest," *Journal of Geophysical Research*, 97(D12):12,851-12,858, 1992.

36. S.G. Nugroho and S. Kuwatsuka, "Concurrent Observation of Several Processes of Nitrogen Metabolism in Soil Amended With Organic Materials," *Soil Science and Plant Nutrition*, 38(4):593-600, 1992.

37. E.J. Williams, et al., "NO_x and N_2O Emissions From Soil," *Global Biogeochemical Cycles*, 6(4):351-388, 1992.

38. R.J. Valente, F.C. Thornton, and E.J. Williams, "Field Comparison of Static and Flow-Through Chamber Techniques for Measurement of Soil NO Emission," *Journal of Geophysical Research*, 100(D10):21147-21152, 1995.

39. G.L. Hutchinson and E.A. Brams, "NO Versus N_2O Emissions from an NH_4^+-Amended Bermuda Grass Pasture," *Journal of Geophysical Research*, 97(D9):9889-9896, 1992.

40. S.C. Jarvis, D.J. Hatch, and D.R. Lockyer, “Ammonia Fluxes from Grazed Grassland: Annual Losses from Cattle Production systems and Their Relation to Nitrogen Inputs,” *Journal of Agricultural Science*, 113:99-108, 1989.

41. F.C. Thornton and R.J. Valente, “Soil Emissions of Nitric Oxide and Nitrous Oxide from No-Till Corn, *Soil Science Society of America Journal*, 60:1127-1133, 1996.

42. K.F. Bronson, A.R. Mosier, and S.R. Bishnoi, “Nitrous Oxide Emissions in Irrigated Corn as Affected by Nitrification Inhibitors,” *Soil Science Society of America Journal*, 56:161-165, 1992.

43. G. Benckiser et al, “N_2O Emissions from Different Cropping Systems and from Aerated, Nitrifying and Denitrifying Tanks of a Municipal Waste Water Treatment Plant,” *Biology and Fertility of Soils*, 23:257-265, 1996.

44. J.R.M. Arah et al, “Nitrous Oxide Production and Denitrification in Scottish Arable Soils,” *Journal of Soil Science*, 42:351-367.

45. K. Minami, “The Effect of Nitrogen Fertilizer Use and Other Practices on Methane Emission from Flooded Rice,” *Fertilizer Research*, 40:71-84, 1995.

46. J.I. Yienger and H. Levy II, "Empirical Model of Global Soil-Biogenic NO_x Emissions," *Journal of Geophysical Research*, 100(D6):11447-11464, 1995.

47. N.S. Loftfield, et al., "Automated Monitoring of Nitrous Oxide and Carbon Dioxide Flux From Forest Soils," *Soil Science Society of America Journal*, 56:1147-1150, 1992.

48. R. Wassmann, et al., "Spatial and Seasonal Distribution of Organic Amendments Affecting Methane Emission From Chinese Rice Fields," *Biology and Fertility of Soils*, 22:191-195, 1996.

49. N.J. Hutchings, et al., "A Model of Ammonia Volatilization From a Grazing Livestock Farm," *Atmospheric Environment*, 30(4):589-599, 1996.

50. J.M. Duxbury, "The Significance of Agricultural Sources of Greenhouse Gases," *Fertilizer Research*, 38(2):151-163, 1994.

51. K. Murano, et al., "Gridded Ammonia Emission Fluxes in Japan," *Water, Air & Soil Pollution*, 85(4):1915-1920, 1995.

52. G. Zeeman, "Methane Production/Emission in Storages for Animal Manure," *Fertilizer Research*, 37(1):207-211, 1994.

53. S.C. Jarvis, et al., "Patterns of Methane Emission From Excreta of Grazing Animals," *Soil Biology & Biochemistry,"* 27(12):1581-1588, 1995.

54. T. Granli and O.C. Bøckman, "Nitrous Oxide (N_2O) Emissions From Soils in Warm Climates," *Fertilizer Research*, 42(1-3):159-163, 1995.

55. C. Ramos, "Effect of Agricultural Practices on the Nitrogen Losses to the Environment," *Fertilizer Research*, 43(1-3):183-189, 1996.

56. E. A. Davidson, et al., "Nitrous Oxide Controls and Inorganic Nitrogen Dynamics in Fertilized Tropical Agricultural Soils," *Soil Science Society of America Journal*, 60(4):1145-1152, 1996.

57. E. Matthews, "Nitrogenous Fertilizers: Global Distribution of Consumption and Associated Emissions of Nitrous Oxide and Ammonia," *Global Biochemical Cycles,* 8(4):411-439, 1994.

58. T. Al-Kanani, et al., "Division S-8- Nutrient Management & Soil & Plant Analysis, Ammonia Volatilization from Urea Amended with Lignosulfonate and Phosphoroamide," *Soil Science Society of America Journal,* 58(1):244-248, 1994.

59. D.W. Bussink, "Ammonia Volatilization from Grassland Receiving Nitrogen Fertilizer and Rotationally Grazed by Dairy Cattle," *Fertilizer Research,* 33(3):257-265, 1992.

60. R.R. Sharpe and L.A. Harper, "Soil, Plant and Atmospheric Conditions as they Relate to Ammonia Volatilization," *Fertilizer Research,* 42:149-158, 1995.

61. A. R. Mosier, "Nitrous Oxide Emissions From Agricultural Soils," *Fertilizer Research,* 37(3):191-200, 1994.

TABLE 4-1. DOCUMENTS REJECTED FOR EMISSION FACTOR DEVELOPMENT

Ref. No.	Reason for rejection
5	Secondary paper; no new air emission data presented; all secondary data simply presented as percentage loss
16	Combustion effects study; no process data from which to calculate emission factor because fertilizer not applied
17	Study of the effect of soil properties on denitrification; no process data to convert emission rates to emission factors
18	Excellent emission flux data, but no information presented on application rates
19	Study of the effects of soil properties and climatic conditions on NO and NO_2 flux rates with excellent flux data; no fertilizer application data to allow emission factor calculation
20	Laboratory studies of basic mechanisms; no data on actual field applications, and no application rates for laboratory studies
21	Laboratory study of the effects application technique on NH_3 volatilization rates; no field application data
22	Nonrepresentative sampling conditions make flux rate estimates unreliable
23	Limited data presented on application rates, but data on fertilizers and application methods insufficient to develop reliable emission factors
24	Reliable flux data and limited application rate data, but data on application methods and fertilizers insufficient to develop reliable emission factors
25	Secondary study of the sulfur cycle; no original emission test data
26	Secondary study of the sulfur soil cycle; no emission test data
27	Review study on the nitrogen cycle; no emission test data
28	Summary report on available information on the nitrogen cycle as of 1976; general global emission estimates presented, but no emission test data provided
29	Laboratory study of denitrification process; no actual field application data
30	A study of NO_x emissions from three land use types during summer and fall testing; detailed descriptions of new flux chamber and flux data were given but no identification of fertilizer type was provided
31	A greenhouse study of nitrous oxide and nitric oxide emissions with and without the addition of a nitrification inhibitor; no actual field application data
32	Study of factors controlling emissions in cool temperate climates; emission flux data presented but no sampling time intervals or description of application methods
33	Study of a wide range of fertilizer application rates, soil textures, grazed and ungrazed sites, soil moisture, and soil temperature on denitrification patterns; no data presented for fertilizer types or application methods and only general analytical methods provided
34	Reports flux data for nitrogen plus nitrous oxide combined but no separate data, no accumulation data, and no time duration data
35	Study of effects of lime on reducing nitrous oxide emissions from a beech forest; N_2O emissions unreliable because control plot had been fertilized for each of previous 5 years and no application methods given
36	Laboratory study of farmyard manure application; no actual field application data
37	A review article on NO_x and N_2O emissions from soil. Presents summaries of NO and N_2O emission flux data for several land use categories but no data on application rates or accumulated emissions.
38	Sampling began months after the fertilizer application. Study was performed to compare test methods, not to quantify emissions from fertilizer application.
40	Application of both solid and fluid fertilizer; report does not specify how much of each fertilizer was used
42	Unspecified application method
44	Time period not specified and total emissions not provided
45	Methane emissions from a flooded rice field; not applicable
46	No original data presented
47	Emissions not related to fertilizer application
48	Methane emissions from a rice field; not applicable

TABLE 4-1. (continued)

Ref. No.	Reason for rejection
49	No original test data presented
50	Global estimates; no original test data presented
51	No original test data presented
52	Methane emissions from fertilizer storage; not applicable
53	Methane emissions from manure not applied as a fertilizer
54	No original test data presented
55	No original test data presented
56	Total amount of fertilizer applied not specified
57	Global estimates; not presented by application method
58	Study on NH_3 inhibitors; soil losses measured, but actual air emissions were not measured
59	Emissions from fertilizer and livestock waste; cannot determine contribution from individual sources
60	No original test data presented
61	No original test data presented

TABLE 4-2. SUMMARY OF TEST DATA FOR IMMEDIATE EMISSIONS FROM THE APPLICATION OF ANHYDROUS AMMONIA
Emission Factor Rating: E

Pollutant[a]	Ref. No.	Type of fertilizer applied	Application rate, kg N/ha[b]	Total mass emission factor[c]		Data quality rating	Emission generation period, h[d]	Average emission factor[e]	
				g pollutant/ kg N applied	lb pollutant/ ton N applied			g pollutant/ kg N applied (s)	lb pollutant/ ton N applied (s)
NH_3	7, 8[f]	ℓ-NH_3 [g]	107	11.2[h]	22.4[h]	B	2	11.2	22.4
	12[h]	ℓ-NH_3 [g]	227	<1.21	<2.42	D	6	1.15 (0.89)[i]	2.30 (1.8)
			214	<1.21	<2.42		6		
			292	1.82	3.65		6		
			95	<1.21	<2.42		6		
			95	<1.21	<2.42		6		
			272	2.67	5.35		9		
	12[j]	ℓ-NH_3 [g]	288	0.012	0.024		3.3	0.203 (0.27)	0.405 (0.54)
			251	0.072	0.146		6.6		
			293	0.606	1.21		3.3		
			293	0.12	0.24		3.3		

[a]NH_3 = Vapor-phase ammonia volatilized after application of anhydrous ammonia.
[b]Amount of equivalent N added to the soil. 1 kg N/ha = 1.21 kg NH_3/ha; 1 ha = 10^4 m^2 = 2.471 acres.
[c]Total emissions to the atmosphere regardless of time period, expressed in terms of total nitrogen applied to the soil. 1 g/kg N = 2 lb/ton N. See appropriate appendix containing reference and hand calculations.
[d]Time period over which the emissions were measured.
[e]Arithmetic mean of total mass emission factors. Standard deviation (s) shown in parentheses.
[f]Emissions over 2 hour period after applications.
[g]Liquid anhydrous ammonia injected as a gas into the soil at a depth of at least 10 cm (4 in.).
[h]Emissions over 6 to 9 hour period after application.
[i]Mean values were calculated using half of the detection limit for those runs below detection.
[j]Fugitive emissions released immediately behind the blade.

TABLE 4-3. SUMMARY OF TEST DATA FOR LATENT EMISSIONS FROM THE APPLICATION OF NITROGEN FERTILIZERS

Pollutant gas[a]	Ref. No.	Type of applic.[b]	Type of fertilizer applied[c]	Application rate, kg N/ha[d]	Total mass emission factor[e]		Data quality rating	Emission generation period, days[f]	Average emission factor[g]	
					g pollutant/ kg N applied	lb pollutant/ ton N applied			g pollutant/ kg N applied (s)	lb pollutant/ ton N applied (s)
NH_3	11	DRY	Urea	100	183 81.1	366 162	D	8 5	132 (72)	264 (144)
NO	1	DRY	NH_4NO_3	11.5; 23.1; 34.6[h]	236	472	C	160	236	472
	3	NS	$Ca(NO_3)_2$	200[j]	4.28[j]	8.56[j]	D	365	4.28	8.56
	4	SPR	$Ca(NO_3)_2$	46.4 46.4	6.56 1.04	13.1 2.08	D	14.2 (340 h) 3.1 (75 h)	3.8 (3.9)	7.6 (7.8)
			$NaNO_3$	11.2	3.20	6.40		1.9 (45 h)	3.20	6.40
	5	SPR	$NaNO_3$ $NaNO_3$	100 100	0.738 3.02	1.48 30.4	D	18 30	1.88 (1.6)	3.76 (32)
			NH_4Cl NH_4Cl NH_4Cl[k]	100 100 100	32.5 26.4 11.9	65.1 52.8 23.9		18 30 18	29.4 (4.3) 11.9	58.4 (8.6) 23.8
			NH_4NO_3 NH_4NO_3	100 100	13.5 15.2	27.0 30.4		18 30	14.4 (1.2)	28.7 (2.1)
			Urea[k]	100	69.7	139		30	69.7	139
	39	DRY	$(NH_4)_2SO_4$	52	69.2	138	C	63	69.2	138
	41	DRY	NH_4NO_3	140 252	1.36 1.98	2.72 3.96	C	210	1.67 (0.44)	3.34 (0.88)
NO_2	5	SPR	$NaNO_3$ $NaNO_3$	100 100	2.37 4.56	4.74 9.12	D	18 30	3.47 (1.5)	6.93 (3.1)
			NH_4Cl NH_4Cl NH_4Cl[k]	100 100 100	38.9 19.8 4.08[m]	77.8 39.5 8.16[m]		18 30 18	29.4 (13.5) 4.08	58.7 (27.1) 8.16
			NH_4NO_3 NH_4NO_3	100 100	21.0 17.6	42.0 35.3		18 30	19.3 (2.4)	38.7 (4.7)
			Urea[k]	100	71.9	144		30	71.9	144

TABLE 4-3. (continued)

Pollutant gas[a]	Ref. No.	Type of applic.[b]	Type of fertilizer applied[c]	Application rate, kg N/ha[d]	Total mass emission factor[e]		Data quality rating	Emission generation period, days[f]	Average emission factor[g]	
					g pollutant/ kg N applied	lb pollutant/ ton N applied			g pollutant/ kg N applied (s)	lb pollutant/ ton N applied (s)
N_2O	1	DRY	NH_4NO_3	11.5; 23.1; 34.6[h]	167	333	C	130	167	333
	2	DRY	Manure + NH_4NO_3	181	56.6	113	C	330	56.6	113
			Manure + NH_4NO_3 + Urea	237	64.5	129		330	64.5	129
	5	SPR	NH_4NO_3	100	1.25	2.52	D	30	1.25	2.52
			Urea	100	5.77	11.5		30	5.77	11.5
	6	SPR	Urea	100	5.66	11.3	D	30	5.66	11.3
			NH_4NO_3 NH_4NO_3	100 100	1.26 2.36	2.52 4.72		30 10	1.81 (0.79)	3.62 (1.5)
	9	SPR	$Ca(NO_3)_2$	125 250	1.31 0.352	2.61 0.704	C	96 96	0.83 (0.68)	1.66 (1.4)
			Urea	125 250	4.35 3.61	8.70 7.22		96 96	3.98 (0.52)	7.96 (1.05)
			$(NH_4)_2SO_4$	125 250	5.71 3.56	11.4 7.12		96 96	4.64 (1.5)	9.27 (3.0)
	10	DRY	Urea; NH_4NO_3; KNO_3	112; 224; 336[n]	7.86	15.7	D	80	7.86	15.7
	13	SPR	$(NH_4)_2SO_4$	100 100[p]	33.9 146	67.8 292	D	92 92	33.9 146	67.8 292
	14	DRY SPR	NH_4NO_3 Manure	140 81 189	106 73.7 49.9	212 147.4 99.8	C	27 27 27	106 61.8	212 124
	39	DRY	$(NH_4)_2SO_4$	52	6.04	12.1	C	63	6.04	12.1
	41	DRY	NH_4NO_3	140 252	30.2 26.0	60.4 52.1	C	210	28.1 (3.0)	56.2 (6.0)

TABLE 4-3. (continued)

Pollutant gas[a]	Ref. No.	Type of applic.[b]	Type of fertilizer applied[c]	Application rate, kg N/ha[d]	Total mass emission factor[e]		Data quality rating	Emission generation period, days[f]	Average emission factor[g]	
					g pollutant/ kg N applied	lb pollutant/ ton N applied			g pollutant/ kg N applied (s)	lb pollutant/ ton N applied (s)
	43	DRY	NH_4NO_3	80 120 120	17.7 19.6 31.4	35.4 39.2 62.8	C	ND	22.9 (7.4)	45.8 (15)

[a]NH_3 = Vapor-phase ammonia; NO = nitric oxide; NO_2 = nitrogen dioxide; and N_2O = nitrous oxide.
[b]Method of fertilizer application: INJ = injection; SPR = liquid spray; DRY = dry broadcasting; NS = not specified.
[c]$Ca(NO_3)_2$ = calcium nitrate; $NaNO_3$ = sodium nitrate; NH_4NO_3 = ammonium nitrate; NH_4Cl = ammonium chloride; and $(NH_4)_2SO_4$ = ammonium sulfate.
[d]Amount of equivalent N added to the soil. 1 kg N/ha = 1.21 kg NH_3/ha = 2.14 kg urea/ha = 8.13 kg $(NH_4)_2SO_4$/ha = 7.30 kg $Ca(NO_3)_2$/ha = 2.86 kg NH_4NO_3/ha = 3.72 kg NH_4Cl = 6.06 kg $NaNO_3$/ha. 1 ha = 10^4 m^2 = 2.471 acres; 1 kg = 1,000 g = 2.2 lb.
[e]Total mass emissions to the atmosphere regardless of time period, expressed in terms of total nitrogen applied to the soil. 1 g/kg N = 2 lb/ton N. From appropriate appendix containing reference and hand calculations.
[f]Time period over which the emissions were measured.
[g]Arithmetic mean of data shown in columns 6 and 7. Standard deviation(s) shown in parentheses.
[h]Emissions are proportionally the same for all application rates between 11.5 and 34.6 kg N/ha.
[j]Calculated from the overall totals provided in the reference document.
[k]Grass-covered test plot.
[m]Plot acted as a nitrogen sink at a rate of −205 g NO_2/ha.
[n]Emissions are proportionally the same for all application rates and fertilizer types.
[p]Zero - till plot.

TABLE 4-4. EQUIVALENT NITROGEN CONTENTS OF COMMON CHEMICAL FERTILIZERS[a]

Type of fertilizer	Chemical formula	Nitrogen content[b] (weight percent)	Equivalent nitrogen content, lb fertilizer per lb N[c]
Anhydrous ammonia	NH_3	82.3	1.2
Urea	$CO(NH_2)_2$	46.7	2.1
Ammonium nitrate	NH_4NO_3	35.0	2.9
Ammonium sulfate	$(NH_4)_2SO_4$	21.2	4.7
Ammonium chloride	NH_4Cl	26.2	3.8

[a]Equivalents for pure chemicals.
[b]Nitrogen content (weight percent) = $\frac{\text{atomic weight of nitrogen}}{\text{molecular weight of fertilizer}} * 100\%$

e.g., for ammonia: $\text{wt\%} = \frac{14}{17} * 100\% = 82.3\%$

To determine the pounds of nitrogen per ton of fertilizer, multiply the nitrogen content (weight percent) times the tons of fertilizer. Then convert tons to pounds by multiplying by 2,000.

e.g., for one ton of urea:

1 ton x 46.7 x 1/100 = 0.467 tons of nitrogen
0.467 tons x 2,000 lb/ton = 934 lb of nitrogent/ton of urea

For fluid fertilizers, the weight of the solvent should <u>not</u> be included in calculating the weight of the fertilizer.

[c]Amount of fertilizer (lb) to produce 1 lb equivalent nitrogen application. To convert pounds of nitrogen to pounds of fertilizer, multiply pounds of nitrogen by the equivalent nitrogen content.

e.g., 934 lb N x 1.2 lb ammonia/lb N = 1,121 lb ammonia

TABLE 4-5. SUMMARY OF EMISSION FACTORS FOR FERTILIZER APPLICATION
Emission Factor Ratings: E

Application/fertilizer	PM-10	NH_3	NO	N_2O
Gaseous fertilizer:				
• Injection				
-- Anhydrous ammonia	NA	12[a] 0.41[b]	ND	ND
Fluid fertilizer:				
• Injection or deep band				
-- Aqueous ammonia	NA	ND	ND	ND
-- Urea	NA	ND	ND	ND
-- Ammonium nitrate	NA	ND	ND	ND
-- Nitrogen mixtures[c]	NA	ND	ND	ND
• Band, row, and broadcast application[d]				
-- Urea	ND	ND	140[e]	10[f]
-- Ammonium nitrate	ND	ND	29[e]	3.0[g]
-- Nitrogen mixtures[c]	ND	ND	ND	ND
-- Calcium nitrate	ND	NA	7.6[h]	1.7[j]
-- Sodium nitrate	ND	NA	5.1[k]	ND
-- Ammonium chloride	ND	ND	58[e]	ND
-- Ammonium sulfate	ND	ND	ND	39[m] 290[n]
• Aerial				
• Irrigation				
Solid fertilizer:				
• Broadcast application[d]				
-- Urea	ND	260[p]	ND	ND
-- Ammonium nitrate	ND	ND	240[q]	160[r]
-- Nitrogen mixtures[c]	ND	ND	ND	
-- without manure				16[s]
-- with manure				120[t]
-- Ammonium sulfate	ND	ND	140[u]	12[u]

ND = No data available.
NA = Not applicable.
All emission factors in terms of pounds of pollutant per ton of nitrogen in fertilizer applied (lb pollutant/T N applied).

[a]References 7, 8, 12. Volatilization immediately (1-3 hrs) after application (source No.2 on Figure 2-7a). To convert from lb/ton to kg/Mg, multiply by 0.5.
[b]Reference 12. Fugitive emissions (6 to 9 hr) after application (source No. 3 on Figure 2-7a).
[c]Fertilizer mixtures in which nitrogen is the predominant component.
[d]Latent emissions from soil reactions.
[e]Reference 5.

[f]References 5, 6, 9.

TABLE 4-5. (continued)

[g]References 5, 6.
[h]Reference 4.
[j]Reference 9.
[k]References 4, 5.
[m]References 9, 13. Conventional till plots.
[n]Reference 13. Zero-till plot.
[p]Reference 11.
[q]References 1, 41.
[r]References 1, 14, 41, 43.
[s]Reference 10.
[t]Reference 2. Mixture of feedlot cattle manure and added nitrogen source (ammonium nitrate, urea).
[u]Reference 39.

5. PROPOSED AP-42 SECTION 9.2.1

A proposed AP-42 section for fertilizer application is presented on the following pages as it would appear in the document.