Emissions From Animal Feeding Operations

Draft

U.S. Environmental Protection Agency

Emission Standards Division
Office of Air Quality Planning and Standards
Research Triangle Park, NC 27711

August 15, 2001

EPA Contract No. 68-D6-0011
Task Order 71

This page intentionally left blank.

Table of Contents

Page

Executive Summary xi

1.0 INTRODUCTION 1-1

1.1 References 1-4

2.0 AIR EMISSIONS FROM FEEDLOT OPERATIONS 2-1

2.1 General Characteristics of Animal Feeding Operations 2-1

2.2 Substances Emitted 2-3
2.2.1 Ammonia 2-6
2.2.2 Nitrous Oxide 2-7
2.2.3 Methane 2-8
2.2.4 Carbon Dioxide 2-9
2.2.5 Volatile Organic Compounds 2-10
2.2.6 Hydrogen Sulfide and Other Reduced Sulfur Compounds 2-10
2.2.7 Particulate Matter 2-11
2.2.8 Odors 2-13

2.3 Summary of Factors Affecting Emissions 2-14

2.4 References 2-16

3.0 BEEF CATTLE FEEDING OPERATIONS 3-1

3.1 Size and Location of Industry 3-1

3.2 Beef Production Cycles 3-4
3.2.1 Cow-Calf Operations 3-4
3.2.2 Backgrounding Operations 3-5
3.2.3 Finishing or Feedlot Operations 3-5

3.3 Beef Confinement Practices 3-6

3.4 Feeding Practices 3-7

3.5 Manure Management Practices 3-8
3.5.1 Manure Collection 3-9
3.5.2 Manure Storage, Stabilization, Disposal, and Separation 3-10

3.6 Beef Model Farms 3-12
3.6.1 Confinement 3-13
3.6.2 Solids Separation 3-14
3.6.3 Storage and Stabilization 3-14
3.6.4 Land Application 3-14

Table of Contents (Cont.)

Page

3.7 References 3-16

4.0 DAIRY OPERATIONS 4-1

4.1 Size and Location of Industry 4-1

4.2 Production Cycles 4-5
4.2.1 Mature Cows (Lactating and Dry Cows) 4-5
4.2.2 Calves and Heifers 4-6
4.2.3 Veal Calves 4-6

4.3 Confinement Practices 4-7

4.4 Feeding Practices 4-11

4.5 Manure Management Practices 4-12
4.5.1 Dairy Manure Collection and Transport 4-13
4.5.2 Manure Storage, Stabilization, and Separation 4-15

4.6 Dairy and Veal Model Farms 4-18
4.6.1 Dairy Model Farms 4-18
4.6.2 Veal Model Farms 4-24

4.7 References 4-26

5.0 SWINE FEEDING OPERATIONS 5-1

5.1 Size and Location of Swine Industry 5-1

5.2 Swine Production Cycles 5-2

5.3 Swine Confinement Practices 5-7

5.4 Swine Manure Management Practices 5-9
5.4.1 Collection Practices 5-10
5.4.2 Swine Manure Storage and Stabilization 5-11
5.4.3 Swine Manure Land Application 5-16
5.4.4 Swine Mortality 5-16

5.5 Swine Model Farms 5-18
5.5.1 Confinement 5-19
5.5.2 Storage and Stabilization 5-19
5.5.3 Land Application 5-20

5.6 References 5-21

Table of Contents (Cont.)

Page

6.0 POULTRY FEEDING OPERATIONS 6-1

6.1 Broilers 6-1
6.1.1 Size and Location of the Broiler Industry 6-2
6.1.2 Broiler Production Cycles 6-4
6.1.3 Broiler Confinement 6-6
6.1.4 Broiler Manure Management 6-6
6.1.4.1 Broiler Manure Collection 6-7
6.1.4.2 Broiler Manure Storage 6-8
6.1.5 Mortality Management 6-8

6.2 Laying Hens 6-9
6.2.1 Size and Location of the Table Egg Industry 6-10
6.2.2 Layer Production Cycles 6-12
6.2.3 Layer Confinement Practices 6-12
6.2.4 Layer Manure Management 6-14
6.2.5 Mortality Management 6-16

6.3 Turkeys 6-16
6.3.1 Size and Location of Turkey Industry 6-16
6.3.2 Turkey Production Cycles 6-20
6.3.3 Turkey Confinement Practices 6-20
6.3.4 Turkey Manure Management 6-21
6.3.5 Mortality Management 6-21

6.4 Poultry Model Farms 6-22
6.4.1 Confinement 6-23
6.4.2 Storage and Stabilization 6-24
6.4.3 Land Application 6-25

6.5 References 6-26

7.0 LAND APPLICATION 7-1

7.1 Methods of Land Application 7-2
7.1.1 Surface Application 7-2
7.1.2 Incorporation 7-3
7.1.3 Injection 7-4

7.2 Emissions from Land Application 7-4
7.2.1 Short-Term Emissions 7-5
7.2.2 Long-Term Emissions 7-6

7.3 References 7-8

Table of Contents (Cont.)

Page

8.0 EMISSIONS FROM MODEL FARMS 8-1

8.1 Development of Emission Factors From Literature Sources 8-1

8.2 Other Methods Used to Calculate Emissions 8-5
8.2.1 Ammonia 8-6
8.2.2 Nitrous Oxide 8-7
8.2.3 Hydrogen Sulfide 8-11
8.2.4 Methane 8-12
8.2.5 Volatile Organic Compounds 8-16

8.3 Estimation of Nitrogen, Sulfur, And Volatile Solids Produced in Manure . . . 8-18
8.3.1 Daily Nitrogen, Sulfur, and Volatile Solids Excretion Rates 8-18
8.3.2 Calculation of Nitrogen, Sulfur, and Volatile Solids Excreted Annually 8-19

8.4 Emission Factors and Estimates from Model Farms 8-23
8.4.1 Beef Model Farms 8-25
8.4.2 Veal Model Farms 8-25
8.4.3 Dairy Model Farms 8-27
8.4.4 Swine Model Farms 8-33
8.4.5 Poultry Model Farms 8-33

8.5 Comparison of Emission Estimates to Manure Characteristics 8-40

8.6 References 8-43

9.0 SUMMARY OF EMISSION CONTROL METHODS 9-1

9.1 Particulate Matter Emission Controls 9-2
9.1.1 Water Application 9-8
9.1.2 Oil Application 9-9
9.1.3 Modification of Feed Handling and Delivery System 9-10
9.1.4 Filtration 9-11
9.1.5 Ionization 9-12
9.1.6 Wet Scrubbing 9-13
9.1.7 Covering of Manure Stockpiles 9-14

9.2 Gaseous Emission Controls 9-15
9.2.1 Confinement Design and Operating Methods 9-16
9.2.2 Acidification of Manure in Confinement Housing 9-17
9.2.3 Biofiltration of Confinement Housing Exhaust 9-19
9.2.4 Gas Absorption of Confinement Housing Exhaust 9-20
9.2.5 Bioscrubbing of Confinement Housing Exhaust 9-22
9.2.6 Ozonation of Confinement Housing Air 9-23

Table of Contents (Cont.)

Page

9.2.7 Chemical Oxidation of Liquid Manure Storage 9-24
9.2.8 Manure additives 9-25
9.2.9 Covering of Liquid Manure Storage Tanks and Ponds 9-26
9.2.10 Covering of Anaerobic Lagoons with Biogas Collection and Combustion 9-29
9.2.11 Anaerobic Digestion 9-30
9.2.12 Biocovers for Liquid Manure Storage and Anaerobic Lagoons 9-32
9.2.13 Composting of Manure Solids 9-33
9.2.14 Diet Manipulation 9-34
9.2.15 Carcass Disposal 9-36

9.3 Land Application 9-37
9.3.1 Particulate Matter Emissions From Land Application 9-38
9.3.2 Gaseous Emissions From Land Application 9-38

9.4 References 9-41

10.0 GLOSSARY 10-1

Appendix A Listing of Chemical Substances Identified in And Around Livestock Manure (Adapted From O'Neill And Phillips 1992)
Appendix B Complete List of References Reviewed
Appendix C Summary Sheets For References Where Data Were Extracted
Appendix D Emission Data Not Used in Report
Appendix E Calculation of Emission Factors Translated From One Animal Species to Another
Appendix F Example Calculation of Methane Emissions from Anaerobic Lagoons
Appendix G AFO Model Farms

List of Tables

Table		Page
2-1	Common Types of Animal Confinement and Manure Management Systems	2-3
2-2	Substances Potentially Emitted from Animal Feeding Operations	2-4
2-3	Factors That Affect Emissions	2-15
3-1	Number of Beef Feedlots by Size in 1997	3-2
3-2	Beef Cattle Sold in 1997	3-3
3-3	Beef Cow Inventory by State in 1997	3-3
4-1	Number of Dairy Farms by Herd Size in 1997	4-2
4-2	Dairy Cow Inventory by State	4-3
4-3	Total Milk Cows by Size of Operation in 1997	4-4
4-4	Percentage of U.S. Dairies by Housing Type and Animal Group in 1995	4-8
5-1	Number of Swine Operations by Size in 1997	5-2
5-2	U.S. Swine Operations and Inventory by Farm Size in 1997	5-3
5-3	Swine Inventory by State in 1997	5-4
5-4	Frequency of Production Phase in1995 (Percent of Farms)	5-7
5-5	Typical Swine Housing Confinement Facilities	5-8
5-6	Housing Frequency in 1995 (Percent of Farms)	5-9
5-7	Frequency (in Percent) of Operations in 1995 that Used Certain Manure Storage Systems for Operations That Marketed 5,000 or More Hogs In A Twelve Month Period (Percent of Farms)	5-16
5-8	Method of Manure Application on Land in 1995	5-17
5-9	Method of Mortality Disposal	5-17
6-1	Broiler Operations and Production in the United States	6-2
6-2	Number of Broiler Operations by Size in 1997	6-3

List of Tables (Continued)

Table **Page**

6-3 Broiler Inventory by State 6-5

6-4 Layer Operations and Production in the United States 6-10

6-5 Number of Layer Operations by Size in 1997 6-11

6-6 Layer Inventory by State 6-13

6-7 Primary Manure Handling Method by Region (Percent of Farms) 6-15

6-8 Turkey Operations and Production in the United States 6-17

6-9 Number of Turkey Operations by Size in 1997 6-18

6-10 Turkey Inventory by State 6-19

8-1 References Identified with Useful Emission Information 8-4

8-2 Summary of Emission Estimation Methods 8-6

8-3 Sources of Ammonia Emission Factors 8-8

8-4 Nitrous Oxide (MFN_20) Factors 8-9

8-5 Sources of Hydrogen Sulfide Emission Factors 8-12

8-6 Methane Production Potentials From Livestock and Poultry Manures 8-14

8-7 Methane Conversion Factors for Various Livestock and Poultry Manure Management System Components 8-15

8-8 Rates of Nitrogen, Volatile Solids, and Sulfur Excretion By Livestock and Poultry, lb per day per 1,000 lb live weight 8-20

8-9 Typical Animal Live Weights and Production Cycles 8-22

8-10 Quantities of Volatile Solids, Nitrogen, and Sulfur Excreted Per 500 Animal Unit Model Farm 8-23

8-11 Summary of Beef Emission Factors 8-26

8-12 Summary of Emissions from Beef Model Farms (tons/yr-500 AU farm) 8-26

List of Tables (Continued)

Table **Page**

8-13 Summary of Veal Emission Factors 8-27

8-14 Summary of Emissions from Veal Model Farms (tons/year-500 AU farm) 8-28

8-15 Summary of Dairy Emission Factors 8-29

8-16 Summary of Emissions from Dairy Model Farms (tons/yr-500 AU farm) 8-30

8-17 Summary of Swine Emission Factors 8-34

8-18 Summary of Emissions from Swine Model Farms (tons/yr-500 AU farm) 8-35

8-19 Summary of Poultry Emission Factors 8-36

8-20 Summary of Emissions from Poultry Model Farms (tons/yr-500 AU farm) 8-38

8-21 Comparison of Nitrogen, Sulfur, and Volatile Solids in Substances Emitted to Manure Loading 8-41

9-1 Summary of Control and Suppression Techniques for Particulate Matter Emissions . . 9-3

9-2 Summary of Inhibition, Suppression, and Control Techniques for Ammonia Emissions 9-3

9-3 Summary of Control and Suppression Techniques for Hydrogen Sulfide Emissions . . 9-5

9-4 Summary of Control and Suppression Techniques for Methane Emissions 9-6

9-5 Summary of Control and Suppression Techniques for Volatile Organic Compound Emissions 9-7

Executive Summary

In 1997, the U.S. Department of Agriculture reported 450,000 animal feeding operations in beef, dairy, swine, and poultry sectors. While most of these operations are small, the majority of meat and dairy production occurs at large animal feeding operations. Over the past two decades, market forces and technological changes have promoted closure of many small operations and a significant expansion of large, confined operations. Individual operations can confine as many as 10's or 100's of thousands of animals each year. Currently, the trend in most animal sectors is for continued consolidation of production at even larger operations. These large operations must store large amounts of manure because the amount of manure generated exceeds the agronomic demands of local crop land. The microbial breakdown of the organic carbon and nitrogen compounds in manure can result in odors and other emissions to the air.

This report presents the results of a preliminary investigation into air pollution from large animal feeding operations (AFOs) for the beef, dairy, swine, and poultry (broilers, layers, and turkeys) animal sectors. An AFO defined by the U.S. Environmental Protection Agency is a lot or facility where: 1) livestock or poultry have been, are, or will be confined and fed for a total of 45 days or more in any 12-month period, and 2) crops, vegetative forage cover, or post-harvest residues are not sustained in the normal growing season over any portion of the lot or facility (40 CFR 122.23). The stipulation of the absence of vegetative cover intentionally excludes operations where animals are maintained on pasture or rangeland.

Substances Emitted

Animal feeding operations can emit ammonia (NH_3), nitrous oxide (N_2O), hydrogen sulfide (H_2S), carbon dioxide, methane (CH_4), total reduced sulfur (TRS) compounds, volatile organic compounds (VOC), hazardous air pollutants (HAP), and particulate matter (including PM 10 and PM 2.5). The substances emitted and the quantity of emissions can vary substantially depending on the design and operation of each facility. Factors that influence emissions include feeding regiment, the type of confinement facility, type of manure management system (storage, handling, and stabilization), and the method of land application. The substances emitted will

vary depending on whether the microbial breakdown of manure occurs in an aerobic or anaerobic (i.e., absence of free oxygen) environment.

These emissions have a variety of effects. The compounds primarily responsible for the odors associated with AFOs are VOC, hydrogen sulfide, and other reduced sulfur compounds. VOC also contributes to the formation of atmospheric ozone, which is a respiratory irritant. Some VOC are designated in the Clean Air Act as hazardous air pollutants. Ammonia also is a source of odor from AFOs but to a lesser degree because ammonia rapidly disperses in the air. Once released to the atmosphere, ammonia is readily deposited back to the earth in one of two forms. Ammonia rapidly adheres to particles in the air due to its cohesive properties. Ammonia also can be converted to ammonium sulfate or ammonium nitrate, which contribute to fine particulate concentrations (PM 2.5). When deposited back to the earth, these aerosols contribute to nutrient over-enrichment in aquatic systems and acidification of the environment. Carbon dioxide, methane, and nitrous oxide are odorless and nontoxic, but are considered to be greenhouse gases.

Study Methodology

The fundamental goal of this study was to develop a method for estimating emissions at the individual farm level that reflects the different animal production methods that are commonly used at commercial scale operations. The approach to this study was to: (1) identify the manure management systems typically used by large animal feeding operations for each animal sector, (2) develop model farms based on individual elements of the those systems (i.e. confinement, manure collection system, storage sites, land application), (3) search the literature for emission factors that could be associated with each element of the model farm, and (4) apply the emission factors to the model farms to estimate annual mass emissions. The report also summarizes information on emission control techniques that was found in the literature.

A set of 23 model farms was developed (Table 1). Each model farm included three variable elements: a confinement area, manure management system (which may include solids separation, manure storage, and stabilization), and a land application method. The models do not

Table 1.

Summary of Model Farms

Animal	Model Farm ID	Elements of Model Farms			
		Confinement and Manure Collection System	Solids Separation Activities	Manure Storage and/or Stabilization	Land Application
Beef	B1A	Drylot (scraped)	Solids separation for run-off (using a settling basin)	Storage pond (wet manure) and stockpile (dry manure)	Liquid manure application; and solid manure application
	B1B		No solids separation		
Veal	V1	Enclosed house (flush)	None	Anaerobic lagoon	Liquid manure application
	V2	Enclosed house w/pit storage	None	None	Liquid manure application
Dairy	D1A	Freestall barn (flush); milking center (flush); drylot (scraped)	Solids separation	Anaerobic lagoon (wet manure) and stockpile (dry manure)	Liquid manure application; and solid manure application
	D1B		No solids separation		
	D2A	Freestall barn (scrape); milking center (flush); drylot (scraped)	Solids separation	Anaerobic lagoon (wet manure) and stockpile (dry manure)	Liquid manure application; and solid manure application
	D2B		No solids separation		
	D3A	Milking center (flush); drylot (scraped)	Solids separation	Storage pond (wet manure) and stockpile (dry manure)	Liquid manure application; and solid manure application
	D3B		No solids separation		
	D4A	Drylot feed alley (flush); milking center (flush); drylot (scraped)	Solids separation	Anaerobic lagoon (wet manure) and stockpile (dry manure)	Liquid manure application; and solid manure application
	D4B		No solids separation		
Swine	S1	Enclosed house (flush)	None	Anaerobic lagoon	Liquid manure application
	S2	Enclosed house (pit recharge)	None	Anaerobic lagoon	Liquid manure application
	S3A	Enclosed house (pull plug pit)	None	Anaerobic lagoon	Liquid manure application
	S3B			External storage tank or pond	Liquid manure application
	S4	Enclosed house (w/pit storage)	None	None	Liquid manure application
Poultry-broilers	C1A	Broiler house w/bedding	None	Covered storage of cake; and open litter storage	Solid manure application

Table 1.

Summary of Model Farms (Continued)

Animal	Model Farm ID	Elements of Model Farms			
		Confinement and Manure Collection System	Solids Separation Activities	Manure Storage and/or Stabilization	Land Application
Poultry-broilers (Continued)	C1B	Broiler house w/bedding	None	Covered storage of cake	Solid manure application
Poultry-layers	C2	Caged layer high rise house	None	None	Solid manure application
	C3	Cage layer house (flush)	None	Anaerobic lagoon	Liquid manure application
Poultry-turkeys	T1A	Turkey house w/bedding	None	Covered storage of cake; and open litter storage	Solid manure application
	T1B			Covered storage of cake	

precisely describe every AFO in the U.S. due to the variety of designs that are characteristic of this industry. However, the models are intended to represent the great majority of commercial scale AFOs (500 animal unit capacity or larger) for purposes of representing the principal factors that influence emissions and the feasibility of emissions control.

The literature search returned nearly 500 potential emission data sources. While a large number of studies exist, there were a limited number that contained data on which emission factors could be developed. Where emission factors were not found, attempts were made to estimate emissions based on the responsible microbial and chemical mechanisms.

Results

Emissions were estimated for ammonia, nitrous oxide, methane, hydrogen sulfide, PM, and VOC. All PM emission estimates are for total suspended particulates except for beef feedlots, which are PM 10. Information was not available to estimate emissions of total or speciated HAP, total reduced sulfur compounds (other than hydrogen sulfide), PM 10 (other than

for beef cattle), and PM 2.5. Emissions were not estimated for carbon dioxide. Carbon dioxide emissions from manure are releases of carbon that were sequestered via photosynthesis in the past one to three years. The carbon emitted is part of a cycling of carbon from the atmosphere to crops to animals and back into the atmosphere over a relatively short period of time. Therefore, emissions of carbon dioxide from manure decomposition were judged not to contribute to a net increase in greenhouse gases in the long term.

Methane emissions tend to vary regionally depending on seasonal temperature profiles. As a result, methane emissions were not estimated for the model farms, but were estimated in Chapter 8.0 for an anaerobic lagoon in a cold climate and warm climate.

Table 2 summarizes the annual emission estimates for the model farms. The model farms were sized for a confinement capacity of 500 animal units. An animal unit as defined by EPA equates the number of animals to the equivalent water pollution potential of a 1,000 pound beef cow (see the glossary for the definition of animal unit). In general, there were significant data deficiencies for all the animal sectors. The study was unable to provide emission estimates for every substance emitted at every emission point at the model farms. Therefore, the emission estimates in Table 2 are partial estimates that represent the minimum level expected at typical operations.

A summary of the major emission data gaps for each animal sector is presented in Table 3. The table lists the model farm components for which emission factors could not be developed, but for which it was concluded that emissions would be expected based on principles of microbial decomposition and chemistry.

Data Limitations

Data deficiencies prevented the development of emission factors for all elements of the model farms. To develop emission factors, the ability to characterize emissions on an annual basis and in terms of a unit of production capacity was essential. For most of the references

Table 2.

Summary of Emissions from Model Farms (tons/yr-500 animal units)

Animal Sector	Model Farm ID	NH_3	N_2O	H_2S	VOC	PM
Beef	B1A	11.2	1.4	a	a	3.2[b]
	B1B	11.2	1.4	a	a	3.2
Veal	V1	a	0.005	a	0.02	Neg.[c]
	V2	a	a	a	a	Neg.[c]
Dairy	D1A	26	2.3	3.9	1.1	0.6
	D1B	26	2.3	3.9	1.1	0.6
	D2A	23	2.3	1.0	1.1	0.6
	D2B	23	2.3	1.0	1.1	0.6
	D3A	8.7	2.3	a	a	0.6
	D3B	8.7	2.3	a	a	0.6
	D4A	19	2.3	3.9	1.1	0.6
	D4B	19	2.3	3.9	1.1	0.6
Swine	S1	15	0.02	2.6	0.6	2.0
	S2	15	0.02	0.9	0.6	2.0
	S3A	15	0.02	0.9	0.6	2.0
	S3B	11	0.02	a	a	2.0
	S4	12	0.02	0.3	a	2.0
Poultry-broilers	C1A	13	1.8	a	a	2.1
	C1B	13	1.2	a	a	2.1
Poultry-layers	C2	13	0.9	Neg.[c]	Neg.[c]	a
	C3	22	0.09	1.2	0.98	a
Poultry-turkey	T1A	27	2.7	a	a	4.7
	T1B	26	1.8	a	a	4.7

[a] Emissions are expected but information is not available to estimate emissions.
[b] All PM estimates are for total suspended particulates except for beef, which is PM 10.
[c] No emissions or negligible emissions are expected.

Note: In most cases, the table reflects partial estimates of emissions because of data gaps for certain manure processing steps within the model farms.

Table 3.

Data Gaps for Emission Factors

Sector	Model Farm Component	Pollutants
Beef	Storage ponds	H_2S, VOC
	Solid manure application	N_2O
	Liquid Manure application	NH_3, N_2O, H_2S, VOC
Dairy	Solid manure land application	NH_3 N2O
	Liquid manure land application	N_2O, H_2S, VOC
	Storage ponds	NH_3, H_2S, VOC
	Drylot feed alley (flush)	NH_3
Veal	Confinement with pit storage	NH_3, H_2S, VOC
	Anaerobic lagoon	NH_3, N_2O, H_2S, VOC
	Liquid manure land application	NH_3, N_2O, H_2S, VOC
Swine	House with pit recharge	H_2S, VOC
	House with pull plug pit	H_2S, VOC
	House with pit storage	VOC
	Liquid manure land application	N_2O, VOC
	External storage	NH_3, H_2S, VOC
Broilers	Solid manure land application	N_2O
Layers	Caged layer flush house	H_2S, VOC, PM
	Caged layer high rise house	PM
	Solid manure land application	N_2O, PM
	Liquid manure land application	H_2S, VOC
Turkeys	Solid manure land application	N_2O

reviewed, this was not possible. Typically, the information was limited to point estimates of concentrations derived from air sampling over a limited period of time without the necessary background information to translate the concentration information into emission factors. For example, information for animal confinement facilities about building size, housing capacity, or ventilation rate at the time of air sampling often was lacking. In addition, some articles lacked information about the type of manure management system and the characteristics of manure present. Studies that lacked such information were not used.

In many cases, the accuracy of the emission factors that were developed based on the available data in the literature is a concern. In some instances, factors were based on a single study or only a few studies. Where it was possible to develop emission factors based on more than one independently conducted study, the range of emissions in some cases was substantial. On the basis of this observed variability, the validity or representativeness of factors derived from a single reference is questionable. This result is not unanticipated given the complexity of the mechanisms responsible for these emissions and the inability of limited monitoring efforts to capture all the effects of critical variables (e.g., seasonal temperature variations).

One of the more significant findings that emerged from this study was the absence of standardized methodologies for quantifying emissions from AFOs. Although generally accepted sample collection techniques typically have been used, test conditions that will provide representative emission estimates and provide a standard basis for comparisons have not been established. In addition, a standard basis for reporting emissions is lacking. For example, in some cases measured emissions could not be linked to a unit of confinement capacity or to the mass of an animal product produced.

Emission Control Techniques

The literature search identified a number of control practices that in theory are possible options for reducing the emissions from confinement facilities, manure management systems, and land application. Chapter 9.0 identifies more than 20 technologies that have been used to some extent at full-scale operations in the industry. However, for many of the technologies there is limited information about the potential effectiveness and cost that is derived from long-term operating experience under field conditions. For most of these practices, information that is available is the product of pilot studies, or relatively short-term research on commercial scale systems. Many of the studies did not use standard analytical methodologies for measuring emissions, and cost estimates often were based on empirical information rather than principles of engineering economics. Thus, more study is needed to establish the types and sizes of operations to which these technologies are technically and economically feasible.

1.0 INTRODUCTION

Animal agriculture in the U.S. is a $100 billion per year business (GAO, 1999). Most of this production occurs in agricultural enterprises where animals are raised in confinement, rather than on pastures, fields, or rangeland. There are about 1.2 million livestock and poultry farms in the United States. About one-third of these farms raise animals in confinement, qualifying them as an animal feeding operation (USDA, 1999).

This report is part of a preliminary investigation into air emissions from large animal feeding operations. This report addresses the beef, dairy, swine, and poultry (broiler, laying hens, and turkey) sectors. These animal sectors comprise the majority of animals raised in confinement in the U.S. There are more than 500,000 operations that raise sheep, horses, goats, mules, rabbits, ducks, and geese (USDA, 1999). But these operations are mostly small and do not generate emissions of the same magnitude as other animal sectors. These species, therefore, are not covered by this report. The objectives of this investigation were to characterize the magnitude of emissions from different livestock operations, assess the value of currently available information to support future air pollution policy decisions regarding AFOs, and identify areas where targeted research is necessary.

As defined by the U.S. Environmental Protection Agency (40 CFR 122.23), an AFO is a facility where: 1) livestock or poultry are confined and fed for a total of 45 days or more in any 12-month period, and 2) vegetative cover of any significance (crops, vegetative forage growth, or post-harvest residues) is lacking. To be considered an AFO, it is not necessary that the same animals are confined for 45 days. The 45 days do not have to be consecutive, and the 12-month period does not have to correspond to a calendar year. The stipulation of the absence of vegetative cover of any significance intentionally excludes operations where animals are maintained on pasture or rangeland. An AFO includes the confinement facility, manure management systems, and the manure application site.

The fundamental goal of this study was to develop a method for estimating emissions at the individual farm level that reflects the different animal production methods that are commonly

used at commercial scale operations. The approach to this study was to: (1) identify the manure management systems typically used by large animal feeding operations for each animal sector, (2) develop model farms based on individual elements of the those systems (i.e. confinement, manure collection system, storage sites, land application), (3) search the literature for emission factors that could be associated with each element of the model farm, and (4) apply the emission factors to the model farms to estimate annual mass emissions. The report also summarizes information on emission control techniques that are being used in the industry, as reported in the literature. At the outset, it was recognized that there were insufficient data and scientific research to develop a complete set of emission estimates for the model farms. The study results, however, provide a framework for assessing emissions, identifying important data gaps, and focusing future study.

Chapter 2.0 of this report describes the substances emitted from AFOs and explains the factors that influence the emissions of different substances from manure management systems. Chapters 3.0, 4.0, 5.0 and 6.0 are profiles of the beef, dairy, swine, and poultry industries. Information is presented on the location, size, design, and mode of operation of typical operations in the industry. Information on the location, number, and size of animal feeding operations are based on analyses of the USDA's National Agricultural Statistics Service (NASS) statistical bulletins and Census of Agriculture for 1997. Chapters 3.0 through 6.0 incorporate analyses and discussions from the development document written by the EPA Office of Water in support of the revised effluent guidelines, and the National Pollutant Discharge Elimination System regulations for concentrated animal feeding operations (USEPA, 2001).

Chapters 3.0 through 6.0 also present a series of model farms for each animal sector. The model farms are hypothetical farms that were designed to represent the significant design and operating parameters that affect air emissions. The elements of model farms are a confinement facility, a manure management system, and a land application site. The design and operation of farms can vary substantially in different regions of the country. While the model farms may not mirror the precise configuration and operation of all AFOs, they are intended to represent the emission characteristics of about 80% of the commercial scale livestock operations in the U.S. Chapter 7.0 discusses emissions from the application of manure to crop land.

Chapter 8.0 presents estimates of air emissions from the model farms and explains the methodology used to estimate emissions. Emissions were estimated for the following substances:

- Ammonia
- Nitrous Oxide
- Methane
- Particulate Matter
- Volatile Organic Compounds
- Hydrogen Sulfide

Information to estimate emissions of hazardous air pollutants, total reduced sulfur compounds, and PM 2.5 generally was not available. Information for PM 10 was found for beef cattle only. Although emissions of speciated VOC and HAP have not been measured, some studies have monitored substances in the air within and outside of confinement facilities. A list of VOC and HAP identified from these studies is presented in Appendix A.

The mechanisms for emitting carbon dioxide are explained in Chapter 2, but carbon dioxide emissions were not estimated in this study. Carbon dioxide emissions from manure are releases of carbon that were sequestered via photosynthesis in the previous one to three years. The carbon emitted is part of a cycling of carbon from the atmosphere to crops to animals and back into the atmosphere over a relatively short period of time. Therefore, emissions from manure were judged not to contribute to a net increase in greenhouse gases in the long term.

Chapter 9.0 summarizes the methods for reducing emissions from AFOs. The chapter summarizes control technology performance and cost data that were available in the literature and identifies the technologies that have been used at commercial scale. Chapter 10.0 is a glossary of terms used in this report.

1.1 References

GAO. 1999. Animal Agriculture: Waste Management Practices, Report to the Honorable Tom Harkin. GAO/RCED-99-205. U.S. General Accounting Office, Washington, D.C., July 1999.

USDA. 1999. Cattle: Final Estimates 1994-1998. Statistical Bulletin 953. U.S. Department of Agriculture (USDA), National Agricultural Statistics Service, Washington, D.C.

USEPA. 2001. Development Document for the Proposed Revisions to the National Pollutant Discharge Elimination System Regulation and the Effluent Guidelines for Concentrated Animal Feeding Operations. EPA-821-R-01-003. U.S. Environmental Protection Agency (USEPA), Office of Water. Washington D.C.

2.0 AIR EMISSIONS FROM FEEDLOT OPERATIONS

Animal feeding operations emit particulate and gaseous substances. The primary mechanism for releases of particulate matter is the entrainment of feeds, dry manure, soil, and other material caused by movement of animals in both indoor and outdoor confinement. The gaseous emissions are the products of the microbial decomposition of manures. For this report, manure is defined as any combination of fecal matter, urine and other materials that are mixed with manure (e.g., bedding material, waste feeds, wash water). Manure can be in a solid, slurry, or liquid state (e.g., surface liquids from storage facilities). Decomposition and the formation of these gaseous compounds begin immediately at excretion and will continue until the manure is incorporated into the soil. Therefore, the substances generated and the subsequent rates of emission depend on a number of variables, including the species of animal being produced, feeding practices, type of confinement facility, type of manure management system, and land application practices.

In addition, animals directly emit some of the gaseous substances listed above as a result of normal metabolic processes such as respiration. However, these emissions were not included in this assessment given that they are uncontrollable. Emissions associated with the use internal combustion engines and boilers also were not included because of the lack of the information to characterize typical use. This section describes the general characteristics of AFOs and the substances emitted (Brock and Madigan, 1998; Alexander, 1977; Tate, 1995).

2.1 General Characteristics of Animal Feeding Operations

An AFO has a confinement facility, a system for manure management (storage and in some cases stabilization), and a land application site. Due to the different methods of confinement and associated manure management, there is no typical AFO. The design and operation of an AFO varies depending on animal type, regional climatic conditions, business practices, and preferences of the operator. However, the combinations of confinement and waste management systems that are most commonly used in each sector of animal agriculture are

identified in this study. A general overview of AFOs is presented below and more detailed, species-specific discussions are presented in Chapters 3.0 through 6.0.

Confinement. A confinement facility may be a totally enclosed structure with full-time mechanical ventilation, a partially enclosed structure with or without mechanical ventilation, an open paved lot, or an open unpaved lot. Method of confinement, which varies among and within the animal species, probably is the most significant factor affecting emissions, because it influences ventilation and method of manure handling and disposal. Whether manure is handled as a solid, liquid, or slurry will influence if the microbial degradation occurs aerobically or anaerobically, and thus the substances generated.

Manure Management System. A manure storage facility may be an integral part of the confinement facility or located adjacent to the confinement facility. When manure is handled as a solid, storage may be within the confinement facility or in stockpiles that may or may not be covered. For liquid or slurry manure handling systems, manure may be stored in an integral tank, such as a storage tank under the floor of a confinement building, or flushed to an external facility such as a pond or an anaerobic lagoon. Emissions from storage tanks and ponds will differ from anaerobic lagoons, which are designed for manure stabilization. Stabilization is the treatment of manure to reduce volatile solids and control odor prior to application to agricultural land. The use of the term “stabilization” rather than “treatment” is intended to avoid the implication that stabilized animal manure can be discharged to surface or ground waters.

Land application. Currently, almost all livestock and poultry manure is applied to cropland or pastures for ultimate disposal. The method of applying manure can affect emissions. Emissions from manure applied to the soil surface and not immediately incorporated will be higher than with immediate incorporation by disking or plowing. Injection, which is possible with manures handled as liquids or slurries, also will reduce emissions. Conversely, the use of irrigation for the land application of liquid manure will increase emissions of gaseous pollutants due to the increased opportunity for volatilization.

Table 2-1 presents an overview of the most common methods of confinement and manure management for large operations. As discussed below, these different combinations affect the relative magnitudes of emissions from each operation.

Table 2-1.

Common Types of Animal Confinement and Manure Management Systems

Species	Animal Confinement	Typical Type of Manure Management System
Broilers	Enclosed building	Integral with confinement[1], or open or covered stockpiles
Turkeys	Enclosed building	Integral with confinement, or open or covered stockpiles
Layers (dry manure)	Enclosed building	Integral with confinement
Layers (flush systems)	Enclosed building	Ponds and anaerobic lagoons
Swine	Enclosed building	Integral with confinement, or tanks, ponds, anaerobic lagoons
Dairy	Enclosed building and open lots	Anaerobic lagoons, tanks and ponds, and uncovered stockpiles
Veal	Enclosed building	Integral with confinement, or tanks, ponds, anaerobic lagoons
Beef	Open lots	Uncovered stockpiles

[1] Manure is stored in the confinement building until it is applied to land.

2.2 Substances Emitted

A number of factors affect the emission of gases and particulate matter from AFOs. Most of the substances emitted are the products of microbial processes that decompose the complex organic constituents in manure. The microbial environment determines which substances are generated and at what rate. This section describes the chemical and biological mechanisms that affect the formation and release of emissions.

Table 2-2 summarizes the substances that can be emitted from different operations within an AFO. Although all AFOs share the same three common elements (confinement facilities,

Table 2-2.

Substances Potentially Emitted from Animal Feeding Operations

Animal Sector	Operations	PM[1]	Hydrogen Sulfide	Ammonia	Nitrous Oxide	Methane	VOC[1]	CO_2[1]
Boilers, Turkeys, Layers (dry)	Confinement	✔		✔				✔
	Manure Storage and Treatment	✔		✔				✔
	Land Disposal	✔		✔	✔			✔
Layers (Liquid)	Confinement	✔	✔	✔		✔	✔	✔
	Manure Storage and Treatment		✔	✔		✔	✔	✔
	Land Disposal		✔	✔	✔		✔	✔
Swine (Flush)	Confinement	✔	✔	✔			✔	✔
	Manure Storage and Treatment		✔	✔		✔	✔	✔
	Land Disposal		✔	✔	✔		✔	✔
Swine (Other[2])	Confinement	✔	✔	✔			✔	✔
	Manure Storage and Treatment		✔	✔		✔	✔	✔
	Land Disposal		✔	✔	✔		✔	✔
Dairy (Flush)	Confinement	✔	✔	✔			✔	✔
	Manure Storage and Treatment		✔	✔		✔	✔	✔
	Land Disposal		✔	✔	✔		✔	✔

Table 2-2.

Substances Potentially Emitted from Animal Feeding Operations (Continued)

Animal Sector	Operations	PM[1]	Hydrogen Sulfide	Ammonia	Nitrous Oxide	Methane	VOC[1]	CO_2[1]
Dairy (Scrape)	Confinement	✔	✔	✔			✔	✔
	Manure Storage and Treatment		✔	✔		✔	✔	✔
	Land Disposal		✔	✔	✔		✔	✔
Dairy (Drylot)	Confinement	✔	✔	✔	✔	✔	✔	✔
	Manure Storage and Treatment	✔	✔	✔	✔	✔	✔	✔
	Land Disposal	✔	✔	✔	✔		✔	✔
Veal	Confinement	✔	✔	✔			✔	✔
	Manure Storage and Treatment		✔	✔		✔	✔	✔
	Land Disposal	✔	✔	✔	✔		✔	✔
Beef	Confinement	✔	✔	✔	✔	✔	✔	✔
	Manure Storage and Treatment	✔	✔	✔	✔	✔	✔	✔
	Land Disposal	✔	✔	✔	✔		✔	✔

[1]PM = particulate matter, as total suspended particulate ,VOC = volatile organic compounds, CO_2 = carbon dioxide.
[2] Other includes pit storage, pull plug pits, and pit recharge systems.

manure management system, and land application site), the differences in production and manure management practices both among and within the different animal sectors result in different microbial environments and therefore different emission potentials. Factors that affect emissions of ammonia, nitrous oxide, methane, carbon dioxide, volatile organic compounds, hydrogen sulfide, particulate matter, and odors are discussed below.

2.2.1 Ammonia

Ammonia is produced as a by-product of the microbial decomposition of the organic nitrogen compounds in manure. Nitrogen occurs as both unabsorbed nutrients in manure and as either urea (mammals) or uric acid (poultry) in urine. Urea and uric acid will hydrolyze rapidly to form ammonia and will be emitted soon after excretion. The formation of ammonia will continue with the microbial breakdown of manure under both aerobic and anaerobic conditions. Because ammonia is highly soluble in water, ammonia will accumulate in manures handled as liquids and semi-solids or slurries, but will volatize rapidly with drying from manures handled as solids. Therefore, the potential for ammonia volatilization exists wherever manure is present, and ammonia will be emitted from confinement buildings, open lots, stockpiles, anaerobic lagoons, and land application from both wet and dry handling systems.

The volatilization of ammonia from any AFO operation can be highly variable depending on total ammonia concentration, temperature, pH, and storage time. Emissions will depend on how much of the ammonia-nitrogen in solution reacts to form ammonia versus ionized ammonium (NH_4^+), which is nonvolatile. In solution, the partitioning of ammonia between the ionized (NH_4^+) and un-ionized (NH_3) species is controlled by pH and temperature. Under acidic conditions (pH values of less than 7.0) ammonium is the predominate species, and ammonia volatilization occurs at a lower rate than at higher pH values. However, some ammonia volatilization occurs even under moderately acidic conditions. Under acidic conditions, ammonia that is volatized will be replenished due to the continual reestablishment of the equilibrium between the concentrations of the ionized and un-ionized species of ammonia in solution following volatilization. As pH increases above 7.0, the concentration of ammonia increases as does the rate of ammonia volatilization. The pH of manures handled as solids can be

in the range of 7.5 to 8.5, which results in fairly rapid ammonia volatilization. Manure handled as liquids or semi-solids tend to have lower pH.

Because of its high solubility in water, the loss of ammonia to the atmosphere will be more rapid when drying of manure occurs. However, there may be little difference in total ammonia emissions between solid and liquid manure handling systems if liquid manure is stored over extended periods of time prior to land application.

2.2.2 Nitrous Oxide

Nitrous oxide also can be produced from the microbial decomposition of organic nitrogen compounds in manure. Unlike ammonia, however, nitrous oxide will be emitted only under certain conditions. Nitrous oxide emissions will occur only if nitrification occurs and is followed by denitrification. Nitrification is the microbial oxidation of ammonia to nitrites and nitrates, and requires an aerobic environment. Denitrification most commonly is a microbially mediated process where nitrites and nitrates are reduced under anaerobic conditions. The principal end product of denitrification is dinitrogen gas (N_2). However, small amounts nitrous oxide as well as nitric oxide also can be generated under certain conditions. Therefore, for nitrous emissions to occur, the manure must first be handled aerobically (i.e., dry) and then anaerobically (i.e., wet).

Nitrous oxide emissions are most likely to occur from unpaved drylots for dairy and beef cattle and at land application sites. These are the sites most likely to have the necessary conditions for both nitrification and denitrification. At these sites, the ammonia nitrogen that is not lost by volatilization will be adsorbed on soil particles and subsequently oxidized to nitrite and nitrate nitrogen. Emissions of nitrous oxide from these sites will depend on two primary factors. The first is drainage. In poorly drained soils, the frequency of saturated conditions, and thus, anaerobic conditions necessary for denitrification, will be higher than for well-drained soils. Conversely, the opportunity for leaching of nitrite and nitrate nitrogen through the soil will be higher in well-drained soils, and the conversion to nitrous oxide will be less. Therefore, poorly drained soils will enhance nitrous oxide emissions. The second factor is plant uptake of ammonia and nitrate nitrogen. Manure that is applied to cropland outside of the growing season

will have more available nitrogen for nitrous oxide emissions as will manure that is applied at higher than agronomic rates.

At most operation, the manure application site will be the principal source of nitrous oxide. However, if manure is applied correctly and at agronomic rates, there should be little if any increase in nitrous oxide emissions relative to emissions from application of inorganic commercial fertilizers.

2.2.3 Methane

Methane is a product of the microbial degradation of organic matter under anaerobic conditions. The microorganisms responsible, known collectively as methanogens, decompose the carbon (cellulose, sugars, proteins, fats) in manure and bedding materials into methane and carbon dioxide. Because anaerobic conditions are necessary, manures handled as a liquid or slurry will emit methane. Manures handled as solids generally have a low enough moisture content to allow adequate diffusion of atmospheric oxygen to preclude anaerobic activity or permit the subsequent oxidation of any methane generated.

Methane is insoluble in water. Thus, methane volatilizes from solution as rapidly as it is generated. Concurrent with the generation of methane is the microbially mediated production of carbon dioxide, which is only sparingly soluble in water. Therefore, methane emissions are accompanied by carbon dioxide emissions. The mixture of these two gases is commonly referred to as biogas. The relative fractions of methane and carbon dioxide in biogas vary depending on the population of methanogens present. Under conditions favorable for the growth of methanogens, biogas normally will be between 60 percent and 70 percent methane and 30 percent to 40 percent carbon dioxide. If, however, the growth of methanogens is inhibited, the methane fraction of biogas can be less than 30 percent.

The principal factors affecting methane emissions are the amount of manure produced and the portion of the manure that decomposes anaerobically. The portion of the manure that decomposes anaerobically depends on the biodegradability of the organic fraction and how the

manure is managed. When manure is stored or handled as a liquid (e.g., anaerobic lagoons, ponds, tanks, or pits), it will decompose anaerobically and produce a significant quantity of methane. Anaerobic lagoons are designed to balance methanogenic microbial activity with organic loading and, therefore, will produce more methane than ponds or tanks. The organic content of manure is measured as volatile solids. When manure is handled as a solid (e.g., in open feedlots or stockpiles), it tends to decompose aerobically and little or no methane is produced. Likewise, manure application sites are not likely sources of methane, because the necessary anaerobic conditions generally do not exist except when soils become saturated. In addition, because methane is insoluble in water, any methane generated during liquid storage or stabilization treatment will be released immediately and will not be present when manure is applied to cropland.

2.2.4 Carbon Dioxide

Carbon dioxide is a product of the microbial degradation of organic matter under both aerobic and anaerobic conditions. Under aerobic conditions, carbon dioxide and water are the end-products, with essentially all of the carbon emitted as carbon dioxide. Under anaerobic conditions, carbon dioxide is one of the products of the microbial decomposition of organic matter to methane. Under these conditions, carbon dioxide is formed as a by-product of the decomposition reactions involving complex organic compounds that contain oxygen. Thus, carbon dioxide will be emitted under both aerobic and anaerobic conditions and will occur wherever manure is present. Land application sites will emit carbon dioxide from the decomposition of manurial organic matter by soil microorganisms.

Although AFOs emit carbon dioxide, the emissions do not contribute to a net long-term increase in atmospheric carbon dioxide concentrations. The carbon dioxide from animal manures is a release of carbon sequestered by photosynthesis during the past one to three years at most. Thus, the carbon dioxide emitted is part of a cycling of carbon from the atmosphere to crops to animals and back into the atmosphere over a relatively short time period. For this reason, AFOs were judged not to contribute to a buildup of greenhouse gases, and emissions of carbon dioxide were not estimated in the study.

2.2.5 Volatile Organic Compounds

Volatile organic compounds are formed as intermediate metabolites in the degradation of organic matter in manure. Under aerobic conditions, any VOC formed are rapidly oxidized to carbon dioxide and water. Under anaerobic conditions, complex organic compounds are degraded microbially to volatile organic acids and other volatile organic compounds, which in turn are converted to methane and carbon dioxide by methanogenic bacteria. When the activity of the methanogenic bacteria is not inhibited, virtually all of the VOC are metabolized to simpler compounds, and the potential for VOC emissions is nominal. However, the inhibition of methane formation results in a buildup of VOC in the manure and ultimate volatilization to the air. Inhibition of methane formation typically is caused by low temperatures or excessive loading rates of volatile solids in a liquid storage facility. Both of these conditions create an imbalance between populations of the microorganisms responsible for the formation of VOC and methanogenic bacteria. Therefore, VOC emissions will be minimal from properly designed and operated stabilization processes (such as anaerobic lagoons) and the associated manure application site. In contrast, VOC emissions will be higher from storage tanks, ponds, overloaded anaerobic lagoons, and associated land application sites. The specific VOC emitted will vary depending on the solubility of individual compounds and other factors (including temperature) that affect solubility.

2.2.6 Hydrogen Sulfide and Other Reduced Sulfur Compounds

Hydrogen sulfide and other reduced sulfur compounds are produced as manure decomposes anaerobically. There are two primary sources of sulfur in animal manures. One is the sulfur amino acids contained in the feed. The other is inorganic sulfur compounds, such as copper sulfate and zinc sulfate, which are used as feed additives to supply trace minerals and serve as growth stimulants. Although sulfates are used as trace mineral carriers in all sectors of animal agriculture, their use is more extensive in the poultry and swine industries. A possible third source of sulfur in some locations is trace minerals in drinking water.

Hydrogen sulfide is the predominant reduced sulfur compound emitted from AFOs. Other compounds that are emitted are methyl mercaptan, dimethyl sulfide, dimethyl disulfide, and carbonyl sulfide. Small quantities of other reduced sulfur compounds are likely to be emitted as well.

Under anaerobic conditions, any excreted sulfur that is not in the form of hydrogen sulfide will be reduced microbially to hydrogen sulfide. Therefore, manures managed as liquids or slurries are potential sources of hydrogen sulfide emissions. The magnitude of hydrogen sulfide emissions is a function of liquid phase concentration, temperature, and pH. Temperature and pH affect the solubility of hydrogen sulfide in water. The solubility of hydrogen sulfide in water increases at pH values above 7. Therefore, as pH shifts from alkaline to acidic (pH<7), the potential for hydrogen sulfide emissions increases (Snoeyink, 1980). Under anaerobic conditions, livestock and poultry manures will be acidic, with pH values ranging from 5.5 to 6.5.

Under aerobic conditions, any reduced sulfur compounds in manure will be oxidized microbially to nonvolatile sulfate, and emissions of hydrogen sulfide will be minimal. Therefore, emissions from confinement facilities with dry manure handling systems and dry manure stockpiles should be negligible, if there is adequate exposure to atmospheric oxygen to maintain aerobic conditions. Any hydrogen sulfide that is generated in dry manure generally will be oxidized as diffusion through aerobic areas occurs.

In summary, manure storage tanks, ponds, anaerobic lagoons, and land application sites are primary sources of hydrogen sulfide emissions whenever sulfur is present in manure. Confinement facilities with manure flushing systems that use supernatant from anaerobic lagoons also are sources of hydrogen sulfide emissions.

2.2.7 Particulate Matter

Sources of particulate matter emissions include feed, bedding materials, dry manure, unpaved soil surfaces, animal dander, and poultry feathers. Therefore, confinement facilities, dry manure storage sites, and land application sites are potential PM emission sources. The relative

significance of each source depends on three interrelated factors: 1) the type of animal being raised, 2) the design of the confinement facility being utilized, and 3) the method of manure handling.

The National Ambient Air Quality Standards currently regulate concentrations of particulate matter with a mass median diameter of 10 micrometers or less (PM 10). Studies have shown that particles in the smaller size fractions contribute most to human health effects. The current PM 10 standard may be replaced by a standard for PM 2.5. A PM 2.5 standard was published in 1997, but has not been implemented pending the results of ongoing litigation.

The particle size distribution of particulate matter emitted from AFOs has not been well characterized. Virtually all of the emission studies to date have measured total suspended particulate or did not report the test method used. Particle size distribution data was found only for beef feedlots. In one study, ambient measurements of PM 10 and PM 2.5 (using five hour sample collection periods) were taken downwind (15 to 61 meters) of three cattle feedlots in the Southern Great Plains (Sweeten, et al., 1998). In this study, PM 10 was measured as 20 percent to 40 percent of TSP (depending on the measurement method used), and PM 2.5 was 5 percent of TSP. No studies were found of particle size distribution from confinement buildings. Based on the emission mechanisms at AFOs, one would expect to find that: (1) PM from AFOs would have varying particle size distributions depending on the animal sector, method of confinement, and type of building ventilation used, and (2) the PM emitted would include PM 10 and a lesser fraction of PM 2.5. In addition to direct emission, PM 2.5 can be secondarily formed in the atmosphere from emissions of ammonia. If sulfur oxides or nitrogen oxides are present in the air, ammonia will be converted to ammonium sulfate or ammonium nitrate, respectively. No information is available at this time to quantify the emissions of secondarily formed PM 2.5. For this report, PM means total suspended particulate, except where noted specifically as PM 10.

All confinement facilities are sources of particulate matter emissions. However, the composition of these emissions will vary. The only constant constituent is animal dander and feather particles from poultry. For poultry and swine, feed particles will constitute a significant fraction of particulate matter emissions because the dry, ground feed grains and other ingredients

used to formulate these feeds are inherently dusty. Pelleting of feeds reduces, but does not eliminate, dust and PM emissions. Dried forages also generate particulate matter, but most likely to a lesser degree. Silages, which have relatively high moisture contents tend to generate less PM than for other types of feed. Because veal calves are fed a liquid diet, feed does not contribute to particle emissions from veal operations.

The mass of particulate matter emitted from totally or partially enclosed confinement facilities, as well as the particle size distribution, depend on type of ventilation and ventilation rate. Particulate matter emissions from naturally ventilated buildings will be lower than those from mechanically ventilated buildings. Mechanically ventilated buildings will emit more PM at higher ventilation rates. Therefore, confinement facilities located in warmer climates will tend to emit more PM because of the higher ventilation rates needed for cooling.

While confinement facilities for dairy and beef cattle typically are all naturally ventilated, facilities for poultry, swine, and veal are mechanically ventilated for all or at least part of the year. When mechanical ventilation is used for only part of the year, it is used during the coldest and hottest months with natural ventilation used during the remainder of the year.

Open feedlots and storage facilities for dry manure from broilers, turkeys, laying hens in high rise houses, dairy drylots, and beef cattle drylots also are potential sources of particulate matter emissions. The rate of emission depends on whether or not the manure is covered. Open sites are intermittent sources of particulate matter emissions, because of the variable nature of wind direction and speed and precipitation. Thus, the moisture content of the manure and the resulting emissions will be highly variable. The PM emissions from covered manure storage facilities depend on the degree of exposure to wind.

2.2.8 Odors

Odor generated from an AFO is not the result of a distinct compound, but is caused by the presence of several constituents of manure degradation. The principal compounds responsible for noxious odors are hydrogen sulfide, ammonia, and VOC. The VOC that contribute to odors

are volatile acids (acetic, propionic, formic, butyric, and valeric), indole, phenols, volatile amines, methyl mercaptan, and skatole.

Most the odorous compounds are products of anaerobic digestion of organic compounds. Therefore, the potential for odors is greater at operations with liquid manure management systems. In liquid systems, odors can be produced from storage pits, ponds, and land application. Properly designed and operated anaerobic lagoons should have relatively low odors, but odors can be produced under two conditions: (1) in the spring and fall when sudden temperature changes can upset the microbial balance, or (2) if the lagoon is overloaded with volatile solids. Drylots can produce odors whenever warm, wet conditions produce transient anaerobic conditions. Odors also can be caused by decaying animals, if the carcasses are stored too long prior to disposal.

2.3 Summary of Factors Affecting Emissions

To summarize Section 2.2, emissions from AFOs depend on manure characteristics and how the manure is managed. Manure excreted by each type of animal will have specific characteristics (e.g., nitrogen content, moisture content). The characteristics, however, can be altered depending on how the manure is collected, stored, and land applied. Chapters 3.0 through 6.0 of this report discuss the different types of confinement and manure management systems used for the beef, dairy, swine, and poultry sectors. The potential for generating emissions at any point in the process depends on several factors. The potential for PM emissions depends on whether the manure is handled in a wet or dry state. The potential for gaseous emissions generally depends on several factors: (1) the presence of an aerobic or anaerobic microbial environment, (2) the precursors present in the manure (e.g., sulfur), (3) pH of the manure, and (4) time and temperature in storage, which primarily affects mass emitted. The effect of each these factors on emission is summarized in Table 2-3 and described below.

Wet/dry manure management systems. To form hydrogen sulfide (and other reduced sulfur compounds), methane, and VOC requires an anaerobic environment. Therefore, the potential to emit these substances is greatest when manure is handled as a liquid or slurry. Ammonia will be generated in both wet and dry manure. Nitrous oxide will be

Table 2-3.

Factors That Increase Emissions

Substance Emitted	Wet Manure Handling	Dry Manure Handling	pH	High Temperature	Manure Residence Time	Precursors
Ammonia			>7.0	✔	✔	Nitrogen
Nitrous Oxide		✔				Nitrogen
Hydrogen Sulfide	✔		<7.0	✔	✔	Sulfur
Methane	✔			✔	✔	Carbon
VOC	✔			✔	✔	Carbon
Particulate Matter[1]		✔				

[1] Total suspended particulate. Fine particles (PM2.5) in the form of ammonium sulfate and ammonium nitrate can be secondarily formed in the atmosphere from ammonia emissions; if sulfur oxides or nitrogen oxides are present in the air.

formed only when manure that is handled in a dry state becomes saturated (thus forming transient anaerobic conditions).

pH. Emissions of ammonia and hydrogen sulfide are influenced by pH. The manure pH affects the partitioning between these compounds and their ionized forms (NH_4^+ and HS^-), which are nonvolatile.

Temperature. Temperature has two effects: (1) Temperature affects gas phase vapor pressure, and therefore, the volatility. For substances that are soluble in water (ammonia, some VOC, hydrogen sulfide and other reduced sulfur compounds), emissions will be greater at higher temperatures. Emission rates of these substances will be greater in warmer climates and in the summer rather than winter. Methane is insoluble in water, and at any temperature will be emitted very quickly after formation. (2) Higher temperature favors the microbial processes that generate methane and other substances.

Time in storage. Long periods of manure residence time in either confinement, storage, or stabilization facilities provide greater opportunities for anaerobic breakdown and volatilization to the air. Also, masses emitted will increase with time.

Precursors. The amount of sulfur ingested by an animal will affect the potential for hydrogen sulfide production in manure. Sulfur can be present in feed additives and, in some cases, from water supplies. The amount of nitrogen in feed (proteins and amino acids) affects ammonia and nitrous oxide emission potential. The amount of carbon affects methane and carbon dioxide potential. Ensuring that the composition of feedstuffs does not exceed the nutritional needs of the animal will reduce emissions.

2.4 References

Alexander, M. 1977. Introduction to Soil Microbiology, 2nd Ed. John Wiley and Sons, New York, New York.

Brock, T.D. and M.T. Madigan. 1988. Biology or Microorganisms, 5th Ed. Prentice Hall, Englewood Cliffs, New Jersey.

Snoeyink, V.L. and D. Jenkins. 1980. Water Chemistry. John Wiley and Sons, New York, New York

Sweeten, J.M., C.B. Parnell, B.W. Shaw, and B.W. Auvermann. 1998. Particle Size Distribution of Cattle Feedlot Dust Emissions. Transactions of the American Society of Agricultural Engineers 41 (5): 477-1481.

Tate, R.L., III. 1995. Soil Microbiology. John Wiley and Sons, New York, New York.

3.0 BEEF CATTLE FEEDING OPERATIONS

This chapter discusses beef cattle feeding, confinement, and manure handling operations. This animal sector includes adult beef cattle (heifers and steers), and calves. Beef cattle may be kept on open pastures or confined to feedlots. This chapter discusses feedlot operations only.

3.1 Size and Location of Industry

In 1997, there were 106,075 beef open feedlots in the U.S., excluding farms where animals graze (USDA, 1999a). These feedlots sold more than 26 million beef cattle in 1997 (USDA, 1999b). Table 3-1 shows the distribution of feedlots by state and estimated capacity. The capacity of a beef feedlot is the maximum number of cattle that can be confined at any one time. The feedlot capacity was derived from annual sales figures (USDA, 1999b) by considering the typical number of turnovers of cattle per year and capacity utilization (ERG, 2000).

Table 3-2 shows beef cattle sales by feedlot size in 1997. While most feedlots are small, the majority of production is from larger farms. For example, 2,075 feedlots with capacity greater than 1,000 head accounted for only 2% of all lots, but produced 80% of the beef sold in the U.S. in 1997. Beef feedlots vary in size from feedlots with a confinement capacity of less than 100 head to those in excess of 32,000 head of cattle.

Beef cattle are located in all 50 of the United States, but most of the capacity is in the central and western states. Table 3-3 presents information on the total number of animals per State in 1997. The table is divided into heifer (female) population and steer (castrated male) population. The five largest producing states are Colorado, Iowa, Kansas, Nebraska, and Texas. These states account for two-thirds of the steer population and almost 85% of the heifer population on feedlots in the U.S.

Table 3-1.

Number of Beef Feedlots by Size in 1997

STATE	CONFINEMENT CAPACITY			
	<500 Head	500-1000 Head	>1000 Head	
ALABAMA	921	1	1	
ALASKA	19	0	0	
ARIZONA	153	2	12	
ARKANSAS	1039	2	2	
CALIFORNIA	901	9	41	
COLORADO	1400	44	145	
CONNECTICUT	151	0	0	
DELAWARE	66	1	1	
FLORIDA	549	0	0	
GEORGIA	696	1	2	
HAWAII	34	1	3	
IDAHO	899	8	40	
ILLINOIS	7184	54	51	
INDIANA	6001	19	13	
IOWA	12040	233	263	
KANSAS	2630	93	298	
KENTUCKY	1910	6	4	
LOUISIANA	311	0	0	
MAINE	243	0	0	
MARYLAND	754	1	0	
MASSACHUSETTS	111	0	0	
MICHIGAN	4455	21	30	
MINNESOTA	8345	58	56	
MISSISSIPPI	560	0	0	
MISSOURI	4392	16	23	
MONTANA	655	14	16	
NEBRASKA	4855	204	602	
NEVADA	83	4	4	
NEW HAMPSHIRE	79	0	0	
NEW JERSEY	335	0	0	
NEW MEXICO	321	3	16	
NEW YORK	1424	2	3	
NORTH CAROLINA	903	2	3	
NORTH DAKOTA	1086	9	8	
OHIO	7241	19	11	
OKLAHOMA	1850	11	35	
OREGON	1864	5	11	
PENNSYLVANIA	5299	16	10	
RHODE ISLAND	26	0	0	
SOUTH CAROLINA	348	3	1	
SOUTH DAKOTA	2711	65	88	
TENNESSEE	1965	1	1	
TEXAS	3574	31	218	
UTAH	797	5	11	
VERMONT	158	1	1	
VIRGINIA	1363	4	3	
WASHINGTON	1170	4	22	
WEST VIRGINIA	804	0	0	
WISCONSIN	7980	19	10	
WYOMING	345	8	16	
UNITED STATES	**103000**	**1000**	**2075**	**106,075**

ERG, 2000

Table 3-2.

Beef Cattle Sold in 1997

Feedlot Size	Number of Facilities	Cattle Sold	Average Cattle Sold
< 300 Head	102,000	2,362,000	23
300-500 Head	1,000	600,000	600
500-1,000 Head	1,000	1,088,000	1,088
> 1,000 Head	2,075	22,789,000	10,983
All Operations	106,075	26,839,000	253

[a] Based on estimated maximum confinement capacity.
USEPA, 2001

Table 3-3.

Beef Cow Inventory by State in 1997

STATE	INVENTORY (1,000 Head)	
	Heifers	Steer
ALABAMA	2	3
ALASKA	0	0
ARIZONA	23	190
ARKANSAS	6	11
CALIFORNIA	68	275
COLORADO	410	622
CONNECTICUT	-	0
DELAWARE	0	1
FLORIDA	3	5
GEORGIA	2	2
HAWAII	1	1
IDAHO	86	161
ILLINOIS	102	140
INDIANA	59	123
IOWA	360	554
KANSAS	751	1,277
KENTUCKY	6	12
LOUISIANA	1	2
MAINE	0	1
MARYLAND	4	6
MASSACHUSETTS	0	0
MICHIGAN	31	152
MINNESOTA	71	190
MISSISSIPPI	1	2
MISSOURI	30	57
MONTANA	32	45
NEBRASKA	825	1,203
NEVADA	9	14
NEW HAMPSHIRE	0	0
NEW JERSEY	1	5

Table 3-3.

Beef Cow Inventory State in 1997 (Continued)

STATE	INVENTORY (1,000 Head)		
	Heifers	Steer	
NEW MEXICO	46	79	
NEW YORK	14	13	
NORTH CAROLINA	2	7	
NORTH DAKOTA	40	52	
OHIO	46	136	
OKLAHOMA	109	256	
OREGON	32	41	
PENNSYLVANIA	13	56	
RHODE ISLAND	0	0	
SOUTH CAROLINA	2	3	
SOUTH DAKOTA	120	172	
TENNESSEE	7	11	
TEXAS	939	1,463	
UTAH	16	30	
VERMONT	0	1	
VIRGINIA	7	20	
WASHINGTON	54	95	
WEST VIRGINIA	3	4	
WISCONSIN	26	111	
WYOMING	33	40	
UNITED STATES	**4,396**	**7,644**	**12,040**

USDA,1999a

3.2 Beef Production Cycles

There are three different types of operations in the beef industry with each corresponding to a different phase of the animal growth cycle. These operations are referred to as cow-calf operations, backgrounding, and finishing. These operations are typically conducted at separate locations that specialize in each phase of production.

3.2.1 Cow-Calf Operations

Cow-calf type of operations are a source of the heifers and steers (castrated males) fed for slaughter. Cow-calf operations maintain a herd of heifers, brood cows, and breeding bulls typically on pasture or range land to produce a yearly crop of calves for eventual sale as feeder cattle. In colder climates and during drought conditions, cow-calf operations using pasture or rangeland will provide supplemental feed, primarily hay but with some grain and other

feedstuffs. Confinement on drylots also is an option used on some cow-calf operations when grazing will not satisfy nutritional needs. Although pasture or range based cow-calf operations are most common, operations exclusively using drylots may be encountered. In colder climates, cow-calf operations may have calving barns to reduce calf mortality.

3.2.2 Backgrounding Operations

Backgrounding or stocker operations prepare weaned calves for finishing on high energy rations to promote rapid weight gain. Backgrounding operations may be pasture or dry-lot based or some combination thereof. Relatively inexpensive forages, crop residues, and pasture are used as feeds with the objective of building muscle and bone mass without excessive fat at a relatively low cost. The length of the backgrounding process may be as short as 30 to 60 days or as long as six months (Rasby, et al., 1996). The duration of the backgrounding process and the size of the animal moving onto the finishing stage of the beef production cycle depend on several factors. High grain prices favor longer periods of backgrounding by reducing feed costs for finishing or fattening while heavier weaning weights shorten the finishing process. Backgrounded beef cattle may be sold to a finishing operation as "feeder cattle" usually at auction or raised under contract with a finishing operation. It is common for large finishing operations to have cattle backgrounded under contract to insure a steady supply of animals. In some instances cow-calf and backgrounding operations will be combined.

3.2.3 Finishing or Feedlot Operations

The final phase of the beef cattle production cycle is called the finishing or feedlot phase. Beef cattle in the finishing phase are known as “cattle on feed.” Finished cattle are “fed cattle.” Usually, the finishing phase begins with six-month old animals weighing about 400 pounds. In between 150 and 180 days, these animals will reach the slaughter weights of 1,050 to 1,150 pounds for heifers and 1,150 and 1,250 pounds for steers and a new finishing cycle begins. Some feedlot operators will start with younger animals weighing about 275 pounds or older or heavier animals initially. This either extends the finishing cycle to about 270 days or shortens it to about 100 days. Accordingly, typical feedlots can have from 1.5 to 3.5 turnovers of cattle herds. On

average, most beef feedlots operate at between 80% and 85% of capacity over the course of a year (NCBA, 1999).

3.3 Beef Confinement Practices

As noted earlier, the cow-calf and backgrounding phases of the beef production cycle are primarily pasture or rangeland based. The underlying rationale for this method of raising cattle is avoidance of the cost of harvesting, transporting, and storing roughages, which is necessary with confinement feeding. Therefore, confinement feeding during these phases of the beef production cycle generally is limited to time periods when grazing can not satisfy nutritional needs.

In the final or finishing phase of the beef cattle production cycle, heifers and steers most typically are fed to slaughter weight in open confinement facilities known as feedlots or feed yards. The majority of beef feedlots are open feedlots, which may be partially paved. Generally, paving, if present, is limited to a concrete apron typically located along feed bunks and around waterers, because these are areas of heaviest animal traffic and manure accumulation (Bodman, et al., 1987).

Cattle are segregated in pens designed for efficient movement of cattle, optimum drainage, and easy feed truck access. A typical pen holds 150-300 head of cattle but the size can vary substantially. Required pen space may range from 75 to 400 square feet of pen space per head, depending on the climate. A dry climate requires 75 square feet of pen space per head whereas a wet climate may require up to 400 square feet (Thompson, O'Mary, 1983). Space needs vary with the amount of paved space, soil type, drainage, annual rainfall, and freezing and thawing cycles. These types of operations may use mounds to improve drainage and provide areas that dry quickly, since dry resting areas improve cattle comfort, health, and feed utilization. Typically, pens are constructed to drain after precipitation events as quickly as possible with the resulting runoff conveyed to storage ponds that may be preceded by settling basins to reduce solids entering the ponds. In open feedlots, protection from weather is often limited to a windbreaker near a fence in the winter and/or sunshade in the summer.

In cold climates and high rainfall areas, small beef cattle finishing operations may use totally enclosed confinement to reduce the negative impact of cold weather on feed conversion efficiency and rate of weight gain. However, totally enclosed confinement facilities generally are not economically competitive with open feedlots and are relatively few in number.

3.4 Feeding Practices

Feeding practices in the different phases of the beef production cycle differ reflecting differences in nutritional requirements for maintenance and growth. As noted earlier, cow-calf and backgrounding operations typically depend on grazing, possibly with the feeding of a mineral supplement, to satisfy nutritional needs. When there is feeding in confinement facilities, harvested roughages, hays and silages, are the principal, if not only feedstuffs.

During the finishing phase of the beef production cycle, there is a shift from a roughage-based to a grain-based, high-energy ration to produce a rapid of weight gain and desirable carcass characteristics. Because beef cattle are ruminant animals, some small level of roughage intake must be maintained to maintain rumen activity. Generally, mixed rations, which are combinations of roughages and concentrates, are fed. However, roughages and concentrates may be fed separately, a practice more common with smaller operations. Roughages have high fiber contents and are relatively dilute sources of energy and protein, whereas concentrates are low-fiber, high-energy feeds, which also may have a high protein content. Feeding practices for beef cattle generally are based on nutrient requirements established by the National Research Council (NRC, 1996). Handling moist feeds have a limited potential for particulate emissions, while handling dry feeds, such as grain, may be a source of particulate emissions.

While cow-calf and backgrounding operations generally depend on grazing to satisfy nutritional needs, feed must be provided to beef cattle being finished in feedlots. Typically, feed is delivered to feed bunks two to three times per day with the objective of always having feed available for consumption without the excessive accumulation of uneaten feed to minimize spoilage. Cattle are typically fed using feed bunks located along feed alleys that separate individual pens. Feed is delivered either by self-unloading trucks, tractor-drawn wagons

(fence-line feeding), or mechanical feed bunks. Usually, mechanical feed bunks are located between pens allowing animal access from both sides of the feed bunk. In small feedlots where roughages and concentrates are fed separately, animals may have access to haystacks, self-feeding horizontal silos, or large tubular plastic bags containing roughage. Concentrates are fed separately in portable feed bunks.

Open-front barns and lots with mechanical or fence-line feed bunks are common for feedlots up to 1,000 head, especially in areas with severe winter weather and high rainfall. Portable silage and grain bunks are useful for up to 200 head (Bodman, et al., 1987).

The metabolic requirement for maintenance of an animal typically increases during cold weather, reducing weight gain and increasing feed consumption to provide more energy, thereby increasing the amount of manure that is generated. Feed consumption typically declines under abnormally high temperatures, therefore reducing weight gain. Investigations in California have shown that the effect of climate-related stress could increase feed requirements as much as 33%, resulting in increased manure generation (Thompson, O'Mary, 1983).

3.5 Manure Management Practices

Beef cattle manure produced in confinement facilities generally is handled as a solid. Run-off from feedlots can be either liquid or slurry. Manure produced in totally enclosed confinement facilities may be handled as a slurry or a liquid if water is used to move manure. Slurry manure has enough water added to form a mixture capable of being handled by solids handling pumps. Liquid manure usually has less than 8% solids resulting from significant dilution. It is easier to automate slurry and liquid manure handling, but the large volume of water necessary for dilution increases storage and disposal requirements and equipment costs (USDA, 1992).

Solid manure is scraped or moved by tractors to stockpiles. Run-off from open lots is pumped to solids separation activities to separate the solid and liquid fraction. The liquid

fraction is then sent to storage ponds. Both the solid and liquid fractions can be disposed of on land.

3.5.1 Manure Collection

The following methods are used in feedlots to collect accumulated manure for disposal:

Open lots. Manure most commonly is collected for removal from open lots by scraping using tractor-mounted blades. Very large feedlots commonly use earth-moving equipment such as pan scrapers and front-end loaders. Manure accumulates in areas around feed bunks and water troughs most rapidly, and these areas may be scraped frequently during the finishing cycle. This manure may be removed from the pen immediately or may be moved to another area of the pen and allowed to dry. Usually the entire pen is completely scraped and the manure removed at the end of finishing after the animals are shipped for slaughter (Sweeten, 2000).

Totally enclosed confinement. Beef cattle manure accumulations in totally enclosed confinement facilities also are typically collected and removed by scraping using tractor-mounted blade. However, mechanized scraping systems, like those used in the dairy industry, also can be used but require a concrete floor. With a concrete floor, use of a flush system for manure collection and removal also is possible. A flush system uses a large volume of water discharged rapidly one or more times per day to transport accumulated manure to an earthen anaerobic lagoon for stabilization and storage. Typically, 100 gallons of flush water is used per head twice a day. Frequency of flushing as well as slope and length of the area being flushed determines the amount of flush water required (Loudon, et al., 1985). The lagoon usually is the source of the water used for flushing. Due to freezing problems, use of flushing in totally enclosed finishing facilities is not common since totally enclosed confinement operations normally are found only in cold climates.

Slatted floors over deep pits or shallow, flushed alleys also have been used in totally enclosed beef cattle finishing facilities. Most slats are reinforced concrete, but can also be wood, plastic, or aluminum. They are designed to support the weight of the slat plus a live load, which includes animals, humans, and mobile equipment. Manure is forced between the slats as the animals walk around the facility, which keeps the floor surface relatively free of accumulated manure. With slatted floors over deep pits, pits typically are emptied at the end of a finishing cycle. Some water may be added to enable pumping or there may be access to allow the use of a

front-end loader. Due to the cost of slatted floor systems, their use in beef cattle production is rare.

Factors that affect emissions from beef feedlots include the number of animals on the lot and the moisture of the manure. The number of animals influences the amount of manure generated and the amount of dust generated. In well-drained feedlots, emissions of nitrogen oxides are likely to occur because decomposition of manure is aerobic. In wet feedlots, decomposition is anaerobic and emissions of ammonia, hydrogen sulfide, and other odor causing compounds are likely. Additionally, the feedlot is a potential air release point of particulate matter/dust from feed and movement of cattle.

3.5.2 Manure Storage, Stabilization, Disposal, and Separation

Manure collected from the feedlot may be stored, stabilized, directly applied to land on-site, or transported off-site for disposal.

Storage

If beef cattle manure is handled as a solid, it is stored by stacking within an area of the feedlot or other open confinement facility or an adjacent dedicated storage site. Stacking sites typically will be uncovered and collection of contaminated run-off is necessary. Manure handled as a slurry or liquid will be stored in either earthen storage ponds or anaerobic lagoons. Above ground tanks are another option for storage of these types of manures but are not commonly used. Storage tanks and ponds are designed to hold the volume of manure and process wastewater generated during the storage period, the depth of normal precipitation minus evaporation, and the depth of the 25-year, 24-hour storm event with a minimum of one foot of freeboard remaining at all times. Emissions from storage tanks and ponds include ammonia, hydrogen sulfide, VOC, and methane. The magnitudes of emissions depends primarily on the length of the storage period and temperature of the manure. Low temperatures inhibit the microbial activity responsible for the creation of these compounds while long storage periods increase the opportunity for emissions. A detailed discussion of storage tanks and ponds can be found in Section 5.3.

Stabilization

Stabilization is the treatment of manure to reduce odor and volatile solids prior to land application. Because manure is allowed to remain on feedlots for extended time periods, a significant degree of decomposition due to microbial activity occurs. When stacked for storage, a significant increase in temperature may occur depending on moisture content due to microbial heat production. Manure accumulations on feedlots and stored in stacks can be sources of ammonia, hydrogen sulfide, VOC, and methane if moisture content is sufficient to promote microbial decomposition. Dry manure is an emission source of nitrous oxide and particulate matter/dust emissions. When beef cattle manure is stored as a slurry or liquid, some decomposition or stabilization also occurs. Anaerobic lagoons, when designed and operated properly, result in a higher degree of stabilization than storage ponds or tanks, which have the single objective of providing storage. In storage ponds and tanks, intermediates in the decomposition process usually accumulate and are sources of odors. Storage tanks and ponds and lagoons can be sources of ammonia, hydrogen sulfide, VOC, and methane emissions. A detailed discussion of anaerobic lagoons is found in Section 5.4.

Land Application

The majority (approximately 83%) of beef feedlots dispose of their manure from storage and stabilization through land application (USDA, 2000). Box-type manure spreaders are used to apply solid manure while flail type spreaders or tank wagons with or without injectors are used with slurry type manure. Tank wagons or irrigation systems are used for liquid manure disposal. Beef cattle manure not disposed of by land application may be composted for sale for horticultural and landscaping purposes. Land application is discussed in detail in Chapter 7.0.

Separation

In the beef cattle industry, liquid-solids separation essentially is limited to the removal of solids from run-off collected from feedlots and other open confinement areas using settling basins. However, stationary and mechanical screens also may be used. The objective of these

devices is to reduce the organic loading to run-off storage ponds. Although separation also can be used with beef cattle manure handled as a liquid, this form of manure handling is not common in beef cattle industry, as noted earlier. Emissions from settling basins depend on the hydraulic retention time (HRT) of the run-off in the basin and frequency of removal of settled solids. If settled solids are allowed to accumulate, ammonia, hydrogen sulfide, VOC, and methane emissions may be significant. Generally, the time spent in separation activities is short (i.e., less than one day).

3.6 Beef Model Farms

This section explains a set of model farms that were developed to characterize the beef industry. Model farms are hypothetical farms that are intended to represent the range of design and operating practices that influence emissions from each animal sector. These models can be used to develop emission estimates, control costs, and regulatory assessments.

The model farms include four components: confinement areas, solids separation activities, storage and stabilization practices, and land application. Land application includes emissions from the manure application activity and from the soil after manure application. For the model farms, emissions from the application of manure are differentiated from emissions from the manure application site (i.e., cropland or other agricultural land) because emission mechanisms are different. Emissions from the application activity occur on a short time period, and depend on the methods by which manure is applied. Emissions from the application site occur as substances volatilize from the soil over a period of time as a result of a variety of subsequent microbial and chemical transformations.

Cow-calf and background operations do not typically confine animals and, as such, models were not developed to represent them. Those that do confine cattle would be represented by the model farms for finishing operations.

Two model farms were developed to characterize typical beef cattle finishing operations (B1A and B1B). The components of the model farms include an open confinement area

(feedlot), solids separation for collected surface run-off, manure storage facilities (storage ponds for surface run-off and stockpiles for solids), and land application. In both models, land application includes solid and liquid manure application activities (e.g., irrigation, solid manure spreader) and the manure application site (e.g., emission released from agricultural soils after the manure is applied). The beef models differ only by presence or absence of solids separation.

Beef Model Farms

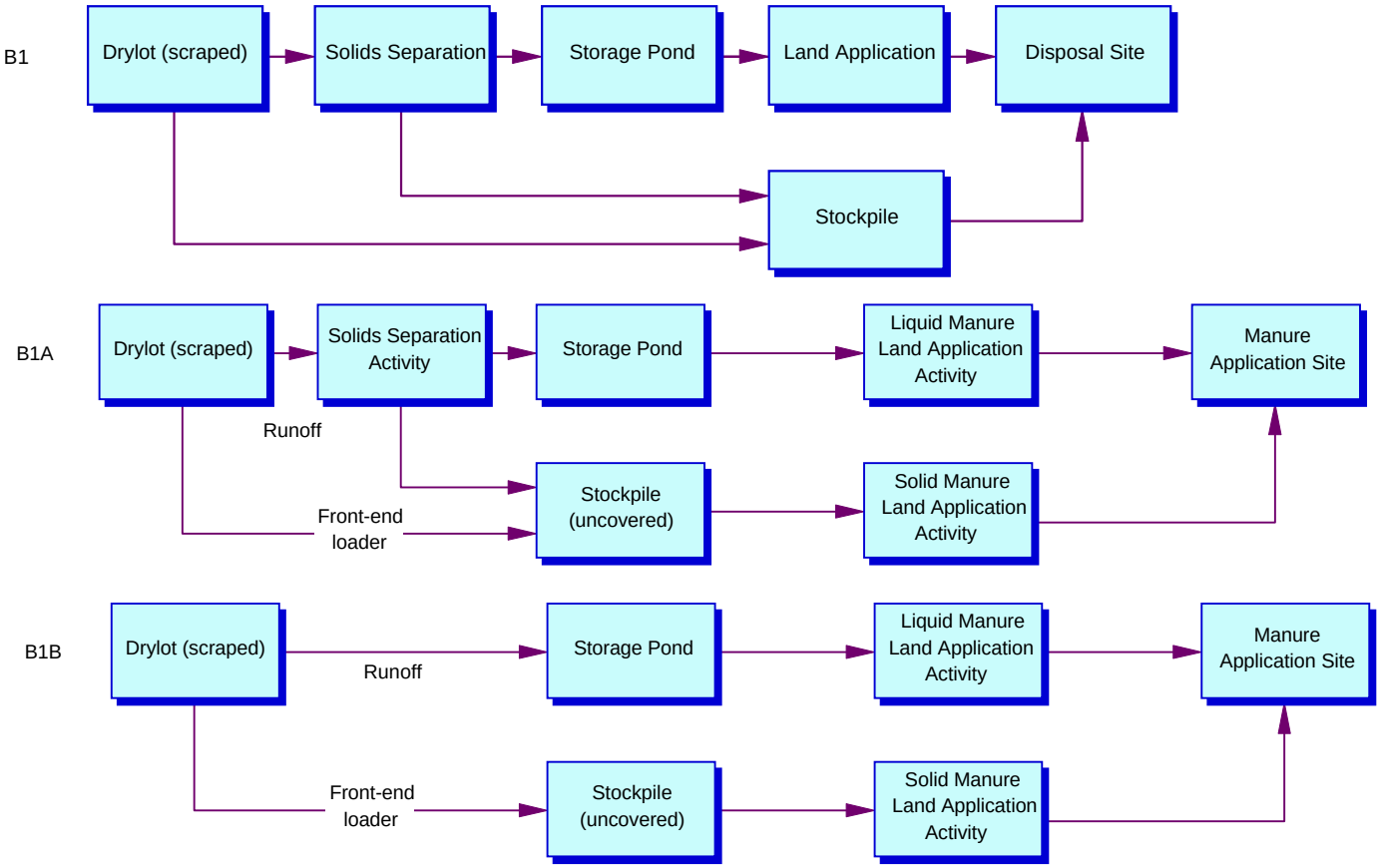

3.6.1 Confinement

Feedlots are the only confinement operation considered for the model farms because most, if not at all, beef operations use feedlots. Industry manure collection information indicates that most of the manure is typically scraped by a tractor scraper or front-end loader and stockpiled for later disposal by land application. Run-off from the feedlot is sent to solids separation processes or directly to storage ponds.

3.6.2 Solids Separation

Run-off from the feedlot is either sent to solids separation activities to remove solids or directly to storage ponds. The separated solids are sent to a stockpile and the liquid fraction is sent to a storage pond. Two common types of solids separation were considered in developing the model farms: mechanical screens or gravity settling basins. After reviewing the emission mechanisms from each type of separation practice, it was determined that emissions would not vary substantially between mechanical screens and settling basins. Additionally, due to the short duration, manure emissions would be relatively small, thus differences between the separation processes would be insignificant. Therefore, the model farms only represent the option of either having solids separation (B1A) or not (B1B). The models are based on a short manure retention time in solids separation, and therefore negligible emissions from this process. The emission differences between the models are from the manure storage following separation.

3.6.3 Storage and Stabilization

The model beef farms contain storage activities for solid and liquid manure. Two types of solid manure storage activities were considered in developing the model farms. Solid manure could be: (1) stored in an uncovered stockpile, or (2) not stored at all and sent directly from the feedlot to be land applied. Review of industry practices indicated that solid manure would generally not be sent directly from the feedlot to be land applied, but would have some intermediate storage. Therefore, all the model farms included an uncovered stockpile. The liquid fraction from the run-off or the solids separation process (model B1A only) is sent to a storage pond.

3.6.4 Land Application

Land application is discussed in detail in Chapter 7.0. Land application includes the manure application activity and the manure application site (i.e., cropland or other agricultural land). Solid manure is typically land applied to the manure application site using a solid manure spreader. Three types of land application activities were considered for liquid manure in

developing the model farms, land application by: (1) liquid surface spreader, (2) liquid injection manure spreader, or (3) irrigation. Review of industry practices indicated that injection is rarely used. The emissions from irrigation and liquid surface spreading were judged to be similar, due to the short duration of time for each activity and similar emission mechanisms. Therefore, the model farms only refer to liquid manure land application rather than a specific type.

3.7 References

Bodman, G.R., D.W. Johnson, D.G. Jedele, V.M. Meyer, J.P. Murphy, and H.L. Person. 1987. Beef Housing and Equipment Handbook, 4th ed., Midwest Plan Service. Ames, Iowa.

ERG. 2000. Facility Counts for Beef, Dairy, Veal, and Heifer Operations. Memorandum from Deb Bartram, Eastern Research Group, Inc. (ERG) to the Feedlots Rulemaking Record. U.S. Environmental Protection Agency (USEPA) Water Docket, W-00-27.

Loudon, T.L., D.D. Jones, J.B. Petersen, L.F. Backer, M.F. Brugger, J.C. Converse, C.D. Fulhage, J.A. Lindley, S.W. Nelvin, H.L. Person, D.D. Schulte, and R. White. 1985. Livestock Waste Facilities Handbook, 2nd ed., Midwest Plan Service. Ames, Iowa.

NCBA. 1999. Comments on the Draft Industry Profile. National Cattlemen's Beef Association (NCBA).

NRC. 1996. Nutrient Requirements of Beef Cattle. National Research Council (NRC). Subcommittee on Beef Cattle Nutrition, Committee on Animal Nutrition, Board on Agriculture, 7th rev.ed.

Rasby, R., I. Rush, and R. Stock. 1996. Wintering and Backgrounding Beef Calves. NebGuide. Cooperative Extension, Institute of Agriculture and Natural Resources, University of Nebraska-Lincoln.

Sweeten, J. 2000. Manure Management for Cattle Feedlots. Great Plains Beef Cattle Handbook. Cooperative Extension Service - Great Plains States.

Thompson, G.B., Ph.D. and C.C. O'Mary, Ph.D. 1983. The Feedlot, 3rd ed., Lea & Febiger, Philadelphia.

USDA. 1992. Agricultural Waste Management Field Handbook, National Engineering Handbook, Part 651. U.S. Department of Agriculture (USDA), Natural Resources Conservation Service (NRCS), Washington, D.C.

USDA. 1999a. Cattle: Final Estimates 1994-1998. Statistical Bulletin 953. U.S. Department of Agriculture (USDA), National Agricultural Statistics Service (NASS), Washington, D.C.

USDA. 1999b. 1997 Census of Agriculture. U.S. Department of Agriculture (USDA), National Agricultural Statistics Service (NASS). Washington, D.C.

USDA. 2000. National Animal Health Monitoring System, Part I: Baseline Reference of Feedlot Management Practices. U.S. Department of Agriculture (USDA), Animal and Plant Health Inspection Service (APHIS). Fort Collins, Colorado.

USEPA. 2001. Development Document for the Proposed Revisions to the National Pollutant Discharge Elimination System Regulation and the Effluent Guidelines for Concentrated Animal Feeding Operations. EPA-821-R-01-003. U.S. Environmental Protection Agency, Office of Water, Washington, D.C.

4.0 DAIRY OPERATIONS

For this study, dairy operations are defined as those operations producing milk, raising dairy replacement heifers, or raising calves for veal. Typically, dairy operations combine milk production and the raising of heifers (immature females) as replacements for mature cows that no longer produce milk economically. However, some milk producers obtain some or all replacement heifers from operations specializing in raising heifers (stand-alone heifer operations). Although some dairies raise veal calves, veal production is typically specialized at operations solely raising veal calves.

4.1 Size and Location of Industry

For several decades, the number of milk producing cows has steadily decreased while the volume of milk produced has continually increased. This increased productivity has been the result of improvements in breeding programs and feeding and management practices. Concurrently, there has been an ongoing consolidation in the dairy industry resulting in fewer but larger farms. Between 1988 and 1997, the number of dairy cows in the U.S. decreased by 10% and the number of dairy farms decreased by 43% (USDA, 1995 and 1999b).

In 1997, there were approximately 117,000 dairy farms in the U.S. (Table 4-1). These farms housed 9,309,000 mature (lactating) cows and 3,829,00 heifers (Table 4-2). Dairy farms vary in size from herds of less than 200 to herds of 3,000 to 5,000 mature cows (Cady, 2000). For this study, dairy farm capacity is based on the inventory of mature dairy cows reported to USDA.

Table 4-3 shows the number of farms, number of milk cows, and average herd size by size of operation. About 96% of the dairy farms in the U.S. have herds of 350 or less animals. Farms with 200 or less mature cows account for more than 50% of the total number of mature cows in the U.S. A typical herd size is 47 head for a small dairy and 1,400 head for a large dairy. Between 1993 and 1997, the number of operations with less than 200 mature cows decreased but the number of operations with more than 200 mature cows increased by almost 7%. In spite of

Table 4-1.

Number of Dairy Farms by Herd Size in 1997

STATE	CAPACITY			
	<350 Head	350-700 Head	>700 Head	
ALABAMA	591	14	3	
ALASKA	30	0	0	
ARIZONA	163	21	63	
ARKANSAS	1186	7	0	
CALIFORNIA	1440	547	663	
COLORADO	752	39	23	
CONNECTICUT	356	11	3	
DELAWARE	127	4	1	
FLORIDA	546	58	62	
GEORGIA	921	45	18	
HAWAII	35	4	5	
IDAHO	1224	90	90	
ILLINOIS	2220	17	1	
INDIANA	3191	21	4	
IOWA	4175	28	4	
KANSAS	1449	11	6	
KENTUCKY	3373	18	2	
LOUISIANA	961	17	4	
MAINE	673	10	2	
MARYLAND	1071	16	4	
MASSACHUSETTS	475	7	1	
MICHIGAN	3887	81	22	
MINNESOTA	9514	75	14	
MISSISSIPPI	673	14	1	
MISSOURI	4154	20	1	
MONTANA	716	5	0	
NEBRASKA	1336	13	3	
NEVADA	123	6	9	
NEW HAMPSHIRE	323	5	1	
NEW JERSEY	293	3	0	
NEW MEXICO	408	19	96	
NEW YORK	8481	194	57	
NORTH CAROLINA	1053	31	8	
NORTH DAKOTA	1164	5	2	
OHIO	5383	38	4	
OKLAHOMA	1900	15	6	
OREGON	992	44	16	
PENNSYLVANIA	10841	71	8	
RHODE ISLAND	45	0	0	
SOUTH CAROLINA	376	15	2	
SOUTH DAKOTA	1781	17	5	
TENNESSEE	2060	32	4	
TEXAS	3828	188	97	
UTAH	830	47	14	
VERMONT	1885	45	10	
VIRGINIA	1632	36	3	
WASHINGTON	1100	130	72	
WEST VIRGINIA	672	4	0	
WISCONSIN	22374	171	31	
WYOMING	334	3	0	
UNITED STATES	**113117**	**2312**	**1445**	**116,874**

ERG, 2000

Table 4-2.

Dairy Cow Inventory by State

STATE	INVENTORY (1,000 Head)		
	Heifers	Cows	
ALABAMA	10	31	
ALASKA	0	1	
ARIZONA	20	122	
ARKANSAS	21	54	
CALIFORNIA	623	1,379	
COLORADO	42	84	
CONNECTICUT	12	29	
DELAWARE	2	10	
FLORIDA	38	158	
GEORGIA	32	98	
HAWAII	5	10	
IDAHO	113	268	
ILLINOIS	61	135	
INDIANA	66	140	
IOWA	94	235	
KANSAS	42	81	
KENTUCKY	54	150	
LOUISIANA	17	68	
MAINE	21	40	
MARYLAND	32	86	
MASSACHUSETTS	9	27	
MICHIGAN	137	312	
MINNESOTA	302	579	
MISSISSIPPI	18	48	
MISSOURI	71	180	
MONTANA	7	20	
NEBRASKA	24	69	
NEVADA	9	26	
NEW HAMPSHIRE	7	19	
NEW JERSEY	6	21	
NEW MEXICO	42	197	
NEW YORK	288	699	
NORTH CAROLINA	32	80	
NORTH DAKOTA	19	60	
OHIO	123	275	
OKLAHOMA	38	93	
OREGON	47	92	
PENNSYLVANIA	259	631	
RHODE ISLAND	1	2	
SOUTH CAROLINA	9	26	
SOUTH DAKOTA	33	110	
TENNESSEE	57	115	
TEXAS	94	390	
UTAH	45	90	
VERMONT	54	158	
VIRGINIA	61	125	
WASHINGTON	91	255	
WEST VIRGINIA	8	19	
WISCONSIN	632	1,409	
WYOMING	1	7	
UNITED STATES	**3,829**	**9,309**	**13,318**

USDA, 1999a

Table 4-3.

Total Milk Cows by Size of Operation in 1997

Farm Size[a]	Number of Operations	Total Number of Milk Cows	Average Milk Cow Herd Size
0-199 Head	109,736	5,186,000	47
200-349 Head	3,381	795,000	235
350-700 Head	2,312	1,064,000	460
>700 Head	1,445	2,050,455	1,419
Total United States	116,874	9,095,455	78

[a]Based on inventory
USEPA, 2001

the trend towards fewer but larger operations, smaller farms still account for a significant percentage of the milk produced in the U.S.

Ten states account for 64% of total U.S. milk production capacity. The majority of dairy operations are located in the Midwest, followed by the Mid-Atlantic region. The states with the largest number of dairy operations are Wisconsin (22,576), Pennsylvania (10,920), Minnesota (9,603), and New York (8,732) (Table 4-1). These four states account for almost half the dairy farms in the U.S. Although California has only 2,650 dairy farms, it is the largest milk-producing state. Of the large dairies (greater than 700 cows), California has the most operations (46%). Wisconsin has the largest number of mature cows (1,409,000) followed by California (1,379,000), New York (699,000), and Pennsylvania (631,000) (Table 4-2).

The data in Tables 4-1 through 4-3 do not include stand-alone heifer operations. While most replacement heifers are raised on dairy farms, it has been estimated that 10 to 15% of dairy cow replacements are obtained from stand-alone heifer operations (Gardner, 1999 and Jordan 1999). The actual number of stand-alone heifer operations in the U.S. is unknown as is the number raised in total confinement versus pasture-based operations. It has been estimated, however, that there are approximately 5,000 such operations in the U.S.

4.2 Production Cycles

The primary function of a dairy is the production of milk, which requires a herd of mature dairy cows that are lactating. In order to produce milk, the cows must be bred and give birth. The gestation period is 9 months, and dairy cows are bred again 4 months after calving. Thus, a mature dairy cow produces a calf every 12 to 14 months. Therefore, a dairy operation will have several types of animal groups present, including calves, heifers, mature cows (lactating and dry cows), veal calves, and bulls.

4.2.1 Mature Cows (Lactating and Dry Cows)

The production cycle in the dairy industry begins with the birth of calves which causes the onset of lactation (milk production). A period of between 10 and 12 months of milk production is followed normally by a two-month dry period. The dry period allows for physiological preparation for the next calving (USDA, 1996a). At the time milking normally is stopped, a cow normally will be in the seventh month of a nine month pregnancy. A high frequency of calf production is necessary to maintain a cost-effective level of milk production. The rate of milk production peaks shortly after calving and then slowly declines with time. Average U.S. milk production is about 17,000 pounds per cow per year. However, herds with averages of 22,000 to 24,000 pounds of milk per cow per year or higher are not unusual.

About 25% of a milking herd typically is replaced each year, but replacement levels can be as high as 40% for intensively managed herds (USDA, 1996a). Mature cows are replaced or culled for a variety of reasons including low milk production and diseases such as mastitis, which is an infection of the udder. Lameness, injury, and belligerence also are reasons for culling. Nearly all culled dairy cows, approximately 96%, are slaughtered for beef, used in processed foods, or used in higher quality pet foods. The remainder is sold to other dairy operations (USDA, 1996a).

4.2.2 Calves and Heifers

Shortly after birth, calves are separated from their mothers and are generally kept isolated from older calves or in small groups until they are about two months old. After the calves are weaned (at about three months of age), they are usually moved from their individual pen or small group into larger groups of calves of similar age.

Because of the continuing need for replenishing the milking herd, approximately 50% of the female calves born are retained as milk cow replacements. Those animals selected as replacements usually are progeny of cows with a record of high milk production. Female calves not raised as replacements are sold for either veal or beef production.

Replacement heifers are either raised on-site or transferred off-site to an operation that specializes in producing dairy cattle replacements (stand-alone heifer operation). The replacement operation may raise heifers under contract, or may purchase calves and sell back the same or other animals at a later date.

In the dairy industry, both male and female animals are referred to as calves up to an age of about five months. From an age of six months until the birth of their first calf, females are called heifers, with first calving typically occurring at 25 to 28 months of age (USDA, 1996a). Replacements raised off-site may be purchased or returned either as un-bred or open (not pregnant) heifers at an age of about 13 months, or as bred heifers at an age usually of 22 to 23 months. Dairy farms that raise replacements on-site will have three age groups of animals present: calves, heifers, and mature lactating and dry (mature non-lactating) cows. Usually, the total number of calves and heifers present will be between 50 and 60% of the size of the milking herd.

4.2.3 Veal Calves

Roughly 50% of the calves produced by dairy cows are males. Because most dairy cows are bred using artificial insemination, there is little demand for male calves in the industry.

Although some dairy farms will have one or more breeding age bulls for cows that will not conceive by artificial insemination, most male calves are sold either for veal or beef production. Male calves are usually separated from the cows within three days of birth. Veal producers typically obtain calves through livestock auctions, although in some cases the calves may be taken directly from the dairy farm to the veal operation (Wilson, Stull, Terosky, 1995)

4.3 Confinement Practices

How dairy cows are confined depends on the size of operation, age of the animal, and the operator preference. Optimal housing facilities enhance the quality of milk production, and allow for the protection of the environment, yet remain cost-effective (Adams, et al, 1995). Table 4-4 summarizes the relative percentages of U.S. dairies reporting various types of housing (USDA, 1996a). (Percentages in Table 4-4 will not add to 100% because some operations use more than one type of housing). Information was not available on housing for dry cows. It is expected that dry cows are typically housed similarly to lactating cows (Stull, Berry, DePeters, 1998). Superhutches, transition barns, calf barns, and loose housing may be considered specific types of multiple animal pens. Dairies predominantly use some sort of multiple animal area for unweaned calves, weaned calves, and heifers.

Mature Cows - Breeding Cycle

The primary objective in housing for cows that are close to calving is to minimize disease and stress to both the cow and calf. Sod pastures are often used in warmer climates or during the summer. Alternatively, the cows may be housed in multiple-animal or individual pens prior to calving.

About two weeks before the cow is due she is moved to a “close-up” pen. The cow density in close-up pens is about one-half the density in lactating cow pens to allow the calving cows some space to segregate themselves from other cows if they go into labor, although calving in close-up pens is usually avoided.

Table 4-4.

Percentage of U.S. Dairies by Housing Type and Animal Group in 1995[a]

Housing Type	Unweaned Calves	Weaned Calves and Heifers	Lactating Cows	Close-Up Cows[b]
Drylot	9.1	38.1	47.2	28.9
Freestall	2.5	9.7	24.4	5.6
Hutch	32.5	NA	NA	NA
Individual Pens	29.7	6.6	2.3	38.3
Multiple animal area[c]	40.0	73.9	17.9	26.3
Pasture	7.4	51.4	59.6	41.9
Tie stall/stanchion	10.5	11.5	61.4	26.3

USDA, 1996a

[a] Percentages will not add to 100% because some operations use more than 1 type of housing.

[b] Cows close to calving.

[c] Superhutches, transition barns, calf barns, and loose housing.

When birth is very near, cows are moved to a maternity area for calving. If the climate is sufficiently mild, pastures can be used for a maternity area; otherwise, small individual pens are used. Approximately 45% of all dairy farms have maternity housing apart from the housing used for the lactating cows. This feature is more prevalent in larger farms than in smaller farms. Approximately 87% of farms with 200 or more cows have a separate maternity housing (USDA, 1996a).

Mature Cows - Milking Center

Lactating cows require milking at least twice per day and are either milked in their tie stalls or are led into a separate milking center. Milking centers (also called parlors) are separate buildings, apart from the lactating cow confinement. The center is designed to facilitate changing the groups of cows milked and to allow workers access to the cows during milking. A holding area confines cows that are ready for milking. Usually, the holding area is enclosed and is a part of the milking center, which in turn, may be connected to the barn or located in the immediate vicinity of the cow housing.

Cows that are kept in tie stalls may be milked from their stalls. The housing is equipped with a pipeline system that flows around the barn and contains ports in each stall for collecting milk. Approximately 70% of dairy operations reported that they milk the cows from their tie stalls, while only 29% reported that they used a milking center. However, more than half of the lactating cow population (approximately 55%) is milked in a milking center (USDA, 1996a, 1996b). Therefore, it can be interpreted that many of the large dairies are using milking centers, while the smaller dairies are typically using tie stalls.

Mature Cows - Lactating and Dry Herd

When not being milked, the herd is confined in freestall barns, drylots, tie stalls/stanchions, pastures, or combinations of these. Dry cows are confined in loose housing or freestalls (Stull, et al., 1998). These housing types are described below.

Freestall Barn. The free-stall barn is the predominate type of housing system used on larger dairy farms for lactating cows. In a free-stall barn, cows are grouped in large pens with free access to feed bunks, waterers, and stalls for resting. Standard free-stall barn design has a feed alley in the center of the barn separating two feed bunks on each side. On each side of the barn is an alley between the feed bunk and the first row of free-stalls and an alley between the first row of free-stalls facing the feed bunk and a second row of free-stalls facing the side-wall of the structure. These are the primary areas of manure accumulation with little manure excreted in the free-stalls. There may or may not be access to an outside drylot for exercise or pasture for exercise and grazing.

A variety of types of bedding materials are used in free-stall barns for animal comfort and to prevent injury. Straw, sawdust, wood shavings, and rubber mats are the most commonly used materials but bedding materials used include sand, shredded newspaper, and composted manure solids.

Drylots. In warmer climates, cows simply may be confined in a drylot with unlimited access to feed bunks, waters, and usually an open structure to provide shade. Drylot confinement facilities for dairy cattle are similar to beef feedlots described in Chapter 3.0. As with beef feedlots, no bedding materials are used.

Tie Stalls/Stanchions. Stanchion or tie-stall barns still are common on smaller dairy farms, especially those with older confinement facilities. With this type of housing system, cows are confined in a stall for feeding and frequently also milking but have access to a drylot or pasture for exercise. A mechanically cleaned gutter is located behind each row of stalls for manure collection and removal. Usually straw, sawdust, or wood

shavings are used as bedding materials in stanchion and tie-stall barns to absorb urine and allow manure to be handled as a solid. Thus, manure produced in stanchion and free-stall barns contains more bedding than that produced in free-stall barns.

Loose Housing. Barns, shades, and corrals are defined as loose housing. The design of these facilities depends upon the number of cows, climate, and manure-handling techniques.

Pastures. Depending on the farm layout, availability of pastureland, and weather conditions, cows may spend part or most of their day in a pasture. On some farms, the cows may be contained outdoors during the day, but are housed in a tie stall or freestall overnight.

Calves

Calves are confined separately from other cattle until they reach six months of age. Sickness and mortality rates are highest among calves under two months of age; therefore, the housing for this group typically minimizes environmental stress by protecting the calves against heat, wind, and rain. Common calf housing types include individual animal pens and hutches. These housing types are described below.

Individual Pens. Individual pens are sized to house animals individually and separate from others. (Stull, et al., 1998). Individual pens can be used inside a barn to provide isolation for each calf (Bickert, et al., 1997).

Hutches. Hutches are portable shelters typically made of wood, fiberglass, or polyethylene and are placed in outdoor areas. One end of the hutch is open and a wire fence may be provided around the hutch to allow the calf to move outside. (Bickert, et al., 1997).

After calves are weaned, they are typically moved from individual pens or small group pens into housing containing a larger number of calves. Transition housing is used for calves from weaning to about 5 months of age. The most common types of housing used for weaned calves are calf shelters or superhutches, and calf barns (Bickert, et al., 1997).

Heifers

The confinement used for heifers may include the same types used for weaned calves but may also include a pasture, in which the herd is allowed to move about freely and to graze. The majority of heifers are on drylots; however, heifers may also be housed in freestall barns.

Veal Calves

Veal calves are generally grouped by age in an environmentally controlled building. The majority of veal operations utilize individual stalls or pens. Floors are constructed of either wood slats or plastic-coated expanded metal. The slotted floors allow for efficient removal of manure. Individual stalls allow regulation of air temperature and humidity through heating and ventilation, effective management and handling of manure, limited cross-contamination of pathogens between calves, individual observation and feeding, and, if necessary, examination and medical treatment (Wilson, Stull, Terosky, 1995).

4.4 Feeding Practices

Feeding and watering practices vary for each type of animal group at the dairy. Most dairies deliver feed several times each day to the cows, and provide a continuous water supply. The type of feed provided varies and is based on the age of the animal and the level of milk production to be achieved.

Feeding requirements of dairy animals will influence the physical state of the manure generated, thereby influencing the manure management system. Animals fed liquid diets will generate manure that is liquid or slurry in nature, while those fed solid diets will produce solid manure that will have different manure management requirements.

Dairy cattle, including calves being raised as replacements after weaning, are fed roughage-based diets. The principal constituents of these diets are corn or grain sorghum silages and legume or grass and legume hays with feed grains and by-product feedstuffs added in varying

amounts to satisfy energy, protein, and other nutrient requirement. Because of milk production, lactating cows have higher nutrition requirements than heifers and dry cows and are fed diets containing higher proportions of silages and supplements. Manure that is generated will be in solid or semi-solid state. To maximize feed intake, lactating cows may be fed several times a day. In contrast, heifers and dry cows usually are fed only twice a day to avoid excessive weight gain. Continuous access to water is critical especially for lactating cows because milk is about 95% water.

Calves are nursed for four to five days after birth when colostrum production ceases and marketable milk production begins. Calves then are fed a milk replacer until weaning generally at about eight weeks of age. During this period, a feed grain based starter diet is introduced. This starter diet is fed up to about three months of age when rumen development allows a shift to a roughage-based diet. Calves raised for veal only are fed a milk replacer until slaughter. Therefore, manure generated will be in a liquid state.

4.5 Manure Management Practices

Dairy manure management systems are generally designed based on the physical state of the manure being handled. Dairy cattle manure is collected and managed as a liquid, a semi-solid or slurry, and a solid. Manure with a total solids or dry matter content of 20% or higher usually can be handled as a solid while manure with a total solids content of 10% or less can be handled as a liquid. Most dairies have both wet and dry manure management systems (USDA, 1997).

In a slurry or liquid system, manure is flushed from alleys or pits to a storage facility. Typically, effluent from the solids separation system or supernatant from ponds or anaerobic lagoons is used as flush water. The supernatant is the clear liquid overlying the solids that settle below. Dairy manure that is handled and stored as a slurry or liquid may be mixed with dry manure. Liquid systems are usually favored by large dairies for their lower labor cost and because the larger dairies tend to use automatic flushing systems.

4.5.1 Dairy Manure Collection and Transport

Manure accumulates in confinement areas such as barns, drylots, and milking center, and is primarily deposited in areas where the herd is fed and watered. Drylots are used to house calves, and heifers. Either drylots or freestall barns are used to house the lactating herd when they are not milked. The milking center houses the lactating herd when they are being milked.

The following methods are used at dairy operations to collect accumulated manure for disposal.

Drylots

Manure produced in drylots used for confining dairy cattle, including lactating and dry cows, heifers, and calves being raised as replacements, generally is removed by scraping using a tractor-mounted blade. As with beef feedlots, the rate of manure accumulation in drylots for dairy cattle is highest along feed bunks and this area will be scraped more frequently than other areas of the lot and may be paved. Due to loss of moisture through evaporation and drainage, drylot manure can either be spread directly after collection or stored in stockpiles for subsequent disposal by land application. Manure scraped from areas along feed bunks usually is stock piled and spread when the lot is completely scraped. Factors that affect emissions from drylots include the number of animals on the lot and the moisture of the manure. The number of animals will influence the amount of manure generated and the amount of dust generated. In well-drained drylots, emissions of nitrogen oxides are likely to occur because decomposition of manure will be aerobic. In wet drylots, decomposition will be anaerobic and will likely have emissions of ammonia, hydrogen sulfide, and other odor causing compounds. Additionally, the drylot is a potential air release point of particulate matter/dust from feed and movement of cattle.

Freestall Barns and Milking Centers

Dairy cattle manure accumulations in freestall barns are typically collected and removed by mechanized scraping systems or by using a flush system.

Mechanical/Tractor Scraper. Manure and bedding from barns and shade structures are collected normally by tractor or mechanical chain pulled scrapers. Dairies using scrapers to remove manure from freestall barns are often referred to as scrape dairies. Eighty-five percent of operations with more than 200 milking cows use a mechanical or tractor scraper (USDA, 1996b). Tractor scraping is more common since the same equipment can be used to clean outside lots as well as freestalls and loose housing. A mechanical alley scraper consists of one or more blades that are wide enough to scrape the entire alley in one pass. A timer can be set so that the scraper runs two to four times a day, or continuously in colder conditions to prevent the blade from freezing to the floor. Scrapers reduce daily labor requirements, but have a higher maintenance cost due to corrosion and deterioration.

Flush Systems. Manure can be collected from areas with concrete flooring by using a flushing system. A large volume of water is introduced at the head of a paved area, and the cascading water removes the manure. Flush water can be introduced from storage tanks or high-volume pumps. The required volume of flush water varies with the size of the area to be flushed and slope of the area. The total amount of flush water introduced can be minimized by recycling from the supernatent of a storage pond or anaerobic lagoon; however, only fresh water can be used to clean the milking parlor area.

Gutter Cleaner/Gravity Gutters. Gutter cleaners or gravity gutters are frequently used in confined stall dairy barns. The gutters are usually 16 to 24 inches wide, 12 to 16 inches deep, and flat on the bottom. Either shuttle-stroke or chain and flight gutter cleaners are typically used to clean the gutters. About three-fourths (74%) of U.S. dairy operations with less than 100 milking cows and approximately one-third of U.S. dairy operations with 100 to 199 milking cows use a gutter cleaner (USDA, 1996b).

Slatted floors/Slotted floors. Freestall dairy barns also may have slatted floors located over a storage tank. Manure is forced through the openings between the slats, which are manufactured using reinforced concrete, as the animals move about the barn. The cost of slatted floors has limited their use in the dairy industry. Generally some water has to be added to allow removal of manure from storage tanks under slatted floors by pumping.

Most dairies can be grouped into one of three categories depending on the method of removing manure from the freestall barn: Flush Dairy, Scrape Dairy, or Flushed Alley Dairy. Flushing systems are the only method of manure removal from the milking center. Dairies using flush systems to remove manure from freestall barns are referred to as flush dairies. Some dairy operations use flush water in freestall barns but only in areas where animals are fed (i.e., the feed alleys). Mechanical scrapers are used in the rest of the barn. Dairies using this type of manure removal method are referred to as flushed alley dairies. Flushing systems are predominantly used in freestall barns by large dairies with 200 or more head (approximately 27%). These systems

are much less common in freestall barns at dairies with less than 200 head (less than 5% reported using this system) (USDA, 1996b). These systems are also more common at dairies located in warmer climates. A farm type of dairy, a feedlot diary, confines animals in a drylot, similar to beef cattle and does not use a freestall barn. This type of confinement/manure management system is common in California.

The method used to transport manure from confinement depends largely on the consistency of the manure. Liquids and slurries from milking centers, freestall barns that are flushed, and run-off from drylots can be transferred through open channels, pipes, and in liquid tank wagons. Pumps can be used to transfer liquid and slurry manure as needed; however, the higher the solids content of the manure, the more difficult it is to pump.

Solid and semisolid manure from drylots can be transferred by mechanical conveyance or in solid manure spreaders. Slurries can be transferred in large pipes by using gravity, piston pumps, or air pressure. Gravity systems are preferred due to their low operating cost.

Emissions from freestall barns and milking centers are influenced by the frequency of manure removal (i.e., flush frequency or scrape frequency). The longer the manure is present, the more emissions will occur from the confinement area. Due to the wet nature of manure in these areas, decomposition will be anaerobic and emissions of ammonia, hydrogen sulfide, and other odor causing compounds will occur. These areas may also be a source of particulate matter emissions from feeding systems.

4.5.2 Manure Storage, Stabilization, and Separation

Manure collected from the confinement facilities may be transferred directly to storage or undergo solids separation or stabilization prior to storage and land application.

Storage

Solid manure (from the feedlot and from scraped freestall barns) is typically stored in uncovered storage stockpiles. Because open piles are subjected to rain, they exhibit emission profiles of both aerobic and anaerobic conditions over time. When wet, the stockpiles will be potential sources of ammonia, hydrogen sulfide, nitrous oxide, and odor causing compounds due to anaerobic decomposition. When dry, they will be emission sources of nitrous oxide from aerobic decomposition, and particulate matter.

Manure handled as a slurry or liquid is stored in either earthen storage ponds or anaerobic lagoons. Above ground tanks are another option for storage of these types of manures but are not commonly used. Storage tanks and ponds are designed to hold the volume of manure and process wastewater generated during the storage period, the depth of normal precipitation minus evaporation, and the depth of the 25-year, 24-hour storm event with a minimum of one foot of freeboard remaining at all times. Emissions from storage tanks and ponds will include ammonia, hydrogen sulfide, VOC, and methane. The magnitude of emissions will depend primarily on the length of the storage period and temperature of the manure. Low temperatures will inhibit the microbial activity responsible for the creation of hydrogen sulfide and methane, but may increase VOC emissions and odors. Long storage periods will increase the opportunity for emissions of VOC, hydrogen sulfide, and ammonia.

Stabilization

Stabilization is the treatment of manure to reduce odor and volatile solids prior to land application. Run-off from drylots and liquid manure from flush alleys are often stabilized in anaerobic lagoons. Anaerobic lagoons use bacterial digestion to decompose organic carbon into methane, carbon dioxide, water, and residual solids. A detailed discussion of anaerobic lagoons is presented in Section 5.4.3. Single cell systems combine both stabilization and storage in one earthen structure whereas two-cell systems separate stabilization and storage (i.e., anaerobic lagoon followed by a storage pond).

Emissions from anaerobic lagoons depend on the loading rate, hydraulic retention time, and temperature. The loading rate determines the size of the lagoon and how much manure can be stored. The more manure stored the higher the emissions potential. The hydraulic retention time refers to the length of time that liquids are stored. The longer the retention time, the more likely that compounds will volatilize from the lagoon. Emissions also increase with higher temperatures. Another factor influencing emissions is the proper design and maintenance. A properly operated system should have little or no volatile organic compound emissions or odors. Anaerobic lagoons at dairies emit methane, hydrogen sulfide, and ammonia.

If manure is allowed to remain on drylots for extended time periods, a significant degree of decomposition due to microbial activity occurs. When stacked for storage, a significant increase in temperature may occur depending on moisture content due to microbial heat production. Manure accumulations on drylots and stored in stacks can be sources of ammonia, hydrogen sulfide, VOC, and methane if moisture content is sufficient to promote microbial decomposition. Dry manure is a source of nitrous oxide and particulate matter/dust.

Solids Separation

In the dairy industry, liquid-solids separation may be used to the remove solids from run-off collected from drylots and flushed manure from freestall barns and milking centers. The liquid from solids separation is sent to a storage pond or anaerobic lagoon; the solid is stored in piles. Solids separation is necessary to reduce the organic loading to storage ponds and lagoons so they do not overflow. Mechanical separators (stationary screens, vibrating screens, presses, or centrifuges) or gravity settling basins may be used for this purpose. Emissions from separation activities are dependent on how frequently solids are removed. If solids remain in settling basins and mechanical separation systems longer, emissions of ammonia, hydrogen sulfide, VOC, and methane emissions may be significant. Generally, the time spent in separation activities is short (i.e., less than one day).

4.6 Dairy and Veal Model Farms

This section explains a set of model farms that were developed to characterize the dairy and veal industries. Model farms are hypothetical farms that are intended to represent the range of design and operating practices that influence emissions from each animal sector. These models can be used to develop emission estimates, control costs, and regulatory assessments. Cow-calf and stand-alone heifer operations using drylots for confinement are similar to beef feedlots, and are assumed to be adequately represented by the beef model farms. Separate model farms were developed for veal because of the differences in manure characteristics and handling operations from dairies.

The model farms include four components: confinement areas, solids separation activities, storage and stabilization practices, and land application. Land application includes emissions from the manure application activity and from agricultural soils after manure application. For the model farms, the manure land application activity was differentiated from the manure application site (i.e., cropland or other agricultural land) because emission mechanisms are different. Emissions from the application activity occur on a short time period, and are dependent on the methods by which manure is applied. Emissions from the application site occur as substances volatilize from the soil over a period of time as a result of a variety of chemical and biological transformations in the soil.

4.6.1 Dairy Model Farms

Eight model farms were developed to represent typical dairy operations. The common components of the dairy models include confinement areas (freestall barn, drylot, and milking centers), solids separation, manure storage and stabilization (anaerobic lagoons or storage ponds for liquid manure and stockpiles for solids), and land application.

As discussed in Section 4.5, all dairies will have milking centers and drylots to confine animals. Most dairies will also have a free-stall barn as well. Those dairies using flush water to remove manure in the free-stall barn are referred to as flush dairies (D1). Those using flush

water to remove manure from only the freestall barn alleys are referred to as flushed alley dairies (D4). Those using scraping to remove manure are referred to as scrape dairies (D2). Dairies not having a freestall barn at all are referred to as feedlot dairies (D3). Within each of the four basic models, two variations were developed with and without solids separation activities (D1A and D1B; D2A and D2B; D3A and D3B; and D4A and D4B).

Flush Dairy

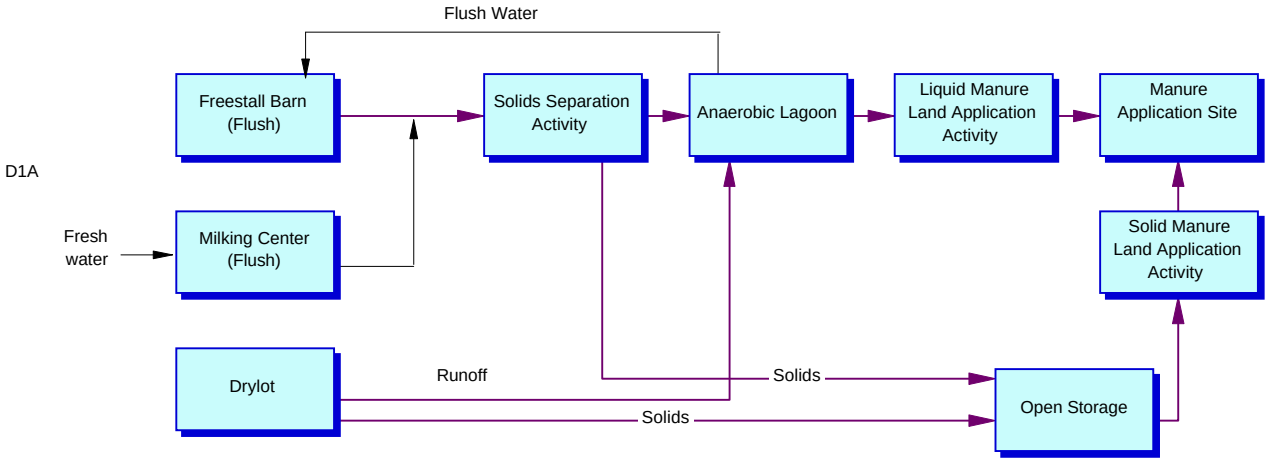

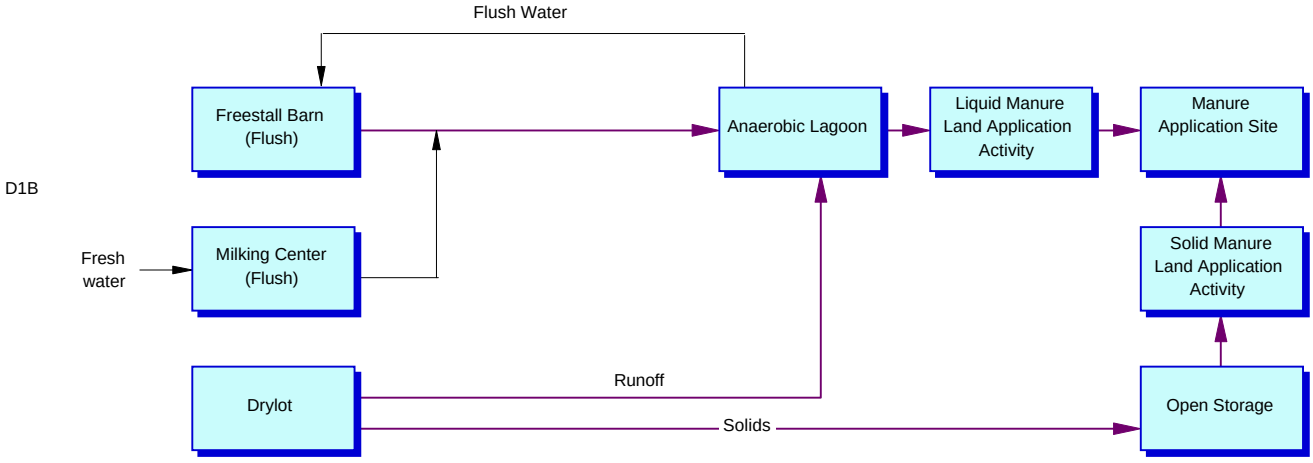

Scrape Dairy

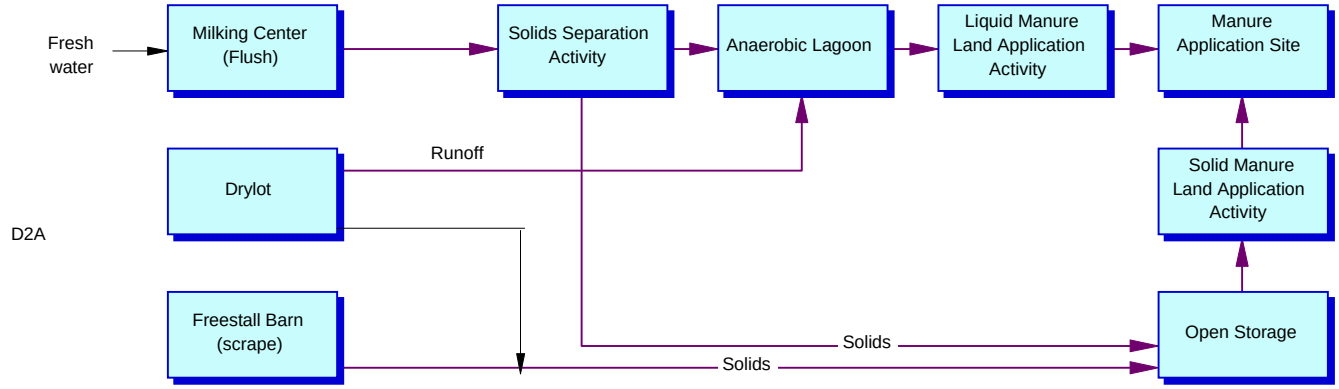

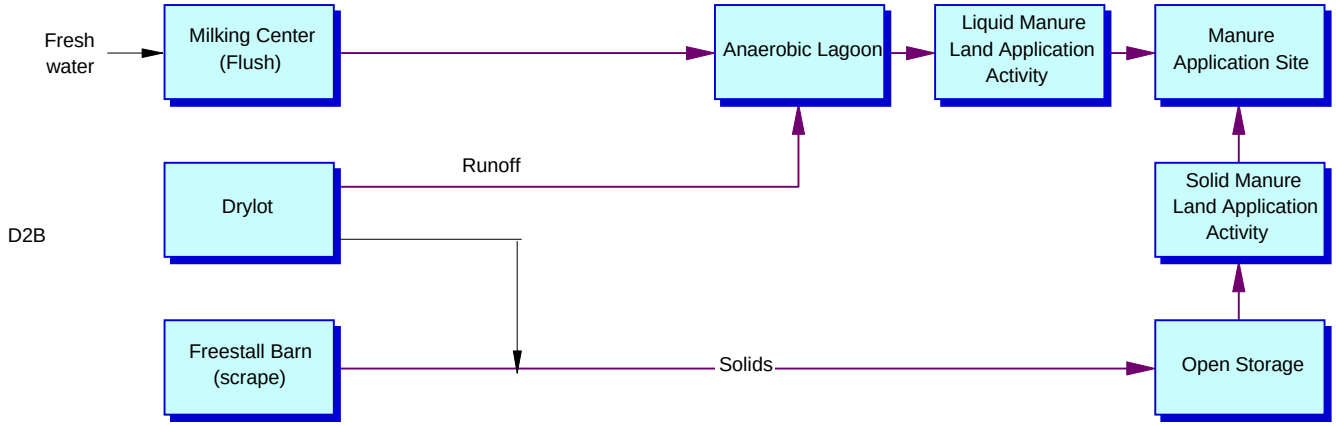

Feedlot Dairy

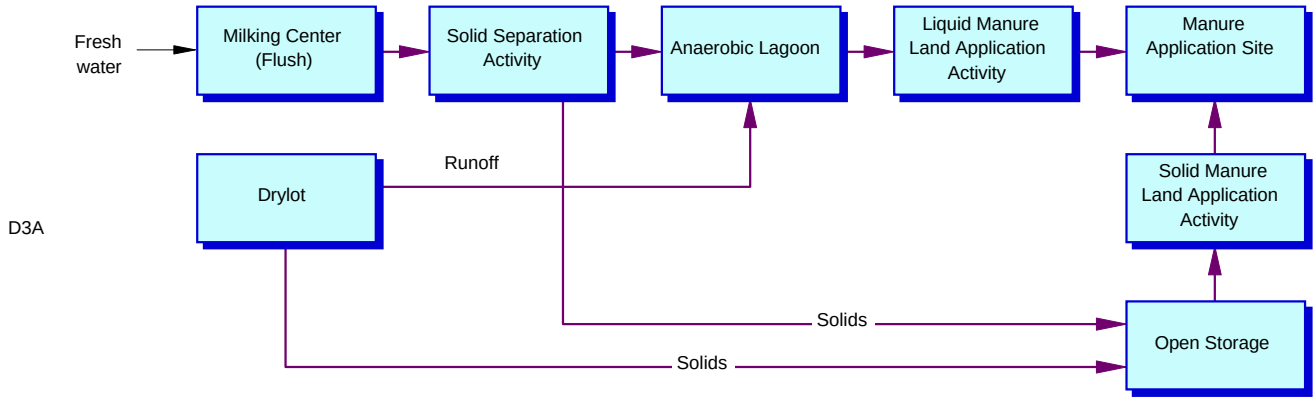

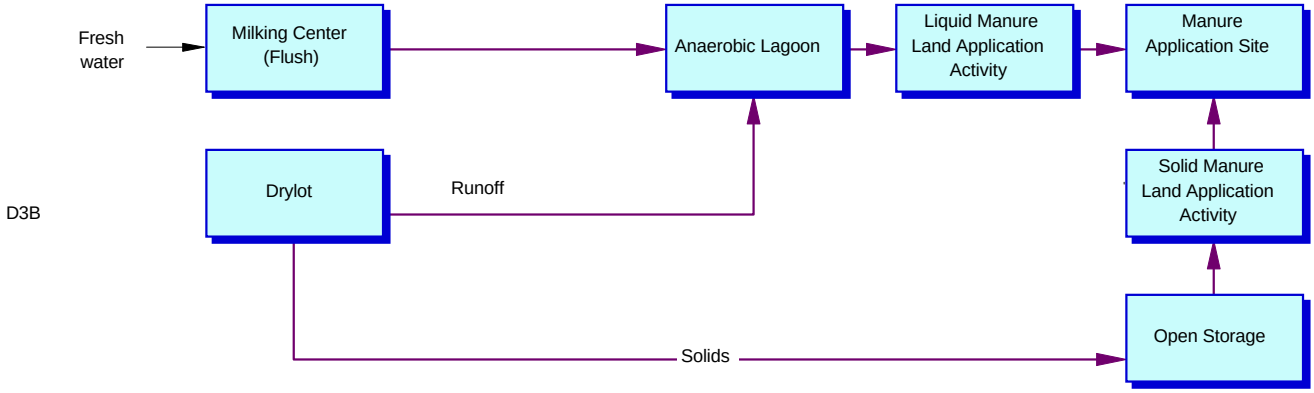

Flushed Alley Dairy

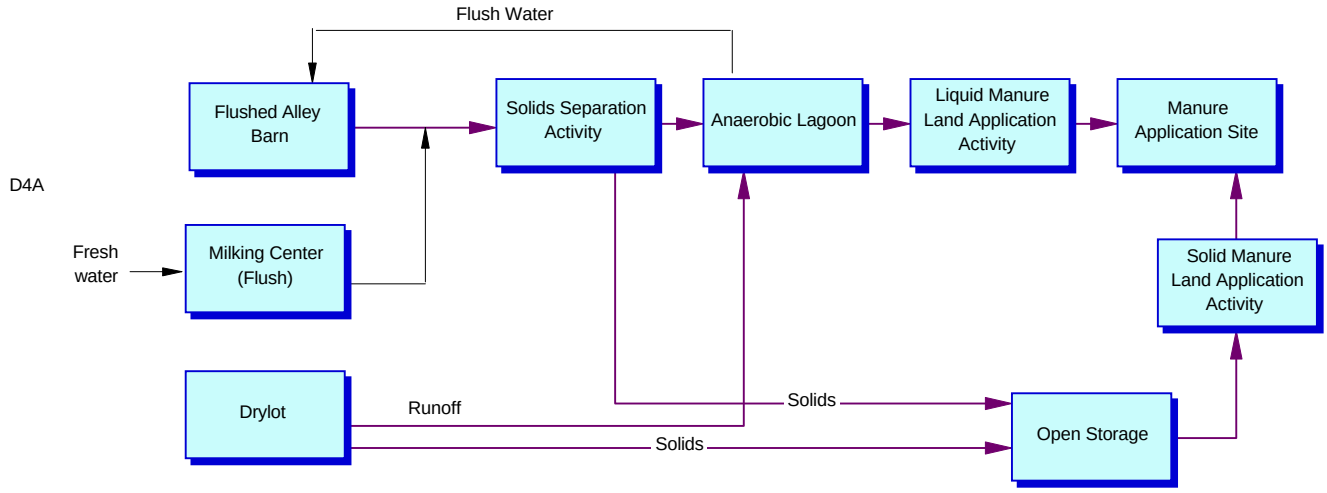

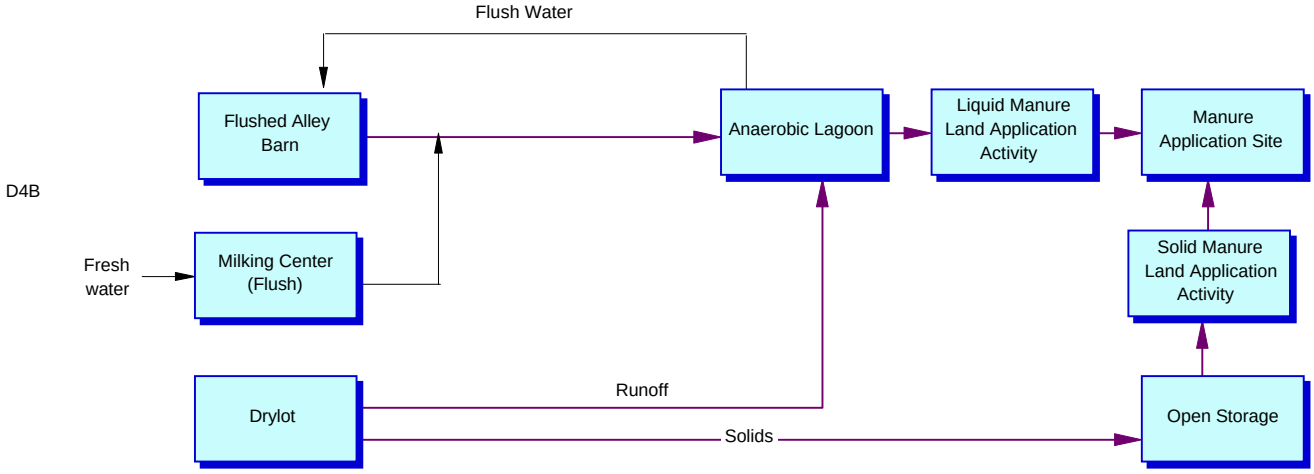

Confinement

In a dairy, cows are mostly kept in drylots, freestall barns, flushed alley freestall barns, or milking centers. In the models, freestall barns and flushed alley freestall barns are used for mature cows when they are not being milked. Heifers and dry cows are kept on drylots. Where there is no freestall barn or flushed alley barn, lactating cows are kept in drylots except during milking.

In all models, manure is collected from milking centers by flushing with fresh water. Manure is collected from drylots by a tractor scraper or front-end loader. The method used to collect manure from freestall barns varies among the models have been discussed previously.

The flushed manure from the freestall barns and milking centers is combined as it is removed, and sent to solids separation. Manure from the drylot is transported to an uncovered stockpile. Run-off from the drylot is sent to solids separation.

Solids Separation

Two model variations were developed regarding solids separation at each of the four types of model farms. In one variation, run-off from the drylot and flushed manure from the milking center and freestall barn is sent to solids separation processes prior to storage. In the other variation, manure is sent directly to storage and treatment lagoons.

In the models that used solids separation, the separated solids are sent to a stockpile and the liquid fraction is sent to a storage and stabilization lagoon. Two common types of solids separation activities were considered in developing the model farms: mechanical screens or gravity settling basins. Review of the emission mechanisms from each type of separation practice indicated that emissions would not substantially vary between mechanical screens and settling basins. Additionally, due to the short duration of time manure would be present in these activities, emissions are expected to be relatively small, thus differences between the separation processes would be insignificant. Therefore, the model farms do not distinguish the methods of

solids separation. Manure retention is expected to be short, and therefore, no emissions were estimated from solid separation activities.

Storage and Stabilization

All the model dairy farms contain storage activities for solid and liquid manure. Two types of solid manure storage activities were considered in developing the model farms. Solid manure could be: (1) stored in an uncovered stockpile, or (2) not stored at all and sent directly from the drylot to be land applied. Review of industry practices indicated that solid manure would generally not be sent directly from the drylot to be land applied, but would have some intermediate storage. Therefore, all the model farms included an uncovered stockpile.

Stabilization is the treatment of manure for reducing volatile solids and controlling odor prior to application to agricultural lands. The use of the word stabilization rather than treatment is intended to avoid the implication that treated animal manures can be discharged to surface or ground waters.

Two types of storage and stabilization processes were considered to handle the liquid fraction from the drylot run-off and the solids separation process (if used): (1) an anaerobic lagoon (sometimes referred to as a combined lagoon and storage pond, or a one-cell lagoon), or (2) an anaerobic lagoon followed by a separate storage pond (i.e., two-cell lagoon). A review of industry practices indicated that a two-cell lagoon was not commonly used. Therefore, it was not considered in developing the model farms.

Land Application

Land application is discussed in detail in Chapter 7.0. Land application includes the manure application activity and the manure application site (i.e., cropland or other agricultural land). Solid manure is assumed to be land applied to the manure application site using a solid manure spreader. Three types of liquid manure land application activities were considered in developing the model farms, land application by: (1) liquid surface spreader, (2) liquid injection

manure spreader, or (3) irrigation. Review of industry practices indicated that injection is rarely used. The emissions from irrigation and liquid surface spreading are expected to be similar due to the short duration of time for each activity and similar emission mechanisms. Therefore, the model farms only refer to liquid manure land application rather than a specific type.

4.6.2 Veal Model Farms

Two model farms were developed for veal (V1 and V2). The components of the model farms include confinement areas (enclosed housing), manure storage/stabilization facilities (anaerobic lagoons or storage pits), and land application. The two differ only by the method of manure collection and storage.

Confinement

Because of the liquid nature of veal manure, it is flushed or stored in a pit. In model farm V1, veal are kept in a confinement facility and their manure is flushed to an anaerobic lagoon. In model farm V2, veal are kept in a confinement facility with a pit underneath to store manure. The manure is then pumped to land application devices. Both methods are used in the veal industry.

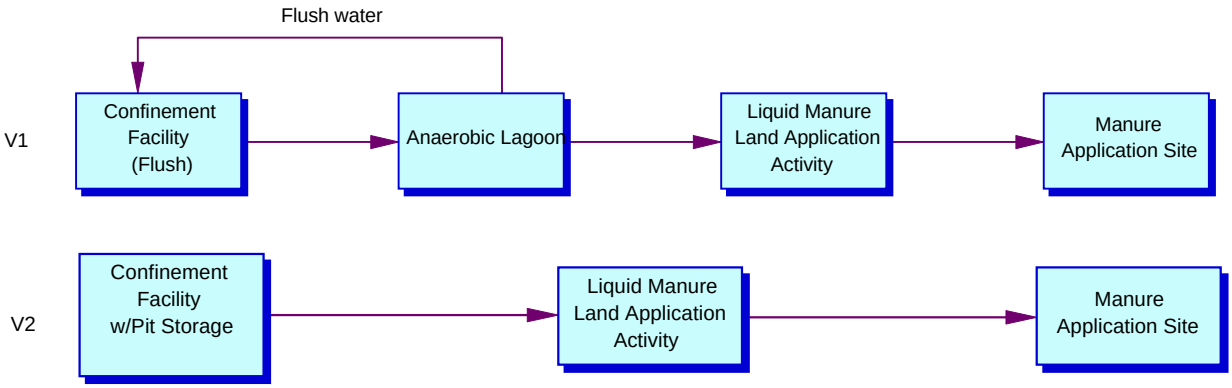

Storage and Stabilization

In model farm V1, the flushed manure is sent to stabilization and storage. Two types of storage and stabilization processes were considered in developing the model farms: (1) an anaerobic lagoon (one-cell), or (2) an anaerobic lagoon followed by a separate storage pond (two-cell). Review of industry practices indicated that only an anaerobic lagoon (one-cell) was commonly used. Additionally, a review of emission mechanisms and existing emission data indicated that total emissions would not be substantially different between the one-cell and two-cell systems. Therefore, the model farms only include an anaerobic lagoon. The supernatant from the anaerobic lagoon is used as flush water.

Model farm V2 does not have an anaerobic lagoon. Instead the manure is directly transported from the confinement area (i.e., pit storage) to the land application device.

Land Application

Land application includes the manure application activity and the manure application site (i.e., cropland or other agricultural land). In model farms V1 and V2, the manure from the storage/stabilization system is land applied in a liquid form. Three types of land application activities were considered for liquid manure in developing the model farms, land application by: (1) liquid surface spreader, (2) liquid injection manure spreader, or (3) irrigation. Review of industry practices indicated that injection is rarely used. The emissions from irrigation and liquid surface spreading are expected to be similar due to the short duration of time for each activity and similar emission mechanisms.

4.7 References

Adams, R.S., J.W. Comerford, S.A. Ford, R.E. Graves, C.W. Heald, A.J. Heinrichs, W.R. Henning, L.J. Hutchinson, V.A. Ishler, R.B. Keyser, M.L. O'Connor, L.W. Specht, S.B. Spencer, G.A. Varga, and R.D. Yonkers. 1995. Dairy Reference Manual, 3rd Ed. NRAES-63. Natural Resource, Agricultural, and Engineering Service, Cooperative Extension.

Bickert, W.G., G.R. Bodman, B.J. Holmes, K.A. Janni, D.W. Kammel, J.M. Zulovich, and R. Stowell. 1997. Dairy Freestall Housing and Equipment, 6th Ed. MWPS-7. Midwest Plan Service. Ames, Iowa.

Cady, R., Ph.D. 2000. Monsanto Company and Founder of the Professional Dairy Heifer Growers Association. Personal communication with Eastern Research Group, Inc., February 18, 2000.

ERG. 2000. Facility Counts for Beef, Dairy, Veal, and Heifer Operations. Memorandum from Deb Bartram, Eastern Research Group, Inc. (ERG) to the Feedlots Rulemaking Record. U.S. Environmental Protection Agency (USEPA) Water Docket, W-00-27.

Gardner, R., PhD. 1999. South East District Director for the Professional Dairy Heifer Growers Association. Personal communication with Eastern Research Group, Inc., December 9, 1999.

Jordan, L. 1999. South East Regional Director for the Professional Dairy Heifer Growers Association. Personal communication with Eastern Research Group, Inc., December 8, 1999.

Stull, C., S. Berry, and E. DePeters. 1998. Animal Care Series: Dairy Care Practices, 2nd Ed. Dairy Workgroup, University of California Cooperative Extension. University of California Publishing. Davis, California.

USDA. 1995. Milk: Final Estimates 1988-1992. Statistical Bulletin 909. U.S. Department of Agriculture (USDA), National Agricultural Statistics Service (NASS). Washington, D.C.

USDA. 1996a. National Animal Health Monitoring System, Part I: Reference of 1996 Dairy Management Practices. U.S. Department of Agriculture (USDA), Animal and Plant Health Inspection Service (APHIS). Fort Collins, Colorado.

USDA. 1996b. National Animal Health Monitoring System Part III: Reference of 1996 Dairy Health and Health Management. U.S. Department of Agriculture (USDA), Animal and Plant Health Inspection Service (APHIS). Fort Collins, Colorado.

USDA. 1997. A Guide to Dairy Calf Feeding and Management. U.S. Department of Agriculture (USDA), Bovine Alliance on Management & Nutrition (BAMN). Fort Collins, Colorado.

USDA. 1999a. Cattle: Final Estimates 1994-1998. Statistical Bulletin 953. U.S. Department of Agriculture (USDA), National Agricultural Statistics Service (NASS), Washington, D.C.

USDA. 1999b. Milking Cows and Production: Final Estimates 1993-1997. Statistical Bulletin 952. U.S. Department of Agriculture (USDA), National Agricultural Statistics Service (NASS). Washington, D.C.

USEPA. 2001. Development Document for the Proposed Revisions to the National Pollutant Discharge Elimination System Regulation and the Effluent Guidelines for Concentrated Animal Feeding Operations. EPA-821-R-01-003. U.S. Environmental Protection Agency, Office of Water, Washington, D.C.

Wilson, L. L., C. Stull, and T. L. Terosky. 1995. Scientific Advancements and Legislation Addressing Veal Calves in North America. Veal Perspectives to the Year 2000, International Symposium. September 12 and 13, 1995, LeMans, France.

5.0 SWINE FEEDING OPERATIONS

The U.S. swine industry has undergone major consolidation over the past several decades. The number of hog operations, which approached 3 million in the 1950s, had declined to about 110,000 by 1997 (USDA, 1999a). The rate of consolidation has increased dramatically in the last decade, during which the number of swine operations decreased by more than 50% (USDA, 1999b). This trend toward consolidation appears to be continuing today.

While the number of operations has decreased, annual hog production has risen. The domestic hog industry is increasingly dominated by large totally enclosed confinement operations capable of handling 5,000 hogs or more at a time (USDA,1999a; USDA, 1999c). These operations typically produce no other livestock or crop commodities.

Another trend in the industry is an increasing degree of vertical integration that has accompanied consolidation. Hogs are raised by independent producers under contract with integrators who slaughter and market the hogs produced. The integrator provides the animals, feed, required vaccines and other drugs, and management guidance. The grower provides the labor and facilities, and is responsible for manure and carcass disposal. In return, each grower receives a fixed payment, adjusted for production efficiency.

These changes at both the industry and farm levels represent a significant departure from earlier eras, when hogs were produced primarily on relatively small but integrated farms where crop production and other livestock production activities occurred and where animals spent their complete life cycle at one location.

5.1 Size and Location of Swine Industry

In 1997, there were 109,754 swine operations in the U.S. These operations produced 142.6 million pigs (USDA, 1999b). Farms vary in size from operations with a few hundred pigs to some newer operations that house hundreds of thousands of animals at one time. Table 5-1 shows the distribution of farms by size (based on 1997 inventory) and state. Table 5-2 shows the

Table 5-1.

Number of Swine Operations by Size in 1997

STATE	INVENTORY			
	<2000 Head	2,000 to 4,999 Head	>5,000 Head	
ALABAMA	909	15	8	
ALASKA	53	0	0	
ARIZONA	201	4	1	
ARKANSAS	1115	89	43	
CALIFORNIA	1579	4	10	
COLORADO	1202	9	14	
CONNECTICUT	210	0	0	
DELAWARE	127	4	1	
FLORIDA	1429	2	0	
GEORGIA	1706	39	19	
HAWAII	247	1	0	
IDAHO	711	3	0	
ILLINOIS	6673	381	114	
INDIANA	6003	326	113	
IOWA	15711	1224	308	
KANSAS	2719	76	36	
KENTUCKY	1826	38	17	
LOUISIANA	631	1	1	
MAINE	341	0	0	
MARYLAND	574	10	0	
MASSACHUSETTS	382	1	0	
MICHIGAN	2729	91	33	
MINNESOTA	6873	463	176	
MISSISSIPPI	627	23	12	
MISSOURI	5192	165	62	
MONTANA	597	23	7	
NEBRASKA	5753	189	75	
NEVADA	112	0	1	
NEW HAMPSHIRE	249	0	0	
NEW JERSEY	428	2	1	
NEW MEXICO	346	0	0	
NEW YORK	1498	9	1	
NORTH CAROLINA	1756	648	582	
NORTH DAKOTA	782	10	5	
OHIO	5801	125	26	
OKLAHOMA	2936	36	30	
OREGON	1382	1	0	
PENNSYLVANIA	3305	115	36	
RHODE ISLAND	60	0	0	
SOUTH CAROLINA	1184	27	15	
SOUTH DAKOTA	2775	68	56	
TENNESSEE	2019	18	6	
TEXAS	5410	5	13	
UTAH	499	3	9	
VERMONT	238	0	0	
VIRGINIA	1140	20	10	
WASHINGTON	974	4	0	
WEST VIRGINIA	645	0	0	
WISCONSIN	3629	51	6	
WYOMING	292	0	4	
UNITED STATES	**103580**	**4323**	**1851**	**109,754**

USDA, 1999a

Table 5-2.

U.S. Swine Operations and Inventory by Farm Size in 1997

Farm Size[a]	Percent of Operations	Percent of National Inventory
<1,999 Head	94.4	39.3
2,000 - 4,999 Head	3.9	20.8
>5,000 Head	1.7	40.2

[a] Based on Inventory
USEPA, 2001

1997 animal population by farm size. These data show the increasing dominance by large operations. In 1997, 94% of the farms had a capacity of 2,000 pigs or less. These smaller operations confined 40% of the total inventory of pigs. In contrast, larger operations, which represent 6% of the number of farms, confined 60% of the inventory. The largest 2% of farms (>5000 head) confined 40% of the inventory (USEPA, 2001). Table 5-3 shows the total inventory by state of breeding sows and hogs raised for market.

Swine production historically has been centered in the Midwest, with Iowa being the largest hog producing state in the country. Although the Midwest continues to be the nation's leading hog producer (five of the top seven producing states are still in the Midwest), significant growth has taken place in other areas. Perhaps the most dramatic growth has occurred in the Mid-Atlantic Region, in North Carolina. From 1987 to 1997, North Carolina advanced from being the 12th largest pork producer in the nation to second behind only Iowa. The idea of locating production phases at different sites was developed in North Carolina. The state also has a much higher per farm average inventory than any of the states in the Midwest. Whereas Iowa had an average of fewer than 850 head per farm, North Carolina had an average of more than 3,200 head per farm in 1997 (USEPA, 2001).

Growth has occurred elsewhere as well. There has been significant growth in recent years in the panhandle area of Texas and Oklahoma, Colorado, Utah, and Wyoming. Some of the very large new operations have been constructed in these States. Since this growth has taken place in

Table 5-3.

Swine Inventory by State in 1997

STATE	INVENTORY (1,000 Head)	
	Breeding	Market
ALABAMA	20	170
ALASKA	1	2
ARIZONA	15	130
ARKANSAS	113	768
CALIFORNIA	27	183
COLORADO	160	630
CONNECTICUT	1	4
DELAWARE	4	26
FLORIDA	10	45
GEORGIA	70	498
HAWAII	5	24
IDAHO	4	26
ILLINOIS	545	3,993
INDIANA	448	3,265
IOWA	1,295	11,980
KANSAS	196	1,296
KENTUCKY	71	499
LOUISIANA	5	27
MAINE	1	5
MARYLAND	11	74
MASSACHUSETTS	3	16
MICHIGAN	130	895
MINNESOTA	625	4,800
MISSISSIPPI	28	192
MISSOURI	445	3,018
MONTANA	20	160
NEBRASKA	440	3,085
NEVADA	1	7
NEW HAMPSHIRE	1	4
NEW JERSEY	3	20
NEW MEXICO	1	5
NEW YORK	11	68
NORTH CAROLINA	1,000	8,675
NORTH DAKOTA	24	176
OHIO	203	1,335
OKLAHOMA	211	1,319
OREGON	5	30
PENNSYLVANIA	119	941
RHODE ISLAND	1	2
SOUTH CAROLINA	35	270
SOUTH DAKOTA	161	1,069
TENNESSEE	45	295
TEXAS	75	505
UTAH	55	240
VERMONT	1	2
VIRGINIA	43	357
WASHINGTON	6	33
WEST VIRGINIA	3	13
WISCONSIN	126	639
WYOMING	19	76
UNITED STATES	**6,810**	**51,697**

USDA, 1999b

the past three years, these operations are not reflected in the 1997 statistics presented in this report (USEPA, 2001).

5.2 Swine Production Cycles

The production cycle for hogs has three phases: farrowing, nursing, and finishing. Some farms specialize in a single phase of the growth cycle, while other farms may handle two or all three phases.

The first phase begins with breeding and gestation over a 114 day period followed by farrowing (giving birth). After farrowing, the newly born pigs or piglets normally are nursed for a period of three to four weeks until they reach a weight of 10 to 15 pounds. Typically, there are from 9 to 11 pigs per litter, with a practical range of 6 to 13. The average number of pigs weaned per litter in 1997 was 8.7. Sows can be bred again within a week after a litter is weaned. Sows normally produce five to six litters before they are sold for slaughter at a weight of 400 to 460 pounds. After weaning, pigs are relocated to a nursery.

Nursery operations receive weaned pigs and grow them to a weight of 40 to 60 pounds (feeder pigs). Weaned pigs are fed a starter ration until they reach a weight of 50 to 60 pounds. At this point, they are eight to ten weeks of age. The third phase of swine production is the growing-finishing phase where the gilts (young females) and young castrated boars (males) not retained for breeding are fed until they reach a market weight, typically between 240 and 280 pounds. In this phase of swine production, a growing ration is fed to a weight of 120 pounds and is then followed by a finishing ration. Growing-finishing usually takes between 15 and 18 weeks. Hogs normally are slaughtered at about 26 weeks of age. After weaning, swine typically are fed a corn-soybean meal based diet that may include small grains such as wheat and barley and other ingredients until slaughtered.

Swine operations can be of several types. The most common is the farrow-to-finish operation that encompasses all three phases of swine production. Another common production mode is the combination of the farrowing and nursing phases, which provide feeder pigs for

stand-alone grow-finish operations. Although not as common, some newer farms may operate only the farrowing phase or only the nursery phase.

The annual production capacity of a farrowing operation is determined by the number of sows that can be confined and the number of litters of pigs produced per sow each year. Because the gestation period for the pig is 114 days, more than one litter of pigs can be produced per sow each year.

The annual production capacity of a farrow-to-finish or a grow-finish operation is determined by capacity of the confinement facility, the duration of the growing period, and the time required to clean out and disinfect the confinement facility between herds. The latter two factors determine the number of groups of pigs (i.e., or turnovers) per year. The grow-finish production phase usually takes between 15 and 18 weeks. The length of the grow-finish cycle depends on the finished weight specified by the processor. Extremely hot or cold weather can reduce rate of weight gain and also lengthen the grow-finish period. The duration of the clean-out period between groups of feeder pigs may be only a few days or several weeks depending on market conditions. A typical range for a grow-finish operation is 2.4 to 3.4 turnovers per year.

Turnovers affect the amount of manure generation. A grow-finish operation with a confinement capacity of 1,000 pigs and 2.4 turnovers per year will produce approximately 2,400 pigs for slaughter per year whereas the same operation with 3.4 turnovers per year will produce 3,400 pigs per year. Assuming the same initial and final weights and the same rate of weight gain, this difference translates into one third more manure production per year.

Production practices tend to vary regionally depending on climate conditions, historical patterns, and local marketing and business practices. Table 5-4 presents the frequency of farrowing, nursing, and finishing operations in the three major hog production regions. Based on survey results in 1995, 61.9% respondents were farrow-to-finish operations and 24.3% were grow-finish operations (USDA, 1995). Although many large operations are farrow-to-finish operations, this no longer is the norm. New operations commonly specialize in either feeder pig

Table 5-4.

Frequency of Production Phase in 1995 (Percent of Farms)[a]

Production Phase	Size	USDA APHIS Region[b]		
		Midwest	North	Southeast
Farrowing	<5000 hogs marketed	76.6	68.6	69.3
Nursery		20.1	51	57.8
Finishing		78.8	79.7	93.4
Farrowing	>5000 hogs marketed	44.8	80.4	89
Nursery		75	67.1	97.4
Finishing		45.8	69.7	62.8

[a] Totals do not add to 100 percent because many operations combine production phases.
[b] Midwest=SD, NE, MN, IA, IL; North=WI, MI, IN, OH, PA; Southeast=MO, KY, TN, NC, GA
USDA, 1995

production, nursery, or grow-finish phases of the production cycle. These operations may be linked by common ownership or separately owned, but all under contract with a single integrator. Thus, pigs may begin their life-cycle in a sow herd on one site, move to a nursery on another, and then move again to a finishing facility. Specialized operations can take advantage of skilled labor, expertise, advanced technology, streamlined management, and disease control.

5.3 Swine Confinement Practices

Table 5-5 summarizes the five major housing configurations used by domestic swine producers. Although there are still many operations where pigs are raised outdoors, the trend in the swine industry is toward larger operations where pigs are raised in totally or partially enclosed confinement facilities. Typically, the gestation and farrowing, nursery, and grow-finish phases of the production cycle occur in separate, specially designed facilities.

Table 5-5.

Typical Swine Housing Confinement Facilities

Facility Type[a]	Description	Applicability
Total confinement	Pigs are raised in pens or stalls in environmentally controlled building	Most commonly used in nursery and farrowing operations and all phases of very large operations. Particularly common in the Southeast
Open building with no outside access	Pigs are raised in pens or stalls but are exposed to natural climate conditions	Relatively uncommon but used by operations of all sizes
Open building with outside access	Pigs are raised in pens or stalls but may be moved to outdoors	Relatively uncommon, but used by some small to mid-sized operations
Lot with hut or no building	Pigs are raised on cement or soil lot and are not confined to pens or stalls	Used by small to mid-sized operations
Pasture with hut or no building	Pigs are raised on natural pasture land and are not confined to pens or stalls	Traditional method of raising hogs. Currently used only at small operations

[a] These are the main facility configurations contained in the Swine ’95 Survey conducted by USDA, 1995

Farrowing operations require intense management to reduce piglet mortality. Houses will have farrowing pens (5 feet by 7 feet typically), and the piglets are provided a protected area of about 8 square feet. Nursery systems are typically designed to provide a clean, warm, dry, and draft-free environment in which animal stress is minimized to promote rapid growth and reduce injury and mortality. Nursery buildings are cleaned and disinfected thoroughly between groups of pigs to prevent transmission of disease from one herd to another. Finishing pigs require less intensive management and can tolerate greater variations in environmental conditions without incurring health problems. Finishing operations allow about 6 square feet per pig.

A typical confinement building is 40 feet by 300 to 500 feet. The buildings are either totally enclosed or open-sided with curtains. Totally enclosed facilities are mechanically ventilated throughout the year. Open-sided buildings are naturally ventilated during warm weather and mechanically ventilated during cold weather when curtains are closed. Swine

houses have an integrated manure collection system as described in the next section. As shown in Table 5-6, smaller facilities tend to use open buildings.

Table 5-6.

Housing Frequency in 1995 (Percent of Farms)

Swine Production Phase	Size	Housing Type	USDA APHIS Region[a]		
			Midwest	North	Southeast
Farrowing	<5000 hogs marketed	Total confinement	22.6	53.1	56
		Open building; no outside access	13.1	8.0	8.8
		Open building; outside access	25.7	33.8	31.2
		Lot	16.2	3.2	1.1
		Pasture	22.4	1.9	2.8
	>5000 hogs marketed	Total confinement	98.3	100	100
Nursery	<5000 hogs marketed	Total confinement	52.3	55.4	62
		Open building; no outside access	9.1	11.5	8.8
		Open building; outside access	27.7	33.8	31.2
		Lot	7.0	Not available	3.7
	>5000 hogs marketed	Total confinement	99	100	96.4
Finishing	<5000 hogs marketed	Total confinement	19.9	36.5	23.4
		Open building; no outside access	15.4	14.1	9.5
		Open building; outside access	24.5	42.1	55.9
		Lot	17.1	4.6	9.3
		Pasture	23.0	2.5	1.9
	>5000 hogs marketed	Total confinement	96.8	95.5	83.9

[a] Midwest=SD, NE, MN, IA, IL; North=WI, MI, IN, OH, PA; Southeast=MO, KY, TN, NC, GA
USDA, 1995

5.4 Swine Manure Management Practices

Although use of open lots for swine production still occurs, this method of confinement generally is limited to small operations. Swine manure produced in open lots is handled as a solid in similar fashion as at beef cattle feedlots and dairy cattle drylots. In enclosed confinement facilities, swine manure is handled as either a slurry or a liquid.

There are four principal types of waste management systems used with total and partially enclosed confinement housing in the swine industry: deep pit, pull-plug pit, pit recharge, and flush systems. The deep pit, pull-plug pit, and pit recharge systems are used with slatted floors whereas flush systems can be used with either solid or slatted floors. Brief descriptions of these management systems are presented below. These practices do not represent all of the practices in use today; however, they are the predominant practices currently used by swine operations.

5.4.1 Collection Practices

Flush Systems. Flush systems utilize either fresh water or, more commonly, supernatant from an anaerobic lagoon to transport accumulated wastes to an anaerobic lagoon. Flush frequency can be daily or as frequently as a every two hours. Frequency depends on flushed channel length and slope and volume of water used per flush. Because pigs will defecate as far away as possible from their feeding and resting areas, facilities with solid floors usually will have a flush channel formed in that area. With slatted floors, there usually are a series of parallel flush channels formed in the shallow pit under the slats. Methane emissions from flushed swine confinement facilities will be low but ammonia, hydrogen sulfide, and VOC emissions may be higher than from pit recharge and pull-plug pit systems due to turbulence during flushing.

Pit Recharge. Pit recharge systems utilize relatively shallow pits that are drained periodically by gravity to an anaerobic lagoon. The frequency of draining varies but between four and seven days is standard. Pit recharge systems generally use 16 to 18 inch deep pits located under slatted floors. Previously, 24-inch deep pits were preferred, but now shallower pits are used. Following draining, the empty pit is partially refilled with water, typically with supernatant from the anaerobic lagoon. Generally, about six to eight inches of water is added. With pit recharge systems, emissions of ammonia, hydrogen sulfide, methane and VOC from the confinement facility will be lower than those with deep pits. However, if the manure is sent to an anaerobic lagoon, facility-wide emissions of ammonia, hydrogen sulfide, and methane from pit recharge may be greater than those from deep pits.

Pull-Plug Pits. Pull-plug pits are similar to pit recharge in that pit contents are drained by gravity to a storage or stabilization system. Pits are drained about every one to two weeks. However, water is not added back into the pit. The system relies on the natural moisture in the manure. Manure drained from pull-plug pits may be discharged to a manure storage tank or earthen storage pond or an anaerobic lagoon for stabilization and storage. Gaseous emissions from confinement facilities with pull-plug pits will be similar in magnitude to those with pit recharge systems.

Deep Pit Storage. Deep pits normally are sized to collect and store six months of waste in a pit located directly under a slatted flooring system. Accumulated manure is emptied by pumping. The accumulated manure may be directly applied to land or transferred either to storage tanks or earthen storage ponds for land application later. Due to the relatively high total solids (dry matter) concentration in swine manure collected and stored in deep pits, irrigation is not an option for disposal. To reduce odor, ammonia, and hydrogen sulfide concentrations in confinement facilities with deep pits, ventilation air may flow through the animal confinement area, down through the slatted floor, and over the accumulated manure before discharge from the building. Alternatively, deep pits may be ventilated separately. In either case, emissions of ammonia, hydrogen sulfide, methane, and VOC from confinement facilities with deep pits at least theoretically should be higher than from facilities with other types of manure collection and storage systems.

5.4.2 Swine Manure Storage and Stabilization

Most large hog farms have from 90 to 365 days of manure storage capacity (NPPC, 1996). Storage is in either an anaerobic lagoon or a storage facility. Typical storage facilities include deep pits, tanks, and earthen ponds. Anaerobic lagoons provide both manure stabilization and storage. The use of storage tanks and ponds generally is limited to operations with deep pits and pull-plug pits where manure is handled as a slurry. Pit recharge and flush systems typically use anaerobic lagoons, because of the need for supernatant for use as recharge or flush water. Anaerobic lagoons emit less VOC and noxious odors than storage facilities, but emit more methane.

Storage facilities and anaerobic lagoons are operated differently. Storage facilities hold manure until the vessel is full and then are fully emptied at the next available opportunity. To maintain proper microbial balance, lagoons are never fully emptied, are sized for a design manure acceptance rate, and are emptied on a schedule. This section describes the types of lagoons and storage facilities used and the factors affecting their design.

Anaerobic Lagoons

The anaerobic lagoon has emerged as the overwhelmingly predominant method used for the stabilization and storage of liquid swine manure. Methods of aerobic stabilization (e.g.,

oxidation ditches or aerated lagoons) were abandoned many years ago due to high electricity costs and operational problems such as foaming.

Several factors have contributed to the use of anaerobic lagoons for swine waste management. One is the ability to handle the manure as a liquid and use irrigation for land application. A second is the potential to reduce noxious odors by maximizing the complete reduction of complex organic compounds to methane and carbon dioxide, which are odorless gases. Finally, the use of anaerobic lagoons in the swine industry was driven, in part, by the potential to maximize nitrogen losses through ammonia volatilization thereby reducing land requirements for ultimate disposal. With the shift to phosphorus as the basis for determining acceptable land application rates for animal manures, maximizing nitrogen loss is ceasing to be an advantage.

The design and operation of anaerobic lagoons for swine and other animal manure has the objective of maintaining stable populations of the microorganisms responsible for the reduction of complex organic compounds to methane and carbon dioxide. As discussed in Chapter 2, the microbial reduction of complex organic compounds to methane and carbon dioxide is a two-step process, in which a variety VOC are formed as intermediates. Many of these VOC, such butyric acid, are sources of noxious odors when not reduced further to methane. Methanogenic microorganisms have slower growth rates than the microbes responsible for the formation of VOC. Therefore, anaerobic lagoons must be designed and operated to maintain a balance between the populations of these microorganisms and methanogens to avoid accumulations of VOC and releases of associated noxious odors.

Emissions of methane and VOC from anaerobic lagoons vary seasonally. Since reaction rates of all microbial processes are temperature dependent, microbial activity decreases as the temperature approaches freezing. Therefore, emissions can be very low during winter. Where there is significant seasonal variation in lagoon water temperature, an imbalance in the microorganisms will occur in late spring and early summer, leading to high VOC emissions and associated odors. This variation is unavoidable and the severity depends on seasonal temperature extremes.

Storage Facilities

Storage facilities include deep pits (beneath confinement buildings), in-ground tanks, above-ground tanks, and earthen ponds. Most storage facilities are open to the atmosphere.

Manure storage tanks and earthen ponds not only must have adequate capacity to store the manure produced during the storage period but also any process wastewaters or runoff that require storage. In addition, provision for storage of the volume of settled solids that will accumulate for the period between solids removal is necessary. Due to the size of storage structures for liquid and slurry type manures, it is difficult to completely mix and empty these facilities during draw down at the end of each storage period. Thus, an accumulation of settled solids will occur requiring a complete clean out of the facility periodically. Estimates of rates of settled solids accumulation for various manures can be found in the Agricultural Waste Management Field Handbook (USDA, 1992).

The microbial processes responsible for methane and VOC formation also occur in storage tanks and ponds. However, the necessary balance in microbial populations for the complete reduction of organic carbon to methane and carbon dioxide never is established due to higher organic loading rates and accumulations of high concentrations of VOC, which inhibit methane formation. Thus, emissions of methane from manure storage tanks and ponds will be lower than at anaerobic lagoons, and emissions of VOC will be higher. Rates of formation of ammonia and hydrogen sulfide will not differ, but emission rates may differ depending on hydraulic retention time, pH and the area of the liquid-atmosphere interface. The pH of storage facilities normally will be acidic due to the accumulation of organic acid, which will reduce the rate of ammonia emission but increase the rate of hydrogen sulfide emission. The reverse is true for anaerobic lagoons, which have pH values that typically are slightly above neutral. However, time and surface area probably are the more significant variables controlling the masses of ammonia and hydrogen sulfide emitted.

Anaerobic Lagoon Design

Both single cell and two cell systems are used for the stabilization and storage of swine manure. In single cell systems, stabilization and storage are combined. In a two-cell system, the first cell has a constant volume and provides stabilization while the second cell provides storage. With two cell systems, water for pit recharge or flushing is withdrawn from the second cell. In climates with low precipitation and high evaporation rates, there may be one or more additional cells for the ultimate disposal of excess liquid by evaporation. Anaerobic lagoons use bacterial digestion to decompose organic carbon into methane, carbon dioxide, water, and residual solids. Periodic removal of settled solids will be necessary. Typically, lagoons are dredged every 10 to 15 years, and the sludge is applied to land.

The design of lagoon treatment cells is similar to storage ponds with one exception. Lagoons are never completely emptied, except when accumulated solids are removed. Lagoons require permanent retention of what is known as the minimum treatment volume that should be reflected in design. Thus, lagoons must be larger in total volume than ponds that provide storage for the same volume of manure.

Determination of minimum treatment volume for lagoons is based on Natural Resources Conservation Services recommended total volatile solids (TVS) loading rates and the daily TVS loading to the lagoon. For anaerobic lagoons, recommended rates range from 3 lb TVS per 1,000 ft^3 per day in northern parts of Montana and North Dakota to 12 lb TVS per 1,000 ft^3 per day in Puerto Rico and Hawaii. This is a reflection of the effect of temperature on the rate of microbial activity. The calculation of minimum treatment volume is simply the daily TVS loading to the lagoon divided by the recommended TVS loading rate for the geographical location of the lagoon (USDA, 1992).

With open manure storage tanks, ponds, and lagoons, provision also is necessary to store the accumulation of normal precipitation directly falling into the structure less evaporation during the storage period. The storage requirement for normal precipitation less evaporation varies geographically. In addition, there are provisions for storage of precipitation from a

25-year, 24-hour storm event, which also varies geographically, with a minimum of one foot of free board remaining. Design values used for the accumulation of normal precipitation less evaporation are based on mean monthly precipitation values for the location of the storage facility obtained from the National Oceanic and Atmospheric Administration.

In some situations, manure storage ponds or lagoons also may be used for the storage of runoff captured from open confinement areas. In these situations, provision for storage of runoff collected from normal precipitation during the storage period as well as from a 25-year, 24-hour storm event must be included in the design storage capacity of the pond. Expected annual and monthly runoff values for the continental U.S., expressed as percentages of normal precipitation, for paved and unpaved open lots can be found in the Agricultural Waste Management Field Handbook (USDA, 1992).

Regional Differences in Manure Management Systems

There are regional differences in methods of swine manure management driven primarily by climate but also influenced by size of operation. For example, small operations with less than 500 head of confinement capacity commonly use drylots that are scraped periodically for manure removal. Manure storage is rare, but there may be a runoff collection and storage pond that also may be used for storage of any confinement facility wash water. Operations with greater than 500 head of confinement capacity typically will use one of the management systems described above. As confinement capacity increases, the probability that either a pull-plug pit or flush system with an anaerobic lagoon will be used also increases.

However, there still are regional differences even among operations with greater than 1,000 head confinement capacity. For example, use of flushing generally is limited to the Central and Southern Regions of the U.S. because freezing of flush water is not a problem, and use of deep pits generally is limited to the Mid-Atlantic, Midwest, and Pacific regions (Table 5-7). In contrast, pit recharge systems are used in all regions. The data base used to create Table 5-7 did not include frequency of use of pull-plug pits. However, pull-plug pits generally are used primarily in climates where winter temperatures severely impact anaerobic lagoon performance.

Table 5-7.

Frequency (in percent) of Operations in 1995 that Used Certain Manure Storage Systems for Operations that Marketed 5,000 or More Hogs in a Twelve Month Period (Percent of Farms)

Manure Storage System	USDA APHIS Region[a]		
	Midwest	North	Southeast
Deep pit storage	21.5	28.5	85.7
Above ground storage	NA	NA	27.2
Below ground storage	NA	NA	43.3
Anaerobic lagoon	91.2	4.8	33.3
Aerated lagoon	NA	b	NA
Solids separated from liquids	NA	NA	14.4

[a] Midwest=SD, NE, MN, IA, IL; North=WI, MI, IN, OH, PA; Southeast=MO, KY, TN, NC, GA
[b] Aerated lagoons were reported on 70% of the operations. The standard error of the data as reported by NAHMS exceeds 21% and therefore was determined by NAHMS not to be statistically valid.
USDA, 1995

5.4.3 Swine Manure Land Application

Essentially all swine manure is disposed of by application to cropland. Manure from deep pits and pull-plug pits typically is surface applied and may be incorporated by disking or plowing. Subsurface injection also may be used but is a less common practice. Incorporation following application and injection are used most commonly when odors from land application sites are a concern. Irrigation is the most common method of disposal of supernatant from anaerobic lagoons. In arid areas, evaporation is another option for disposal of lagoon liquids. Methods of swine manure disposal by USDA region are summarized in Table 5-8.

5.4.4 Swine Mortality

A variety of methods are used for the disposal of mortalities in the swine industry (Table 5-9). Commonly used methods for disposal of young pig carcasses are burial, composting, and incineration. However, burial is becoming less common because of water

Table 5-8.

Method of Manure Application on Land in 1995

Variable	Size	USDA APHIS Region[a]		
		Midwest	North	Southeast
Irrigation	<5000 hogs marketed	47.6	11.2	2.9
Broadcast		18.4	57.8	69.0
Slurry-surface		33.0	55.7	46.6
Slurry subsurface		NA	26.6	22.9
Irrigation	>5000 hogs marketed	100	74.8	16.4
Broadcast		NA	NA	39.4
Slurry-surface		NA	6.3	68.1
Slurry subsurface		NA	23.6	72.1

a Midwest=SD, NE, MN, IA, IL; North=WI, MI, IN, OH, PA; Southeast=MO, KY, TN, NC, GA
USDA, 1995.
Note: Swine farms use more than one method of disposal, totals will add to more than 100%.

Table 5-9.

Method of Mortality Disposal

Method of disposal	Size	USDA APHIS Region[a]		
		Midwest	North	Southeast
Burial on operation	<2500 hogs marketed	73.2	71.6	46.6
Burn on operation		9.1	7.2	15.2
Renderer entering operation		2.1	14.1	38.7
Renderer at perimeter of operation		2.7	4.2	8.7
Composting	>2500 hogs marketed	10.3	6.4	13.0
Other		7.0	9.8	6.8
Burial on operation		23	21	20.8
Burn on operation		9.9	10.2	17.1
Renderer entering operation		39.9	50.1	37.5
Renderer at perimeter of operation		27.9	23.2	31.4
Composting		NA	NA	11.1
Other		3.4	NA	1.8

[a] Midwest=SD, NE, MN, IA, IL; North=WI, MI, IN, OH, PA; Southeast=MO, KY, TN, NC, GA
USDA, 1995

quality concerns and is being replaced primarily by composting. Incineration is more expensive due to equipment and fuel costs, but requires less labor. Carcass composting is a mixed aerobic and anaerobic process, and therefore is a source of those gaseous compound emissions associated aerobic and anaerobic microbial decomposition of organic matter. Land application is used for the disposal of composted carcasses. Larger animals usually are disposed of off-site by rendering although they also may be buried or composted.

5.5 Swine Model Farms

Four basic model farms were identified for swine. These models represent grow-finish operations. The components of the model farms include the confinement houses, manure storage facilities (anaerobic lagoons, external storages, or pit storages), and land application. The four models represent the most common manure collection methods: flush, pit-recharge, pull-plug pit, and pit storage (S1, S2, S3, and S4). For the pull-plug pit model, two variations were developed to account for different manure storage practices (S3A and S3B). The four swine model farms differ in the type of manure management systems in the confinement area and the method of storage.

Swine Models

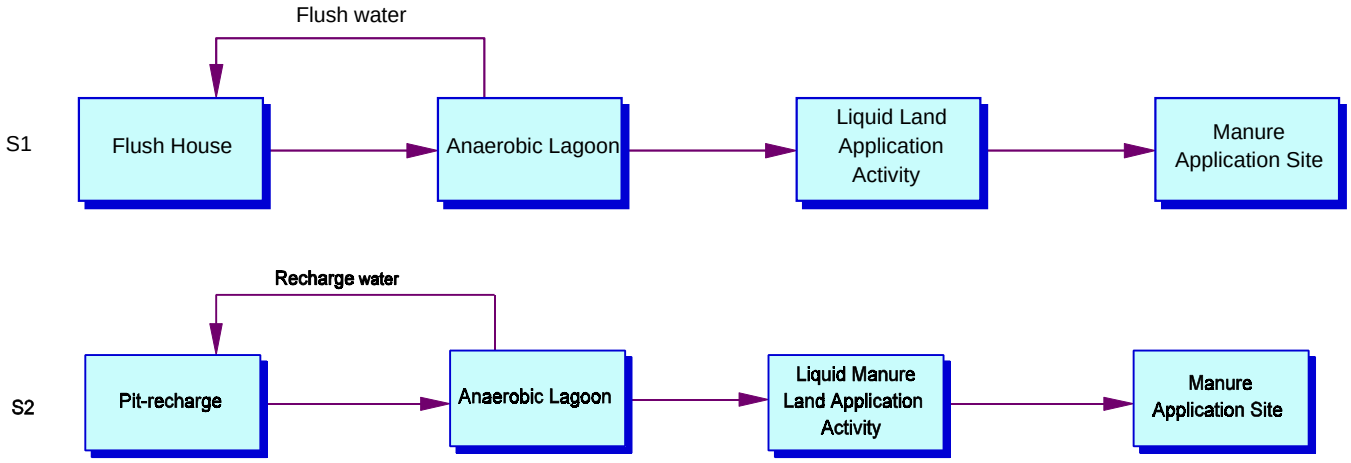

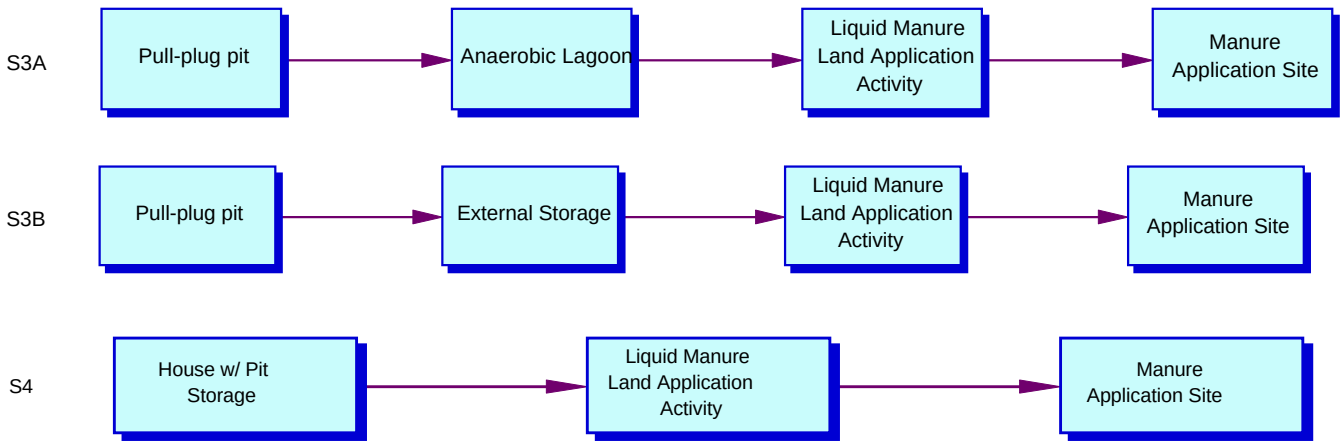

5.5.1 Confinement

Swine are kept in confinement buildings, usually with slatted floors to separate the manure from the animals. The manure falls through the slats where it is stored for a period of time. Periodically, manure is removed to a storage/stabilization site. The time that the manure is stored in the confinement house depends on the type of manure management system. For storage pits, the storage time varies from several days to several months. For flush systems, manure is removed several times a day. The model swine farms that were developed are differentiated by their manure management systems, which are flush house (S1), pit recharge (S2), pull-plug pit (S3A and S3B), and pit storage (S4). The models with pit storage are sources of emissions of ammonia, hydrogen sulfide, methane, and VOC. The flush house model emits ammonia and hydrogen sulfide. All models emit particulate matter from feed and swine dander.

5.5.2 Storage and Stabilization

In model farms S1 and S2, manure is sent to an anaerobic lagoon. Two types of lagoon systems were considered: (1) an anaerobic lagoon (sometimes referred to as a combined lagoon and storage pond or one-cell lagoon), or (2) an anaerobic lagoon followed by a separate storage pond (two-cell lagoon). Review of industry practices indicated that the one-cell anaerobic lagoon was the most commonly used method. Additionally, a review of emission mechanisms and existing emission data indicated that total emissions would not be substantially different between

the one-cell and two-cell systems. Therefore, the model farms only include an anaerobic lagoon. The supernatant from the lagoon is used as flush water or pit recharge water.

In the pull-plug pit model farms, the manure is either sent to an anaerobic lagoon (S3A) or to external storage (S3B). For the pit storage model (S4) manure is sent directly from the confinement facility (i.e., pit storage) to be land applied.

5.5.3 Land Application

Land application includes the manure application activity and the manure application site (i.e., cropland or other agricultural land). All manure from the swine model farm is land applied in a liquid form. Three types of liquid land application activities were considered in developing the model farms; land application by: (1) liquid surface spreader, (2) liquid injection manure spreader, or (3) irrigation. Information was not available to estimate or differentiate emissions from the three activities. Therefore, the model farms do not distinguish among methods of liquid land application.

5.6 References

NPPC. 1996. Swine Care Handbook. National Pork Producers Council, Des Moines, Iowa.

USDA. 1995. Swine ’95 Part 1: Reference of 1995 Swine Management Practices. U.S. Department of Agriculture (USDA), Animal and Plant Health Inspection Service (APHIS). Fort Collins, Colorado.

USDA. 1999a. 1997 Census of Agriculture. U.S. Department of Agriculture (USDA), National Agricultural Statistics Service (NASS). Washington, D.C.

USDA. 1999b. Hogs and Pigs: Final Estimates 1993-1997. Statistical Bulletin 951. U.S. Department of Agriculture (USDA), National Agricultural Statistics Service (NASS). Washington, D.C.

USDA. 1992. Agricultural Waste Management Field Handbook, National Engineering Handbook, Part 651. U.S. Department of Agriculture (USDA), Natural Resources Conservation Service (NRCS), Washington, D.C.

USEPA. 2001. Development Document for the Proposed Revisions to the National Pollutant Discharge Elimination System Regulation and the Effluent Guidelines for Concentrated Animal Feeding Operations. EPA-821-R-01-003. U.S. Environmental Protection Agency, Office of Water, Washington, D.C.

6.0 POULTRY FEEDING OPERATIONS

The poultry industry encompasses several subsectors, including broilers, layers, turkeys, ducks, geese, and game fowl. This report focuses only on the broilers, layers, and turkeys, which accounted for more than 99 percent of the annual farm receipts from the sale of poultry in 1997 (USDA, 1998a). Broilers accounted for approximately 65 percent of poultry sales, with sales of eggs and turkeys accounting for 21 percent and 13 percent, respectively (USDA, 1998b).

Up until the 1950s most of the nation's poultry was produced on small family farms in the Midwestern United States. Midwestern States provided favorable climatic conditions for seasonal production of poultry and close proximity to major sources of grain feed. With the advent of controlled environment housing facilities, poultry production ceased to be a seasonal activity. With the improvement of the transportation and distribution systems, the poultry industry eventually expanded from the Midwest to other regions. By 1997, the value of poultry production exceeded $21.6 billion, and much of the poultry output was generated on large facilities with confinement capacities in excess of 100,000 birds (USDA, 1998a).

Poultry production (especially broiler production) is a highly vertically integrated industry and as a result management strategies at the facility level tend to be more uniform than in other sectors of AFOs. More than 90 percent of all chickens raised for human consumption in the U.S. are produced by growers working under contract with integrators. Under contract, the integrators provide the growers with birds, feed, medicines, transportation, and technical help. The contract growers provide the labor and the production facilities to grow the birds from hatchlings to market age and receive a minimum guaranteed price for the birds moved for slaughter. The contract growers are responsible for disposal of manure and animal carcasses.

6.1 Broilers

Broiler production refers to the raising of chicken for meat. A broiler is a young chicken of either sex that is characterized as having tender meat, flexible breastbone cartilage and soft pliable, smooth-textured skin.

6.1.1 Size and Location of the Broiler Industry

In 1997, 23,937 broiler operations produced 6.7 billion broilers. The consolidation of the broiler industry from small, family-run to large operations began earlier than other poultry and livestock sectors, and was well entrenched by the 1970s. Table 6-1 illustrates the trend. Between 1982 and 1992, more than 6,000 broiler operations (20 percent of the industry's producers), went out of business. During this period, total broiler production increased by 50 percent, with new, larger operations becoming more predominant. Between 1992 and 1997, the number of operations stabilized, but production increased 24 percent from 5.4 billion broilers to 6.7 billion broilers.

Table 6-1.

Broiler Operations and Production in the United States[a]

Year	Operations	Production
1982	30,100	3,516,095,408
1987	27,645	4,361,198,301
1992	23,949	5,427,532,921
1997	23,937	6,741,476,153

[a]USDA, 1998a, 1998c

Larger operations dominate broiler production. In 1997, most operations had a confinement capacity of 90,900 birds or less, as shown in Table 6-2. The confinement capacity was estimated from 1997 sales, assuming 5.5 flock turnovers per year. Operations with more than 90,900 birds of confinement capacity represented only 11 percent of the total number of broiler operations, but accounted for nearly half the annual production. Smaller operations with fewer than 10,900 birds confinement capacity accounted for nearly 78 percent of the broiler operations, but less than 30 percent of the annual production (USDA, 1999a).

In addition to being dominated by large producers, the broiler industry is concentrated in several states. Georgia, Arkansas, and Alabama are some of the largest broiler producing states

Table 6-2.

Number of Broiler Operations by Size in 1997

STATE	CONFINEMENT CAPACITY			
	<10,900 Birds	10,900 - 90,900 Birds	>90,900 Birds	
ALABAMA	90	1885	502	
ALASKA	9	0	0	
ARIZONA	19	1	0	
ARKANSAS	262	2974	414	
CALIFORNIA	137	36	67	
COLORADO	74	0	0	
CONNECTICUT	28	2	0	
DELAWARE	37	687	81	
FLORIDA	55	191	75	
GEORGIA	82	1475	688	
HAWAII	6	3	0	
IDAHO	55	0	0	
ILLINOIS	114	1	0	
INDIANA	153	48	3	
IOWA	490	28	1	
KANSAS	93	0	0	
KENTUCKY	44	119	80	
LOUISIANA	29	215	75	
MAINE	71	2	0	
MARYLAND	117	777	103	
MASSACHUSETTS	40	1	0	
MICHIGAN	334	2	0	
MINNESOTA	520	95	6	
MISSISSIPPI	66	928	399	
MISSOURI	132	180	139	
MONTANA	61	0	0	
NEBRASKA	224	0	1	
NEVADA	6	0	0	
NEW HAMPSHIRE	33	2	0	
NEW JERSEY	79	0	0	
NEW MEXICO	11	0	0	
NEW YORK	165	7	0	
NORTH CAROLINA	141	1670	275	
NORTH DAKOTA	82	1	0	
OHIO	308	178	10	
OKLAHOMA	93	476	63	
OREGON	109	33	14	
PENNSYLVANIA	421	374	50	
RHODE ISLAND	4	1	0	
SOUTH CAROLINA	32	218	116	
SOUTH DAKOTA	91	1	0	
TENNESSEE	91	402	55	
TEXAS	259	483	258	
UTAH	19	0	0	
VERMONT	57	0	0	
VIRGINIA	59	467	145	
WASHINGTON	104	36	22	
WEST VIRGINIA	37	85	64	
WISCONSIN	529	38	20	
WYOMING	17	-	0	
UNITED STATES	**6,089**	**14,122**	**3,726**	**23,937**

USDA, 1999a

followed by Mississippi, North Carolina, and Texas. Table 6-3 shows the broiler population by state.

6.1.2 Broiler Production Cycles

The production cycle of broilers is divided into two phases: brooding and grow-out. The brooding phase begins when day-old chicks are placed in a heated section of a broiler house known as the brood chamber. The brood chamber is maintained at over 100°F when the birds are a day or two old. During the birds' first few weeks of growth, the temperature of the brood chamber is gradually decreased. Once the birds need floor space, the remainder of the house is opened and the chicks fed out to market weight.

The length of the grow-out phase ranges from 28 to 63 days, depending on the size of the bird desired. Broilers are produced to meet specific requirements of the customer, which can be a retail grocery store, fast-food chain, or institutional buyer. For broilers, the typical grow-out period is 49 days, resulting in a average weight of 4.5 to 5.5 pounds. The grow-out period may be as short as about 28 days to produce a 2.25 to 2.5 pound bird, commonly referred to as a Cornish game hen. For producing roasters weighing 6 to 8 pounds, the grow-out period will be up to 63 days. Broiler houses are operated on an "all in-all out" basis and require time for cleaning and repair between flocks. For broilers, five to six flocks per house per year is typical. The number of flocks per year will be lower for roasters and higher for cornish hens. When roasters are produced, females usually are harvested at 49 days of age to provide more floor space per bird to accommodate added weight gain by the males that remain.

Female broilers grown to lay eggs for replacement stock are called broiler breeders and are usually raised on separate farms. These farms produce only eggs for broiler replacements. A typical laying cycle for hens is about 1 year, after which the hens are sold for slaughter.

Table 6-3.

Broiler Inventory by State

STATE	Inventory (1,000 Birds)
ALABAMA	164,764
ALASKA	-
ARIZONA	-
ARKANSAS	211,745
CALIFORNIA	43,145
COLORADO	-
CONNECTICUT	-
DELAWARE	46,709
FLORIDA	24,073
GEORGIA	215,055
HAWAII	182
IDAHO	-
ILLINOIS	-
INDIANA	-
IOWA	-
KANSAS	-
KENTUCKY	20,109
LOUISIANA	-
MAINE	-
MARYLAND	53,691
MASSACHUSETTS	-
MICHIGAN	116
MINNESOTA	8,418
MISSISSIPPI	130,964
MISSOURI	45,455
MONTANA	-
NEBRASKA	291
NEVADA	-
NEW HAMPSHIRE	-
NEW JERSEY	-
NEW MEXICO	-
NEW YORK	255
NORTH CAROLINA	120,909
NORTH DAKOTA	-
OHIO	8,327
OKLAHOMA	35,891
OREGON	3,945
PENNSYLVANIA	24,582
RHODE ISLAND	-
SOUTH CAROLINA	33,236
SOUTH DAKOTA	-
TENNESSEE	25,200
TEXAS	82,745
UTAH	-
VERMONT	-
VIRGINIA	47,164
WASHINGTON	7,055
WEST VIRGINIA	16,509
WISCONSIN	5,982
WYOMING	-
OTHER	35,156
UNITED STATES	**1,411,673**

USDA, 1998b

6.1.3 Broiler Confinement

The most common type of housing for broilers, roasters, and breeding stock is enclosed housing with a compacted soil floor covered with dry bedding. Dry bedding (litter) can be sawdust, wood shavings, rice hulls, chopped straw, peanut hulls, or other products, depending on availability and cost. Manure as excreted by birds has a high water content. The litter absorbs moisture excreted by the birds.

Mechanical ventilation is typically provided using a negative-pressure system, with exhaust fans drawing air out of the house, and fresh air returning through ducts around the perimeter of the roof. The ventilation system uses exhaust fans to remove moisture and noxious gases during the winter season and excess heat during the summer. Advanced systems use thermostats and timers to control exhaust fans. Many houses have side curtains that are opened in warm weather for natural ventilation.

Broilers and Roasters. Houses for broilers and roasters are usually 40 feet wide and 400 to 500 feet long and typically designed for 25,000 to 30,000 broilers per flock.

Broiler Breeders. Houses are usually 40 to 45 feet wide and 300 to 600 feet long. Most of the breeder houses contain wooden slats elevated 18 to 24 inches and laid across supports for the birds to roost. The slats are spaced 1 inch apart, which allows most of the manure produced by the birds to fall beneath the slat area, keeping the area accessible to the birds cleaner. Drinkers, mechanical feeders, and nests are placed over the slats. The slats cover two-thirds of the area of the house, running along the outside walls, with the center corridor containing bedding litter. The center corridor is covered with 2 to 6 inches of bedding before young breeder layers are placed in the breeder house. Equipment can access the center section of the house to aid in clean-out between flocks.

6.1.4 Broiler Manure Management

A typical broiler house with capacity for 22,000 birds at a time will produce 120 tons of litter per year (NCC, 1999). Two kinds of manure are removed from broiler houses: litter and cake. Litter is a mixture of bedding and manure. Cake is a compacted and concentrated mixture

of manure and litter that usually builds up on the surface of the litter around waterers and feeders, where much of the manure is deposited.

6.1.4.1 Broiler Manure Collection

Broiler houses are partially cleaned between flocks to remove cake and fully cleaned out less often. The remaining litter may be "top dressed" with an inch or so of new bedding material. The litter (bedding and manure) is typically completely cleaned out annually, although there is a trend toward performing complete clean-outs less often. When the broiler house is completely cleaned out, the litter is typically removed with a front-end loader.

A broiler breeder house is cleaned after the hens have finished the lay cycle, which is typically about one year. When the house is cleaned, the equipment (including slats) is removed from the house to allow a front-end loader to push all of the manure to the center litter section of the house. Then the front-end loader places the mixture of manure and litter into a spreader for land application. A thorough cleaning after each flock removes pathogens that could be transferred to the next flock. After removal of all organic matter, the house is disinfected.

Factors that affect emissions from broiler houses include the moisture content of the manure, time the manure is present in the broiler house, and the ventilation rate. The moisture content will affect the volatilization of compounds that are soluble in water, such as ammonia, hydrogen sulfide, and volatile organic compounds. The more moisture present the more likely these compounds will be emitted. Manure as excreted by the birds has a high water content, most of which evaporates, emitting ammonia as the manure dries out. Since broiler manure storage is integrated with the broiler house, ammonia emissions continue throughout the year. The ventilation rate affects the amount of ammonia and particulate matter carried out of the broiler house. During the growth of the flock, continuous air flow removes ammonia and other gases reducing the moisture content of the litter over that of freshly excreted manure. Another result of continuous air flow is a lower nitrogen content of the litter (manure and bedding).

6.1.4.2 Broiler Manure Storage

Once broiler manure has been collected, it is either immediately applied to cropland or stored for later land application. Because cake removal occurs after each grow-out cycle, cake storage is a necessity. Traditionally, cake from broiler production facilities has been stored in uncovered stockpiles until conditions permitted land application. However, water quality concerns have led to the increased use of storage structures known as litter sheds for cake storage. Litter sheds typically are partially enclosed pole type structures. Water quality concerns also have led to the recommendation that cake not stored in litter sheds be placed in well-drained areas and covered to prevent contaminated runoff and leaching. However, covering of stockpiles of cake is rare. Because of the larger volume involved, broiler manure and litter from a total facility clean-out is usually stored in open or covered stockpiles if immediate land application is not possible. Because of cost, litter sheds generally are sized only to provide capacity for cake storage. To avoid long-term storage of broiler manure and litter in stockpiles, the timing of total facility clean-outs gradually is shifting to early and mid-spring.

Factors that affect emissions from broiler litter storage are moisture content and length of storage. High moisture content will lead to the development of anaerobic conditions and the production of hydrogen sulfide and other reduced sulfur compounds, VOC, and methane and will facilitate the further mineralization of organic nitrogen to ammonia. As the time of storage increases, the opportunity for the generation and emission of these compounds increases. Open stock piles of litter can be intermittent sources of particulate matter emissions if the surface layer of the stored litter is sufficiently dry. Thus, frequency of precipitation events and evaporation rates as well as wind speed are important variables. In litter sheds, protection from precipitation increases the probability of particulate matter emission, and partial protection from wind decreases the probability.

6.1.5 Mortality Management

With broilers, the highest rate of mortality normally occurs during the first two weeks of the grow-out cycle but continues at a lesser rate throughout the rest of the cycle. Typically, about

four to five percent of the birds housed will die during the grow-out cycle. To prevent the possible spread of disease, dead birds must be removed at least daily if not more frequently. Several options are available for dead bird disposal. Of these options, composting is one of the more desirable approaches and has been promoted heavily by the broiler industry. As an alternative to composting or burial, at least one integrator has been distributing freezers to preserve carcasses for subsequent disposal by rendering.

Carcass composting is an aerobic process using oxygen, bacteria, and heat to reduce the volume and weight of bird carcasses. The birds are placed in the composting bins, piles, or elongated piles called windrows within 24 hours of death and covered with appropriate composting material. The mixture generates heat and rapidly decays the dead birds into a product suitable for land application. Carcass composting is very popular in areas where birds cannot be taken to rendering. The finished compost is suitable for disposal by land application without attracting scavengers and other vermin.

Catastrophic losses of broiler chickens also occur especially during periods of extremely hot weather, but also because of weather events such as hurricanes, tornadoes, and snow or ice storms. Catastrophic losses of broilers from excessive heat usually are more severe with older birds. There also are several options for disposal of catastrophic losses with burial being the most commonly used practice. Large-scale composting is another, and probably more desirable option from a water quality perspective.

6.2 Laying Hens

Laying hens or layers are sexually mature female chickens maintained for the production of eggs, primarily for human consumption. These eggs are known as table eggs and may be sold as shell eggs (table eggs), or may be used in the production of liquid, frozen, or dehydrated eggs. Fertile eggs also are produced for hatching to provide broiler and laying hen chicks, but such production occurs in a relatively small number of specialized operations that were not included in the scope of this study.

6.2.1 Size and Location of the Table Egg Industry

Trends in the egg industry have paralleled those in other livestock industries – increasing overall production on fewer and larger farms. Table 6-4 illustrates the degree of consolidation that has occurred the industry in the last 15 years. In 1982, there were 212,000 operations with mature hens in the United States. Between 1982 and 1997, the number of operations dropped by 69 percent, while the number of hens increased slightly from 310 to 313 million. Overall, table egg production has not increased as rapidly as has broiler production.

Table 6-4.

Layer Operations and Production in the United States

Year	Number of Operations	Inventory (Number of Layers 20 Weeks and Older)
1982	212,608	310,515,367
1987	141,880	316,503,065
1992	86,245	301,467,288
1997	69,761	313,851,480

USDA, 1999a

Table 6-5 shows the number of layer operations by size in 1997. The size distribution is based on the inventory of layers that are 20 weeks or older (i.e., excluding immature birds), and excludes farms that raise only pullets. Ninety-eight percent of the table egg operations in 1997 housed less than 20,000 birds. Although the majority of operations are in the small size category, large operations are responsible for a continually increasing larger share of total egg production. Between 1982 and 1992, the average number of hens and pullets on poultry farms increased from 1,460 birds per farm to 3,495 per farm. The 326 largest operations represent less than 0.5 percent of the total number of operations (70,857), but confined over 55 percent of the laying hens (Abt, 1998).

Table 6-5.

Number of Layer Operations by Size in 1997

State	INVENTORY (Layers 20 Weeks or Older)			
	<20,000 Birds	20,000-100,000 Birds	>100,000 Birds	
ALABAMA	1022	108	16	
ALASKA	63	0	0	
ARIZONA	367	0	1	
ARKANSAS	1455	182	6	
CALIFORNIA	2541	62	67	
COLORADO	1568	4	5	
CONNECTICUT	363	10	4	
DELAWARE	83	3	0	
FLORIDA	1104	37	16	
GEORGIA	903	191	28	
HAWAII	129	5	2	
IDAHO	862	1	2	
ILLINOIS	1671	9	7	
INDIANA	1688	59	38	
IOWA	1753	37	41	
KANSAS	1948	13	3	
KENTUCKY	1855	23	4	
LOUISIANA	813	13	2	
MAINE	516	13	3	
MARYLAND	601	8	9	
MASSACHUSETTS	491	4	2	
MICHIGAN	2182	10	13	
MINNESOTA	1833	44	15	
MISSISSIPPI	826	57	2	
MISSOURI	3507	43	9	
MONTANA	1001	0	0	
NEBRASKA	1458	10	8	
NEVADA	200	0	0	
NEW HAMPSHIRE	390	4	0	
NEW JERSEY	808	3	2	
NEW MEXICO	647	2	2	
NEW YORK	1812	20	10	
NORTH CAROLINA	1409	146	11	
NORTH DAKOTA	534	3	0	
OHIO	2958	58	49	
OKLAHOMA	3138	28	3	
OREGON	2193	1	5	
PENNSYLVANIA	2960	117	70	
RHODE ISLAND	91	1	0	
SOUTH CAROLINA	644	37	14	
SOUTH DAKOTA	717	4	4	
TENNESSEE	2504	20	1	
TEXAS	6090	138	31	
UTAH	521	1	5	
VERMONT	499	2	1	
VIRGINIA	1491	22	6	
WASHINGTON	1482	6	16	
WEST VIRGINIA	1073	12	0	
WISCONSIN	2438	12	7	
WYOMING	436	0	0	
UNITED STATES	**67,638**	**1,583**	**540**	**69,761**

USDA, 1999a

Laying operations, although primarily performed in 10 states, are much less geographically concentrated than the broiler industry. States in the Midwest accounted for the largest number of operations, and the large production facilities are fairly evenly spaced throughout the country. Table 6-6 presents the 1997 inventory of layers by state.

6.2.2 Layer Production Cycles

Laying hens reach sexual maturity and begin laying eggs at between 16 and 20 weeks of age, depending on breed. Before the onset of egg production, these birds are referred to as pullets. Pullets that are about to start egg production are known as starter pullets. Some table egg producers raise their own starter pullets and others purchase birds from starter pullet operations. Starter pullet operations may raise birds in facilities like those used for broiler production or in cages like those used for egg producing hens.

Usually laying hens are replaced after about 12 months of egg production when the natural decreasing rate of egg production becomes inadequate to cover feed costs. At this point, laying hens become spent hens and may be slaughtered or rendered to recover any remaining value. Although a second egg production cycle can be obtained from a flock of laying hens following a resting period, this practice is rarely used.

6.2.3 Layer Confinement Practices

Laying hens maintained for table egg production are almost exclusively confined in cages, which allow automation of feed distribution and egg collection. Most confinement facilities for laying hens are mechanically ventilated to remove moisture and carbon dioxide produced by respiration. Exhaust fans draw air into the building through slots located along the perimeter of the roof under the eves. There are several types of cage systems including full and modified stair-step systems. With modified stair-step cage systems, upper cages are partially offset with a baffle diverting manure from upper cages away from lower cages. There also are cage systems that stack cages without any offset to maximize the number of birds per unit floor area.

Table 6-6.
Layer Inventory by State

State	INVENTORY (Number of Layers 20 Weeks or Older)	
	Hens > 1 year	Pullets
ALABAMA	4,292	6,200
ALASKA	0	0
ARIZONA	0	0
ARKANSAS	6,070	8,351
CALIFORNIA	15,270	11,010
COLORADO	1,910	1,760
CONNECTICUT	1,141	2,318
DELAWARE	150	250
FLORIDA	6,216	4,522
GEORGIA	6,680	13,840
HAWAII	465	263
IDAHO	546	385
ILLINOIS	1,534	1,929
INDIANA	10,238	12,076
IOWA	11,655	10,130
KANSAS	505	843
KENTUCKY	1,450	1,650
LOUISIANA	940	963
MAINE	2,256	2,523
MARYLAND	1,518	1,644
MASSACHUSETTS	72	473
MICHIGAN	2,343	2,817
MINNESOTA	6,740	5,215
MISSISSIPPI	2,487	4,424
MISSOURI	3,490	3,605
MONTANA	35	255
NEBRASKA	6,011	3,979
NEVADA	0	0
NEW HAMPSHIRE	53	106
NEW JERSEY	931	1,023
NEW MEXICO	636	536
NEW YORK	1,070	2,400
NORTH CAROLINA	4,307	7,306
NORTH DAKOTA	100	140
OHIO	10,863	16,195
OKLAHOMA	1,909	2,166
OREGON	1,800	1,200
PENNSYLVANIA	9,400	13,605
RHODE ISLAND	10	61
SOUTH CAROLINA	2,205	2,424
SOUTH DAKOTA	800	1,370
TENNESSEE	316	922
TEXAS	5,630	11,545
UTAH	939	759
VERMONT	9	188
VIRGINIA	704	2,759
WASHINGTON	2,815	2,156
WEST VIRGINIA	285	760
WISCONSIN	1,994	1,989
WYOMING	8	4
OTHER	168	132
UNITED STATES	**140,966**	**171,171**

USDA, 1998c

Both one and two story buildings are used to house laying hens. Two story buildings are known as high-rise houses. In a high-rise house, full or modified stair-step cage systems are located in the upper story with manure collected and stored in the lower story of the building. Ventilation fans are located in a sidewall of the manure collection and storage area with air flow passing down through the cages and over the accumulated manure to remove moisture evaporating from the manure. With proper design and management, including prevention of watering system leakage, laying hen manure moisture content can be reduced from 75 percent to as low as 25 to 30 percent.

In single story buildings, full or modified stair systems are located over shallow manure collection pits that may be cleaned either by scraping or flushing. With stacked cage systems, a belt system under the cages collects and removes manure.

When high-rise houses are designed and operated properly, emissions of particulate matter will be higher than from single story houses due to manure drying. Emissions of ammonia also will be higher due to an increased rate of volatilization as moisture evaporates. However, emissions of hydrogen sulfide, VOC, and methane will be lower due to the predominately aerobic microbial environment created by drying. Emissions from scraped and flushed manure collection pits will be similar to deep pit and flush systems for swine with emission factors depending on frequency of scraping or flushing. The frequency of operation of belt systems also will affect emission factors for ammonia, hydrogen sulfide, VOC, and methane. Because laying hen manure in single story houses is handled without any drying, manure particles will be an insignificant component of particulate matter emissions.

6.2.4 Layer Manure Management

Accumulated manure in high-rise houses normally is removed annually during the period between flocks of birds when the house is cleaned and disinfected in preparation for new birds. However, manure can be stored for two or possibly three years. Manure removed from high-rise type houses is directly applied to cropland for disposal.

Scraped pits typically are cleaned at least weekly with the manure either directly applied to cropland or stored in a tank or earthen pond. With belt systems, manure may be removed as frequently as daily and applied directly to cropland or stored for application later. However, removal may be less frequent if partial drying is desired.

As with flush systems for swine and dairy cattle manure, anaerobic lagoons are used for the stabilization of flushed laying hen manure, and supernatant from the lagoon serves as the source of flush water. Both single cell and two cell lagoons are used.

As shown in Table 6-7, there are significant differences regionally in methods of handling laying hen manure. Nationally, the high-rise house is the most commonly used method of handling laying hen manure. The use of flush systems with anaerobic lagoons is limited to the Southeast and West.

Table 6-7.

Primary Manure Handling Method by Region
(Percent of Farms)

Primary Manure Handling Method	Great Lakes	Southeast	Central	West	All Farms
	%	%	%	%	%
High rise	63.0	31.4	48.1	7.8	39.7
Deep pit below ground	0.0	0.0	6.4	7.3	2.9
Shallow pit (pit at ground level with raised cages)	23.4	19.9	1.6	24.1	18.9
Flush system to anaerobic lagoon	0.0	41.0	0.0	12.0	12.5
Belt System	13.6	4.3	20.2	5.2	10.6
Scrape system	0.0	2.5	23.7	43.6	15.4
Total	100	100	100	100	100

Regions: Great Lakes: IN, OH, and PA; Southeast: ALAAP, FL, GA, and NC; Central: AR, IO, MN, MO, and NE; West: CA, TX, WA.
USDA, 2000

6.2.5 Mortality Management

It can be expected that about one percent of the starter pullets will die each month throughout the laying cycle. To prevent the possible spread of disease, dead birds must be removed from cages daily, if not more frequently. Several options are available for dead bird disposal. Of these options, composting is one of the more desirable approaches from a water quality perspective.

Catastrophic losses of laying hens also occur. Loss of power and mechanical ventilation during periods of extremely hot weather is the most common cause. Weather events such as hurricanes and tornadoes also can cause catastrophic losses. There also are several options for disposal of catastrophic losses, with burial being the most commonly used practice. Large-scale composting is another option.

6.3 Turkeys

Turkey production is very similar to broiler production. The principal difference between turkey and broiler production is the size of bird produced and the length of the grow-out cycle. Due to the longer grow-out cycle for turkeys, there typically are only two or possibly three grow-out cycles per year versus five to six for broilers.

6.3.1 Size and Location of Turkey Industry

In 1997, 6,031 turkey operations sold 307 million turkeys for wholesale distribution. In total, USDA reports more than 12,000 operations, including breeding operations, poult raising operations, small retail operations, and facilities that specialize in a first stage of growing. Turkey production has increased steadily over the past two decades, and there also has been a shift in production to fewer but larger operations. Table 6-8 illustrates how the number of turkey operations dropped while production nearly doubled from 1982 to 1997. Between 1982 and 1992, almost 21% of the turkey operations went out of business while production rose by almost 80 percent (USDA, 1998b).

Table 6-8.

Turkey Operations and Production in the United States[a]

Year	Operations	Production
1982	7,498	172,035,000
1987	7,347	243,336,000
1992	6,257	279,230,000
1997	6,031	307,587,000

[a] Total operations that sold turkeys for slaughter.
USDA, 1998c

Table 6-9 shows the size distribution of turkey operations based on sales in 1997. Although most turkey operations are relatively small, most of the production comes from larger operations. These larger operations can have an average confinement capacity of more than 130,000 birds. In 1997, the 369 largest operations (2.7 percent by number) confined 43.6 percent of the turkey population (USDA, NASS, 1997).

State-level data from the 1997 Census of Agriculture (USDA, NASS, 1999a) indicate that the north-central and southeast areas of the United States account for approximately half of all turkey farms. Key production States (determined by number of turkeys produced) are North Carolina, Minnesota, Virginia, Arkansas, California, and Missouri. Other states with significant production include Indiana, South Carolina, Texas, Pennsylvania, and Iowa. Table 6-10 shows the turkey populations by state in 1997.

Table 6-9.

Number of Turkey Operations by Size in 1997

STATE	ANNUAL SALES (birds)			
	<30,000 Birds	30,000 - 60,000 Birds	>60,000 Birds	
ALABAMA	26	0	0	
ALASKA	4	0	0	
ARIZONA	13	0	0	
ARKANSAS	69	66	154	
CALIFORNIA	108	8	95	
COLORADO	78	0	1	
CONNECTICUT	35	0	0	
DELAWARE	6	0	0	
FLORIDA	52	0	0	
GEORGIA	22	3	0	
HAWAII	0	0	0	
IDAHO	40	0	0	
ILLINOIS	80	11	18	
INDIANA	119	60	80	
IOWA	142	20	44	
KANSAS	41	3	18	
KENTUCKY	31	0	0	
LOUISIANA	13	0	0	
MAINE	99	0	0	
MARYLAND	42	2	5	
MASSACHUSETTS	70	0	0	
MICHIGAN	206	5	30	
MINNESOTA	157	42	160	
MISSISSIPPI	11	0	0	
MISSOURI	122	135	145	
MONTANA	46	0	0	
NEBRASKA	47	1	13	
NEVADA	11	0	0	
NEW HAMPSHIRE	55	0	0	
NEW JERSEY	58	1	0	
NEW MEXICO	20	0	0	
NEW YORK	146	0	1	
NORTH CAROLINA	150	268	355	
NORTH DAKOTA	16	2	11	
OHIO	187	56	38	
OKLAHOMA	41	11	13	
OREGON	97	0	0	
PENNSYLVANIA	177	63	64	
RHODE ISLAND	11	0	0	
SOUTH CAROLINA	28	51	89	
SOUTH DAKOTA	21	2	28	
TENNESSEE	41	0	0	
TEXAS	153	8	54	
UTAH	41	31	25	
VERMONT	77	0	0	
VIRGINIA	104	100	185	
WASHINGTON	62	1	0	
WEST VIRGINIA	31	13	36	
WISCONSIN	160	19	9	
WYOMING	12	0	0	
UNITED STATES	**3378**	**982**	**1671**	**6,031**

USDA, 1999a

Table 6-10.

Turkey Inventory by State

STATE	INVENTORY (1,000 Birds)
ALABAMA	-
ALASKA	-
ARIZONA	-
ARKANSAS	10,465
CALIFORNIA	7,326
COLORADO	1,360
CONNECTICUT	2
DELAWARE	-
FLORIDA	-
GEORGIA	61
HAWAII	-
IDAHO	-
ILLINOIS	1,221
INDIANA	5,058
IOWA	2,442
KANSAS	663
KENTUCKY	-
LOUISIANA	-
MAINE	-
MARYLAND	258
MASSACHUSETTS	29
MICHIGAN	-
MINNESOTA	15,872
MISSISSIPPI	-
MISSOURI	7,326
MONTANA	-
NEBRASKA	-
NEVADA	-
NEW HAMPSHIRE	5
NEW JERSEY	26
NEW MEXICO	-
NEW YORK	178
NORTH CAROLINA	18,663
NORTH DAKOTA	907
OHIO	2,337
OKLAHOMA	-
OREGON	-
PENNSYLVANIA	4,047
RHODE ISLAND	-
SOUTH CAROLINA	3,907
SOUTH DAKOTA	1,256
TENNESSEE	-
TEXAS	-
UTAH	-
VERMONT	14
VIRGINIA	9,070
WASHINGTON	-
WEST VIRGINIA	1,570
WISCONSIN	-
WYOMING	-
OTHER	11,027
UNITED STATES	**105,088**

USDA, 1998b

6.3.2 Turkey Production Cycles

The growth of a turkey is commonly divided into two phases: brooding and grow-out. The brooding phase of a poult (young turkey) is from 1 day old to about 6-8 weeks. During this time, the poults need supplemental heat. Brooder heaters are used to keep the ambient temperature at 90 to 95°F when the poults arrive. Thereafter, the producer decreases the temperature by 5 °F for the next 3 weeks until the temperature reaches 75°F. Brooding can occur either in a partitioned area of the house called the brooding chamber or in an entirely separate house. Separate poult housing is more prevalent in larger operations for purposes of disease control.

The grow-out phase starts after the brooding phase. Depending on the sex of the birds, the grow-out phase typically lasts up to 21 weeks, resulting in a live slaughter weight of between 30 and 37 pounds. At the end of the production cycle, the house is completely cleaned out.

Typically, two flocks of turkeys are produced annually because of the longer grow-out cycle and the somewhat seasonal demand for turkey. As the demand for turkey has increased and become somewhat less seasonal, a third flock may be started with grow-out completed in the following year. Turkeys are fed primarily corn-soybean based diets, which also may include various cereal grains and a variety of other ingredients.

6.3.3 Turkey Confinement Practices

Essentially all turkey production occurs in partially or totally enclosed facilities divided into two or three chambers. Newly hatched turkeys are placed in a brood chamber. As with broiler chickens, the second, or second and third chambers, are opened to provide more floor space per bird as the birds grow. In cold weather, some heat may be provided throughout the grow-out cycle.

Some turkey producers use separate brood and growing houses and move birds from the brooding house to the growing house after about six to eight weeks. Another production practice

is to use the brood chamber in a house exclusively for brooding and use the remainder of the house for grow-out after the birds reach the age of six to eight weeks. These management systems are known as two-age management systems.

Confinement facilities for turkeys are similar to those used for broilers typically being 40 feet wide but usually only 300 to 400 feet in length. They also may be totally enclosed or partially enclosed with partially open, screened sidewalls that can be closed using curtains. Size of sidewall opening depends on climate and may be as much as 4 to 5 feet high in warm climates. Partially enclosed facilities are more common in warmer climates such as the South and Southeast whereas totally enclosed facilities are more common in the north. As with broilers and laying hens, totally enclosed facilities generally have automatic delivery and mechanical ventilation. Negative pressure ventilation is the principal method of ventilation used.

6.3.4 Turkey Manure Management

Turkeys are raised on litter, typically sawdust or wood shavings. Total clean-out of brood chambers and brood houses after each flock is common. In growing chambers or houses, cake is removed between flocks and a total clean-out occurs annually.

Other aspects of turkey manure handling are similar to broiler operations. After removal from the housing facilities, manure can be directly applied to the land (if available), stored in covered or uncovered stock piles prior to land application, or pelletized and bagged for use as commercial fertilizer. In the turkey sector, the use of litter sheds to store cake and little from total clean-outs is emerging. However, storage of these materials in uncovered piles continues to be a common practice.

6.3.5 Mortality Management

Typically, about four to five percent of the turkey poults will die during the grow-out cycle, with the highest rate of loss occurring during the initial weeks of the grow-out cycle. As with broilers and laying hens, dead birds must be removed daily if not more frequently with

disposal being the responsibility of the grower. Again, several options are available for carcass disposal with composting being one of the more desirable approaches from a water quality perspective.

Catastrophic losses of turkeys also occur during periods of extremely hot weather and also due to weather events such as hurricanes, tornadoes, and snow or ice storms. Older turkeys like older broilers, are more susceptible to catastrophic losses during periods of extremely hot weather. There also are several options for disposal of catastrophic losses with burial being the most commonly used practice. Large-scale composting is another option.

6.4 Poultry Model Farms

Four basic model farms were identified for poultry based on current practices: broiler house, caged layer high rise house, caged layer flush house, and turkey house. Broiler houses and turkey houses are similar, therefore, the model farms for broilers (C1, C2) and turkeys (T1, T2) follow the same confinement, storage and stabilization, and land application phases. In the broiler and turkey model farms, operators either store litter or directly apply it to land. The caged layer house differs because the manure is not mixed with bedding and in some caged layer houses, manure is removed by flushing to an anaerobic lagoon. None of the model farms has solids separation activities.

Broilers

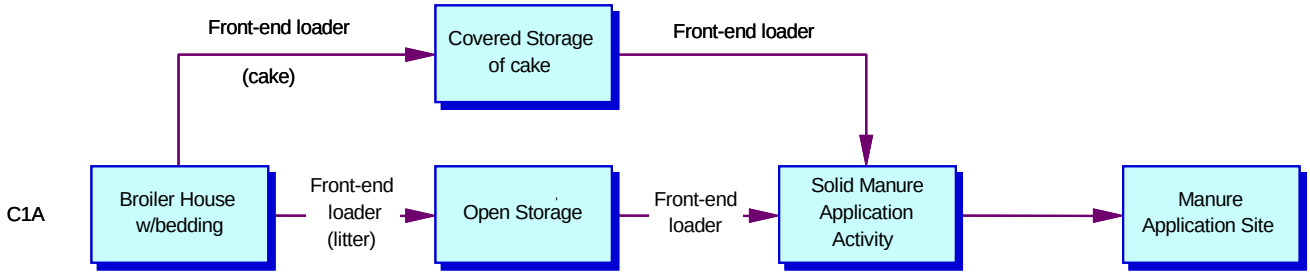

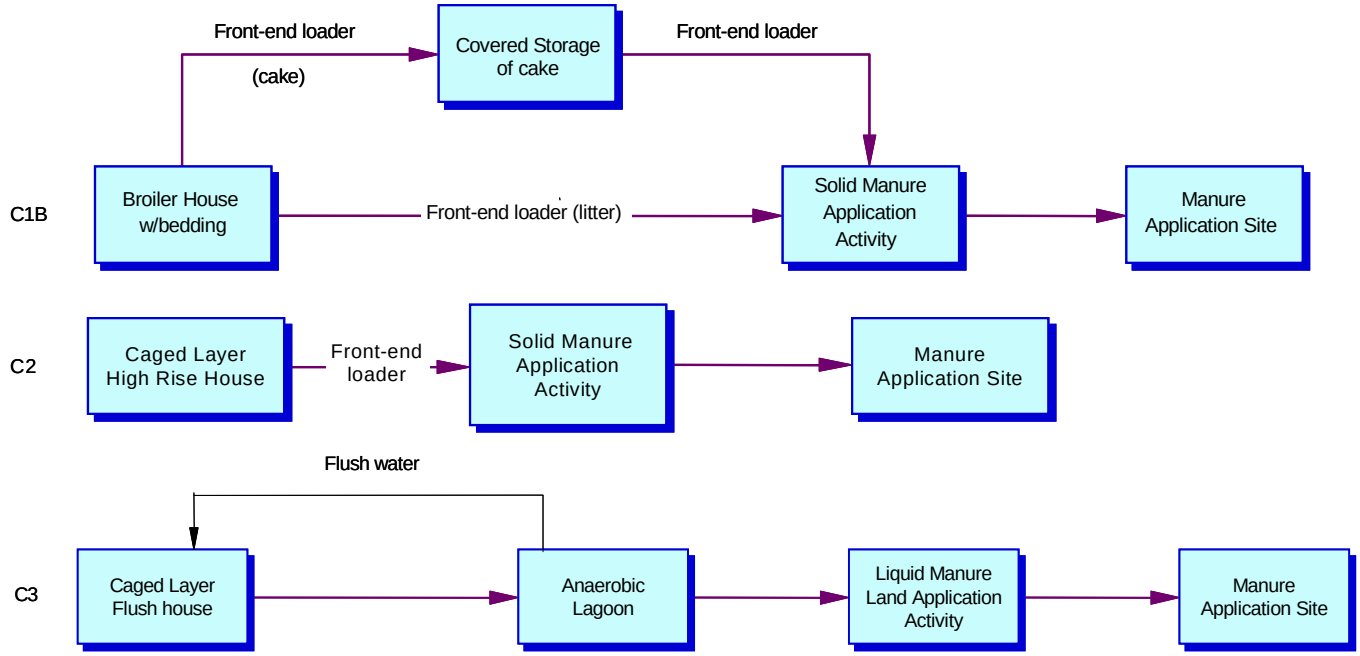

Turkeys

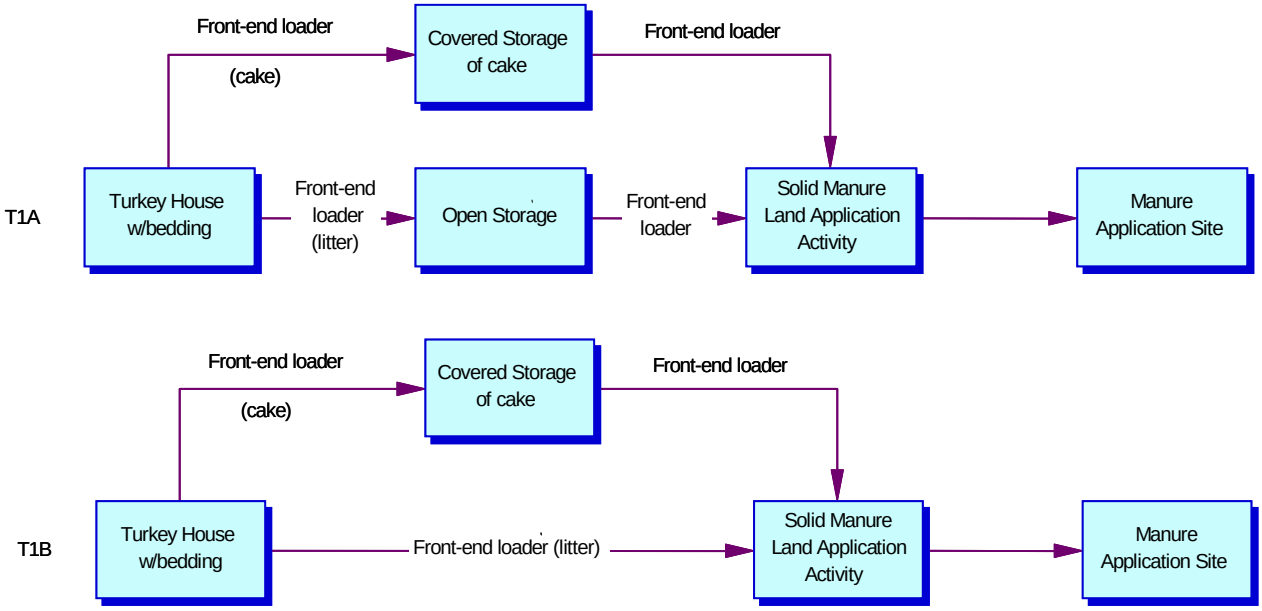

6.4.1 Confinement

Model farms C1 and T1 represent broiler chickens and turkeys kept in enclosed housing with bedding derived from wood shavings, rice hulls, chopped straw, peanut hulls, or other

materials. The litter (bedding and manure) is removed using a front-end loader every one to three years. Cake is removed using specially designed equipment after each flock is cycled.

Model farm C2 reflects caged layers kept in a high-rise house without bedding. Model farm C3 represents a caged layer flush house. In this model, cages are suspended over shallow pits with water used to flush manure to storage/stabilization systems.

The confinement facility is a source of particulate matter (from the litter, feather particles, and feed), ammonia, and hydrogen sulfide. For this analysis, it was assumed that emissions during solids transport (i.e., front-end loader) would have negligible air impacts due to the short duration the manure would spend in transport.

6.4.2 Storage and Stabilization

The dry manure from broiler and turkey houses is either stored or directly applied to land. In all cases, the models assume that cake is stored separately in a covered shed. Manure from total clean-out of barns can either be stored in an open storage pile and then applied to land (C1A and T1A) or directly applied to land (C1B and T1B).

The caged layer high-rise house (C2) does not have a separate manure storage facility. Manure is sent directly from the confinement facility to be land applied.

Two types of storage and stabilization processes were considered for caged layer flush houses (C3): (1) an anaerobic lagoon (also referred to as a combined lagoon and storage pond or one-cell lagoon), or (2) a separate storage pond following a stabilization lagoon (two-cell lagoon). Review of industry practices indicated that the anaerobic lagoon was the most commonly used method. Additionally, a review of emission mechanisms and existing emission data indicated that total emissions would not be substantially different between the one-cell and two-cell systems. Therefore, the model farms only include an anaerobic lagoon. The supernatant (clear liquid overlying material deposited by settling) from the lagoon is used as flush water.

6.4.3 Land Application

Land application includes the manure application activity and the manure application site (i.e., cropland or other agricultural land). In model farms C1, C2 and T1, the dry manure is assumed to be land applied to the manure application site using a solid manure spreader. Three types of land application activities were considered for liquid manure in developing the model farms, land application by: (1) liquid surface spreader, (2) liquid injection manure spreader, or (3) irrigation. Review of industry practices indicated that injection is rarely used. The emissions from irrigation and liquid surface spreading were assumed to be similar due to the short duration of each activity and similar emission mechanisms. Therefore, the model farms do not distinguish among land application methods.

6.5 References

Abt. 1998. Preliminary Study of the Livestock and Poultry Industry: Appendices. Abt Associates, Inc., Cambridge, Massachusetts.

NCC. 1999. National Chicken Council comments from John Thorne to Janet Goodwin and Paul Shriner, U.S. Environmental Protection Agency (USEPA). September 8, 1999.

USDA. 1998a. Agricultural Statistics. U.S. Department of Agriculture (USDA), National Agricultural Statistics Service (NASS). Washington, D.C.

USDA. 1998b. Poultry Production and Value, Final Estimates 1994-97. Statistical Bulletin 958. U.S. Department of Agriculture (USDA), National Agricultural Statistics Service (NASS). Washington, D.C.

USDA. 1998c. Chickens and Eggs Final Estimates 1994-97. Statistical Bulletin 944. U.S. Department of Agriculture (USDA), National Agricultural Statistics Service (NASS). Washington, D.C.

USDA. 1999a. 1997 Census of Agriculture. U.S. Department of Agriculture (USDA), National Agricultural Statistics Service (NASS). Washington, D.C.

USDA. 2000. Part II: Reference of 1999 Table Egg Layer Management in the United States (Layer'99). U.S. Department of Agriculture (USDA), Animal and Plant Health Inspection Service (APHIS). Fort Collins, Colorado.

7.0 LAND APPLICATION

Essentially all the manure from livestock and poultry production is applied to cropland for ultimate disposal. A small percentage is composted and sold for horticultural and landscaping use, which merely constitutes another form of land application. Also, a very small percentage of broiler and turkey manure and litter is used in the cow-calf and backgrounding sectors of the beef cattle industry as a supplemental feed.

In the aggregate, livestock and poultry manure contain a substantial fraction of the primary plant nutrients (nitrogen, phosphorus, and potassium) required for plant growth. Manure also is a valuable source of organic matter. Organic matter has value in maintaining the productivity of agricultural soils by increasing water holding capacity and contributing to the maintenance of soil structure, which is critical for oxygen transfer into the root zone. Because crop production substantially reduces soil organic matter levels, application of manure to cropland provides the opportunity for replenishment.

Theoretically, livestock and poultry manure is applied to cropland only at rates adequate to supply crop nutrient needs. Historically, the determination of application rates has been based on crop nitrogen requirements, which has led to the over-application of phosphorus and potassium. This practice was based a primary concern about the impacts of excess nitrogen on surface and ground waters and the belief that soils had an essentially infinite capacity to immobilize the excess phosphorus being applied. It has, however, become apparent that many soils used for livestock and poultry manure disposal have become saturated with phosphorus and transport of significant quantities of soluble phosphorus in surface runoff to adjacent surface waters is occurring. Therefore, the use of crop phosphorus requirements is emerging as the basis for determining rates of manure application to cropland. For soils with high plant available phosphorus concentrations, manure application probably will be prohibited in the future.

It should be recognized, however, that there has been a trend toward applying livestock and poultry manure to cropland at rates in excess of crop requirements as consolidation in the various sectors of animal agriculture has occurred. This is a reflection of the ongoing separation

of animal and crop production activities in U.S. agriculture and the limited land resources commonly associated with animal production activities.

7.1 Methods of Land Application

Manure can be land applied in solid, liquid, or slurry form. Application in a solid form has several advantages. Weight and volume are reduced as water content is reduced; however, most operations prefer to handle and dispose of waste in a liquid form because of the reduced labor costs of handling the waste in this manner (USDA, 1992). Chapters 3-6 discuss the physical states of manure from AFOs. Beef and dairy AFOs represented by the model farms have both solid and liquid (or slurry) manure. Veal model farms only have liquid manure, and swine model farms only have liquid (or slurry) manure. Poultry model farms without flush houses have only solid manure, while poultry model farms with flush houses have both solid and liquid manure.

Solid manure can either be applied to the surface or applied to the soil surface followed by incorporation. Liquid and slurry manure can be applied to the surface of soil, applied to the soil surface and followed by incorporation, or injected into the soil. Chapters 3-6 discuss methods of land application most common for waste produced from each animal type. Methods of applying manure to soil are discussed in the following sections.

7.1.1 Surface Application

Manure such as broiler, turkey, and drylot dairy manure are handled as solids and spread by broadcasting on the soil surface. The spreading device used is known as a box type manure spreader. As the name implies, this type of spreader simply is a rectangular box that is either tractor-drawn or truck-mounted with a spreading device at the rear end. During spreading, manure moves to the rear of the box by either a belt or chain-and-flight conveyor. Box type manure spreaders are loaded using skid-steer or tractor-mounted front-end loaders. Large beef cattle feedlots also use pay-loaders (USDA, 1992).

Manure handled as slurries, such as scraped dairy manure from a free-stall barn and swine manure from a deep pit, are spread using tractor-drawn or truck-mounted tanks known collectively as liquid manure spreaders. With closed tanks, the manure may be forced out of the tank under pressure against a distribution plate to create a spray pattern. Another option is to force the manure from the tank under pressure through a manifold with a series of hanging or trailing pipes to create parallel strips of manure on the soil surface. A second type of spreader for manure slurries is a flail-type spreader. This is a partially open tank with chains attached to a rotating shaft positioned parallel to the direction of travel. Manure is discharged perpendicular to the direction of travel by the momentum transferred from the rotating chains (USDA, 1992).

Closed tank type liquid manure spreaders also may be used for the application of anaerobic lagoon liquids to cropland. However, irrigation is commonly used to reduce the labor requirements for disposal. Both traveling gun and center pivot irrigation systems are used with specially designed spray nozzles to allow passage of manure solids and prevent clogging. Solid set irrigation systems also are rarely used due to the labor required for moving the system (USDA, 1992).

With the exception of irrigation systems, manure spreaders are rather crude devices with respect to uniformity of manure distribution. In addition, application rates vary substantially with speed of travel, and spreader calibration is necessary for even a relatively uniform application rate. The inherent variability in the composition of manure especially among different methods of collection and storage/stabilization also contribute to variability in nutrient application rates (USDA, 1992).

7.1.2 Incorporation

Surface applied solid and slurry type manure may be incorporated into the soil by either disking or plowing. Incorporation by these methods or direct injection will reduce odors from the manure application site. Incorporation also provides surface water quality benefits by reducing the potential for run-off of nutrients, oxygen demanding organic compounds, and

pathogens in adjacent surface waters. It also serves to conserve nitrogen by reducing nitrogen loss via ammonia volatilization. Incorporation is not practiced with irrigation (USDA, 1992).

7.1.3 Injection

Subsurface injection is probably the best incorporation method because it occurs immediately as manure is spread and only minimally disturbs the soil surface. This makes it attractive for reduced till and no-till cropping systems. Variously shaped devices are used to cut vertical slots in the soil into which slurry is placed. The slots can be left open or fully covered by closing the slots with press wheels or rollers. (USDA, 1992).

7.2 Emissions From Land Application

Due to the numerous variables affecting the nature and emission rates of PM, ammonia, nitrous oxide, hydrogen sulfide, methane, and VOC, even generally quantifying emissions of these substances from land application sites. Adding to this problem is the effect of emissions of these substances prior to land application. For example, a high rate of ammonia loss from an anaerobic lagoon due to warm summer temperatures will translate into lower emissions from the land application site. Conversely, a low rate of ammonia loss from an anaerobic lagoon will translate into a higher loss during land application. Thus, the lack of consistent estimates of emissions from land application sites found in the literature is understandable.

Emissions from land application occur in two phases. The first phase occurs during and immediately following application. These short-term emissions are influenced by the type of manure application method used. The second phase is the release from the soil that occurs over a longer term from the microbial breakdown of substances in the applied manure.

7.2.1 Short-Term Emissions

Particulate Matter

If manure is handled as a solid and has a relatively low moisture content, PM emissions will occur during the spreading process and also may occur immediately after spreading as the result of wind action. The duration of PM emissions due to wind action after spreading depends on weather conditions and is highly variable. For example, a precipitation event occurring immediately after spreading can essentially eliminate PM emissions after spreading. Irrigation, obviously, will have the same effect. Conversely, a period of windy, dry weather after spreading will increase PM emissions.

Nitrogen Compounds, Hydrogen Sulfide, and VOC

If ammonia, hydrogen sulfide, or VOC are present in the manure being spread, emissions will occur by volatilization to the air. The magnitudes of these emissions primarily will depend on whether or not the manure is incorporated into the soil by disking, plowing, or direct injection. Theoretically, injection should be the most effective technique for minimizing the emissions of these compounds, because it prevents exposure to the atmosphere. Efficiency depends to a degree, however, on subsequent closure of the channel or slit in the soil formed by the injector. With disking and plowing, efficiency depends on the time between spreading and incorporation. Plowing is more effective than disking in reducing emissions, because disking will leave some manure exposed to the atmosphere. Precipitation or irrigation immediately following manure spreading also will reduce emissions of ammonia, hydrogen sulfide, and VOC by the transport of these water-soluble compounds into the soil. In the short-term, nitrification, and consequently nitrous oxide emissions, will not occur (Alexander, 1977; Brock and Madigan, 1988; Tate, 1995).

Methane

Little or no methane will be emitted in the short-term because methane is essentially insoluble in water. Only methane in manure will have volatilized prior to land application. Therefore, any short-term methane emissions from land applications sites will be limited to small amounts that are formed immediately following application of manure slurries and liquid manure. Drying and aerobic conditions will limit additional formation of methane to negligible amounts.

7.2.2 Long-Term Emissions

Land application sites used for the disposal of livestock and poultry manure are potential short-term sources of emissions of particulate matter, ammonia, hydrogen sulfide, and VOC. Given the number of variables with the potential to influence the magnitude of actual emissions, developing typical emission factors is problematic. Long-term emissions should be limited to possibly some nitrous oxide emissions. However, these emissions should not be substantially different from those resulting from the use of inorganic nitrogen fertilizers.

Cropland soils are generally aerobic microbial environments except for transient periods of saturation associated with precipitation and possibly irrigation events. Therefore, manurial ammonia, hydrogen sulfide, and VOC not lost by volatilization during or immediately after manure spreading and entering the soil profile should be oxidized microbially to nitrate, sulfate, and carbon dioxide and water, respectively. The nitrogen, sulfur, and carbon in organic compounds subsequently mineralized also will be oxidized.

Nitrogen Compounds

Under transient periods of saturation and anaerobic conditions, any nitrate remaining after plant uptake and leaching to groundwater may undergo microbially mediated denitrification. As discussed earlier in Chapter 2.0, the principal end product of denitrification, is dinitrogen gas. However, small amounts of nitrous oxide and nitric oxide also may be emitted under certain

environmental conditions. Therefore, land used for manure disposal can be considered as a potential source of nitrous oxide emissions. However, nitrous oxide also is generated when denitrification follows the application of inorganic nitrogen fertilizer materials. Thus, it appears nitrous oxide emissions would be no greater than if commercial fertilizer are used if nitrogen (in manure) application rates are based on crop requirements. However, application rates in excess of crop requirements would result in higher emissions.

Hydrogen Sulfide

Hydrogen sulfide is oxidized to sulfate in the soil, but subsequently may be reduced back to hydrogen sulfide during transient saturated soil conditions. The high solubility of hydrogen sulfide and other reduced sulfur compounds, however, should preclude any significant emissions. Reoxidation will occur following the return to aerobic conditions (Alexander, 1977; Brock and Madigan, 1988; Tate, 1995).

Methane and VOC

Under transient saturated conditions, any remaining organic compounds in manure may be reduced to VOC and methane. However, any VOC formed will be oxidized to carbon dioxide when aerobic conditions are reestablished. Given that methanogenic bacteria are obligate anaerobes, (i.e., microorganisms that do not grow in the presence of oxygen) the presence of a population sufficient to generate any significant quantity of methane under transient anaerobic conditions is highly unlikely. In addition, if methane is formed, a population of methanotrophic (methane oxidizing) microorganisms capable of oxidizing methane to carbon dioxide may be present (Alexander, 1977; Brock and Madigan, 1988; Tate, 1995).

7.3 References

Alexander, M. 1977. Introduction to Soil Microbiology, 2nd Ed. John Wiley and Sons, New York, New York.

Brock, T.D. and M.T. Madigan. 1988. Biology of Microorganisms, 5th Ed. Prentice Hall, Englewood Cliffs, New Jersey.

Tate, R.L. 1995. Soil Microbiology. John Wiley and Sons, New York, New York.

USDA. 1992. Agricultural Waste Management Field Handbook, National Engineering Handbook, Part 651. U.S. Department of Agriculture (USDA), Natural Resources Conservation Service (NRCS), Washington, D.C.

8.0 EMISSIONS FROM MODEL FARMS

This chapter explains the methods used to estimate emissions from model farms. The model farms reflect combinations of different confinement facilities, manure collection systems, and manure storage practices. For this study, emission factors were developed for each element of a model farm (e.g., drylot, storage pond). The estimated emissions for the entire model farm were then calculated by summing the emissions from each element. The following approaches were employed to develop emission factors.

- Emissions factors were gathered from the literature or derived based on emission measurements data found in the literature (Section 8.1).
- If emission data were not available from literature, an emission factor developed for one animal species was translated to another species, when justifiable (Section 8.2).
- If emission factors were unavailable from literature and could not be translated from one species to another, an emission factor was derived based on the quantity of precursors in the manure, where appropriate (e.g., nitrogen content of manure was used to estimate ammonia and nitrous oxide emissions in some cases) (section 8.2). The method for estimating the quantity of precursors in manure is explained in Section 8.3.
- Where no emission factors or estimation methods were identified, no emissions were estimated, but the results identified elements of the model farm where emissions are expected. This judgement was based on knowledge of fundamental microbial and emission mechanisms.

Section 8.4 presents the emission factors and the annual emissions from the model farms. To provide a perspective on these results, Section 8.5 compares the model farm emissions to the amount of volatile solids, sulfur, and nitrogen in manure (the upper limits for transformation into gaseous substances).

8.1 Development of Emission Factors From Literature Sources

The first step in developing emission factors was a literature search to locate published information about emissions. Included in this search were relevant peer reviewed journals and published conference proceedings and research reports available as of May 2001. The AGRICOLA (Agricultural Online Access) bibliographic data base was used (ERG, 2000). A total of 481 seemingly applicable references were identified, obtained, and reviewed. A complete list of all references obtained in the literature search is provided in Appendix B.

Emission Data Review

In the review of each publication, the principal objective was to find emission factors or measurements data to allow derivation of emission factors by the individual elements of the model farms. Each publication was reviewed to insure that the information presented was representative of expected emissions from the model farms defined for this study. Studies that could not be partitioned to estimate emission factors for individual elements of the model farms were not used. Accordingly, the studies were screened to identify emission data that could be related to the following parameters:

- Animal species;
- Number of animals present;
- Type of confinement facility;
- Type of manure handling and storage system;
- Phase of production (e.g. finishing operation);
- Specific emission points tested; and
- Units of measure that could be converted to mass per year.

When the publications were screened, it became evident that many of these articles did not contain the necessary information to develop emission factors. Some of the articles provided

only concentration or flux measurements without any background information such as confinement capacity, number and age or size of animals present, or characterization of any accumulated manure present to allow translation of the measured values reported into an emissions factor. For example, a reference might provide a measurement of ammonia emissions but not indicate what size farm or number of animals associated with the emissions measurements. Some studies provided concentration measurements at confinement houses without indication of the volumetric flow rates needed to convert concentrations to an emission rate. Some emission factors were expressed in units of measure that could not be converted to a mass per year per animal unit basis (e.g., mass per kg of litter per day). Some references presented data from laboratory studies and novel manure management techniques that were unlikely to be representative of typical U.S. operations. In addition, some of the references did not have adequate documentation of the emission points measured. For example, a reference might not indicate if emissions were measured from a flush house, anaerobic lagoon, or a combination of both. Other articles provided emission factors for the entire farm or from several emission sources combined.

It also was discovered that no approach was being employed to enable the direct comparison of emission factors on a standard basis. One of the more commonly used approaches was a per unit confinement capacity per year basis (e.g., mass emitted per number of broilers confined in a year). However, approaches were encountered such as mass per area confined per hour, mass per pig place, and mass per animal lifetime.

Table 8-1 tabulates the number of references identified with useful emission information to develop emission factors for each animal type. These references account for approximately 6 percent of the publications reviewed. Appendix C contains summaries of the information that was extracted from these articles to develop emission factors. References with emissions information that were not used in this study, and the reasons for not using them, are shown in Appendix D.

Table 8-1.

References Identified with Useful Emission Information

Animal Type	Number of References[a]
Beef	6
Dairy	6
Veal	0
Broiler	8
Layer	7
Turkey	4
Swine	24

[a] References are identified in Section 8-4 and summarized in Appendix C.

Emission Factor Development

From these emission data, emission factors were developed on the basis of mass per year per animal unit (lb/year-AU). An animal unit (AU) is a standard basis for comparing the size of AFOs across different species. While there are different definitions of AU, this study used the definition by the EPA Office of Water. The proposed revisions to the National Pollutant Discharge Elimination System Permit regulations and Effluent Limitation Guidelines and Standards for Concentrated Animal Feeding Operations (66 FR 2960) defined an AU as the capacity to confine:

- 1 cattle, excluding mature dairy and veal cattle;
- 0.7 mature dairy cattle;
- 2.5 swine weighing over 55 pounds;
- 10 swine weighing 55 pounds or less;
- 55 turkeys;
- 100 chickens; or

- 1 veal.

An annual basis was used to adequately reflect the differences in production cycles, feed consumption, and manure production among the various species of animals. Thus, emission data or factors that were expressed on another basis (e.g. confinement capacity or time period) were converted to an annual basis using typical values for live weight, lengths of production cycles, and number of production cycles per year. The values used to make these conversions are described in Section 8.3.2.

In many cases, the emission factors were based on only one or two references. Where valid emission factors were available from more than one study, a mean emission factor was calculated for that particular pollutant and element of the model farm. In some instances, a reference contained results from emission measurements during different seasons of the year or at different geographic locations. Where ranges of emission values were reported in a study, the mean of the values reported was used to develop the emission factor.

8.2 Other Methods Used to Calculate Emissions

In the absence of emission factor estimates based on measured values, two alternative approaches were employed. The first approach was to translate emission factors from one animal species to another by adjusting for differences in the quantity and composition of manure. The second approach was to calculate emissions based on precursors in the manure (nitrogen, sulfur, and volatile solids). These approaches were used when a rational basis and sufficient data were available to support the alternate approach. The option of using theoretical models, especially for estimating ammonia emissions, was considered. However, it was found that these models would have required an extensive degree of validation that was outside the scope of this study. The alternative approaches used for each pollutant (when emissions data were not available) are summarized in Table 8-2 and described in the following sections.

Table 8-2.

Summary of Emission Estimation Methods

Substance	Emission Factors	Translated from One Animal Type to Another	Factors Based on Precursor Generation
Ammonia	✔	✔[a]	
Nitrous oxide			✔[b]
Hydrogen sulfide	✔	✔[c]	
VOC			✔[b]
Particulate matter	✔		

[a] Flush dairy barns, dairy lagoons, poultry lagoons, turkey barns.
[b] All emission factors.
[c] Poultry lagoons, dairy lagoons.

8.2.1 Ammonia

For most emission sources, ammonia emission factors were found in the literature. However, no emission factors were found for dairy freestall barns with flush systems or anaerobic lagoons for dairy and laying hen manure. For these sources, emission factors were developed by translating ammonia emission factors from the swine sector. Although manure characteristics differ significantly from one animal species to another, the mechanism by which ammonia is formed and the chemistry of ammonia in solution should not be different (Alexander, 1977; Brock and Madigan, 1988; Tate, 1995). Therefore, it was judged that for these sources, emission factors developed for one species could be translated to another by adjusting to reflect differences in excretion rates. Accordingly, emission factors from swine lagoons were applied to anaerobic lagoons in the laying hen and dairy model farms. Emission factors for swine flush houses were translated to dairy flush barns.

These translations were done by assuming that the ratio of ammonia emitted to the nitrogen in manure is the same for swine, poultry, and dairy cows. Equation 8.1 illustrates the translation for anaerobic lagoons for laying hens:

$$EF_{am,h} = \frac{EF_{am,s}}{M_{ns}} \times M_{n,h} \quad (8.1)$$

Where,

$EF_{am,h}$ = Emission factor for ammonia from anaerobic lagoons for laying hens (lb/year).

$EF_{am,s}$ = Emission factor for ammonia from an anaerobic lagoon for swine (lb/year).

$M_{n,s}$ = Nitrogen excretion rate in swine manure (lb/year).

$M_{n,h}$ = Nitrogen excretion rate in laying hen manure (lb/year).

The calculations for translating emission factors from one animal species to another are presented in Appendix E. The calculation of nitrogen excretion rates is discussed in Section 8.3. Table 8-3 summarizes the basis for the ammonia emission factors used.

8.2.2 Nitrous Oxide

Emission factors for nitrous oxide were not found in the literature. In all cases, therefore, nitrous oxide emissions were based on the nitrogen content of manure. Factors relating the emission of nitrous oxide (as nitrogen) to the amount of nitrogen in the manure (MF_{N_20}) were provided for several emission points (USEPA, 2001). The factors are listed in Table 8-4.

Nitrous oxide emissions were estimated using Table 8-4 and equation 8.2:

$$E_{N_2O} = 1.57 M_N \times MF_{N_2O} \quad (8.2)$$

Where,

E_{N_2O} = N_2O emissions, lb/yr.

M_N = Nitrogen excretion rate for a 500 AU farm, lb/year.

MF_{N_2O} = Nitrous oxide factor (Table 8-4), lb N_2O-N emitted per lb nitrogen in manure.

Table 8-3.

Sources of Ammonia Emission Factors

Animal Type	Source with Emission Factor Available	Source of Emission Factor
Beef	Drylot	Literature review
	Stockpile	Literature review
Veal	None	None
Dairy	Freestall barn (flush)	Translated from swine flush house emissions
	Freestall barn (scrape)	Literature review
	Drylot	Literature review
	Liquid manure application	Literature review
	Solids storage	Literature review
	Anaerobic lagoon	Translated from swine anaerobic lagoon emissions
Swine	Flush house	Literature review
	House with pit recharge	Literature review
	House with pull plug pit	Literature review
	House with pit storage	Literature review
	Anaerobic lagoon	Literature review
	Liquid land application	Literature review
Broilers	House	Literature review
	Storage (cake and litter)	Literature review
	Solid manure land application	Literature review
Layers	Flush house	Literature review
	High rise house	Literature review
	Manure land application (solid and liquid)	Literature review
	Anaerobic lagoon	Translated from swine anaerobic lagoon emissions
Turkeys	House	Translated from broiler-houses emission
	Storage (cake and litter)	Literature review
	Solid manure land application	Literature review

Table 8-4.

Nitrous Oxide (MF_{N_20}) Factors[a]

Source	(MF_{N_20}[b])
Anaerobic lagoon	0.001
Deep pit	0.001
Drylot	0.02
Poultry manure with bedding	0.02
Poultry manure without bedding	0.005
Stacked solids	0.02
Storage pond	0.001

[a]USEPA, 2001
[b] MF_{N_2O} = Factor relating N_2O emissions as nitrogen to nitrogen in manure, lb N_2O-N emitted per lb nitrogen in manure

The value 1.57 is the conversion factor to express the emission estimate on a nitrous oxide rather than a nitrous oxide-nitrogen basis (USEPA, 2001). The method for estimating nitrogen excretion rates is explained in Section 8.3. Nitrous oxide emission factors in Section 8.4 were calculated by dividing the nitrous oxide emissions by 500 AU and converting tons to pounds.

While these factors are the best available for nitrous oxide emissions, they were used with the qualification that they may overestimate emissions for some elements of the model farm. The basis of this conclusion is the absence of the necessary microbial environment (without inhibitory conditions) for nitrification to occur prior to land application (Section 2.2.2). Except for operations with drylots, it is highly probably that manure application sites will be the principal source of nitrous oxide emissions. The following paragraphs explain why nitrification is unlikely to occur at liquid storage sites or poultry confinement houses.

Anaerobic lagoons, deep pit storage tanks, and ponds. Given the high carbonaceous oxygen demand of animal manures and the low solubility of oxygen in water, any oxygen

transferred from the atmosphere will be rapidly utilized by the facultative heterotrophic microorganisms present. Thus, the oxygen necessary for nitrification will not be available. The presence of nitrite or nitrate nitrogen in livestock or poultry manure as excreted is highly unlikely for two reasons. One is the toxicity of these compounds which makes utilization of feedstuffs containing more than trace concentrations of the ions undesirable. Plants such as corn only accumulate these ions under stressed growth conditions such as drought conditions. Normally most plants reduce nitrites and nitrates enzymatically to ammonia before or during uptake to provide the necessary precursor for amine acid synthesis. Secondly, any nitrate nitrogen consumed will be reduced due to the anaerobic microbial environment of the gastro-intestinal tract if any nitrous oxide is formed, it should be emitted upon excretion and not subsequently from anaerobic lagoons or manure storage tanks or ponds (Alexander, 1977; Brock and Madigan, 1988; Tate, 1995).

Poultry Confinement Houses. The aerobic environment in dry poultry confinement facilities suggests that nitrification and subsequent denitrification with nitrous oxide emissions is possible. However, the high ammonia-nitrogen emissions that have been measured from broiler and turkey litters suggest the absence of any significant nitrifying activity (Anderson et al., 1964; Carlile, 1984; Caveny and Quarles, 1978; Deaton et al., 1984; Valentine, 1964). Although the factors for these sources, 0.02, appears small, it suggests significant nitrifying activity, if dinitrogen gas is the principal product of denitrification. Given the alkaline environment present, this determination appears to be a reasonable assumption since it is well established that acidic environments are more conducive to the formation of nitrous oxide as a product of denitrification (Alexander, 1977; Tate, 1995). If, hypothetically, five percent of the nitrogen gases produced by denitrification is nitrous oxide, the poultry factor of 0.02 in Table 8-4 translates into the nitrification of 40 percent of the nitrogen excreted. If a population of nitrifying bacteria capable of this level of nitrification is present, it is probable that complete nitrification would occur and the high level of ambient air ammonia concentrations that have been measured in broiler and turkey production facilities would not exist. While the reason or reasons for the lack of nitrification are not clear, free ammonia inhibition is a possible explanation (Anthonisen, et al., 1976).

The substantial difference, a factor of four, between the nitrous oxide emission factors for poultry manure with and without bedding (litter) appears questionable if the latter category applies to laying hen manure produced in high-rise type facilities. The rate of microbial heat production necessary for successful operation of high-rise houses indicates the necessity of an aerobic environment (Martin and Loehr, 1977). If nitrification occurs in poultry manure with bedding, it seems logical to also assume that nitrification also occurs in high-rise facilities for laying hens and use the same default emission factor value. Conversely, the default value of 0.005 for laying hen manure handled as a liquid or slurry due to the anaerobic microbial environment is suspect. A possible explanation for the value of 0.005 is some distribution of total bird numbers between high-rise type facilities and facilities handling manure as a slurry or liquid.

8.2.3 Hydrogen Sulfide

Hydrogen sulfide emission factors were available for swine operations, but not for poultry, dairy, and veal. For these animal sectors, hydrogen sulfide emission factors for anaerobic lagoons were calculated by translating hydrogen sulfide emission factors from the swine sector. Although manure characteristics differ significantly from one animal species to another, the rates of hydrogen sulfide formation from the various sulfur compounds contained in livestock and poultry manures under anaerobic conditions and the chemistry of hydrogen sulfide in solutions (e.g., pH levels) should not be different (Alexander, 1977; Brock and Madigan, 1988; Tate, 1995). Therefore, it was judged that for anaerobic lagoons, emission factors developed for one species could be translated to another by adjusting to reflect differences in excretion rates. The swine emission factor was adjusted to reflect different manure characteristics using the same methodology described for ammonia (Section 8.2.1). Example calculations are shown in Appendix E.

Hydrogen sulfide emissions for other animal operations either could not be calculated due to lack of information or were not expected due to aerobic conditions. For beef and veal, lack of information about typical hydrogen sulfide concentrations and concurrent pH levels in manure holding tanks in confinement facilities, storage tanks and ponds, and anaerobic lagoons

precluded the development of a theoretical model to predict hydrogen sulfide emissions. Under aerobic conditions such as those present in dry manure collection and storage facilities, sulfur excreted should be oxidized to nonvolatile sulfate. Even if transient anaerobic conditions exist leading to hydrogen sulfide formation, subsequent oxidation to sulfate is probable. Thus, hydrogen sulfide emissions from broiler and turkey confinement facilities, high rise type confinement facilities for laying hens, and drylots for beef and dairy cattle were considered to be insignificant (Alexander, 1977; Brock and Madigan, 1988; Tate, 1995). Table 8-5 indicates animal types and operations for which hydrogen sulfide emission factors have been developed.

Table 8-5.

Sources of Hydrogen Sulfide Emission Factors

Animal Type	Operation with emission factor available	Source of emission factor
Beef	None	None
Veal	None	None
Dairy	Anaerobic lagoon	Translated from swine anaerobic lagoon emissions
Swine	House with pit storage	Literature review
	Anaerobic lagoon	Literature review
	Liquid land application	Literature review
Broilers	None	None
Layers	Anaerobic lagoon	Translated from swine anaerobic lagoon emissions
Turkeys	None	None

8.2.4 Methane

Methane emissions were not estimated for the model farms. Methane emissions are a function of the mass of volatile solids present in manure, the method of manure handling, and the temperature and moisture of the manure. Temperature is an important variable because microbial decomposition decreases at low temperatures and ceases at the freezing point. Because

temperature varies by geographic region and season, it was not practical within the scope of this study to incorporate a temperature variable into the model farms. In absence of model farm emission, this section explains the methods used currently by EPA to estimate methane emissions for the U.S. greenhouse gas inventory (USEPA, 2001).

This methodology can be applied to individual farms. As an example, methane emissions were estimated from anaerobic lagoons for swine based on the 1999 monthly temperature profiles at two locations (North Carolina and Iowa). For a 500 animal unit farm in North Carolina, emissions from the anaerobic lagoon were estimated to be 42 tons per year (38 Mg/year). For Iowa, emission estimates were 38 tons per year (35 Mg/year). Swine lagoons were chosen because they generally represent the largest methane emission source at AFOs. The emission calculations for these two model farms are shown in appendix F. The methodology is explained below.

The EPA methodology is based on equation 8.3. Emissions are a function of the mass of volatile solids excreted, the methane producing capacity of manure from different animals, the type of waste management system, and the temperature of the manure.

$$\text{Methane Emissions (per head)} = VS_{excreted} \times B_o \times 0.67\ kg/m^3 \times MCF \qquad (8.3)$$

Where:

$VS_{excreted}$	=	Volatile solids excreted (kg/yr)
B_o	=	Maximum methane producing capacity ($m^3\ CH_4$/kg VS)
MCF	=	Methane conversion factor based on the waste management system (%)
0.67	=	Methane density at 20 ^oC, 1 atmosphere (kg/m^3)

The calculation of volatile solids excreted is discussed in section 8.3.

The methane production potential of animal waste (B_o) is the maximum quantity of methane ($m^3\ CH_4$) that can be produced per kilogram of volatile solids (VS) in the manure.

Values for B_o are available from literature and are based on the animal species and diet. Table 8-6 presents the values for B_o that have been used in developing EPA's greenhouse gas inventory and other EPA studies (USEPA, 2001).

Table 8-6.

Methane Production Potentials From Livestock and Poultry Manures

Animal type	B_0 (m^3 CH_4/kg VS excreted)	Reference
Mature dairy cow	0.24	Morris (1976)
Heifer	0.17	Bryant et al. (1976)
Calf	0.17	Bryant et al. (1976)
Beef (high energy diet)	0.33	Hashimoto et al. (1981)
Broilers	0.36	Hill (1984)
Turkeys	0.36	Hill (1984)
Laying hens	0.39	Hill (1982)
Swine (grow-finish)	0.48	Hashimoto (1984)
Swine (farrow to finish)	0.48	Hashimoto (1984)

The methane conversion factor (MCF) is an estimate of the fraction of volatile solids that will be converted to methane in a given type of manure management system at a specific temperature. The MCFs used in the greenhouse gas inventory for various livestock and poultry manure management options are listed in Table 8-7 (USEPA, 2001). Because the rate of reduction of volatile solids to methane is a direct function of process temperature, MCFs will vary with climate and season of the year.

The EPA inventory method uses the MCF values in Table 8-7 for dry manure handling systems (composting, drylots, poultry manure, and stacked solids). For wet systems (anaerobic lagoon, deep pit, and storage ponds), the method uses the Van't Hoff-Arrhenius equation (equation 8-4) to estimate MCF. The Van't Hoff-Arrhenius equation allows a more precise estimate of the effect of local temperature variations on the biological conversion to methane.

Table 8-7.

Methane Conversion Factors For Various Livestock and Poultry Manure Management System Components

Manure Management System	Methane Conversion Factor (%) by Climate		
	Cool[a]	Temperate[b]	Warm[c]
Anaerobic lagoon	0-100	0-100	0-100
Composting	0.5	0.5	0.5
Deep pit (< 1 month)	0	0	30
Deep pit (> 1 month)	39	45	72
Drylot	1	1.5	5
Poultry manure with bedding	1.5	1.5	1.5
Poultry manure without bedding	1.5	1.5	1.5
Stacked solids	1	1.5	5
Manure storage pond	39	45	72

[a] Temperatures are less than 15°C
[b] Temperatures are between 15°C and 25°C
[c] Temperatures are greater than 25°C
USEPA, 2001

$$f = \exp\left[\frac{E\ (T2 - T1)}{R\,T1\,T2}\right] \tag{8.4}$$

Where:

f = Temperature adjustment factor, substituting for MCF, dimensionless

T1 = 303.16°K

R = Ideal gas constant (1.987 cal/K mol)

E = Activation energy constant (15,175 cal/mol)

T2 = Ambient temperature for a geographic region (°K)

For deep pits and manure storage ponds, EPA bases the value of "f" on annual average temperature in each state. The annual average state temperatures are based on the counties where the specific animal population resides (i.e., the temperatures were weighted based on the percent

of animals located in each county). The approach used for anaerobic lagoons is also based on the Van't Hoff-Arrhenius equation, but is calculated on a monthly basis instead of yearly to account for the longer retention time and associated build up of volatile solids in these systems.

8.2.5 Volatile Organic Compounds

A variety of volatile organic compounds may be present in livestock and poultry manures. Many of these compounds are present in freshly excreted manure but also may be formed subsequently when the manure is stored under anaerobic conditions. Under anaerobic conditions, the organic carbon in manure is converted to methane and carbon in a complex set of reactions in which VOC is created and then consumed as intermediates. When the microbial reduction of the carbon to methane and carbon dioxide is inhibited (e.g., by cold temperatures or bacterial imbalances), VOC accumulates and may be emitted (Alexander, 1977; Brock and Madigan, 1988; Tate, 1995).

Under aerobic conditions, such as found in the broiler industry, carbon is degraded to carbon dioxide and water, and no VOC is emitted. Thus, emissions of VOC from broiler and turkey production facilities, high rise type confinement facilities for laying hens, and drylots from beef and dairy cattle should be minimal in comparison to facilities used for liquid manure storage and anaerobic stabilization.

Emissions from anaerobic lagoons for swine, laying hen, and dairy cattle manures also should be minimal except when low temperatures reduce the rate of conversion of organic carbon to methane and carbon dioxide. However, there will be VOC emissions from anaerobic lagoons located in colder climates when lagoon temperatures increase in the spring and the balance between the heterotrophic microorganisms (capable of producing these complex organic compounds) and methanogenic bacteria becomes reestablished.

The literature review did not produce any emission factor data for VOC. However, based on the recognition that no biological process is 100 percent efficient, some nominal level of VOC should be emitted from anaerobic lagoons and a somewhat higher level from storage ponds. To

provide some sense of the possible magnitude of VOC emissions, the VOC emissions for anaerobic lagoons were calculated, based on professional judgement, as one percent of the methane production potential of these manures. The one-percent value was used for anaerobic lagoons for swine, dairy, and wet layer manures. The methane producing capacity of animal manure is discussed in section 8.2.4. Volatile organic compound emissions were calculated as shown in equation 8.5:

$$VOC_{emitted} = VS_{excreted} \times B_0 \times 0.67 \times 0.01 \qquad (8.5)$$

Where,

$VOC_{emitted}$	=	VOC emitted (kg/animal unit-year).
$VS_{excreted}$	=	Volatile solids excreted (kg/animal unit-year).
B_0	=	Methane production potential (m^3 CH_4/kg VS).
0.67	=	Methane density at 20 °C, 1 atmosphere (kg/m^3).
0.01	=	Fraction of the methane production potential emitted as VOC.

It is clear that VOC is emitted in more significant quantities from confinement facilities (especially those with integral manure storage tanks), manure storage tanks and ponds, solid manure storage facilities, and manure application sites. However, any attempt to estimate possible VOC emissions from these sources is difficult because of the absence of any reasonable basis for estimating methane production potential. The approach for anaerobic lagoons was based on the judgement that the destruction of readily biodegradable volatile solids is essentially complete. For potential sources of VOC other than anaerobic lagoons, that assumption would not be valid because stabilization is not an objective of these manure storage facilities. Moreover, the degree of biodegradable volatile solids destruction occurring could vary significantly among these sources given differences in times of storage and other factors. Thus, it was concluded that no defensible estimates of emissions from these sources were possible.

8.3 Estimation of Nitrogen, Sulfur, And Volatile Solids in Manure

The development of some emission factors required an estimate of the mass of precursors in manure. The maximum possible levels of ammonia, nitrous oxide, and hydrogen sulfide emissions from animal manures are limited by the quantities of nitrogen, volatile solids (carbon), and sulfur that are available for microbial transformation (i.e., precursors). Estimates of excretion rates of these precursors were used to compute emissions directly, convert units of measure, or translate an emission factor from one animal sector to another. The average daily excretion rates of nitrogen, sulfur, and volatile solids for each animal type are discussed in 8.3.1. Section 8.3.2 explains how the daily rates were converted to annual rates for a model farm based on the production practices of the different animal sectors.

8.3.1 Daily Nitrogen, Sulfur, and Volatile Solids Excretion Rates

The characteristics of livestock and poultry manures differ significantly reflecting differences in nutritional requirements and feeding programs designed to satisfy these requirements. These differences exist not only among species but also within individual species maintained for different purposes. For example, concentrations of nitrogen, sulfur, and organic carbon estimated using volatile solids as a surrogate, differ significantly between broiler type chickens and laying hens. Even within the same species and breed or genetic strain maintained for the same purpose, manure characteristics may differ significantly due to diet, climate, or physiological differences. These differences in feed conversion efficiency are a reflection of both genetic potential and animal management practices.

To estimate the amount of nitrogen, sulfur, and volatile solids excreted annually, assumptions about typical rates of excretion were necessary. The two primary sources of such information are the American Society of Agricultural Engineers (ASAE) and the Natural Resources Conservation Service (NRCS). While there is general agreement among these sources, it is not clear that either represents typical excretion rates. For example, the background documentation for the estimates presented in both sources was not available. Therefore, it could not be determined if the values reflect current production practices. Additionally, there was no

information available on the number of point estimates included. For some parameters, the standard deviations, and therefore the coefficients of variation, are substantial (e.g., 20 percent for the sulfur content of dairy cow manure). Given the lack of background information, the source of variation is unclear. It could be due to changes in feeding practices with time, a reflection of a limited data base with one or more outliers skewing the mean, or the factors discussed previously in this section. Despite concerns about their representativeness, the ASAE and NRCS data were used for this study because no other information were available. The ASAE and NRCS data were assumed to be derived from point estimates that are normally distributed and that they would provide reasonable estimates of daily excretion rates per unit of live weight. Waste streams other than manure (e.g., wash waters) were considered to be nominal sources and were not estimated.

The NRCS (USDA, 1992) data base was used to estimate nitrogen and volatile solids excretion rates because it allowed estimates for different stages in swine and dairy production cycles. Because no sulfur excretion rates are available in the NRCS data base, the ASAE (ASAE, 1999) values were used for sulfur. The excretion rates are listed in Table 8-8.

8.3.2 Calculation of Nitrogen, Sulfur, and Volatile Solids Excreted Annually

The mass of nitrogen, volatile solids, and sulfur excreted annually was computed for each animal sector using equation 8.6:

$$M_{s,a} = LW \times R_{a/au} \times ER_s \times P \times T \qquad (8.6)$$

Where,

$M_{s,a}$ = Quantity of substance S excreted from animal A (lb/animal unit-yr).

LW = Average live weight of animal (lb/animal).

ER_s = Excretion rate of substance S (lb/lb LW-day).

P = Number of production cycles per year.

Table 8-8.

Rates of Nitrogen, Volatile Solids, and Sulfur Excretion By Livestock and Poultry, lb per day per 1,000 lb live weight

Species	Nitrogen[b]	Volatile Solids[b]	Sulfur[c]
Poultry			
Broilers	1.10	15.00	0.085
Laying hens	0.83	10.80	0.14
Turkeys	0.74	9.70	ND[a]
Swine			
Feeder pigs[d]	0.42	5.40	0.078
Nursery pigs	0.60	8.80	ND
Gestating sows	0.19	2.13	ND
Lactating sows	0.47	5.40	ND
Gilts	0.24	2.92	ND
Boars	0.15	1.70	ND
Dairy Cattle			
Lactating	0.45	8.50	0.051
Dry	0.36	8.10	ND
Replacements	0.31	7.77	ND
Veal Calves	0.20	0.85	ND
Beef Cattle			
Feeder	0.30	5.44	0.046

[a] No data.
[b] USDA, 1992
[c] ASAE, 1999
[d] For grow-finish operations.

T = Days per production cycle.

$R_{a/au}$ = Number of animals per AU.

The values used for average live weights, lengths of production cycles, and numbers of production cycles per year are presented in Table 8-9 (Ensminger and Olentine, 1978; North and Bell, 1990; USEPA, 2000).

The excretion rates over a one year period for a 500 animal unit confinement facility are summarized in Table 8-10. These estimates were derived from a direct application of equation 8.6, except for the turkey and dairy model farms.

For the turkey model farms, it was necessary to reflect the differences between male (tom) and female (hen) turkeys in average live weights and lengths of production cycles (Table 8-9). The values for males and females were calculated separately and then averaged based on the assumption of equal numbers of males and females in a flock.

The computational process for dairy cattle was more complex. Due to differences in feeding programs, the generation rate of manure constituents had to be calculated separately for mature cows and replacements (heifers and calves), and then combined. Similarly, for mature cows, the generation rates for lactating cows and dry cows were calculated separately and then combined. A 500 AU model dairy farm will have the equivalent of 350 mature cows. As discussed in Chapter 4.0, 25 percent of mature cows are replaced each year; resulting in 280 mature cows and 70 replacements (expressed as mature cows). Table 8-9 shows that the average live weight of a replacement is approximately half that of a mature cow, indicating that one mature cow is equivalent to 2 replacements. For a 500 AU model farm, this results in 140 replacements and 280 mature cows, or 420 total animals. A typical period of lactation for mature cows of 335 days per year followed by a dry period of 30 days was used (Ensminger and Olentine, 1978; Van Horn, 1998). Calculations were based on there being no difference in live weight between the two periods (See Table 8-9). Because a new period of lactation typically begins every 12 months, there is one production cycle per year.

Table 8-9.

Typical Animal Live Weights and Production Cycles[a]

Animal Species (Subtypes)	Average live weight lb/animal-day	Length of Production Cycle, Days	Number of Production Cycles Per Year
Broilers	2.60	49	5.5
Laying Hens	3.97	350	1
Turkeys			
Hens	11.5	105	2
Toms	16.8	133	2
Swine			
Feeder pigs[c]	154	119	2.8
Nursery pigs	37	35	1.7 to 8-9[b]
Gestating sows	452	185	1.7
Lactating sows	496	30	1.7
Gilts	249	190	1
Boars	396	365	1
Dairy Cattle			
Lactating (>24 mo)	1,350	335	1
Dry (> 24 mo)	1,350	30	1
Replacements (0 to 24 mo)	634	365	1
Veal calves	139	56	6
Beef Cattle			
Feeder (6 to 12 mo.)	815	180	2

[a]Ensminger and Olentine, 1978; North and Bell, 1990; USEPA, 2000
[b]Eight to nine production cycles per year for stand alone nursery operations.
[c]For grow-finish operations.

Table 8-10.

Quantities of Volatile Solids, Nitrogen, and Sulfur Excreted Per 500 Animal Unit Model Farm

Animal	Composition of Animal Manure as Excreted (tons/yr)		
	Volatile Solids	Nitrogen	Sulfur
Beef	399	22	3
Veal	10	3	0
Dairy[a]	705	35	4
Swine-feeder pigs	173	14	3
Poultry-broiler	262	20	1.5
Poultry-layer	374	28	4
Poultry-turkey[b]	375	29	0

[a] Based on replacing 25 percent of mature cow population each year.
[b] 50 percent of population are toms, and 50 percent are hens.

For swine, there are significant differences in the rates of excretion of nitrogen and volatile solids between gestating sows, lactating sows and nursery pigs (Table 8-8). Due to the complexity and variety of configurations of swine farrow-to-finish and nursery operations, an accurate distribution of the different pig subtypes in a model swine farm could not be determined. Therefore, swine model farms were designed to represent grow-finish operations, and the information for feeder pigs was used. The other swine subtypes are shown only for informational purposes.

8.4 Emission Factors and Estimates from Model Farms

This section presents the emission factors and estimated emissions for each model farm. The model farms are summarized in Appendix G. Emissions were estimated only from emission sources that are related to manure management and animal related activities (e.g., feeding, housing). Emissions from trucks, tractors, and other farm equipment as well as those related to the generation of electricity were not considered.

Emissions were estimated for NH_3, N_2O, H_2S, VOC, and PM. In this report, PM represents total suspended particulate, except where specifically noted at PM 10. Information was not available to estimate emissions of total or speciated HAP, TRS or PM 2.5. Similarly, information was not available to quantify emissions of odor causing compounds other than H_2S and VOC.

Emissions were computed for model farms with a confinement capacity of 500 animal units. Confinement capacity is the maximum number of animals that be confined at one time. Based on the EPA Office of Water definition, 500 AUs are equal to:

- 500 cattle, excluding mature dairy cattle and veal;
- 350 mature dairy cattle;
- 500 veal;
- 1,250 swine each weighing over 55 pounds;
- 5,000 immature swine each weighing less than 55 pounds;
- 27,500 turkeys; and
- 50,000 chickens

The study results are presented in two tables for each animal type. The first table summarizes the emission factors used for each emission point. The table indicates the range of emission factors from the literature, the number of emission factors, and the average and median of the emission factors found. Median values are provided as an indication of how normally the data points were distributed (i.e., a median significantly different than the average would indicate the presence of "outliers" in the data used for the emission factor). The table also identifies the references for each emission factor and the methodology used to estimate emissions where emission factors were not available. The second table presents the annual emission estimates for each model farm. Annual emissions were calculated by multiplying the average emission factor (lb/year-AU) by 500 (animal unit capacity of the model farms) and correcting to tons per year. Where emission factors are not presented, the table indicates elements where (1) emissions are

expected to be negligible and (2) emissions are expected, but could not be estimated because of a lack of useable data. Appendix D presents the emissions information that was not used and the reasons for not including the information in the development of emission factors.

For land application, the emission estimates represent short-term releases that occur from the application of manure to land. No information was found for estimating residual emissions from manure application sites over the long term following application (i.e., soil releases). Typically, the most prominent soil release will be N_2O. However, if manure is applied at agronomic rates, N_2O emissions should be the same as if inorganic commercial fertilizers are applied. Conditions on farm land generally do not favor the formation of methane, H_2S, or VOC except under transient conditions (e.g., extended rainfall) when saturated soil and warm temperatures promote microbial activity.

8.4.1 Beef Model Farms

Beef cattle emission factors and emission estimates for the two beef cattle model farms are summarized in Tables 8-11 and 8-12, respectively. Emission factors from the literature search were used to estimate ammonia emissions from drylots, stockpiles, and solid manure land application activities. Emission factors also were found for PM 10 emissions from drylots. Nitrous oxide emissions from the drylot, storage pond, and stockpile were calculated assuming that a fraction of the nitrogen in manure would be emitted as nitrous oxide, using the methodology and information presented in Section 8.2.2.

8.4.2 Veal Model Farms

No emission factors were identified for veal operations from the literature search. Emission factor for nitrous oxide and VOC from anaerobic lagoons (Table 13) were derived based on a fraction emitted of the nitrogen and volatile solids in the manure, using the methodologies in Section 8.2.2 and 8.2.5. Estimates of hydrogen sulfide emissions could have been made by translating emissions from anaerobic lagoons at swine model farms, as discussed in Section 8.2.3, but no information on the sulfur content of veal manure was available to apply

Table 8-11.

Summary of Beef Emission Factors

Emission Source	Substance	Emission Factor Range (lb/yr-AU)	Number of Emission Factors	Average/Median Emission Factor (lb/yr-AU)	References
Drylot	NH_3	9.7 - 41.4	3	22.0/25.6	European Environmental Agency, 1999; Grelinger, 1997; Hutchinson, et al., 1982.
	N_2O	—	—	2.8	a
	PM 10	5.4 - 20.0	2	12.7/12.7	USDA, 2000; Grelinger, 1997
Storage pond	N_2O	—	—	0.14	a
Stockpile	NH_3	4.2	1	4.2/4.2	European Environmental Agency, 1999
	N_2O	—	—	2.8	a
Solid manure spreader	NH_3	8.0 - 38.2	5	18.8/23.1	USEPA, 1999; Van der Hoek, 1998.

[a] Calculated using a nitrogen in manure to nitrous oxide conversion factor. See section 8.2.2.

Table 8-12.

Summary of Emissions from Beef Model Farms (tons/yr-500 AU farm)

Model ID	Emission Source	NH_3	N_2O	H_2S	VOC	PM10
B1	Drylot	5.5	0.7	Neg.[a]	Neg.[a]	3.2
	Solids separation	Neg.[a]	Neg.[a]	Neg.[a]	Neg.[a]	Neg.[a]
	Storage pond	Neg.[a]	Neg.[a]	b	b	Neg.[a]
	Liquid manure land application	b	b	b	b	Neg.[a]
	Stockpile	1.0	0.7	c	c	c
	Solid manure land application	4.7	b	c	c	c
	Total	**11.2**	**1.4**	**b**	**b**	**3.2**
B2	Drylot	5.5	0.7	Neg.[a]	Neg.[a]	3.2
	Storage pond	Neg.[a]	Neg.[a]	b	b	Neg.[a]
	Liquid manure land application	Neg.[a]	Neg.[a]	b	Neg.[a]	Neg.[a]
	Stockpile	1.0	0.7	c	c	c

Table 8-12.

Summary of Emissions from Beef Model Farms (tons/yr-500 AU farm) (Continued)

Model ID	Emission Source	NH_3	N_2O	H_2S	VOC	PM10
B2	Solid manure land application	4.7	b	c	c	c
(Continued)	**Total**	**11.2**	**1.4**	**b**	**b**	**3.2**

[a] No emissions or negligible emissions are expected from this emission source.
[b] Emissions are expected from this source, but information is not available for estimation.
[c] Emissions may occur from this source depending on whether manure is dry (PM, N_2O) or wet (NH_3, H_2S, VOC). Information is not available to estimate emissions.

Table 8-13.

Summary of Veal Emission Factors

Emission Source	Substance	Emission Factor Range (lb/yr-AU)	Number of Emission Factors	Average Emission Factor (lb/yr-AU)	References
Anaerobic lagoon	N_2O	—	—	0.02	a
	VOC	—	—	0.08	b

[a] Calculated using a nitrogen in manure to nitrous oxide conversion factor. See Section 8.2.2.
[b] Calculated using a volatile solids to VOC conversion factor. See Section 8.2.5.

the hydrogen sulfide ratios to veal. Table 8-14 summarizes the emission estimate for the two veal model farms.

8.4.3 Dairy Model Farms

Dairy cattle emission factors and emission estimates for the eight dairy model farms are summarized in Tables 8-15 and 8-16, respectively.

Emission factors were developed from literature sources for ammonia emissions from scrape freestall barns, drylots, liquid manure land application activities, and solids storage. Emission factors also were found for PM emissions from drylots.

Table 8-14.

Summary of Emissions from Veal Model Farms (tons/year-500 AU farm)

Model ID	Emission Source	NH_3	N_2O	H_2S	VOC	PM
V1	Confinement (flush)	Neg.[a]	Neg.[a]	Neg.[a]	Neg.[a]	Neg.[a]
	Anaerobic lagoon	b	0.005	b	0.02	Neg.[a]
	Liquid manure land application	b	b	b	b	Neg.[a]
	Total	b	0.005	b	0.02	—
V2	Confinement w/pit storage	b	Neg.[a]	b	b	Neg.[a]
	Liquid manure land application	b	b	b	b	Neg.[a]
	Total	b	b	b	b	Neg.[a]

[a] No emissions or negligible emissions are expected from the this emission point.
[b] Emissions are expected, but information is not available to estimate emissions.

Ammonia emissions from flush barns and anaerobic lagoons were derived by translating emissions from comparable swine operations, using the methodology and assumptions presented in Section 8.2.1. The, hydrogen sulfide emission factor for anaerobic lagoons was derived by the same method.

Nitrous oxide emissions from the drylot, storage pond and anaerobic lagoons were estimated by calculating a fraction of the nitrogen in manure that would be emitted as nitrous oxide, using the methodology and information presented in Section 8.2.2. Volatile organic compound emissions were estimated for anaerobic lagoons based on a fraction of the potential methane emissions being converted to VOC, using the methodology and information presented in Section 8.2.5.

Table 8-15.

Summary of Dairy Emission Factors

Emission Source	Substance	Emission Factor Range (lb/yr-AU)	Number of Emission Factors	Average/Median Emission Factor (lb/yr-AU)	References
Freestall barn (flush)	NH_3	—	—	28	d
Freestall barn (scrape)	NH_3	15.2 - 16.8	2	16.0/16.0	Demmers, et al., 2001; University of Minnesota, 1999.
Drylot	NH_3	4.5 - 13.4	3	10.2/9.0	Bouwman, et al., 1997; Misselbrook, et al., 1998; Van der Hoek, 1998.
	N_2O	—	—	4.4	a
	PM	2.3	1	2.3/2.3	USDA, 2000
Anaerobic lagoon	NH_3	—	—	40	b
	N_2O	—	—	0.22	a
	H_2S	—	—	15.7[e], 4.1[f]	b
	VOC	—	—	4.5	c
Storage pond	N_2O	—	—	0.22	a
Liquid manure land application	NH_3	18.7	1	18.7/18.7	Van der Hoek, 1998.
Solids storage	NH_3	5.9	1	5.9/5.9	Van der Hoek, 1998.
	N_2O	—	—	4.4	a

[a] Calculated using a nitrogen in manure to nitrous oxide conversion factor. See Section 8.2.2.
[b] Calculated by transferring emissions from swine anaerobic lagoons. See Sections 8.2.1, 8.2.3, and Appendix E.
[c] Calculated using a volatile solids to VOC conversion factor. See Section 8.2.5.
[d] Calculated by transferring emissions from swine flush houses. See Appendix E for calculations.
[e] Used for model farms D1A, D1B, D4A and D4B; data was transferred from anaerobic lagoons following flush houses for swine.
[f] Used for model farms and D2A and S2B; data was transferred from anaerobic lagoons not following flush houses for swine.

Table 8-16.

Summary of Emissions from Dairy Model Farms (tons/yr-500 AU farm)

Model ID	Emission Source	NH_3	N_2O	H_2S	VOC	PM
D1A	Drylot	2.5	1.1	Neg.[a]	Neg.[a]	0.6
	Freestall barn (flush)	7.0	Neg.[a]	Neg.[a]	Neg.[a]	Neg.[a]
	Milking center	Neg.[a]	Neg.[a]	Neg.[a]	Neg.[a]	Neg.[a]
	Solids separation	Neg.[a]	Neg.[a]	Neg.[a]	Neg.[a]	Neg.[a]
	Anaerobic lagoon	10.0	0.1	3.9	1.1	Neg.[a]
	Liquid manure land application	4.7	b	b	b	Neg.[a]
	Stockpile	1.5	1.1	c	c	c
	Solid manure land application	b	b	c	c	c
	Total	**26**	**2.3**	**3.9**	**1.1**	**0.6**
D1B	Drylot	2.5	1.1	Neg.[a]	Neg.[a]	0.6
	Freestall barn (flush)	7.0	Neg.[a]	Neg.[a]	Neg.[a]	Neg.[a]
	Milking center	Neg.[a]	Neg.[a]	Neg.[a]	Neg.[a]	Neg.[a]
	Anaerobic lagoon	10.0	0.1	3.9	1.1	Neg.[a]
	Liquid manure land application	4.7	b	b	b	Neg.[a]
	Stockpile	1.5	1.1	c	c	c
	Solid manure land application	b	b	c	c	c
	Total	**26**	**2.3**	**3.9**	**1.1**	**0.6**
D2A	Drylot	2.5	1.1	Neg.[a]	Neg.[a]	0.6
	Freestall barn (scrape)	4.0	Neg.[a]	Neg.[a]	Neg.[a]	Neg.[a]
	Milking center	Neg.[a]	Neg.[a]	Neg.[a]	Neg.[a]	Neg.[a]
	Solids separation	Neg.[a]	Neg.[a]	Neg.[a]	Neg.[a]	Neg.[a]
	Anaerobic lagoon	10.0	0.1	1.0	1.1	Neg.[a]
	Liquid manure land application	4.7	b	b	b	Neg.[a]
	Stockpile	1.5	1.1	c	c	c

Table 8-16.

Summary of Emissions from Dairy Model Farms (tons/yr-500 AU farm) (Continued)

Model ID	Emission Source	NH_3	N_2O	H_2S	VOC	PM
D2A (Continued)	Solid manure land application	b	b	c	c	c
	Total	**23**	**2.3**	**1.0**	**1.1**	**0.6**
D2B	Drylot	2.5	1.1	Neg.[a]	Neg.[a]	0.6
	Freestall barn (scrape)	4.0	Neg.[a]	Neg.[a]	Neg.[a]	Neg.[a]
	Milking center	Neg.[a]	Neg.[a]	Neg.[a]	Neg.[a]	Neg.[a]
	Anaerobic lagoon	10.0	0.1	1.0	1.1	Neg.[a]
	Liquid manure land application	4.7	b	b	b	Neg.[a]
	Stockpile	1.5	1.1	c	c	c
	Solid Manure land application	b	b	c	c	c
	Total	**23**	**2.3**	**1.0**	**1.1**	**0.6**
D3A	Drylot	2.5	1.1	Neg.[a]	Neg.[a]	0.6
	Milking center	Neg.[a]	Neg.[a]	Neg.[a]	Neg.[a]	Neg.[a]
	Solids separation	Neg.[a]	Neg.[a]	Neg.[a]	Neg.[a]	Neg.[a]
	Storage pond	b	0.1	b	b	Neg.[a]
	Liquid manure land application	4.7	b	b	b	Neg.[a]
	Stockpile	1.5	1.1	c	c	c
	Solid manure land application	b	b	c	c	c
	Total	**8.7**	**2.3**	**b**	**b**	**0.6**
D3B	Drylot	2.5	1.1	Neg.[a]	Neg.[a]	0.6
	Milking center	Neg.[a]	Neg.[a]	Neg.[a]	Neg.[a]	Neg.[a]
	Storage pond	b	0.1	b	b	Neg.[a]
	Liquid manure land application	4.7	b	b	b	Neg.[a]
	Stockpile	1.5	1.1	c	c	c
	Solid manure land application	b	b	c	c	c

Table 8-16.

Summary of Emissions from Dairy Model Farms (tons/yr-500 AU farm) (Continued)

Model ID	Emission Source	NH_3	N_2O	H_2S	VOC	PM
D3B (Continued)	**Total**	**8.7**	**2.3**	**b**	**b**	**0.6**
D4A	Drylot	2.5	1.1	Neg.[a]	Neg.[a]	0.6
	Drylot feed alley (flush)	b	Neg.[a]	Neg.[a]	Neg.[a]	Neg.[a]
	Milking center	Neg.[a]	Neg.[a]	Neg.[a]	Neg.[a]	Neg.[a]
	Solids separation	Neg.[a]	Neg.[a]	Neg.[a]	Neg.[a]	Neg.[a]
	Anaerobic lagoon	10.0	0.1	3.9	1.1	Neg.[a]
	Liquid manure land application	4.7	b	b	b	Neg.[a]
	Stockpile	1.5	1.1	c	c	c
	Solid manure land application	b	b	c	c	c
	Total	**19**	**2.3**	**3.9**	**1.1**	**0.6**
D4B	Drylot	2.5	1.1	Neg.[a]	Neg.[a]	0.6
	Drylot feed alley (flush)	b	Neg.[a]	Neg.[a]	Neg.[a]	Neg.[a]
	Milking center	Neg.[a]	Neg.[a]	Neg.[a]	Neg.[a]	Neg.[a]
	Anaerobic lagoon	10.0	0.1	3.9	1.1	Neg.[a]
	Liquid manure land application	4.7	b	b	b	Neg.[a]
	Stockpile	1.5	1.1	c	c	c
	Solid Manure land application	b	b	c	c	c
	Total	**19**	**2.3**	**3.9**	**1.1**	**0.6**

[a] No emissions or negligible emissions are expected.
[b] Emissions are expected from this operation, but information is not available to estimate it.
[c] Emissions may occur from this operation depending on whether manure is dry (PM, N_2O) or wet (NH_3, H_2S,VOC). Information is not available to estimate emissions.

8.4.4 Swine Model Farms

Swine emission factors developed for this study and emission estimates for the five model swine farms are summarized in Tables 8-17 and 8-18, respectively. Emission factors were developed from literature sources for ammonia, PM, and hydrogen sulfide. Emission factors from the literature search were used to estimate ammonia emissions from flush houses, houses with pit storage, houses with pull plug pits, houses using pit recharge, anaerobic lagoons, and liquid land application activities.

The same PM emission factor was used for each of the different swine confinement houses because the majority of PM would come from feed handling, which would be the same for all the swine confinement houses. Hydrogen sulfide emission factors were developed from the literature for the house with pit storage, anaerobic lagoon, and liquid land application activities.

Nitrous oxide emissions from the anaerobic lagoon and external storage, were calculated based on a fraction of the nitrogen in manure being emitted as nitrous oxide, using the methodology and information presented in Section 8.2.2. Volatile organic compound emissions were estimated for anaerobic lagoons based on a fraction of the potential methane emissions being converted to VOC, using the methodology and information presented in Section 8.2.5.

8.4.5 Poultry Model Farms

Poultry emission factors developed for this study and emission estimates for the six poultry model farms are summarized in Tables 8-19 and 8-20, respectively. Emission factors from the literature search were used to estimate ammonia emissions from (1) broiler and turkey housing, manure storage, and solid manure land application, and (2) layer flush houses, high-rise houses, solid manure land application, and liquid manure land application. The ammonia emission factor for broiler houses was used for turkey houses due to the similarity in houses, manure, and manure handling activities. The references that provided ammonia emission factors for cake and litter storage did not distinguish between the covered storage of cake and the open

Table 8-17.

Summary of Swine Emission Factors

Emission Source	Substance	Emission Factor Range (lb/yr-AU)	Number of Emission Factors	Average/ Median Emission Factor (lb/yr-AU)	References
Flush House	NH_3	6.4 - 17.1	3	10.3/11.8	Hoeksma and Monteny, 1993; Oosthoek, et al., 1991.
	PM	4.6 - 13.0	3	8.0/8.8	Grelinger and Page, 1999; Takai, et al., 1998.
House w/pit recharge	NH_3	10.8 - 17.1	2	14.0/14.0	Oosthoek, et al., 1991; University of Minnesota, 1999.
	PM	4.6 - 13.0	3	8.0/8.8	Grelinger and Page, 1999; Takai, et al., 1998.
House w/pull plug pit	NH_3	9.1 - 16.5	3	13.7/12.8	Andersson, 1998; Hoeksma and Monteny, 1993; Oosthoek, et al., 1991.
	PM	4.6 - 13.0	3	8.0/8.8	Grelinger and Page, 1999; Takai, et al., 1998.
House w/pit storage	NH_3	0.6 - 44.6	15	17.2/22.6	Andersson, 1998; Hoeksma and Monteny, 1993; Ni, et al., 2000; Oosthoek, et al., 1991; Secrest, 2000; USDA, 2000; USEPA, 1994; Zhu, et al., 2000.
	H_2S	0.01 - 5.4	7	1.4/2.7	Jacobson, et al., 1999; Ni, et al., 2000; Pedersen, et al., 2000; USDA, 2000; Zhu et al., 2000.
	PM	4.6 - 13.0	3	8.0/8.8	Grelinger and Page, 1999; Takai, et al., 1998.
Anaerobic lagoon	NH_3	2.8 - 39.4[a]	9	15.1/21.1	Aneja, et al., 2000; Cure, et al., 1999; Harper and Sharp, 1998; Martin, 2000[g]; NCDENR[f].
	N_2O	—	—	0.085	d
	H_2S	0.8 - 9.8	5	9.8/9.8[b], 2.6/2.9[c]	Grelinger and Page, 1999; Secrest, 2000.
	VOC	—	—	2.4	e
Liquid land application	NH_3	20.9 - 44.3	5	29.4/32.6	USEPA, 1994; Van der Hoek, 1998.

Table 8-17.

Summary of Swine Emission Factors (Continued)

Emission Source	Substance	Emission Factor Range (lb/yr-AU)	Number of Emission Factors	Average/ Median Emission Factor (lb/yr-AU)	References
Liquid land application (continued)	H_2S	0.6	1	0.6/0.6	Grelinger and Page, 1999
External Storage	N_2O	—	—	0.085	d

[a] Three of the emissions factors were reported as nitrogen and converted to ammonia, assuming all nitrogen was ammonia.
[b] Used for model farm S1 because emission factor is for anaerobic lagoon following a flush house.
[c] Used for model farm S2 and S3A because emission factors were representative of anaerobic lagoons not following a flush house.
[d] Calculated using nitrogen in manure to nitrous oxide conversion factor. See Section 8.2.2.
[e] Calculated using a volatile solids in manure to VOC conversion factor. See Section 8.2.5.
[f] Report did not provide background test data.
[g] Based on a mass balance completed from tests of an anaerobic lagoon, showing 63.6% loss of total , kjeldahl nitrogen input.

Table 8-18.

Summary of Emissions from Swine Model Farms (tons/yr-500 AU farm)

Model ID	Emission Source	NH_3	N_2O	H_2S	VOC	PM
S1	Flush house	2.6	Neg.[a]	Neg.[a]	Neg.	2.0
	Anaerobic lagoon	4.6	0.021	2.4	0.6	Neg.[a]
	Liquid manure land application	7.3	b	0.15	b	Neg.[a]
	Total	**15**	**0.021**	**2.6**	**0.6**	**2.0**
S2	House w/pit recharge	3.5	Neg.[a]	b	b	2.0
	Anaerobic lagoon	4.6	0.021	0.7	0.6	Neg.[a]
	Liquid manure land application	7.3	b	0.15	b	Neg.[a]
	Total	**15**	**0.021**	**0.9**	**0.6**	**2.0**
S3A	House w/pull plug pit	3.4	Neg.[a]	b	b	2.0
	Anaerobic lagoon	4.6	0.021	0.7	0.6	Neg.[a]

Table 8-18.

Summary of Emissions from Swine Model Farms (tons/yr-500 AU farm) (Continued)

Model ID	Emission Source	NH_3	N_2O	H_2S	VOC	PM
S3A (Continued)	Liquid manure land application	7.3	b	0.15	b	Neg.[a]
	Total	**15**	**0.021**	**0.9**	**0.6**	**2.0**
S3B	House w/pull plug pit	3.4	Neg.[a]	b	b	2.0
	External storage	b	0.021	b	b	Neg.[a]
	Liquid manure land application	7.3	b	b	b	Neg.[a]
	Total	**11**	**0.021**	**b**	**b**	**2.0**
S4	House w/pit storage	4.3	0.021	0.3	b	2.0
	Liquid manure land application	7.3	Neg.[a]	b	b	Neg.[a]
	Total	**12**	**0.021**	**0.3**	**b**	**2.0**

[a] No emissions or negligible emissions are expected.
[b] Emissions are expected, but information is not available to estimate emissions.

Table 8-19.

Summary of Poultry Emission Factors

Animal Feeding Operation	Substance	Emission Factor Range (lb/yr-AU)	Number Emission Factors	Average/Median Emission Factor (lb/yr-AU)	References
Broiler house with bedding	NH_3	10 - 51	8	24.3/31	Groot Koerkamp, et al., 1998; Kroodsma et al., 1988; Tamminga, 1992; USEPA, 1994; Van der Hoek, 1998; Zhu et al., 2000.
	N_2O	—	—	2.4	a
	PM	2.9 - 14	2	8.2/8.2	Grub, et al, 1965 Takai et al., 1998.

Table 8-19.

Summary of Poultry Emission Factors (Continued)

Animal Feeding Operation	Substance	Emission Factor Range (lb/yr-AU)	Number Emission Factors	Average/Median Emission Factor (lb/yr-AU)	References
Broiler covered storage of cake	NH_3	2.2	1	2.2/2.2	Van der Hoek, 1998 [e]
	N_2O	—	—	2.4	a
Broiler open litter storage	NH_3	2.2	1	2.2/2.2	Van der Hoek, 1998 [e]
	N_2O	—	—	2.4	a
Broiler solid manure land application	NH_3	22 - 24	2	23/23	Van der Hoek, 1998; USEPA, 1994.
Caged layer flush house	NH_3	16.5 - 44	6	32.8/30.3	Groot Koerkamp et al., 1998; Kroodsma, et al., 1988; Tamminga, 1992; Van der Hoek, 1998; USEPA, 1994.
	N_2O	—	—	0.2	a
Layer high-rise house	NH_3	13.1 - 44	8	28.5/28.6	Groot Koerkamp, et al., 1998; Hartung and Phillips, 1994; Kroodsma, et al., 1988; Tamminga, 1992; USEPA, 1994; Valli et al., 1991; Van der Hoek, 1998.
	N_2O	—	—	3.6	a
Layer solid manure land application	NH_3	11.1 - 36	4	24/24	USEPA, 1994; Van der Hoek, 1998; Witter, 1991.
Layer anaerobic lagoon	NH_3	—	—	32	b
	N_2O	—	—	0.02	a
	H_2S	—	—	4.9	b
	VOC	—	—	4	c
Layer liquid manure land application	NH_3	11.1 - 36	4	24/24	USEPA, 1994; Van der Hoek, 1998; Witter, 1991.

Table 8-19.

Summary of Poultry Emission Factors (Continued)

Animal Feeding Operation	Substance	Emission Factor Range (lb/yr-AU)	Number Emission Factors	Average/Median Emission Factor (lb/yr-AU)	References
Turkey house w/bedding	NH_3	—	—	44	d
	N_2O	—	—	3.6	a
	PM	1.4 - 36	2	18.7/18.7	Grub, et al., 1965; Takai, et al., 1998.
Turkey covered storage	NH_3	7	1	7	Van der Hoek, 1998
	N_2O	—	—	3.6	a
Turkey open litter storage	NH_3	7	1	7	Van der Hoek, 1998
	N_2O	—	—	3.6	a
Turkey solid manure land application	NH_3	46- 65	2	55/55	USEPA, 1994; Van der Hoek, 1998.

[a] Calculated using a nitrogen in manure to nitrous oxide conversion factor. See Section 8.2.2.
[b] Calculated by transferring emissions from swine models. See Sections 8.2.1, 8.2.3 and Appendix E.
[c] Calculated using a volatile solids in manure to VOC conversion factor. See Section 8.2.5.
[d] Calculated by transferring emission factors from broiler house. See Section 8.2.1 and Appendix E.
[e] References provided emission factors for cake and litter storage, but did not distinguish between the covered storage of cake and the open storage of litter. Given that there was no basis to partition the emission factors, it was judged that equal amounts of ammonia would be emitted from both types of storage. Half the emission factor was assigned to covered storage and half to open litter storage.

Table 8-20.

Summary of Emissions from Poultry Model Farms (tons/yr-500 AU farm)

Model ID	Emission Source	NH_3	N_2O	H_2S	VOC	PM
C1A	Broiler House w/bedding	6.1	0.60	Neg.[a]	Neg.[a]	2.1
	Covered storage of cake	0.55	0.60	Neg.[a]	Neg.[a]	Neg.[a]
	Open litter storage	0.55	0.60	c	c	c
	Solid manure land application	5.8	b	c	c	c
	Total	**13.0**	**1.8**	**c**	**c**	**2.1**

Table 8-20.

Summary of Emissions from Poultry Model Farms (Continued)

Model ID	Emission Source	NH_3	N_2O	H_2S	VOC	PM
C1B	Broiler House w/bedding	6.1	0.60	Neg.[a]	Neg.[a]	2.1
	Covered storage of cake	0.55	0.60	Neg.[a]	Neg.[a]	Neg.[a]
	Solid manure land application	5.8	b	c	c	c
	Total	**13**	**1.2**	**c**	**c**	**2.1**
C2 (Continued)	Caged layer high rise house	7.1	0.90	Neg.[a]	Neg.[a]	b
	Solid manure land application	5.9	b	Neg.[a]	Neg.[a]	b
	Total	**13**	**0.90**	**Neg.[a]**	**Neg.[a]**	**b**
C3	Caged layer flush house	8.2	0.046	b	b	b
	Anaerobic lagoon	8.0	0.046	1.2	0.98	Neg.[a]
	Liquid manure land application	5.9	Neg.[a]	b	b	Neg.[a]
	Total	**22**	**0.092**	**1.2**	**0.98**	**b**
T1A	Turkey House w/bedding	11	0.90	Neg.[a]	Neg.[a]	4.7
	Covered storage of cake	0.9	0.90	Neg.[a]	Neg.[a]	Neg.[a]
	Open litter storage	0.9	0.90	c	c	c
	Solid manure land application	14	b	c	c	c
	Total	**27**	**2.7**	**c**	**c**	**4.7**
T1B	Turkey House w/bedding	11	0.90	Neg.[a]	Neg.[a]	4.7
	Covered storage of cake	0.9	0.90	Neg.[a]	Neg.[a]	Neg.[a]
	Solid manure land application	14	b	c	c	c
	Total	**26**	**1.8**	**c**	**c**	**4.7**

[a] No emissions or negligible emissions are expected.
[b] Emissions are expected, but information is not available to estimate emissions.
[c] Emissions may occur depending on whether manure is dry (PM, N_2O) or wet (NH_3, H_2S, VOC). Information is not available to estimate emissions.

storage of litter. Given that there was no basis by which the emission factor could be partitioned, it was judged that equal amounts of ammonia would be emitted from both types of storage. Therefore, the emission factors for covered storage and open storage were multiplied by 50 percent. Emission factors from the literature were also used for PM emissions from broiler and turkey houses.

Nitrous oxide emissions in all cases were calculated based on a fraction of the nitrogen in manure being emitted as nitrous oxide, using the methodology and information presented in Section 8.2.2. Volatile organic compound emissions were estimated for anaerobic lagoons based on a fraction of the potential methane emissions being converted to VOC, as explained in Section 8.2.5. Ammonia and hydrogen sulfide emissions from anaerobic lagoons were derived from swine anaerobic lagoons, using the methodology presented in Sections 8.2.1 and 8.2.3, respectively.

8.5 Comparison of Emission Estimates to Manure Characteristics

Table 8-21 compares the annual emission estimates for the model farm to the quantities of volatile solids, nitrogen, and sulfur compounds that are excreted annually. The nitrogen and sulfur excreted annually define the theoretical upper limit of ammonia and hydrogen sulfide emissions, respectively, if 100 percent mineralization occurs. The volatile solids excreted annually define the theoretical upper limit for combined emissions of methane and volatile organic compounds, if all of the volatile solids excreted are biodegraded. Obviously, only a fraction of these excreted compounds will be emitted as ammonia, hydrogen sulfide, methane, and VOC. However, this comparison provides a method to assess the general validity of the various emissions estimates.

As shown in Table 8-21, the amount of excreted nitrogen that is emitted as the sum of ammonia-nitrogen and nitrous oxide-nitrogen ranges from about 25 percent for drylot dairies to 94 percent for turkeys (cake and litter storage model T1A). The amount of excreted sulfur that is emitted as hydrogen sulfide-sulfur ranges from 10 percent (swine pit storage model S4) to 80 percent (swine flush house model S1). For the most part, these appear to be reasonable

Table 8-21.

Comparison of Nitrogen, Sulfur, and Volatile Solids in Substances Emitted to Manure Loading

Model	Manure Loading (tons/500AU-yr)			Emissions (tons/500AU-yr)				
	N	S	VS	NH3-N	N2O-N	N Total	H2S-S	VOC-C*
B1	22	3	399	9.2	0.9	10.1	--	--
B2	22	3	399	9.2	0.9	10.1	--	--
V1	3	--	10	--	0.003	0.003	--	0.01
V2	3	--	10	--	--	--	--	--
D1A	35	4	705	21.4	1.5	22.9	3.7	0.6
D1B	35	4	705	21.4	1.5	22.9	3.7	0.6
D2A	35	4	705	18.9	1.5	20.4	0.9	0.6
D2B	35	4	705	18.9	1.5	20.4	0.9	0.6
D3A	35	4	705	7.2	1.5	8.7	--	--
D3B	35	4	705	7.2	1.5	8.7	--	--
D4A	35	4	705	15.6	1.5	17.1	3.7	0.6
D4B	35	4	705	15.6	1.5	17.1	3.7	0.6
S1	14	3	173	12.4	0.01	12.4	2.4	0.3
S2	14	3	173	12.4	0.01	12.4	0.8	0.3
S3A	14	3	173	12.4	0.01	12.4	0.8	0.3
S3B	14	3	173	9.1	0.01	9.1	--	--
S4	14	3	173	9.9	0.01	9.9	0.3	--
C1A	20	2	262	10.7	1.1	11.8	--	--
C1B	20	2	262	10.3	0.8	11.1	--	--
C2	28	4	374	10.7	0.6	11.3	--	--
C3	28	4	374	18.1	0.06	18.2	1.1	0.6
T1A	29	--	375	22.2	1.7	23.9	--	--
T1B	29	--	375	21.4	1.1	22.5	--	--

* Assumes VOC consists of equal parts butyric acid, methylamine, and phenol.

ranges. It is probable, however, that the nitrogen emissions for turkeys (T1A and T1B) are significant overestimates. Nitrogen emissions, as a percentage of excreted nitrogen, from the broiler and turkey model farms should be similar. This is based on the understanding that, typically, no more than 80 percent of manurial nitrogen will be readily mineralized. As a result, emission estimates of greater than 80 percent of excreted nitrogen are unrealistic. The loss of

80 percent of excreted sulfur as hydrogen sulfide for swine model farm S1 also appears to be unrealistically high.

8.6 References

Alexander, M. 1977. Introduction to Soil Microbiology, 2nd Ed. John Wiley and Sons, New York, New York.

Andersson, M. 1998. Reducing Ammonia Emissions by Cooling of Manure in Manure Culverts. Nutrient Cycling in Agroecosystems 51: 73-79.

Anderson, D.P., C.W. Beard, and R.P. Hanson. 1964. The Adverse Effects of Ammonia on Chickens Including Resistance to Infection with Newcastle Disease Virus. Avian Diseases 8:369-379.

Aneja, V.P., J.P. Chauhan, and J.T. Walker. 2000. Characterization of Atmospheric Ammonia Emissions From Swine Waste Storage and Treatment Lagoons. Journal of Geophysical Research 105: 11535-11545.

Anthonisen, A.C., R.C. Loehr, T.B.S. Prakasam, E.G., Srinath. 1976. Inhibition of Nitrification by Ammonia and Nitrous Acid. Journal of Water Pollution Control Federation 48: 835-852.

ASAE. 1999. 1999 ASAE Standards, Engineering Practices and Data. American Society of Agricultural Engineers (ASAE), 46th Ed. St. Paul Minnesota.

Bouwman, A.F., D.S. Lee, W.A.H. Asman, F.J. Dentener, K.W. Van der Hoek and J.G.J. Olivier. 1997. A Global High-Resolution Emission Inventory for Ammonia. Global Biogeochemical Cycles 11(4): 561-587.

Brock, T.D. and M.T. Madigan. 1988. Biology of Microorganisms, 5th Ed. Prentice Hall, Englewood Cliffs, New Jersey.

Bryant, M.P., H.G. Schlegel and J. Barnea. 1976. Microbial Energy Conversions. pp. 399-412, Erich Gottze KG, Gottingen, W. Germany.

Carlile, F.S. 1984. Ammonia in Poultry Houses: A Literature Review. World's Poultry Science Journal 40:99-113.

Caveny, D.D. and C.L. Quarles. 1978. The Effect of Atmospheric Ammonia Stress on Broiler Performance and Carcass Quality. Journal of Poultry Science 57:1124-1125.

Cure, W., R.B. McCulloch, and W. Robarge. 1999. Nitrogen Emissions in North Carolina. Air and Waste Management Association Conference, October 26-28, 1999.

Deaton, J.W., F.N. Reese, and B.D. Lott. 1984. Effect of Atmospheric Ammonia on Pullets at Point of Lay. Journal of Poultry Science 63:384-385.

Demmers, T. G. M., V. R. Phillips, L. S. Short, L. R. Burgess, R. P. Hoxey and C. M. Wathes. 2001. Validation of Ventilation Rate Measurement Methods and the Ammonia Emission from Naturally Ventilated Dairy and Beef Buildings in the United Kingdom. Journal of Agricultural Engineering Research. pp. 1-10. November.

Ensminger, M.E. and C.C., Olentine, Jr. 1978. Feeds and Nutrition, 1st Ed. The Ensminger Publishing Company, Clovis, California.

ERG. 2000. Summary of Literature Search and Review to Characterize AFO Air Emissions. Memorandum from Eastern Research Group, Inc. (ERG) to U.S. Environmental Protection Agency (USEPA). October 27, 2000.

European Environment Agency. 1999. EMEP CORINAIR Atmospheric Emission Inventory Guidebook for Agriculture.

Grelinger, M.A. 1997. Improved Emission Factors for Cattle Feedlots. Emission Inventory: Planning for the Future, Proceedings of Air and Waste Management Association, U.S. Environmental Protection Agency Conference. Volume 1, pp. 515-524. October 28-30.

Grelinger, M. A. and A. Page. 1999. Air Pollutant Emission Factors for Swine Facilities. Air and Waste Management Conference Proceedings. pp. 398-408. October 26-28.

Groot Koerkamp, P.W.G., J.H.M. Metz, G.H. Uenk, V.R. Phillips, M.R. Holden, R.W. Sneath, J.L. Short, R.P. White, J. Hartung, J. Seedorf, M. Schroder, K.H. Linkert, S. Pederson, H. Takai, J.O. Johnsen, and C.M. Wathes. 1998. Concentrations and Emissions of Ammonia in Livestock Buildings in Northern Europe. Journal of Agricultural Engineering Research 70: 79-95.

Grub, W., C. A. Rollo, J. R. Howes. 1965. Dust Problems in Poultry Environments. Transactions of the American Society of Agricultural Engineers. pp. 338-39, 352.

Harper, L. and R. Sharpe. 1998. Ammonia Emissions from Swine Waste Lagoons in the Southeastern U. S. Coastal Plains. North Carolina Department of Environment and Natural Resources Report, USDA-ARS Agreement No. 58-6612-7M-022.

Hartung, J. and V. R. Phillips. 1994. Control of Gaseous Emissions from Livestock Buildings and Manure Stores. Journal of Agricultural Engineering Research 57:173-189.

Hashimoto, A.G. 1984. Methane from Swine Manure: Effect of Temperature and Influent Substrate Composition on Kinetic Parameter (k). Agricultural Wastes 9: 299-308.

Hashimoto, A.G., V.H. Varel, and Y.R. Chen. 1981. Ultimate Methane Yield from Beef Cattle Manure: Effect of Temperature, Ration Constituents, Antibiotics, and Manure Age. Agricultural Wastes 3: 241-256.

Hill, D.T. 1982. Design of Digestion Systems for Maximum Methane Production. Transactions of the American Society of Agricultural Engineers 25 (1):226-230.

Hill, D.T. 1984. Methane Productivity of the Major Animal Types. Transactions of the American Society of Agricultural Engineers 27 (2) 530-540.

Hoeksma, P., N. Verdoes, and G. J. Monteny. 1993. Two Options for Manure Treatment to Reduce Ammonia Emission from Pig Housing.

Hutchinson, G.L., A.R. Mosier, and C.E. Adre. 1982. Ammonia and Amine Emissions from a Large Cattle Feedlot. Journal of Environmental Quality 11(2): 288-293.

Jacobson, L. et al. 1999. Odor and Gas Emissions from Animal Manure Storage Units and Buildings. American Society of Agricultural Engineers Annual International Meeting. July 18-22, 1999. Toronto, Ontario, Canada.

Kroodsma, W., R. Scholtens, J. Huis in't Veld. 1988. Ammonia Emissions from Poultry Housing Systems Volatile Emissions from Livestock Farming and Sewage Operations. Proceedings of CIGR Seminar Storing, Handing and Spreading of Manure and Municipal Waste, September 20-22, Uppsala, Sweeden. Volume 2:7.1-7.13

Martin, J. H. 2000. A Comparison of the Performance of Three Swine Waste Stabilization Systems. Prepared by Resource Conservation Management for Eastern Research Group, Inc., Lexington, Massachusetts.

Martin, J.H., Jr. and R.C. Loehr. 1977. Poultry Waste Management Alternatives: A Design and Application Manual. EPA-600/2-77-204. U.S. Environmental Protection Agency.

Misselbrook, T. H., B. F. Pain, and D. M. Headon. 1998. Estimates of Ammonia Emission from Dairy Cow Collecting Yards. Journal of Agricultural Engineering Research. 71:127-135.

Morris, G.R. 1976. Anaerobic Fermentation of Animal Wastes: A Kinetic and Empirical Design Evaluation. Unpublished M.S. Thesis, Cornell University, Ithaca, New York.

NCDENR. 1999. Status Report on Emissions and Deposition of Atmospheric Nitrogen Compounds from Animal Production in North Carolina. North Carolina Department of Environment and Natural Resources (NCDENR).

Ni, J., A. J. Heber, C. A. Diehl, T. T. Lim. 2000. Ammonia, Hydrogen Sulphide and Carbon Dioxide Release from Pig Manure in Under-floor Deep Pits. Journal of Agricultural Engineering Research. 77:53-66.

North, M.O. and D.D. Bell. 1990. Commercial Chicken Production Manual, 4th Ed. Chapman and Hall, New York, New York.

Oosthoek, J., W. Kroodsma, and P. Hoeksma. 1991. Ammonia Emission from Dairy and Pig Housing Systems. Odor and Ammonia Emissions From Livestock Farms. Elsevier Applied Science, 1991

Pedersen, S., et al. 2000. Dust in Pig Buildings. Journal of Agriculture Safety and Health. 6(4):261-274.

Secrest, Cary. 2000. Field Measurement of Air Pollutants Near Swine Confined Animal Feeding Operations using UV DOAS and FTIR. Unpublished report.

Takai, H., S. Pedersen, J.O. Johnson, J.H.M., Mertz, P.W.G. Groot Koerkamp, G.H. Uenk, V.R. Phillips, M.R. Holden, R.W. Sneath, J.L. Short, R.P. White, J. Hurtung, J. Seedorf, M. Schroder, K.H. linkert, C.M. Wathes. 1998. Concentrations and Emissions of Airborne Dust in Livestock Buildings in Northern Europe. Journal of Agricultural Engineering Resources 70: 59-70.

Tamminga, S. 1992. Gaseous Pollutants Produced by Farm Animal Enterprises. Farm Animals and the Environment (eds. C. Pludips, D. Piggens) CAB International, Wallingford, UK.

Tate, R.L. 1995. Soil Microbiology. John Wiley and Sons, New York, New York.

University of Minnesota. 1999. Generic Environmental Impact Statement on Animal Agriculture: A Summary of the Literature Related to Air Quality and Odor.

USDA. 2000. Confined Livestock Air Quality Subcommittee, J. M. Sweeten, Chair. U.S. Department of Agriculture (USDA), Agricultural Air Quality Task Force (AAQTF) Meeting, Washington, DC. Air Quality Research & Technology Transfer Programs for Concentrated Animal Feeding Operations.

USDA. 1992. Agricultural Waste Management Field Handbook, National Engineering Handbook, Part 651. U.S. Department of Agriculture (USDA), Natural Resources Conservation Service (NRCS), Washington, D.C.

USEPA. 2001. Inventory of U.S. Greenhouse Gas Emissions and Sinks: 1990-1999. EPA 238-R-00-001. April, 2001.

USEPA. 2000. Non-Water Quality Impact Estimates for Animal Feeding Operations. Final Report. U.S. Environmental Protection Agency (USEPA), Office of Water, Engineering and Analysis Division, December 15, 2000.

USEPA. 1994. Development and Selection of Ammonia Emission Factors. Prepared for U.S. Environmental Protection Agency (USEPA), Office of Research and Development by R. Battye, W. Battye, C. Overcash, and S. Fudge of EC/R Incorporated. Durham, North Carolina.

Valentine, H. 1964. A Study of the Effect of Different Ventilation Rates on Ammonia Concentrations in the Atmosphere of Broiler Houses. British Journal of Poultry Science 5:149-159.

Valli, L., S. Piccinini, and G. Bonazzi. 1991. Ammonia Emission from Two Poultry Manure Drying Systems. Odor and Ammonia Emissions from Livestock Farming. Elsevier Applied Science, 1991.

Van Der Hoek, K.W. 1998. Summary of the Work of the UNECE Ammonia Expert Panel. Atmospheric Environment 32: 315-316.

Van Horn, H.H. 1998. Factors Affecting Manure Quantity, Quality, and Use. Proceedings of the Mid-South Ruminant Nutrition Conference, Dallas-Ft Worth, TX. May 7-8, 1998. Texas Animal Nutrition Council. pp 9-20.

Witter, E. 1991. Use of CaCl2 to decrease ammonia volatilization after application of fresh and anaerobic chicken slurry to soil. Journal of Soil Science 42:369-380.

Zhu, J., L. Jacobson, D. Schmidt and R. Nicolai. 2000. Daily Variations in Odor and Gas Emissions from Animal Facilities. American Society of Agricultural Engineers. 16(2):153-158.

9.0 SUMMARY OF EMISSION CONTROL METHODS

This section summarizes the possible control methods for reducing air emissions from AFOs. The information assembled for this effort was obtained by a review of the available literature (ERG, 2000). The goal of the literature review was to identify possible control methods, emission reductions, cost information, and secondary impacts. The review focused on the control of particulate matter, ammonia, hydrogen sulfide, methane, and volatile organic compounds. The search found no techniques that were designed specifically to control nitrous oxide emissions.

Many of the articles described possible control methods but contained little or no performance data on derived from evaluation under commercial conditions. When performance data was presented, it usually was derived from short-term, pilot-scale studies. With the exception of covered anaerobic lagoons and anaerobic digesters, no information was found in the literature to assess the extent to which these possible control methods are being used. Additionally, much of the information on control methods was developed from pilot-scale or research studies. These technologies have not been evaluated as part of this study, and no determination has been made about the technical feasibility, level of commercial demonstration, control efficiency, cost, or cost reasonableness for any of these technologies. More study is needed to determine if this is a complete list of available control methods and to assess the technical and economic feasibility of applying these technologies in any of the sectors of animal agriculture.

This chapter does not specifically discuss the control of odors. Many of the publications reviewed focused on the suppression or control of odors, which was expected given that emissions of malodorous compounds have been a continuing problem for AFOs for many years. However, odor is not the result of the formation and emission of a distinct compound but rather an indicator of the presence of one or more of the compounds (ammonia, hydrogen sulfide, and VOC) that collectively contribute to odor. Where the literature linked odor control to specific substances, that information was used in this summary. While methods for reducing odor

emissions are not specifically addressed in this report, the methods identified for reducing emissions of ammonia, hydrogen sulfide, and VOC also will reduce odors.

Emissions can be controlled by preventing or inhibiting the formation of emitted substances, suppressing emissions of substances once formed, or capturing and controlling a substance that is emitted. Inhibition techniques either reduce the amount of nitrogen and sulfur available to form ammonia and hydrogen sulfide or remove the conditions that favor formation. Suppression techniques prevent the release of substances once they have been generated. Because the substances are not physically altered or destroyed, they can be emitted at a later time or at another location (e.g., covering a manure storage pond or lagoon will contain ammonia but not prevent emission during subsequent land application if manure is surface applied). Control techniques reduce emissions by capturing airborne emissions or altering the chemical composition of compounds to another form (e.g., converting ammonia to nitrate).

Tables 9-1 through 9-5 summarize the control methods found for PM, ammonia, hydrogen sulfide, methane, and volatile organic compounds, respectively. The tables categorize the control methods by inhibition, suppression, and control; indicate the parts of the farm (e.g. confinement, manure management, etc) to which the method applies; and provide available information on control efficiency.

The remainder of this chapter summarizes the information obtained from the literature review. The controls for particulate matter, gaseous emissions, and land application are presented in Sections 9.1, 9.2, and 9.3, respectively. Each section briefly describes the control methods and the emission control mechanisms and presents the information found on control efficiency, costs, and secondary environmental impacts.

9.1 Particulate Matter Emission Controls

Particulate matter is emitted from outdoor and indoor confinement facilities, as well as stockpiles of manure solids. Particulate matter emissions from outdoor confinement facilities and manure stockpiles consist primarily of dry manure particles and soil. Low moisture

Table 9-1.

Summary of Control and Suppression Techniques for Particulate Matter Emissions[a]

Description	Outdoor Confinement	Indoor Confinement	Manure Storage and Stabilization	Land Application	Carcass Handling
Suppression techniques					
- Water application	✔			✔	
- Oil application		✔ (60-80%)			
- Modification of feed handling/ delivery systems		✔ (35-70%)			
- Covering of manure stockpiles			✔		
Capture and control techniques					
- Filtration		✔ (50-60%)			
- Ionization		✔ (40-60%)			
- Wet scrubbing		✔ (≤90%)			

[a] Where available, percent reductions from literature are provided.

Table 9-2.

Summary of Inhibition, Suppression, and Control Techniques for Ammonia Emissions[a]

Description	Outdoor Confinement	Indoor Confinement	Manure Storage and Stabilization	Land Application	Carcass Handling
Inhibition techniques					
- Design and operating methods	✔	✔			
- Diet manipulation	✔	✔ (28-53%)	✔	✔	
- Manure additives			✔[b]		
Suppression techniques					
- Acidification of manure		✔	✔		
- Covers			✔ (>80%)		
- Rapid incorporation				✔	

Table 9-2.

Summary of Inhibition, Suppression, and Control Techniques for Ammonia Emissions (Continued)[a]

Description	Outdoor Confinement	Indoor Confinement	Manure Storage and Stabilization	Land Application	Carcass Handling
- Direct injection				✔ (>87%)	
Capture and control techniques					
- Biofiltration		✔ (50-80%)			
- Bioscrubbing		✔ (≤89%)			
- Biocovers			✔		
- Gas absorption		✔ (≤53%)			
- Covering of anaerobic lagoons with biogas			✔		
- Anaerobic digestion			✔		
- Chemical oxidants			✔		
- Ozonation		✔ (15-50%)[c]			
- Incineration					✔
- Composting			✔[d]		✔[d]

[a] Where available, percent reductions from literature are provided.
[b] The performance of this technique has not been consistently reproduced.
[c] Performance of control was affected by seasonal ventilation conditions.
[d] Level of control depends on carbon to nitrogen ratio in compost.

Table 9-3.

Summary of Control and Suppression Techniques for Hydrogen Sulfide Emissions[a]

Description	Outdoor Confinement	Indoor Confinement	Manure Storage and Stabilization	Land Application	Carcass Handling
Suppression techniques					
- Diet manipulation	✔	✔	✔	✔	
- Manure additives		✔	✔[b]		
- Covers			✔ (>95%)		
- Prompt removal to disposal					✔
Capture and control techniques					
- Biofiltration		✔ (80-86%)			
- Biocovers		✔			
- Gas absorption		✔			
- Aerobic treatment		✔	✔		
- Covering of anaerobic lagoons with biogas control			✔		
- Anaerobic digestion			✔		
- Ozonation		✔			
- Incineration					✔
- Composting			✔[c]		✔[c]

[a]Where available, percent reductions from literature are provided
[b]The performance of this technique has not been consistently reproduced.
[c]Assuming adequate aeration to maintain predominantly aerobic conditions.

Table 9-4.

Summary of Control and Suppression Techniques for Methane Emissions[a]

Description	Outdoor Confinement	Indoor Confinement	Manure Storage and Stabilization	Land Application	Carcass Handling
Suppression techniques					
- Manure additives		✔[b]			
- Covers			✔		
- Prompt removal to disposal		✔			✔
Capture and control techniques					
- Biocovers			✔		
- Covering of anaerobic lagoons with biogas control			✔		
- Anaerobic digestion			✔		
- Ozonation		✔			
- Incineration					✔
- Composting			✔[c]		✔[c]

[a]Where available, percent reductions from literature are provided
[b]The performance of this technique has not been consistently reproduced.
[c]Assuming adequate aeration to maintain predominantly aerobic conditions.

Table 9-5.

Summary of Control and Suppression Techniques for Volatile Organic Compound Emissions[a]

Description	Outdoor Confinement	Indoor Confinement	Manure Storage and Stabilization	Land Application	Carcass Handling
Suppression techniques					
- Manure additives		✔[b]	✔[b]		
- Covers			✔		
- Prompt removal to disposal		✔			✔
Capture and control techniques					
- Biofiltration		✔			
- Covering of anaerobic lagoons with biogas control			✔		
- Anaerobic digestion			✔		
- Vent gas capture/control		✔	✔		
- Incineration					✔
- Composting			✔[c]		✔[c]

[a]Where available, percent reductions from literature are provided.
[b]The performance of this technique has not been consistently reproduced.
[c]Assuming adequate aeration to maintain predominantly aerobic conditions.

feedstuffs, such as hay, also can be sources of PM emissions. Wind and movement of animals and vehicles generate the emissions of PM to the atmosphere.

With indoor confinement facilities, the primary sources of PM emissions are dried manure, feedstuffs, litter (bedding), and animal dander. Feathers from poultry also are a source of PM emissions. Particulate matter suspension is caused by movement of animals and by air circulation from natural or mechanical ventilation. The amount of PM generated from dried manure depends on the method of manure handling used in the indoor confinement facility. For example, manure is a significant fraction of the PM emissions from broiler and turkey production

facilities as well as high-rise type houses for laying hens because the manure is handled as a dry solid. Conversely, manure that is handled as a semisolid, slurry, or liquid, such as swine and dairy cow manure, is not a source of PM emissions.

Particulate matter emissions associated with feedstuffs primarily are associated with handling such as transfer into storage and delivery to animals. Finely ground feedstuffs for poultry and swine, which may be fed in pelletized form, are significant sources of PM.

This section discusses the following control methods for reducing PM emissions from animal confinement: water application; oil application; modifications to feed handling and delivery systems; filtration; ionization; wet scrubbing; and covering of manure stockpiles. Although descriptions of these techniques were found in the literature review, full-scale evaluations and demonstrations are lacking.

9.1.1 Water Application

Description and Applicability of Technique

To suppress PM emissions from outdoor feedlots, water sprays or sprinkler systems can be used to prevent the confinement surface (e.g., manure and soil) from becoming too dry. In practice, tanker trucks are used to dispense water over the confinement area surface. However, the suppression technique may only be practical for small operations since a large amount of water is needed. One reference (Sweeten, 2000) cited the amount of water for suppressing dust was similar to the cattle drinking water requirements during the dry season (0.1 to 0.25 inches per day). No discussion of using water sprays for indoor confinement for PM emissions suppression were found in the literature review, although increasing the humidity level indoors (e.g., using water sprays) should reduce the suspended PM concentration. Misting systems are used in indoor confinement facilities for broilers, turkeys, and swine. However, these systems are typically only used during hot weather for evaporative cooling.

Summary of Performance and Cost Data

No data are available to characterize the effectiveness of water sprays on reducing PM emissions from outdoor or indoor operations. However, increasing the moisture content of outdoor confinement soil or litter in broiler and turkey production facilities may increase other emissions because microbial activity in the manure is stimulated. No data are available to estimate cost of this suppression technique. However, the controls costs would include the delivery system (e.g., tanker truck, misting system), water availability, and labor and management costs.

9.1.2 Oil Application

Description and Applicability of Technique

Suppression of PM from confinement housing has been achieved by applying vegetable oil on interior building surfaces (using hand-held sprayers or sprinklers systems) and by applying oil to the skin of swine (using rollers or scratching posts that dispense oil on contact). However, the oil can be a safety hazard (i.e., slippery floors) for both personnel and animals. Also, the oily surfaces can increase building clean-out times between production cycles and may contribute to gaseous emissions as the residue undergoes microbial decomposition.

Summary of Performance and Cost Data

Several studies (Mankell, et al., 1995; Takai, et al., 1993; Zhang, et al., 1996) discussed reducing indoor PM concentrations using oil sprays. One study (Takai, et al., 1993) achieved from 60 to 80% reduction in suspended PM concentrations using oil sprays in a swine confinement building. No secondary impacts related to this suppression technique have been reported in the literature. No basis to estimate the cost of this suppression technique or the potential increase in cleaning cost was found. However, the control costs would include the delivery system (e.g., portable sprayer), oil, and labor and management costs.

9.1.3 Modification of Feed Handling and Delivery System

Description and Applicability of Technique

Particulate matter emissions generated by the feed handling and delivery system can be reduced by the following modifications to the system:

- Mixing vegetable oil or animal fats with the feed;
- Using totally enclosed delivery systems and covered feeders (except poultry feeders); and
- Using pelletized feed.

These modifications generally are applicable only to grain-based poultry and swine feeds that are fed directly after grinding or following pelleting.

Oils and fats commonly are added to poultry and swine rations as sources of metabolizable or digestable energy with use depending in part on the cost of other sources of energy. They also are used as a binder for pelleting. One drawback of adding fats or oils to feeds is the possibility of spoilage and the possible development of a rancid flavor reducing feed consumption.

Options to control PM from feed handling systems generally are limited to the capture of dust generated when feeds are transferred to storage bins. This can be done by capturing PM emitted from feed bin vents when bins are filled with feed. For swine operations, automatically-closing feeder covers may reduce PM emissions to some degree by reducing the air movement over the feed.

Pelleting of animal feeds is also a control technique for PM emissions. However, this technique is not applicable to some feeds, such as starter rations for broilers and turkeys, which cannot be pelletized.

Summary of Performance and Cost Data

Several studies (Chiba, et al., 1987; Heber and Martin, 1988; Takai, et al., 1996) reported that PM reductions in air concentrations ranging from 35 to 70% have been achieved by adding fats or oils (one to 4%) to the feed of indoor confinement housing (primarily swine and poultry). However, pelleting may reduce the digestability of swine and poultry rations.

No quantitative cost data for modifying the feed handling and delivery system were found in the literature. However, using fat or oils for PM suppression could result in increased feed costs.

9.1.4 Filtration

Description and Applicability of Technique

Filters remove PM by impaction of entrained particulates on the filter media as air is passed through the filter. Filtration of indoor air can reduce PM emissions from confinement housing. Filters are not a feasible control option for outdoor confinement since the contaminated air cannot practically be captured and conveyed to the control device. Filtration can be applied to building exhaust ventilation air, where mechanical ventilation is used, to reduce dust emissions from totally or partially enclosed confinement housing. Filters also can be integrated into an air recirculation system that does not vent to the atmosphere.

Although not encountered in the literature, commercially available units using synthetic filter media could be used to reduce PM emissions from indoor confinement housing. Also, systems have been fabricated using natural material (e.g., straw and other crop residues) as the filter media. In these systems, building exhaust is routed through a structure containing the crop residue.

Over time, the filter media will become clogged with PM and the media must either be cleaned or replaced. Filters made from synthetic materials typically are reused after cleaning whereas natural filter media are replaced with new material.

Summary of Performance and Cost Data

Data on the performance of filters in reducing PM concentrations was reported in only one study (Carpenter and Fryer, 1990). In that study, a synthetic filter achieved reductions in indoor PM concentrations from swine confinement ranging from 50 to 60%. The filter was a two-stage system that consisted of a coarse pre-filter and a fine filter, in series.

The secondary impacts associated with using filters would be the emissions from the generation of the additional electricity needed for fans used to convey the contaminated air through filters. Also, the filters themselves can generate waste streams, depending on type of cleaning mechanism used (i.e., solid waste if the spent filter media is disposed of; liquid waste if the media is washed).

No cost data were identified in the literature review for filtration of indoor confinement housing air. However, the capital costs would include duct work for routing building exhaust air, the filter housing, and filter media. Annual costs would include maintenance, labor, and management costs and any additional costs of electricity used for powering duct work fans, if needed.

9.1.5 Ionization

Description and Applicability of Technique

Ionization is a potential method for reducing PM emissions from indoor confinement housing although evaluation of its applicability to AFO's has been limited. In ionization, gas molecules (e.g., oxygen) acquire a charge from high-energy electrons created by an electrically-generated corona field. The ionized gases adhere to particulates which then move to the nearest

grounded surface (e.g., building surface, grounded collection plate). This is the collection mechanism used by electrostatic precipitators (ESP's) in other industries, such as utilities.

For AFO applications, commercially-available room ionizers have been used to charge the indoor air molecules. Building surfaces have been used to collect PM (separate collection plates were not used).

Summary of Performance and Cost Data

Although ionization (i.e., ESP's) have been demonstrated to achieve PM removal efficiencies of 99% or greater in other industries, ionization has been shown to reduce PM emissions by only 40 to 60% in agricultural applications, based on the results of three separate studies (Bundy, 1984; Bundy, 1991; and Moller). No explanation for the lower PM removal efficiencies of ionization used for agricultural applications was found in the studies. However, high moisture content of the air stream may have been a factor.

The secondary impacts associated with using ionization would include the emissions from the generation of the electricity needed to convey the contaminated air and to generate the corona field. Also, ionization also produce ozone and nitrous oxide. As with filters, the material collected using ionization requires disposal.

No data were found for estimating the costs of ionization for the reduction of PM emissions from indoor confinement facilities.

9.1.6 Wet Scrubbing

Description and Applicability of Technique

Wet scrubbing is a potential control technique for reducing PM emissions from confinement housing ventilation exhaust. A wet scrubber is typically an enclosed tower (with or without packing material) or wetted pad where a particulate-laden gas stream flows counter-

current to the flow of water. Particulates are removed by direct impaction and interception with or diffusion into water droplets.

Summary of Performance and Cost Data

The evaluation of wet scrubbers in the AFO industry has been limited. One study (Pearson, 1989) showed a PM reduction of up to 90% using wet scrubbing. The secondary impacts associated with using a wet scrubber would include the emissions from the generation of the electricity needed to convey the contaminated air to the scrubber and the electricity needed to run the scrubber pumps. Wet scrubbers also generate a liquid waste stream (i.e., scrubber effluent).

No quantitative cost data for wet scrubbers applied to indoor confinement were encountered in the literature review. However, the capital costs would include the cost of the scrubber (or wetted pad), pumps for circulating scrubbing media, electric fans for moving confinement housing air, and any duct work needed to convey building air to the scrubber. Annual operating costs would include the electricity for pumps and fans, labor and management costs.

9.1.7 Covering of Manure Stockpiles

Description and Applicability of Technique

The potential for direct PM emissions from manure storage facilities obviously is limited to those used to handle manure as a solid with wind being the mechanism responsible for PM suspension and transport. Thus, covering stacked manure with sheet plastic or tarpaulins or use of windbreaks will reduce PM emissions from these storage facilities.

Summary of Performance and Cost Data

No data were found in the literature for characterizing the performance or estimating the costs of covering solid manure stockpiles. However, covering stored manure could potentially create anaerobic conditions that could initiate or increase ammonia, hydrogen sulfide, methane, and VOC emissions.

9.2 Gaseous Emission Controls

Gaseous compounds are generated by microbial decomposition of animal manure in confinement and manure storage and stabilization facilities. Gaseous compounds are also generated by microbial decomposition of animal carcasses. The presence of aerobic versus anaerobic conditions determines the nature of gaseous compounds formed.

Under aerobic conditions, the principal gaseous emissions will be carbon dioxide and ammonia. The carbon in organic compounds is oxidized to carbon dioxide, and nitrogen is mineralized to ammonia. Also, any reduced forms of sulfur including hydrogen sulfide will be oxidized to non-volatile sulfate. Aerobic conditions are typically associated with storage and stabilization of manure solids. The potential for aerobic conditions is limited to low moisture content manures such as broiler and turkey manures and other manures handled as solid.

Under anaerobic conditions, the carbon in organic carbon compounds will be reduced primarily to methane and various VOC with some formation of carbon dioxide also occurring. Nitrogen and sulfur will be reduced to ammonia and hydrogen sulfide, respectively. Because oxygen only is sparingly soluble in water resulting in a very slow rate of natural diffusion, conditions exist when manure is handled as a liquid or slurry unless external aeration is provided.

The gaseous emission control techniques identified in the literature review include techniques for inhibiting and suppressing gaseous emissions and for altering the chemical composition of gaseous compounds (e.g., converting reduced compounds to oxidized compounds). With the exception of covering of anaerobic lagoons (with and without biogas

collection), anaerobic digestion, and composting, full-scale evaluation and demonstration under commercial conditions of control methods described in this section generally have been lacking.

9.2.1 Confinement Facility Design and Operating Methods

Description and Applicability of Technique

Confinement facility design and operating practices can inhibit the generation of reduced gaseous compounds or suppress emissions once they have been generated. However, suppression techniques may only transfer the point of emissions to another AFO process (e.g., to manure storage or a land application site). Also, because of their nature, these design and operating practices may be applicable only to new facilities.

On outdoor feedlots, moist conditions lead to anaerobic decomposition of manure. Suppression of emissions of reduced gaseous compounds can be achieved by faster drying of manure and frequent removal of manure from the confinement area. Sloping of the feedlot surface (4 to 6%) towards the south to southeast direction will ensure that the feedlot will receive the most insolation and that the accumulated manure dries more quickly. Ammonia and other gaseous emissions can also be reduced by removing solid manure frequently (every 7 days or less). However, manual removal will tend to transfer ammonia and other gaseous emissions to manure storage and stabilization processes.

With slurry systems, frequent flushing or scraping to remove manure from partially or totally enclosed facilities also reduces the potential for gaseous compound emissions from the confinement facility. A smooth floor surface will increase the effectiveness of frequent removal by both flushing and scraping. Ideas such as flow-through partitions and under floor ventilation have been proposed to enhance manure drying in partially or totally enclosed confinement facilities but both effectiveness and practicality seem questionable.

In facilities were manure is collected in shallow or deep pits, which typically are located under slatted floors, filling the pit with enough water so that all of the accumulating manure

solids are submerged may reduce ammonia, hydrogen sulfide, and VOC emissions to some degree. Both ammonia and hydrogen sulfide are highly soluble in water as are some VOC. If these pits are not ventilated and have little natural air movement, there will be a decrease in the concentration gradient across the interface between the liquid and gas phases with the consequence of decreased rates of mass transfer. Because methane is essentially insoluble in water, methane emissions will not be decreased.

Summary of Performance and Cost Data

Although these general design guidelines were addressed in the literature, no quantitative data were found in the review to characterize the reduction in gaseous pollutants achieved, secondary impacts, or the cost of implementing these guidelines.

9.2.2 Acidification of Manure in Confinement Housing

Description and Applicability of Technique

As discussed in section 2.2.1, ammonia volatilization is inhibited under acidic conditions. At a pH of approximately 4.5 or lower, virtually all of the ammonia present exists as nonvolatile ammonium ion (NH_4^+). Consequently, ammonia emissions can be suppressed by acidification of solid and liquid manure. However, decreasing manure pH will increase the potential for volatilization of hydrogen sulfide.

Acidification is used extensively to reduce ammonia emissions during the initial stage of broiler and turkey grow-out cycles to decrease the incidence of ammonia-induced respiratory problems and blindness in young birds. For many years, phosphoric acid was used as the acidifying agent but concern about high phosphorus concentrations in land-applied manures has resulted in a shift to other materials such as sodium bisulfate and aluminum sulfate. Usually ammonia volatilization is suppressed only for about two weeks because of the buffering agents, such as calcium and magnesium carbonates, being continually added in freshly excreted manure.

Repeat applications of an acidifying agent would prolong the period of suppression but may only delay emissions to storage or land application processes.

This technique is also applicable to manure collection in confinement housing for swine and dairy operations that use flushing systems. Using low-pH liquid with flushing systems can decrease the rate of ammonia volatilization.

In theory, ammonia emissions from manures handled as liquids or slurries or manure accumulations on open lots could also be reduced using acidification. No use of this method was not found in the literature review.

Summary of Performance and Cost Data

For acidification of manure, no data were found during the literature review to estimate the decrease in emissions of reduced gaseous compounds achieved with this technique. With regard to flushing systems, one study reported that flushing swine confinement areas with low pH liquid (one to two times daily) achieved approximately 70% reduction in ammonia emissions (Heber et. al, 1999).

Because acidification is a suppression technique, the potential exists for ammonia to be volatilized from downstream processes (e.g., storage or land application) if the pH increases above 4.5. Also, the chemistry of hydrogen sulfide suggests that acidifying manures that have an anaerobic microbial environment will increase hydrogen sulfide emissions.

No quantitative cost data were found for acidification of manure. However, the use of acids may not be economical since sophisticated application systems are typically required due to their dangerous and corrosive nature. Although using base-precipitating salts is less expensive and hazardous than acidifying agents, the reduction in manure slurry pH is more transient, and more frequent applications would be required to maintain a low pH.

No information for quantifying the cost of flushing with low-pH liquid was found in the literature review. Because of the higher buffer capacity of livestock and poultry manures, it appears reasonable to conclude that the cost of acidification would be significant.

9.2.3 Biofiltration of Confinement Housing Exhaust

Description and Applicability of Technique

Biofilters use microbial action in an aerobic environment to oxidize the reduced compounds generated by indoor confinement into carbon dioxide, water, salts, and biomass. In biofiltration, building air from the ventilation system exhaust is passed through a filter bed with an established, diverse population of aerobic microorganisms. As the air stream flows through the filter media, oxidation of the gaseous compounds occurs.

A typical bio-filter consists of a piping system for distributing the contaminated air throughout the filter bed. The filter media is usually organic (soil, compost, wood chips, etc.) with sufficient bulk to allow the air stream to pass through and to prevent anaerobic conditions. Additionally, bio-filters must have a drainage system (either active or passive) to remove excess condensate and precipitation. Although some moisture (50 to 60%) in the filter bed is needed to maintain microbial activity, excess moisture can lead to anaerobic conditions and failure of the bio-filter. A filtration system upstream of the bio-filter may be needed in some cases to remove PM since accumulated dust will clog the filter over time. Also, the filter bed must be rodent and weed free to avoid channeling of gases through the filter media and a loss of performance.

Because biofilters rely on microbial activity, performance is affected by ambient conditions (lower temperatures slow microbial activity) and variations in the pollutant concentrations in the contaminated air stream. The activity rate of microorganisms in the filter increases with increasing temperature. Consequently, the performance of biofilters will vary seasonally unless provisions are made to preheat the incoming air stream during cold weather. Excessive variation in pollutant concentrations also can cause performance variability.

Summary of Performance Data

Although boilfilters have been successfully used in other industries, there are few reported cases where a biofilter has been shown to be economically viable when applied to AFOs (Zahn et al., 2001). However, various pilot studies (University of Minnesota, 1999), primarily with swine operations, have shown that biofilters can reduce ammonia emissions by 50 to 80% and hydrogen sulfide emissions by 80 to 86%. (No explanation for the wide variation in performance was given by the literature, however several of the biofilters were pilot-scale units.)

Although not specifically encountered in the literature review, biofilters can also be a source of nitrous oxide emissions due to denitrification following the oxidation of ammonia to nitrate and nitrate nitrogen. Periodically, the filter media must be replaced due to decomposition and compaction that occurs over time. This material is a potential source of solid waste. However, most organic media could be disposed of by land application.

Summary of Cost Data

One article (Boyette, 1998) summarizing general biofilter performance reported that the operating and maintenance expenses for a biofilter range from $2 to $14 per cubic feet of air treated. Another article (Leson and Winer, 1991) summarized the general design and performance data for biofilters used in other industries. This article presented ranges of capital cost estimates for open single-bed filters of $55 to $90 per square foot ($ft^2$) of filter area and $90 to $500/ft^2$ for enclosed systems.

9.2.4 Gas Absorption of Confinement Housing Exhaust

The operation of a gas absorber for removing gases, primarily ammonia and hydrogen sulfide, is very similar to that of a wet scrubber used to remove PM. However, the mechanism for removing gaseous compounds differs.

In a gas absorber, building air is collected and passed through an enclosed (typically packed) tower with the absorption media (e.g., caustic solution) flowing counter-current to the incoming air stream. Gases in the air stream diffuse into and are absorbed by the media.

Although water is used as the scrubbing media in many applications, the absorption of the gases can be enhanced using chemical reactions between the target gases and the absorbing media, such as using caustic solution to remove acid gases.

Summary of Performance Data

Although no performance data was located during the literature review for absorbers applied to gaseous emissions from animal housing, one study (University of Minnesota, 1999) reported the ammonia removal achieved by a washing wall at a swine facility. A washing wall is a water curtain intended to remove PM as the building air passes through it, using the same removal mechanism (i.e., impaction) as a wet scrubber. Because of ammonia's solubility in water, the washing wall was shown to reduce ammonia emissions up to 53%.

The secondary impacts associated with using a gas absorber would include the emissions from the generation of the electricity needed to convey the contaminated air to the scrubber and the electricity needed to run the scrubber pumps. The effluent from a gas absorber is also a potential waste stream. If a caustic solution is used to remove acidic compounds such as hydrogen sulfide or an acidic solution is used to remove basic compounds such as ammonia from the air stream, the salts formed, such as sodium sulfate and ammonium phosphate, are removed from the scrubber as precipitates. If water is used as the scrubbing media, ammonia and hydrogen sulfide go into solution. Because only ionization occurs the ammonia and hydrogen sulfide removed from the air stream can revolatilize from the scrubber effluent (e.g., if saturated effluent is exposed to the atmosphere).

Summary of Cost Data

No cost data for gas absorbers were found in the literature. However, one study (NCSU, 1998) noted that the installation cost of a washing wall system was approximately $6 per unit of pig production capacity.

9.2.5 Bioscrubbing of Confinement Housing Exhaust

Description and Applicability of Technique

The concept behind a bioscrubber is similar to that of biofiltration with the exception that the microorganisms are housed in an enclosed packed tower with water circulated counter-current to the incoming building air, instead of in a filter bed. As contaminated air is passed through the scrubber, water-soluble compounds (ammonia, hydrogen sulfide) are absorbed by the water and oxidized microbially. Some scrubber designs contain a vessel that is used as a biological reactor. Effluent from the scrubber is routed to the vessel where additional retention time is provided for microbial oxidation. No information was found in the literature review regarding the ultimate disposal of the effluent from bioscrubbers. However, it is likely that this stream could be land applied. Periodically, the filter media (especially organic media) must be replaced due to decomposition and compaction that occurs over time.

The rate of microbial oxidation in a bioscrubber is affected by temperature and variations in pollutant concentrations. However, bioscrubbers are unaffected by PM in the incoming gas stream. Periodically, the filter media (especially organic media) must be replaced due to decomposition and compaction that occurs over time.

Summary of Performance Data

A study of three bioscrubbers at swine operations showed that reductions of ammonia emissions up to 89% could be achieved (Lais, et al., 1997). The secondary impacts from using biofilters include those associated with generation of the electricity needed to power fans and pumps. Although not specifically identified in the literature review, biofilters can be a source of nitrous oxide emissions if denitrification of the nitrified ammonia captured occurs. Bioscrubbers also are a source of solid waste (spent filter media) and wastewater (effluent from the scrubber).

The capital cost estimates for the three bioscrubbers at swine operations ranged from $9 to $17 per pig finished (Lais, et al., 1997). No estimates of bioscrubber operating costs were found in the literature, but they would include the cost of electricity for pumps, maintenance, labor, and management.

9.2.6 Ozonation of Confinement Housing Air

Description and Applicability of Technique

Ozone (O_3) is a strong oxidant that reacts with most organic materials, including organic compounds and microorganisms. Although ozone has been used in treating drinking water, limited work has been conducted in evaluating the use of ozone to oxidize reduced gaseous compounds (ammonia and hydrogen sulfide) from AFOs. Because the half-life of ozone is very short (10 to 30 minutes), it cannot be stored and must therefore be generated on-site. Typically, ozone is created by passing air through an electric field generated by a corona discharge cell.

Summary of Performance Data

One study (Priem, 1977) found that releasing ozone into the swine confinement building reduced ammonia levels in the air by 15 and 50% during the summer and winter ventilation

conditions. The lower reduction was achieved during the summer months, which reflects the increased air circulation rate through the building for cooling

The secondary impacts would include the emissions from generation of the electricity needed to power fans for moving building air and for generating the corona discharge. Additionally, ozone usage has the potential for generation of nitrous oxide and sulfur oxides as byproducts.

Summary of Cost Data

One study (NCSU, 1998) estimated that ozonation of indoor air cost approximately $6 to $11 per unit of pig production capacity (the study did not specify if the cost estimate was for capital or annual costs).

9.2.7 Chemical Oxidation of Liquid Manure Storage

Description and Applicability of Technique

Oxidation of liquid manures by aerating storage basins or lagoons can reduce emissions of ammonia, hydrogen sulfide, methane, and VOC. In aerobic stabilization, organic matter (containing carbon, hydrogen, oxygen, nitrogen, and sulfur) is microbially oxidized to carbon dioxide, water, and nitrate and sulfate ions. However, high-rate aeration, as utilized in the treatment of municipal and industrial wastewaters is energy intensive with high utility costs. Consequently, aeration of liquid manures is not typically practiced. Control of gaseous emissions is achieved however using chemical oxidants and biological treatment.

Chemical oxidants can be applied in liquid form to stored manure to oxidize ammonia, hydrogen sulfide, methane and VOC. Agents such as potassium permanganate and hydrogen peroxide can be applied to the manure surface to reduce emissions. However, a large amount of these types of additives is typically required due to the high of organic matter content of animal manures. The emission reduction achieved by these additives also appears to be short-term,

requiring frequent applications to consistently reduce gaseous emissions. Ozone has been used to reduce gaseous emissions from manure slurries by bubbling or diffusing it through the slurry. However, ozone must be produced on-site which requires costly generation and application systems (McCrory and Hobbs, 2001).

Summary of Performance and Cost Data

No characterization of chemical oxidant performance or identification of secondary impacts were found in the literature review.

Based on the results of a laboratory study (Ritter, et al., 1975) estimated costs of chemical oxidants for reducing hydrogen sulfide emissions from liquid dairy manure ranged from $0.06 to $12 per ten cubic meters of manure. These cost estimates were for a single application with no indication of the required frequency of repeat applications.

9.2.8 Manure additives

Description and Applicability of Technique

Manure additives include commercially available products that are intended to reduce ammonia volatilization from manure. The additives are typically mixed with water and poured evenly into the manure slurry. Also included are digestive additives (e.g., select microorganisms, enzymes) are intended to enhance the biodegradation of manure. Additives for absorbing ammonia and/or ammonium have also been used (McCrory and Hobbs, 2001).

Summary of Performance and Cost Data

No quantitative characterizations of the performance of manure additives or identification of possible secondary impacts were found in the literature reviewed. However, if absorbents are used, ammonia may be released during land application.

One study (Johnson, 1997) evaluated the effectiveness of eight manure additives from various suppliers. For all the additives tested, the cost was less than $0.65 per pig. However, the cost estimate did not include the labor required to apply the additives.

9.2.9 Covering of Liquid Manure Storage Tanks and Ponds

Description and Applicability of Technique

Liquid manure from swine and dairy operations is stored under anaerobic conditions in tanks or ponds or in anaerobic lagoons. Storage ponds and lagoons are large earthen impoundments that are operated under ambient conditions (no external heating). Anaerobic lagoons can be either single-cell or two-cell systems. Either a single basin (i.e., cell) is used for stabilization and storage, or the first cell is used exclusively for stabilization, and the second cell is used as an effluent storage pond with two cell systems.

Liquid manure storage tanks and ponds and lagoons are sources of ammonia, hydrogen sulfide, methane, and VOC emissions. The population of methanogenic bacteria present determines the relative amounts of methane and VOC emitted. Under-sized lagoons will emit greater quantities of VOC, but even properly sized lagoons will emit significant quantities of VOC following extended periods of cold weather as the population of methanogenic bacteria becomes reestablished.

Where feasible, covering liquid manure storage tanks and ponds and anaerobic lagoons can suppress of gaseous emissions of ammonia, hydrogen sulfide, and VOC by reducing the air circulation above the manure surface, thus providing a barrier to diffusion from solution. However, covers that are not sealed will not suppress methane emissions because the primary constituents of biogas, methane and carbon dioxide, are essentially insoluble in water. Thus, escape of methane to the atmosphere will occur via some path of least resistance as biogas accumulates under an unsealed cover. Sealed covers for anaerobic lagoons are discussed in the next section. Although there is a wide range of covers, they can generally be categorized into

two types: those that are self-supporting, and those that are supported by the manure surface (i.e., floating covers).

Generally, self-supporting covers are made from materials such as wood, plastic, and concrete. These covers typically are fabricated on-site. Additionally, certain covers depending on design, may require a drainage system for removing accumulated precipitation to prevent damage. Permanent covers are largely unaffected by ambient conditions, although some problems have been encountered with inflatable covers (a plastic membrane supported by captured biogas) under high wind conditions.

Floating covers can be permanent (e.g., polymer sheeting, polystyrene blocks) or temporary (e.g., surface crust, straw). Permanent floating covers are usually less expensive than self-supporting covers and provide greater emission reductions than temporary floating covers. Because they are typically attached to the tank or lagoon perimeter, permanent floating covers are less likely to be affected by wind. However, because they are attached, permanent floating covers may not be a applicable to cases where the level of the manure surface fluctuates appreciably. Similar to self-supporting covers, permanent floating covers made from continuous materials (e.g., plastic sheeting) may require a drainage system for removing accumulated precipitation.

To form temporary floating covers, the covering materials (e.g., chopped straw) are applied directly to the manure surface, although in some cases, a crust will form naturally on the manure surface. Rather than provide an impermeable barrier, these covers reduce emissions by slowing the rate of diffusion and volatilization gaseous compounds. Although they are the least expensive type of covering, they also achieve the lowest emission reduction relative to permanent floating and self-supporting covers. Channeling of gases can occur if holes or cracks develop in the cover. Also, natural covers can be disturbed by weather conditions (e.g., high winds), thereby reducing the effectiveness of the cover. Additionally, some temporary covering materials can become saturated and can sink into the stored manure, potentially clogging the pumping system.

Summary of Performance Data

Permanent covers (made from plastic or concrete) were shown to suppress ammonia emissions by 80% (Sommer, et al., 1993) at a swine facility. Inflatable covers have been shown to suppress ammonia, and hydrogen sulfide emissions by greater than 95% (Mannebeck, 1985; Zhang and Gaakeer, 1996) when applied to manure storage at swine facilities. Floating covers made of polystyrene or polyvinyl chloride/rubber have achieved suppression of gaseous emissions from swine manure by 90% or more (Clanton, et al., 1999). No performance data were found in the literature for temporary covers made from natural materials.

No secondary impacts are associated with the use of covers unless electricity is used to power drainage system pumps. However, the suppressed emissions will be released from the impoundment when the cover is removed and when the stored manure is land applied. Additionally, covers deteriorate over time due to temperature fluctuations and sunlight. and must be periodically replaced.

Summary of Cost Data

The cost of covers is dependent on the material of construction and the surface area to be covered. Floating covers made from synthetic materials range in capital cost from $20 to 40 per 100 square foot, depending on the type of material (Mannebeck, 1985). One study estimated that the capital cost ($6,000) of an inflatable cover installed on an anaerobic stabilization lagoon sized for 200 sows at a farrow-to-finish facility (Zhang and Gaakeer, 1996). This same study stated that a large concrete cover for the same size lagoon (i.e., 200 sows) could cost up to $50,000 (no design specifics were cited for the concrete cover).

9.2.10 Covering of Anaerobic Lagoons with Biogas Collection and Combustion

Description and Applicability of Technique

Although unsealed covers can suppress emissions of ammonia, hydrogen sulfide, and VOC emissions from manure storage tanks, ponds, and anaerobic lagoons, these gases can be emitted when the cover is removed or during land application of the stabilized manure. However, sealed covers will not only suppress emissions of ammonia, hydrogen sulfide and VOC, but will also capture the methane produced for disposal by flaring or use as a fuel. Given the relatively low rate of methane production from manure storage tanks and ponds, use of sealed covers with biogas collection only can be economically justified with anaerobic lagoons, which are designed to reduce volatile solids to methane for waste stabilization. Although covered lagoons are not used extensively in the management of animal manures, there are a small number of full-scale covered anaerobic lagoons for swine and dairy manures.

Summary of Performance Data

Although the performance data for covered anaerobic lagoons with biogas capture and utilization were not found in the literature review, reductions of ammonia, hydrogen sulfide, VOC, and methane emissions from the covered lagoon should approach 100 percent. However, subsequent emissions of ammonia, hydrogen sulfide, and VOC from effluent storage ponds with two cell systems probably will equal those from uncovered lagoons.

Because the collected biogas is sent to a combustion device (i.e., oxidized), the combustion device would be an emission source of carbon dioxide, nitrogen oxides, sulfur dioxide, and products of incomplete combustion. If, however, the captured biogas is used as a boiler fuel or for generating electricity, these emissions would be in place of those resulting from the combustion of fossil fuels replaced.

Summary of Cost Data

One article (Roos, et al., 1999) summarized cost estimates from eight vendors of lagoon covers designed for biogas collection. The installed cost (including cover components, labor, and shipping) ranged from $0.37 to $5.81 per cubic feet of lagoon surface area. The range of costs was attributed the differences in cover materials, warranties, and installations. The cost estimates did not include the cost of the gas collection system (e.g., duct work, fans) or the combustion device.

Another article (USEPA, 2000) summarized the installation costs for eleven covered lagoons with biogas collection and combustion. Detailed cost breakdowns were not provided in the article, however, the cost estimates did include the costs of cover components and combustion devices (e.g., flare, boiler). The surface areas of the lagoons covered were not provided in the article, however, an estimate of the costs can be obtained by dividing the installed cost by the animal population served by the lagoon. Using this approach, the installed costs for a farrow-to-finish swine facility ranged from $133 to $158 per pig. The installed cost for swine nursery operations ranged from $5 to $73 per pig. For dairy operations, the installed costs ranged from $34 to $750 per cow.

9.2.11 Anaerobic Digestion

Description and Applicability of Technique

A small number of full-scale anaerobic digesters are in operation at commercial dairy and swine farms. Anaerobic digesters use the same microbial processes for stabilizing animal (swine and dairy) manure as anaerobic lagoons. However, an anaerobic digester is a closed reactor that is heated and possibly mixed to optimize the production of methane from the anaerobic decomposition process.

The main components of an anaerobic digester are the digester, effluent storage, and biogas collection and utilization equipment. Anaerobic digesters for animal manures may be

either completely mixed or plug flow reactors with continuous or semi-continuous flow. The biogas produced contains about 60 to 70% methane, about 30 to 40% carbon dioxide, and trace amounts of hydrogen sulfide, VOC, and moisture. The biogas produced is used either as a boiler fuel for space or water heating or used to fuel engine-generator sets to produce electricity. A fraction of the biogas energy is sued for digester heating.

The benefits of anaerobic digestion are reduced emissions of methane, VOC, hydrogen sulfide, and ammonia. However, ammonia and hydrogen sulfide emissions may only be delayed depending on how the effluent is managed. The capital and annual operating costs of anaerobic digesters can be high but are at least partially offset by the value of the energy recovered. Also, digested fiber from dairy manure can be utilized as bedding material or sold.

Summary of Performance Data

No information was found in the literature review regarding the quantitative emissions reductions achieved by anaerobic digesters. However, because the digester is completely enclosed and the collected biogas is combusted, the percent destruction efficiency for gaseous pollutants would be similar to the performance of VOC incinerators (98%).

However, because the biogas is sent to a combustion device (either for energy recovery of control of emissions), the combustion device would be an emission source of carbon dioxide, nitrogen oxides, and sulfur dioxide and products of incomplete combustion. Again, there is an emissions off-set by replacement of fossil fuel combustion.

Summary of Cost Data

The costs of installing and operating an anaerobic digester vary depending on the system design, location, and contractors. One report (USEPA, 2000) summarized the installation costs of the various anaerobic digester systems operating in the United States. For complete mix digesters, the installed costs ranged from $18 to $325 per unit of confinement capacity (for swine facilities) and $750 to $1,852 (for dairy operations). The high-end cost estimate for the dairy

facilities included other costs associated with the operation's manure management system (e.g., storage tanks, scraper system). For plug-flow systems at dairy operations, the installed costs $200 to $1100 (the high-end cost estimate included other costs associated with manure management systems). The installed costs for plug-flow digesters at a swine facility and a poultry facility were $133 and $3, respectively.

The information found in the literature regarding operating costs of anaerobic digesters was limited. One report (USEPA, 2000) presented long-term annual operating costs (electricity, maintenance) of approximately $2000 for a digester installed at an 8,600-head swine finishing operation. The report did not specify if this operating cost estimate included the benefits of biogas energy recovery, however, the report did summarize the estimated benefits (electricity, hot water, digested diary fiber) associated with digester operations.

For dairy operations, the annual cost benefits (electricity and hot water offsets) ranged from $24 to $34 per cow. The value of the digested dairy solids ranged from $22 to $30 per cow. For swine operations, the annual cost benefits ranged from $12 to $27 per pig.

9.2.12 Biocovers for Liquid Manure Storage and Anaerobic Lagoons

Description and Applicability of Technique

In general, a biocover is a permeable cover made from natural (e.g., chopped straw) or synthetic materials that floats on the surface on a storage of stabilization basin. The biocover provides a boundary layer between the surface of the manure and the atmosphere and a substrate for the growth of aerobic bacteria. As the reduced compounds (e.g., ammonia, hydrogen sulfide) diffuse through the cover, they are microbially oxidized.

Summary of Performance Data

No quantitative performance data were found for biocovers applied to manure storage or stabilization processes. No secondary impacts associated with biocovers were identified during the literature review.

Summary of Cost Data

One study (Zahn, et al., 2001) at a single facility estimated the capital and labor costs for a biocover (interlocked, perforated panels constructed of polymeric and geotextile materials) to be \$2.37 per square meter (m^2) of surface area (\$1.14 per finisher pig). This study also cited a capital cost of \$1.62/m^2 for a biocover made of a single layer of geotextile material. A life expectancy of three-years was cited in the study as a conservative estimate.

9.2.13 Composting of Manure Solids

Description and Applicability of Technique

Composting is a predominately aerobic biological waste stabilization process characterized by a significant elevation in temperature due to microbial heat production. When properly operated, organic compounds are degraded with the oxidation of organic carbon to carbon dioxide to provide energy for cell maintenance and growth. In addition, any reduced sulfur compounds will be oxidized to sulfates. Some methane and VOC may be generated if localized anaerobic conditions occur but should be subsequently oxidized. Compost piles either are aerated continuously using air forced upward through the pile or tilled or turned periodically (typically daily) to ensure predominantly aerobic conditions. Bulking agents such as straw can be used to aid in maintaining aerobic conditions.

The magnitude of ammonia emissions during manure composting depends on the ratio of carbon to nitrogen. Without the addition of a supplemental source of carbon, ammonia emissions during manure composting will be high. Due to the elevated temperature, which may

reach 50 to 60 ^{o}C (122 to 140 ^{o}F), nitrification does not occur. However, studies confirm that the use of a sufficiently high initial carbon-to-nitrogen ratio in the composted material (e.g., achieved by adding high carbon-low nitrogen bulking agents such as straw) can minimize emissions of ammonia as well as hydrogen sulfide, methane, and VOC.

Manure can be composted in open piles or in open or enclosed structures. An impermeable surface is desirable to avoid ground water contamination. With open piles, excess moisture from precipitation can lead to the development of anaerobic conditions and generate contaminated run-off requiring collection, storage, and disposal to avoid impairment of adjacent surface waters.

Summary of Performance and Cost Data

No performance or cost data for composting were for composting operations were identified during the literature review. However, capital costs would include construction of composting bins and any equipment needed to till or turn the compost. Operating costs would include maintenance, labor, and management costs.

If the conditions in the compost become predominately anaerobic, emissions of hydrogen sulfide, methane, and VOC will occur. There will be secondary impacts associated with the use of energy for aeration and mixing.

9.2.14 Diet Manipulation

Description and Applicability of Technique

Recent studies, primarily involving swine and poultry, have demonstrated the potential for reducing gaseous emissions (e.g., ammonia) from manure by diet manipulation. The manipulation methods focus on improving nutrient. However, additional research is needed to fully evaluate the effectiveness of diet manipulation techniques since the digestion process is highly complex and the analytical results have not been consistent.

Improving the nutrient utilization by animals (and consequently the reduction of nitrogen and sulfur excreted) has been shown to reduce emissions. Excess protein that is not utilized by the animal will be excreted and contributes to ammonia emissions from manure. Several studies have shown that reducing dietary crude protein can reduce emissions of ammonia. Since proteins contain nitrogen, reducing the amount of protein that passes through the animal results in lower potential ammonia emissions. Zeolites and charcoal have been added to swine feeds in an attempt to bind ammonia, and thereby reduce emissions. The enzyme phytase has been added to poultry and swine feeds to decrease the amount of excreted phosphorous. Phytase appears also increase protein utilization.

Other additives (calcium salts, calcium benzoate) have been tried to reduce the pH (i.e., reduce the volatilization potential of ammonia) of excreted urine and manure. Research has also been conducted to evaluate the effectiveness of feeding specific substrates (e.g., polysaccharide, tea polyphenols) or microbial cultures to animals to alter the microflora contained in their digestive tracts.

Summary of Performance Data

One report (James et al., 2000) showed a 28% reduction in ammonia emissions from dairy cows that were fed a diet containing 9.5% crude protein. Another study (Whitney et. al., 1999) showed that reducing the amount of sulfur in feeds and water reduced the amount of hydrogen sulfide and odor emissions from manure. Decreasing the digestive tract pH by increasing the level of calcium benzoate in sow diets achieved a reduction in ammonia emissions of up to 53% (Mroz et. al, 1998). One study (Sutton et al., 1992) showed a 56% decrease in ammonia emissions from manure from swine fed the yucca extract.

Summary of Cost Data

No cost information for diet manipulation was found in the literature review. However, dietary manipulation has the potential of reducing feed costs. Additional research is needed to

determine if diet manipulation adversely affects the animal's health or the productivity of the operation.

9.2.15 Carcass Disposal

Description and Applicability of Technique

In all livestock and poultry AFOs, premature animal deaths occur. Decomposition of animal carcasses can emit reduced gases (ammonia, hydrogen sulfide, methane, and VOC) and pathogenic bacteria to the atmosphere if the carcasses are not disposed of in a timely and proper manner. Chicken, turkey, and swine carcasses through the nursery stage of production are most commonly disposed of on-site either by composting, burial, or incineration. If disposal cannot be achieved within 24 hours, carcasses can be refrigerated to slow the decomposition process and thus minimize gaseous emissions.

Dairy, beef cattle, and feeder pig carcasses usually are disposed of by rendering off-site. In this report, only the techniques for on-site carcass disposal are addressed because emissions from rendering occur off-site.

Summary of Performance and Cost Data

No data for characterizing the percent reduction achieved using the various methods of animal carcass handling and disposal are available. No secondary impacts for carcass disposal operations were identified during the literature review. However, carcass incineration has the potential for generating emissions of particulates and other air pollutants (carbon dioxide, nitrogen oxides, and sulfur dioxide emissions and products of incomplete combustion). In many States, incinerators for animal carcass disposal are subject to regulation under State air quality statutes with the requirements of operating permits that specify limits for PM emissions and other air pollutants. With carcass composting, PM emissions are limited to land application of the composted residue and then only if the composted carcasses have a low moisture content.

Limited information about the cost of carcass composting facilities was found in the literature. According to one article (Carter, et al., 1993), the cost of a carcass composting facility for 25,000 birds of turkey confinement capacity would be approximately $3,500.

9.3 Land Application

As discussed in chapter 7.0, the majority of animal manure (both solid and liquid) generated by AFOs is applied to cropland or pasture for ultimate disposal. Particulate matter emissions associated with land application depend on the manure moisture content. Land application of manure handled as a solid, such as broiler and turkey litter, can be a significant source of PM emissions during and after land application. If present, ammonia, hydrogen sulfide, methane, and VOC will also be emitted during and following land application. The magnitudes of these emissions depend on: (1) the method of application, and (2) the time of direct exposure of the applied manure to the atmosphere.

Solid manure is always applied to the soil surface while slurry and liquid manures can be either applied to the soil surface or injected into the soil. Both tractor drawn and truck mounted spreaders are used for application of manure to cropland pasture. Irrigation also is used for the disposal of liquid manure. Liquid manure from spreaders may be discharged under pressure using a splash plate to achieve a uniform spray pattern or distributed on the soil surface using devices, such as band spreaders. The objective of using band spreaders, which distribute manure at ground level, is to reduce the surface area of manure exposed to the atmosphere during and after spreading. Equipment for injection of liquid or slurry manures has been available for several decades. There are several different types of direct injection techniques (e.g., shallow, deep), but the common characteristic is that they produce channels or holes for accepting the manure, which are subsequently closed by using a wheel or disc.

9.3.1 Particulate Matter Emissions From Land Application

Description and Applicability of Technique

Suppression of PM emissions during and after land application of dry manure could be achieved by either increasing manure moisture content before spreading or by using water sprays during or after spreading or both. However, neither can be considered as practical options. Increasing moisture content before spreading would require thorough mixing to insure uniform moisture distribution and the volume of water required for water sprays would be prohibitive. However, a minimal degree of irrigation during and after spreading is a seemingly feasible option if sprinkler irrigation is available. However, most cropland and pastures used for manure disposal are not irrigated. Another feasible control option is avoiding the spreading of dry manure during windy conditions to reduce entrainment of PM.

Summary of Performance and Cost Data

No data for characterizing the performance or cost of using irrigation systems during land application of animal manure or for conducting applications only during favorable weather conditions were found in the literature review.

No secondary impacts are expected, other than the emissions from fuel combustion in the vehicles used to apply the water.

9.3.2 Gaseous Emissions From Land Application

Description and Applicability of Technique

Suppression of gaseous emissions can be achieved by reducing the amount of time that the applied manure is exposed to the atmosphere. This can be accomplished by rapidly incorporating the applied manure into the soil. In general, a technique that applies and incorporates the manure in a single step will have lower emissions than a technique that requires

several steps. For example, applying manure using direct injection methods will reduce emissions when compared to band spreading followed by disking or plowing since direct injection applies and covers the manure in a single pass of the machinery. When manure is incorporated into the soil, ammonia, VOC, and hydrogen sulfide are absorbed onto soil particles providing the opportunity for oxidation by soil microorganisms to nitrates, sulfates, carbon dioxide and water.

Summary of Performance Data

Land application of liquid manure using band spreaders with rapid incorporation into the soil (e.g., disking) has been shown to reduce gaseous emissions by 55 to 60%, compared to conventional broadcasting application using splash plate spreaders (Ministry of Agriculture FaF, 1992). One study (Burton, 1997) that summarized the available European data from 1992 to1997 showed that land application using a drag shoe for direct incorporation achieved reductions of 63 to 73% (depending on the type of land receiving the manure), compared to conventional broadcasting application.

Higher reductions of gaseous emissions have been reported using direct injection of the manure slurry into the soil. Studies have shown that ammonia reductions from 87 to 98% (Burton, 1997) can be achieved using direct injection (at various depths). Additionally, acidification of the manure slurry just prior to land application has been shown (Burton, 1997; Berg and Horing, 1997) to achieve reductions of ammonia but no quantitative reductions were given in these studies.

No secondary impacts are expected with these suppression techniques, other than the gaseous emissions from additional fuel combusted in the vehicles used to incorporate the manure, relative the amount of fuel needed to apply the manure.

Summary of Cost Data

The literature review found one study that presented the cost of incorporation equipment (facilities were assumed to have existing equipment for manure distribution). The study (Lazarus, 1999) found that disk harrows, used for incorporating liquid and solid manures, ranged in price from $5,600 to $34,000 depending on their size and functionality. However, a disk harrow is a standard piece of tillage equipment on most farms engaged in crop production. Annual operation and maintenance costs were estimated to be 2% of the capital cost ($400 annually) plus an additional $30/hr for tractor operation and $10/hr for labor. Another study (USEPA, 1998) reported that the cost of a 4,200-gallon tank with injectors had a capital cost of about $20,000. One study (Wright, 1997) reported that tanker spreaders without injectors cost between $9,000 and $18,500, depending on the size; a 4,500-gallon tanker costs $14,000.

9.4 References

Berg, W. and G. Hornig. 1997. Emission Reduction by Acidification of Slurry - Investigations and Assessment. J.A.M. Voermans, G. Monteny (Eds). Procs. of the Intl. Symp. on Ammonia and Odour Control from Animal Production Facilities Vinkeloord, The Netherlands. Rosmalen, The Netherlands: NVTL. 2: pp. 459-466.

Boyette, R. A. 1998. Getting Down to (Biofilter) Basics. Biocycle 39(5):58-62.

Bundy, D.S. 1984. Rate of Dust Decay as Affected by Relative Humidity, Ionization and Air Movement [In Animal Confinement Buildings]. Transactions of the American Society of Agricultural Engineers (ASAE). 27(3):865-70.

Bundy, D.S. 1991. Electrical charge plays role in dust-collection system. Feedstuffs. 63(12):30.

Burton, C. H., editor. 1997. Manure Management–Treatment Strategies for Sustainable Agriculture. Bedford, United Kingdom: Silsoe Research Institute. p. 181.

Carpenter, G. A. and J. T. Fryer. 1990. Air Filtration in a Piggery: Filter Design and Dust Mass Balance. Journal of Agricultural Engineering Research 46(3):171-86. ill.

Carter, T.A., K.E. Anderson, J. Arends, J.C. Barker, S.S. Bunton, B. Hawkins, J. Parsons, Rives, S.E. Scheideler, S.M. Stringham, and M.J. Winel. 1993. Composting Poultry Mortality: Poultry Science and Technology Guide. North Carolina State University, North Carolina Cooperative Extension Service, Raleigh, North Carolina. December 1993.

Chiba, L. I., E.R. Peo Jr. and A. J. Lewis. 1987. Use of Dietary Fat to Reduce Dust, Aerial Ammonia and Bacterial Colony Forming Particle Concentrations in Swine Confinement Buildings. Transactions of the American Society of Agricultural Engineers (ASAE). 30(2):464-8.

Clanton, C.J., D.R. Schmidt, L.D. Jacobson, R.E. Nicolai, P.R. Goodrich, and K.A. Janni. 1999. Swine Manure Storage Covers for Odor Control. Applied Engineering in Agriculture (In press).

ERG. 2000. Summary of Literature Search and Review to Characterize AFO Air Emissions. Memorandum from Eastern Research Group, Inc. (ERG) to U. S. Environmental Protection Agency (USEPA). Eastern Research Group (ERG). October 27, 2000.

Heber, A., D. Jones, and A. Sutton. 1999. Methods and Practices to Reduce Odor from Swine Facilities. Purdue University Cooperative Extension Service. West Lafayette, Indiana.

Heber, A.J. and C.R. Martin. 1988. Effect of Additives on Aerodynamic Segregation of Dust from Swine Feed. Transactions of the American Society of Agricultural Engineers (ASAE). 31(2):558-63.

James, T., D. Meyer, E. Esparza, E. Depeters, and H. Perez-Monti. 2000. Effects of Dietary Nitrogen Manipulation on Ammonia Volatilization from Manure from Holstein Heifers. Journal of Dairy Science.

Johnson, J. 1997. Final Report: Evaluation of Commercial Manure Additives. Agricultural Utilization Research Institute (AURI). October 1, 1997.

Lais, S., E. Hartung, and T. Jungbluth. 1997. Reduction of Ammonia and Odour Emissions by Bioscrubbers. Voermans JAM, Monteny G, editors. Proceedings of the International Symposium on Ammonia and Odour Control from Animal Production Facilities Vinkeloord. The Netherlands. Rosmalen, The Netherlands: NVTL. 2: 533-536.

Lazarus, W.F. 1999. Farm Machinery Economic Costs for 1999: Minnesota Estimates with Adjustments for Use in Canada. Staff Paper p. 99-5. University of Minnesota, Department of Applied Economics, St. Paul, Minnesota.

Leson, G. and A.M. Winer. 1991. Biofiltration: An Innovative Air Pollution Control Technology for VOC Emissions. Journal of the Air and Waste Management Association. 41(8):1045-54.

Mankell, K.O., K.A. Janni, R.D. Walker, M.E. Wilson, J.E. Pettigrew, L.D. Jacobson, and W.F. Wilcke. 1995. Dust Suppression in Swine Feed Using Soybean Oil. Journal of Animal Science. 73(4):981-5.

Mannebeck, H. 1985. Covering Manure Storing Tanks to Control Odour. V.C. Nielsen, J.H. Voorburg and P. L'Hermite. editors. Odour Prevention and Control of Organic Sludge and Livestock Farming. London: Elsevier Applied Science. pp. 188-93.

McCrory, D.F. and P.J. Hobbs. 2001. Additives to Reduce Ammonia and Odor Emissions from Livestock Wastes: A Review. Journal of Environmental Quality. 30:345-355.

Ministry of Agriculture FaF. 1992. Code of Good Agricultural Practice for the Protection of Air. London, United Kingdom: MAFF Publications.

Moller, F. Stovreduktion I stalde ved ionisering. (Dust Reduction by Ionization). SJF orientering nr 74. Bygholm, 8700 Horsens, Denmark: National Institute of Agricultural Engineering.

Mroz, Z., W. Krasucki, and E. Grela. 1998. Prevention of Bacteriuria and Ammonia Emission by Adding Sodium Benzoate to Diets for Pregnant Sows. Proc. Annual Mtg. EAAP Vienna, Austria.

NCSU. 1998. Control of Odors from Animal Operations. North Carolina Agricultural Research Service, North Carolina State University (NCSU), Swine Odor Task Force. Raleigh, North Carolina.

Pearson, C.C. 1989. Air Cleaning with Wet Scrubbers. Farm Buildings and Engineering 6(2):36-9.

Priem, R. 1977. Deodorization by Means of Ozone. Agriculture and Environment 3(2/3):227-37.

Ritter, W.F., N.E. Collins, Jr., and R.P. Eastburn. 1975. Chemical Treatment of Liquid Dairy Manure to Reduce Malodors. Managing Livestock Wastes. pp. 381-84.

Roos, K.F., M.A. Moser, and A.G. Martin. 1999. AgSTAR Charter Farm Program: Experience with Five Floating Lagoon Covers. Presented at Fourth Biomass Conference of the Americas, Oakland, California, August 29- September 2, 1999.

Sommer, S. G., B.T. Christensen, N.E. Nielsen, and J.K. Schjorring. 1993. Ammonia Volatilization During Storage of Cattle and Pig Slurry: Effect of Surface Cover. Journal of Agricultural Science 121(pt.1):63-71.

Sweeten, J.M., L. Erickson, P. Woodford, C.B. Parnell, K. Thu, T. Coleman, R. Flocchini, C. Reeder, J.R. Master, W. Hambleton, G. Blume, and D. Tristao. 2000. Air Quality Research and Technology Transfer Programs for Concentrated Animal Feeding Operations. Draft Report. Presented at United States Agricultural Air Quality Task Force Meeting, July 18 and 19, 2000, Washington, DC.

Sutton, A.L., S.R. Goodall, J.A. Patterson, A.G., Mathew, D.T., Kelly and K.A. Meyerholtz. 1992. Effects of Odor Control Compounds on Urease Activity in Swine Manure. Journal of Animal Science 70(Suppl. 1):160.

Takai, H., L.D. Jacobson, and S. Pedersen. 1996. Reduction of Dust Concentration and Exposure in Pig Buildings by Adding Animal Fat in Feed. Journal of Agricultural Engineering Research 63(2):113-20.

Takai, H., F. Moller, M. Iverson., S.E. Jorsa, and V. Bille-Hansen. 1993. Dust Control in Swine Buildings by Spraying of Rapeseed Oil. Livestock Environment IV: 4th International Symposium Coventry, England. St. Joseph, MI: American Society of Agricultural Engineers (ASAE). p. 726-733.

University of Minnesota. 1999. Generic Environmental Impact Statement on Animal Agriculture: A Summary of the Literature Related to Air Quality and Odor (H).

USEPA. 1998. Site Visit Report to Iowa and Minnesota. Prepared by P. Shriner. U.S. Environmental Protection Agency (USEPA). May 1998.

USEPA. 2000. AgSTAR Digest. U.S. Environmental Protection Agency (USEPA). Office of Air and Radiation. EPA-430/F-00-012.

Whitney, M. H., R. Nicolai, and G.C. Shurson. 1999. Effects of Feeding Low Sulfur Starter Diets on Growth Performance of Early Weaned Pigs and Odor, Hydrogen Sulfide, and Ammonia Emissions in Nursery Rooms. Proceeding from Midwest ASAS/ADSA Annual Meeting, Des Moines, Iowa.

Wright, P. 1997. Survey of Manure Spreading Costs Around York, New York. ASAE Paper No. 972040. Presented at the ASAE Annual International Meeting, American Society of Agricultural Engineers (ASAE), Minneapolis, Minnesota, August 10-14, 1997.

Zahn, J.A., A.E. Tung, B.A. Roberts, and J.L. Hatfield. 2001. Abatement of Ammonia and Hydrogen Sulfide Emissions from a Swine Lagoon Using a Polymer Biocover. Journal of the Air and Waste Management Association. 51:562-573.

Zhang, Y., A. Tanaka, E.M. Barber, and J.J.R Feddes. 1996. Effects of Frequency and Quantity of Sprinkling Canola Oil on Dust Reduction in Swine Buildings. Transactions of the American Society of Agricultural Engineers (ASAE). 39(3):1077-81.

Zhang, Y., and W. Gaakeer 1996. A Low Cost Balloon-type Lagoon Cover to Reduce Odour Emission. Conference Proceedings: International Conference on Air Pollution from Agricultural Operations, Kansas City, Missouri. Midwest Plan Service. pp. 395-401, Ames, Iowa.

10.0 GLOSSARY

Aerobic	Occurring in the presence of free oxygen; capable of living or growing in the presence of free oxygen, such as aerobic bacteria.
Aerobic bacteria	Bacteria that require free elemental oxygen for growth. Oxygen combined with another element such as in carbon dioxide will not support aerobic microbial growth.
Agronomic rates	The land application of animal wastes at rates of application of nitrogen and phosphorous and other plant nutrients that do not exceed crop requirements for optimum yield.
Anaerobic	Occurring in the absence of free or dissolved oxygen; capable of living and growing in the absence of oxygen, such as anaerobic bacteria.
Anaerobic bacteria	Bacteria not requiring the presence of free or dissolved oxygen.
Anaerobic lagoon	A facility to stabilize livestock or poultry manure using anaerobic microorganisms to reduce organic compounds to methane and carbon dioxide.
Animal feeding Operation (AFO)	A lot or facility (other than an aquatic animal production facility) where animals have been, are, or will be stabled or confined and fed or maintained for a total of 45 days or more in any 12-month period, and the animal confinement areas do not sustain crops, vegetation, forage growth, or postharvest residues in the normal growing season. Two or more animal feeding operations under common ownership are a single animal feeding operation if they adjoin each other or if they use a common area or system for the disposal of wastes.
Animal population	The number of animals confined at a single point in time.
Animal unit	A unit of measure that is used to compare different animal species. While there are other definitions, this report uses the definition of animal unit developed by the USEPA Office of Water (66 FR 2960-3138), as follows: 1 cattle excluding mature dairy and veal cattle; 0.7 mature dairy cattle; 2.5 swine weighing over 55 pounds; 10 swine weighing 55 pounds or less; 55 turkeys; 100 chickens; and 1 veal calf.
APHIS	Animal and Plant Health Inspection Service, United States Department of Agriculture.
Biogas	A combustible mixture of methane and carbon dioxide produced by the bacterial decomposition of organic wastes under anaerobic conditions that may be used as a fuel.

Broilers	Chickens of either sex specifically bred for meat production and marketed at approximately 7 weeks of age.
Census of Agriculture	The census of agriculture conducted every 5 years by USDA. The last census was conducted in 1997. The census is a major source of information about the structure and activities of agricultural production at the national, State, and county levels.
Concentrated Animal Feeding Operations (CAFO)	A term used by the USEPA Office of Water to determine which AFOs are point sources subject to the National Pollutant Discharge Elimination System (NPDES) permit system. Currently, 40 CFR 122.23 defines a CAFO as an animal feeding operation that confines 1,000 animal units or more at any one time, or that is designated as a CAFO on a case-by-case basis (according to 40 CFR 122.23).
Denitrification	The chemical or biological reduction of nitrate or nitrite with molecular nitrogen (N_2) as the primary end product. Other possible end products are nitrous oxide (N_2O) and nitric oxide (NO).
Digestion	The process whereby organic matter is broken down by microorganisms into simpler and/or more biologically stable products, (e.g., organic carbon to carbon).
Drylots	Open feedlots sloped or graded from 4 to 6 percent to promote drainage away from the lot to provide consistently dry areas for cattle to rest. Drylots may be paved, unpaved, or partially paved.
Farm capacity	The maximum number of animals that can be confined at any one time.
Farrowing	The act of giving birth to pigs by the sow.
Forage	Animal feed consisting of legumes and grasses.
Farrow-to finish	Contains all three hog production phases: farrow, nursery, finish.
Feedlot	A concentrated, confined animal or poultry growing operation for meat, milk, or egg production, or stabling, in pens or houses wherein the animals or poultry are fed at the place of confinement and crop or forage growth or production is not sustained in the area of confinement, and is subject to 40 CFR 412.
Feeder pig	A young, weaned pig of approximately 40 to 60 pounds.
Flushing system	A system that collects and transports or moves waste material with the use of water, such as washing of pens and flushing of confinement livestock facilities.
Heifer	A young cow that has not given birth to a calf.

Hen	A mature female chicken.
Injection	The incorporation of a liquid or slurry into the soil in a single operation.
Injector	A tillage implement that cuts into the soil depositing liquid or slurry.
Integrators	Companies that supply animals, feed, medicines, transportation, and technical help under contract.
Irrigation	Application of water and liquid wastes to land for agricultural purposes.
Land application	Application of manure to land to utilize the nutrients and organic matter present for crop production.
Layer	A mature hen that is producing eggs for human consumption.
Live weight	The average weight of an animal over the period of its confinement.
Manure	For this report, manure is fecal matter and urine. When other materials are added to manure (e.g., bedding material, waste feeds), the mixture also is considered to be manure. Manure may be in a solid, slurry, or liquid form and include any added water including wash water and collected surface runoff from open confinement areas.
Manure management System	Facilities and equipment used for the collection, handling, stabilization (if present), and storage of manure prior to land application.
Mineralization	The microbial transformation of an element from an organic to an inorganic state (e.g., the conversion of organic nitrogen to ammonia and the conversion of organic carbon to carbon dioxide or methane).
NAHMS	National Animal Health Monitoring System, United States Department of Agriculture.
NASS	National Agricultural Statistics Service, United States Department of Agriculture.
Nitrification	The microbially mediated biochemical transformation by oxidation of ammonium (NH_4^+) to nitrite (NO_2^-) or nitrate (NO_3^-).
pH	The negative logarithm of the hydrogen ion concentration. The pH scale ranges from zero to 14. Values below 7 are considered acidic and those above, alkaline.
PM	Any airborne, finely divided solid or liquid matter with an aerodynamic diameter less than or equal to 100 micrometers.

PM 10	Particulate matter with an aerodynamic diameter less than or equal to 10 micrometers.
PM 2.5	Particulate matter with an aerodynamic diameter less than or equal to 2.5 micrometers.
Poult	A newly hatched turkey.
Pullet	An immature female chicken.
Runoff	Overland flow generated by precipitation or irrigation.
Silage	A preserved form of animal feed created through an anaerobic acid fermentation of green forage crops or roughage (e.g., corn stalks, sorghum, legumes, and grasses).
Slurry	Manure with a total solids concentration of between approximately 5 and 15 percent. Slurries with a total solids concentration of less than 10 percent are pumpable. Above a total solids concentration of 10 percent, slurries are semisolids with a negligible angle of repose and can be scraped but nit stacked for storage.
Supernatant	The liquid fraction above settled solids in a lagoon or storage tank.
Veal calf	A calf fed a liquid diet at an age of up to 8 weeks and a live weight of up to 190 pounds.
Volatile Solids	Those solids lost upon ignition at 550°C (using Method 2540 E of the American Public Health Association). Volatile solids provide an approximation of organic matter (carbon) present.

APPENDIX A

LISTING OF CHEMICAL SUBSTANCES IDENTIFIED IN AND AROUND LIVESTOCK MANURE (ADAPTED FROM O'NEILL AND PHILLIPS 1992)

The following table lists 168 chemical compounds (and their synonyms) that have been identified in manure and in the air around various livestock operations. This list of compounds is an adaptation of the information found in "A Review of the Control of Odour Nuisance from Livestock Buildings: Part 3, Properties of the Odorous Substances which have been identified in livestock wastes or in the air about them," by D. H. O' Neill and V. R. Phillips (Journal of Agricultural Engineering Research, 1992, 53, 23-50). This same information is also presented in the "Generic Environmental Impact Statement on Animal Agriculture: A Summary of the Literature Related to Air Quality and Odor," prepared for the Minnesota Environmental Quality Board. The data comes entirely from a review of available literature. In addition to the chemical compound name(s), a column has been added (EPA Classification) that identifies the substances that have been classified by EPA as being a hazardous air pollutant (HAP), volatile organic compound (VOC), or a criteria air pollutant (criteria). In a few cases, the compound does not fall into any of the above categories (i.e., acetone). In these particular instances, the classification field is left blank.

Appendix A.

Listing of Chemical Substances Identified In and Around Livestock Manure (Adapted from O'Neill and Phillips 1992)

	Compound (names)	EPA Classification
	Carboxylic Acids	
1	formic acid methanoic acid	VOC
2	acetic acid ethanoic acid	VOC
3	propionic acid propanoic acid	VOC
4	n-butyric acid butanoic acid	VOC
5	i-butyric acid 2-methylpropanoic acid	VOC
6	n-valeric acid pentanoic acid	VOC
7	i-valeric acid 3-methylbutanoic acid	VOC
8	2-methylbutanoic acid	VOC
9	2-methly-2-butenoic acid (angelic acid)	VOC
10	n-caproic acid hexanoic acid	VOC
11	i-caproic acid 4-methylpentanoic acid	VOC
12	2-methlypentanoic acid	VOC
13	oenanthic acid heptanoic acid	VOC
14	caprylic acid octanoic acid	VOC
15	pelargonic acid nonanoic acid	VOC
16	capric acid decanoic acid	VOC
17	hendecanoic acid undecanoic acid	VOC

Appendix A.

Listing of Chemical Substances Identified In and Around Livestock Manure (Adapted from O'Neill and Phillips 1992) (Continued)

	Compound (names)	EPA Classification
18	lauric acid dodecanoic acid	VOC
19	tredecanoic acid	VOC
20	myristic acid tetradecanoic acid	VOC
21	benzoic acid benzenecarboxylic acid	VOC
22	penylacetic acid phenylethanoic acid α-toluic acid	VOC
23	3-phenylpropionic acid 3-phenylpropanic acid hydrocinnamic acid	VOC
Alcohols		
24	methanol methylalcohol	HAP, VOC
25	ethanol ethyl alcohol	VOC
26	n-propyl alcohol l-propanol	VOC
27	i-propyl alcohol 2-propanol	VOC
28	n-butyl alcohol l-butanol	VOC
29	sec-butyl alcohol 2-butanol	VOC
30	isobutyl alcohol 2-methyl-l-propanol	VOC
31	pentanol n-amyl alcohol	VOC
32	i-pentanol 3-methylbutanol iso-amyl alchol	VOC
33	l-hexanol n-hexyl alcohol	VOC

Appendix A.

Listing of Chemical Substances Identified In and Around Livestock Manure (Adapted from O'Neill and Phillips 1992) (Continued)

	Compound (names)	EPA Classification
34	hex-3-ene-1-ol	VOC
35	2-methy-2-pentanol demethyl-n-propyl-carbinol	VOC
36	l-heptanol	VOC
37	iso-heptanol	VOC
38	3-octanol amylethyl alcohol	VOC
39	2-ethylhexanol	VOC
40	2-methoxyethanol methyl cellosolve methyl glycol	VOC
41	2-ethoxy-l-propanol	VOC
42	2,3-butanediol	VOC
43	benzyl alcohol hydroxytoluene	VOC
44	α-methlbenzyl alcohol	VOC
45	4-methylcyclohexanol	VOC
46	2-penylethanol	VOC
Phenolics		
47	phenol carbolic acid benzenol hydroxybenzene	HAP, VOC
48	p-cresol 4-hydroxytoluene 4-methylphenol	HAP, VOC
49	m-cresol 3 hydroxytoluene 3-methylphenol	HAP, VOC
50	o-cresol 2-hydroxytoluene 3-mthylphenol	HAP, VOC

Appendix A.

Listing of Chemical Substances Identified In and Around Livestock Manure (Adapted from O'Neill and Phillips 1992) (Continued)

	Compound (names)	EPA Classification
51	p-methoxyphenol 4-methoxyphenol hydroquinone mono-methylether	VOC
52	o-methoxyphenol 2-methoxyphenol guaiacol	VOC
53	p-ethylphenol 4-ethylphenol 1-ethyl-4-hydroxybenzene	VOC
54	m-ethylphenol 3-ethylphenol 1-ethyl-3-hydroxybenzene	VOC
55	o-ethylphenol 2-ethylphenol 1-ethyl-2-hydroxybenzene phlorol	VOC
56	2,6-dimethyl phenol 1,3-diethyl 2-hydroxybenzene	VOC
57	3,4-dimethylphenol 1,3-dimethyl- 5-hydroxybenzene	VOC
58	3-hydroxy-2-methyl-4-pyrone lanxinic acid maltol	VOC
Aldehydes		
59	formaldehyde methanal	HAP, VOC
60	acedtaldehyde ethanal	HAP, VOC
61	propionaldehyde propanal	HAP, VOC
62	acrolein 2-propenal acrylaldehyde	HAP, VOC
63	butyraldehyde butanal	VOC

Appendix A.

Listing of Chemical Substances Identified In and Around Livestock Manure (Adapted from O'Neill and Phillips 1992) (Continued)

	Compound (names)	EPA Classification
64	iso-butyraldehyde 2-methyl propanal	VOC
65	crotonaldehyde 2-butenal	VOC
66	valeraldehyde pentanal	VOC
67	iso-valeraldehyde 3-methylbutanal	VOC
68	2-pentenal	VOC
69	caproaldehyde hexanal	VOC
70	2-hexenal	VOC
71	oenanthaldehyde heptanal	VOC
72	2-heptenal	VOC
73	2,3-heptadienal	VOC
74	caprylaldehyde octanal	VOC
75	pelargonaldehyde nonanal	VOC
76	2-nonenal	VOC
77	2,4-nonadienal	VOC
78	capraldehyde decanal decylaldehyde	VOC
79	2,4-decadienal	VOC
80	benzaldehyde benzenecarbonal	VOC
81	acetone dimethylketone (2-)propanone	

Appendix A.

Listing of Chemical Substances Identified In and Around Livestock Manure (Adapted from O'Neill and Phillips 1992) (Continued)

	Compound (names)	EPA Classification
82	diacetyl dimethylglyoxal 2,3-butanedione	VOC
83	(2-)butanone methylethylketone	HAP, VOC
84	acetoin 3-hydroxy-2-butanone	VOC
85	3-pentanone diethylketone propione	VOC
86	cyclopentanone adipic ketone	VOC
87	2-methyl cyclopentanone	VOC
88	2-octanone hexylmethylketone	VOC
89	amylvinylketone 1-octene-3-one	VOC
90	acetophenone acetylbenzene methylphenylketone	HAP, VOC
	Esters	
91	methylformate formic acid methyl ester	VOC
92	methylacetate acetic acid methyl ester	VOC
93	elthylformate formic acid ethyl ester	VOC
94	ethyl acetate acetic acid ethyl ester	VOC
95	propylacetate acetic acid propyl ester	VOC

Appendix A.

Listing of Chemical Substances Identified In and Around Livestock Manure (Adapted from O'Neill and Phillips 1992) (Continued)

	Compound (names)	EPA Classification
96	i-propylacetate acetic acid isopropyl ester	VOC
97	butylacetate acetic acid butyl ester	VOC
98	i-butylacetate acetic acid isobutyl ester	VOC
99	i-propylpropionate propanoic acid iso-propyl ester	VOC
Nitrogen heterocycles		
100	indole l-benzopyrrole	VOC
101	skatole 3-methylindole	VOC
102	pyridine azine	VOC
103	3-aminopyridine	VOC
104	(2)-methylpyrazine	VOC
105	methylpyrazine	VOC
106	trimethylpyrazine	VOC
107	tetramethylpyrazine	VOC
Amines		
108	methylamine aminomethane	VOC
109	ethylamine aminoethane	VOC
110	n-propylamine aminopropane	VOC
111	i-propylamine amino iso-propane	VOC

Appendix A.

Listing of Chemical Substances Identified In and Around Livestock Manure (Adapted from O'Neill and Phillips 1992) (Continued)

	Compound (names)	EPA Classification
112	pentylamine 1-aminopentane amylamine	VOC
113	trimethylamine	VOC
114	triethylamine	HAP, VOC
	Sulphides	
115	carbon disulphinde	HAP, VOC
116	carbonylsulphide carbon oxysulphide	HAP, VOC
117	dimethylsulphide methylthiomethane	VOC
118	diethylsulphide ethylthioethane	VOC
119	dimethyldisulphide meethydithiomethane	VOC
120	dimethltrisulphide methyldithiomethane 2,3,4 -trithiapentane	VOC
121	diethyldisulphide ethyldithioethane	VOC
122	dipropyldisulphide propyldithiopropane	VOC
123	methylpropyldisulphide methyldithioprapane	VOC
124	propylporop-1-enyl disulphide	VOC
125	diphenylsulphide phenylthiobenzene	VOC
126	3,5-dimethyl-1,2,4- trithiolane	VOC
127	3-methyl-5-propyl-1,2,4- trithiolane	VOC
128	3,6-dimethyltetra-thiane	VOC
129	2,6-dimethylthi- 3-inc-carbonaldehyde	VOC

Appendix A.

Listing of Chemical Substances Identified In and Around Livestock Manure (Adapted from O'Neill and Phillips 1992) (Continued)

	Compound (names)	EPA Classification
Thiols (mercaptans)		
130	methanethiol methyl mercaptan	VOC
131	ethanethiol ethylmercaptan	VOC
132	propanethiol n-propylmercaptan	VOC
133	2-propanethiol isopropylmercaptan	VOC
134	2-propene-1-thiol allylmercaptan	VOC
135	butanethiol n-butylmercaptan	VOC
136	2-butene-1-thiol crotylmercaptan	VOC
137	benzenethiol thiophenol	VOC
138	α-toluenethiol benzylmercaptan	VOC
Unclassified		
142	sulphur dioxide	Criteria
143	methane	
144	pentane	VOC
145	2-methylpentane	VOC
146	hexane	HAP, VOC
147	hexene	VOC
148	heptane	VOC
149	octane	VOC
150	octene	VOC
151	undecene hendecene	VOC

Appendix A.

Listing of Chemical Substances Identified In and Around Livestock Manure (Adapted from O'Neill and Phillips 1992) (Continued)

	Compound (names)	EPA Classification
152	dodecane	VOC
153	benzene	HAP, VOC
154	toluene	HAP, VOC
155	xylene dimethylbenzene (isomer not specified)	HAP, VOC
156	indane hydrindene	VOC
157	napththalene	HAP, VOC
158	methylnaphthalene	VOC
159	chloroform trichloromethane	HAP, VOC
160	tetrachloroethane perchloroethylene	VOC
161	hydrazine	HAP, VOC
162	2-methylfuran sylvan	VOC
163	2-pentylfuran	VOC
164	2-methylthiophene 2-methylthiofuran	VOC
165	2,4-dimethylthiophene 2,4-thioxene	VOC
166	diethylether ether ethoxyethane	VOC
167	limonene citrene carvene	VOC
168	ocimene	VOC

APPENDIX B

COMPLETE LIST OF REFERENCES REVIEWED

Appendix B.

Complete List of References Reviewed

Author(s)	Title	Year
Aarnink, A. et al.	Factors Affecting Ammonium Concentrations in Slurry from Fattening Pigs	1993a
Aarnink, A. et al.	Factors Affecting Ammonia Emission from Housing for Weaned Piglets	1993b
Aber, et al.	Nitrogen Saturation in Temperate Forest Ecosystems	1998
Ahring, et al.	Volatile fatty acids as indicators of process imbalance in anaerobic digestors	1994
Ahring, et al.	Anaerobic Treatment of Manure together with Industrial Waste	1992
Aldrich, et al.	Land Application of Poultry Lagoon Effluent	1997
Al-Kanani, et al.	Odor Control in Liquid Hog Manure by Added Amendments and Aeration	1992a
Al-Kanani, T., E. Akochi, A.F. MacKenzie, I. Alli, S. Barrington	Organic and Inorganic Amendments to Reduce Ammonia Losses from Liquid Hog Manure	1992b
Allen, A. et al.	A meso-scale study of the behavior of atmospheric ammonia and ammonium	1988
Allen, Jarvis, Headon	Nitrous Oxide Emissions from Soils Due to Inputs of Nitrogen from Excreta Return by Livestock on Grazed Grassland in the U.K.	1996
Amberger, A.	Ammonia Emissions During and After Land Spreading of Slurry.	1991
Andersson, M.	Reducing ammonia emissions by cooling of manure in manure culverts	1998
Aneja, V., J. Chauhan, J. Walker	Characterization of atmospheric ammonia emissions from swine waste storage and treatment lagoons	2000
Aneja, et al.	Ammonia Emissions from Swine Waste Operations in North Carolina	1999
Aneja, Li, Walker, Chauhan, Murray, McCulloch	Measurement of Ammonia Emissions from Animal Operation in North Carolina, U.S.A.	1997
Aneja, Murray, Southerland	Atmospheric Nitrogen Compounds: Emissions, Transport, Transformation, Deposition, and Assessment	1998
Angelidaki, Ahring	Thermophilic anaerobic digestion of livestock waste: the effect of ammonia	1993
Angelidaki, Ahring	Effects of free long-chain fatty acids on thermophilic anaerobic digestion	1992
ApSimon, et al.	Ammonia Emissions and Their Role in Acid Deposition	1987
ApSimon, Kruse-Plass	The Role of Ammonia as an Atmospheric Pollutant	1991
Arave, et al.	Effect of Added Processed Poultry Waste on Dairy Heifers' Preference for Concentrates	1988
Arogo, et al.	Mass Transfer coefficient of Ammonia in liquid Swine manure and Aqueous Solutions	1999a
Arogo, et al.	Mass Transfer Coefficient for Hydrogen Sulfide Emission from Aqueous Solutions and Liquid Swine Manure	1999b
Arts, et al.	Successional Changes in the Soft Water Macrophyte Vegetation of (sub) Atlantic Sandy, Lowland Regions during this Century	1990
Arya, S., V. Aneja, B. T. Peterson, N. Agrawal	Measurement and Modeling of Ammonia/Ammonium Flux and Dry Deposition Velocity Above Natural Surfaces in Eastern North Carolina	1999
Asman, W. A. H.	Factors Influencing Local Dry Deposition of Gases with Special Reference to Ammonia	1998
Asman, et al.	Ammonia: Emission, Atmospheric Transport and Deposition	1998
Asman, Willhem	Ammonia emission in Europe: Updated emission and emission variations	1992
Ayuso, et al.	Biochemical and chemical-structural characterization of Different organic materials used as manures	1996

Appendix B.

Complete List of References Reviewed (Continued)

Author(s)	Title	Year
Banwart, W. L., J. M. Bremner	Identification of Sulfur Gases Evolved from Animal Manure	1975
Barnett, G.M.	Manure P Fractionization	1994a
Barnett, G.M.	Phosphorus Forms in animal manure	1994b
Barrington, Moreno	Swine Manure Nitrogen Conservation in Storage using Sphagnum Moss	1995
Barth, Hill, Polkowski	Correlating Odor Intensity Index and Odorous Components in Stored Dairy Manure	1973
Barthelmie, Pryor	Implications of Ammonia Emissions for Fine Aerosol Formation and Visibility Impairment- A Case Study from the Lower Frase Valley, British Columbia	1998
Battye, et al.	Evaluation of Available Control Measures, Potential Emission Reductions, and Costs of Control for Anthropogenic Agricultural Emissions of Nitrous Oxide.	1999
Berglund, Hall	Sludge and Slurry Disposal Techniques and Environmental Problems- A Review	1988
Berrang, Cox, Baily	Measuring Air-Borne Microbial Contamination of Broiler Cabinets	1995
Bobbink, et al.	The Effects of Airborne Nitrogen Pollutants on Species Diversity in Natural and Semi-Natural European Vegetation	1998
Boisen, S.	New Strategy for Optimizing Amino Acid Supply to Growing Pigs	1993
Bolan, et al.	Influence of low-molecular-weight organic acids on the solubilization of phosphates	1994
Bonazzi, G., L. Valli, S. Piccinini	Controlling Ammonia Emission from Poultry Manure Composting Plants	1988
Bouwman, A.F., D.S. Lee, W.A.H. Asman, F.J. Dentener, K. Van der Hoek, J. Olivier	A Global High-Resolution Emission Inventory for Ammonia	1997a
Bouwman, Hoek	Scenarios of Animal Waste production and Fertilizer Use and Associated Ammonia Emission for the Developing Countries	1997b
Bowman, L., C. Stoll, M. Palace, L. Linker, J. Thomas	Atmospheric Deposition Estimates of Nitrogen to the Atlantic and Gulf Coasts of the United States	1999
Braam, Smits, Gunnink, Swierstra	Ammonia Emission from a Double-Sloped Solid Floor in a Cubicle House for Dairy Cows	1997
Braam, Swierstra	Volatilization of Ammonia from Dairy Housing Floors with Different Surface Characteristics	1999
Brewer, Costello	In Situ Measurement of Ammonia Volatilization from Broiler Litter using an Enclosed Air chamber	1999
Brown, Whalen	Environmental Influences on Nitrification in Spray Fields Fertilized with Liquid Swine Effluent	1999
Brunnekreef, W.J.B.	Evaluation of Practical Applications for an Integrated Approach on Farm Level	1993
Buijsman, et al.	Anthropogenic NH3 Emissions in Europe	1987
Buiter, Hoff	Ammonia distribution in a Pit-ventilated Confinement building: One-half scale model study	1998
Burton, et al.	The Effect of Continuos Aerobic Treatment on the Fate of the Nitrogen Component in Piggery Slurry	1993

Appendix B.

Complete List of References Reviewed (Continued)

Author(s)	Title	Year
Burton, et al.	Three Methods to estimate N2O fluxes as impacted by Agricultural Management	1997
Bussink, D.W., O.Oenema	Ammonia volatilization from dairy farming systems in temperate areas: A review	1998
Cabrera, Chiang, Merka, Thompson, Pancorbo	Nitrogen transformations in Surface-Applied Poultry Litter: Effect of Litter Physical Characteristics	1993
Cabrera, M.L., S.C. Tyson, T.R. Kelley, O.C. Pancorbo, W.C. Merka, S.A. Thompson	Nitrogen Mineralization and Ammonia Volatilization from Fractionated Poultry Litter	1994a
Cabrera,M.L., T.R. Kelley, O.C. Pancorbo, W.C. Merka, S.A. Thompson	Ammonia Volatilization and Carbon Dioxide Emission from Poultry Litter: effects of Fractionation and Storage Time	1994b
Cai, Pancorbo, Barnhart	Chemical and Microbiological Characteristics of Poultry Processing By-Products, Waste and Poultry Carcasses During Lactic Acid Fermentation	1994
Cai, Pancorbo,Merka, Sander, Barnhart	Stabilization of Poultry Processing By-Products and Waste and Poultry Carcasses Through Lactic Acid Fermentation	1994
Carr, et al.	Empirical Models to Determine Ammonia Concentrations from Broiler Chicken Litter	1990
Chambers, et al.	Predicting nitrogen availability an losses following application of organic manures to arable land: MANNER	1999
Chambers, Smith	Nitrogen: Some Practical Solutions for the Poultry Industry	1998
Chang, et al.	Nitrous Oxide Emission from Long-Term Manured Soils	1998
Chen, et al.	Methane Production from Fresh versus Dry Dairy Manure	1987
Christensen, B. T.	Ammonia Loss From Surface-Applied Animal Slurry under Sustained Drying Conditions in Autumn	1988
Christianson, L.L, R. Zhang, D. Day, G. Riskowski	Effects of Building Design, Climate control, Housing System, Animal Behavior and Manure Management at Farm Levels on N-losses to the Air	1993
Clanton, et al.	Swine Manure Characterization as Affected by Environmental Temperature, Dietary Level Intake, and Dietary Fat Addition	1991
Clanton, et al.	Swine Manure Storage Covers for Odor Control	1999a
Clanton, Johnston, and Robinson	Odor emissions from mixtures of ground swine carcass material and liquid swine waste.	1999b
Clarkson, Misselbrook	Odour Emissions from Broiler Chickens	1991
Collins, E.	Ammonia Emissions from a large Swine Production Complex	1990
Comfort, S.D., K.A. kelling, D.R. Keeney, J.C. Converse	Nitrous Oxide Production from Injected Liquid Dairy Manure	1990
Cowell, ApSimon	Cost-effective Strategies for the Abatement of Ammonia Emissions from European Agriculture	1998

Appendix B.

Complete List of References Reviewed (Continued)

Author(s)	Title	Year
Cowell, David A., V. Roger Phillips, Robert W. Sneath	An Assessment of ways to abate ammonia emissions from livestock buildings and waste stores	1999a
Cowell, et al.	An Assessment of ways to abate ammonia emissions from UK livestock buildings and waste stores. Part 2: cost modeling	1999b
Cowling, E., C. Furiness, L. Smith, M. Henderson	Estimation of Atmospheric Deposition of Ammonium and Nitrate in North Carolina and Coastal Plain River Basins	1998a
Cowling et al.	Optimizing Air Quality Management in Europe and North America: Justification for Integrated Management of Both Oxidized and Reduced forms of Nitrogen	1998b
Coyne, et al.	Nitrous Oxide Loss from Poultry Manure-Amended Soil after Rain	1995
Cseh, et al.	Investigation on Biogas versus Yeast SCP Production from Pig Manure	1988
Cumby, T.R.	Expert Systems and Modeling to Tackle Farm Wastes	1994
Cure, W.W. and R. McCulloch	Nitrogen Emissions in North Carolina	1999a
Cure, W.W., J. Southerland, R. Wooten	Nitrogen Emissions in North Carolina	1999b
Cure, W.	Estimating Ammonia Emissions in North Carolina	2000
Curtis, S., J. Drummond, D. Grunloh, P. B. Lynch, A. Jensen	Relative and Qualitative Aspects of Aerial Bacteria and Dust in Swine Houses	1975a
Curtis, S., J. Drummond, K. Kelley, D. Grunloh, V. Meares, H. Norton, A. Jensen	Diurnal and Annual Fluctuations of Aerial Bacterial and Dust Levels in Enclosed Swine Houses	1975b
Daniel and Edwards	Effect of Surface-Applied Poultry Waste Source on Infiltration and Runoff	1992
Day, Hansen, Anderson	Gases and Odors in Confinement Swine Buildings	1963
de Graaf, et al.	Differential effects of ammonium and nitrate on three heartland species	1998
DeLuca & DeLuca	Composting for Feedlot Manure Management and Soil Quality	1997
Demmers, T.G.M., V.R. Phillips, L.S. Short, L.R. Burgess, R.P. Hoxey, C.M. Wathes	Validation of Ventilation Rate Measurement Methods and the Ammonia Emission from Naturally Ventilated Dairy and Beef Buildings in the United Kingdom	2001
den Brok, G.M.	Nitrogen Balance in the case of Slurry Separation on the Farm	1993
Dennis, R. and R. Mathur	Nitrogen Deposition Airsheds for East Coast Watersheds: Development for Oxidized Nitrogen and Preliminary Estimate for Reduced Nitrogen	1999
Derikx, Aarnink	Reduction of Ammonia Emission from Slurry by Application of Liquid Top Layer	1993
Derikx, et al.	Effect of pH on the behaviour of Volatile compounds in organic Manures during dry-matter determination	1994

Appendix B.

Complete List of References Reviewed (Continued)

Author(s)	Title	Year
Dewes, T., L. Schmitt, U. Valentin, E. Ahrens	Nitrogen Losses during the Storage of Liquid Livestock Manure	1989
Dewes, T.	Effect of pH, Temperature, Amount of Litter and Storage Density on Ammonia Emissions from Stable Manure	1996
Dewes, T.	Nitrogen Losses from Manure Heaps	1995
Dewes, T.	Ammonia emissions during the initial phase of microbial degradation of solid and liquid cattle manure	1999
DiMarco, O. N., M. S. Aello	Energy Cost of Cattle Walking on the Level and on a Gradient	1998
Döhler, H.	Laboratory and Field Experiments for Estimating Ammonia Losses from Pig and Cattle Slurry Following Application	1991
Donaldson, Christensen, Garlich, and McMurtry	Exposure to Excessive Carbon Dioxide: Risk Factor for Early Poult Mortality	1995
Dourmand, et al.	Effect of Growth Potential and Dietary Protein Input on Growth Performance, Carcass Characteristics and Nitrogen Output in Growing-finishing Farms	1993
du Toit, A. J.	Quantification of Odour Problems Associated with Liquid and Solid Feedlot and Poultry Wastes	1987
Easter, et al.	Use of Biotechnology and Feed Additives	1993
Eghball, et al.	Nutrient, Carbon, and Mass Loading during Composting of Beef Cattle Feedlot Manure	1997
Eismann, et al.	Effect of free phosphine on anaerobic digestion	1997
Elzing, Monteny	Modeling and Experimental Determination of Ammonia Emissions Rates from a Scale Model Dairy Cow House.	1997
European Environmental Agency	European Environmental Agency Emissions Inventory Guidebook for Agriculture	1999
Fallowfield, et al.	The Treatment of Livestock Slurry by Aeration and Algae	1994
Ferm et al.	Field Investigation of Methods to Measure Ammonia Volatilization	
Fernandes, L.	Effect of Temperature on the Performance of an SBR Treating Liquid Swine-Manure	1994
Fischer, Whalen	Denitrification in Soil Fertilized with Liquid Lagoonal Swine Effluent	1999
Fisher, Oppenheimer	Atmospheric Nitrogen Deposition and the Chesapeake Bay Estuary	1991
Fowler et al.	The Mass Budge of Atmospheric Ammonia in Woodland within 1 km of Livestock Buildings	1998
Frangmeier, et al.	Effects of Atmospheric Ammonia on Vegetation- A Review	1994
Fulhage, C. D.	Gaseous Emissions from Manure Management Systems	1998
Gagnon, Simard	Nitrogen and Phosphorus release from on-farm and industrial composts	1999
Gan, et al.	Acceleration of 1,3-Dichloropropene Degradation by Organic Amendments and Potential Application for Emissions Reduction	1998
Gates, Taraba, Liberty	Precision Nutrition and Litter Volatilization Dynamics	
Ghaly, Ben-Hassan	Continuous Production of Biogas from Dairy Manure Using an Innovative No-Mix Reactor	1989

Appendix B.

Complete List of References Reviewed (Continued)

Author(s)	Title	Year
Gonzalez, et al.	Slurry Composting Options	1989
Gordillo, Cabrera	Mineralizable Nitrogen in Broiler Litter: I. Effect of Selected Litter Chemical Characteristics	1997
Grelinger, M.	Improved Emission Factors for Cattle Feedlots	1997
Grelinger, M. and A. Page	Air Pollution Emission Factors for Swine Facilities	1999
Groenestein, C.M. and H.G. Van Faassen	Volatilization of ammonia, nitrous oxide and nitric oxide in deep-litter systems for fattening pigs	1996
Groot, Koelliker, Miner	Desorption of Ammonia from Anaerobic Lagoons	1971
Groot Koerkamp, P.W.G., J.H.M. Metz, G.H. Uenk, V.R. Phillips, M.R. Holden, R.W. Sneath, J.L. Short, R.P. White, J. Hartung, J. Seedorf, M Schröder, K.H. Linkert, S. Pederson, H. Takai, J.O. Johnsen, C.M. Wathes	Concentrations and Emissions of Ammonia in Livestock Buildings in Northern Europe	1998a
Groot, Koerkamp, Elzing	Degradation of Nitrogenous compounents in and volatilization of ammonia from litter in aviary housing systems for laying hens	1995
Groot Koerkamp, P.W.G., L. Speelman, J.H.M. Metz	Litter Composition and Ammonia Emission in Aviary Houses for Laying Hens	1998b
Groot Koerkamp, P.W.G.	Review on Emissions of Ammonia from Housing Systems for Laying Hens in Relation to Sources, Processes, Building Design, and Manure Handling	1994
Groot Koerkamp, P.W.G., and R. Bleijenberg	Effect of type of aviary manure and litter handling on the emission kinetics of ammonia from layer houses.	1998c
Grub, W., C.A. Rollo, J.R. Howes	Dust and Air Filtration in Animal Shelters	1965
Guarino, et al.	Dust Concentration and Mortality Distribution in an Enclosed Laying House	1999
Gupta, G., R. Sandhu, J. Harter-Dennis, A. Khan	Concentration and Size Distribution of Airborne Particles in a Broiler House	1988
Gustafsson, von Wachenfelt	Ammonia Extraction by Ventilation of Losse-housing Systems for Laying Hens	2000
Gustavsson, J.	Swedish measures to reduce ammonia emissions	1998

Appendix B.

Complete List of References Reviewed (Continued)

Author(s)	Title	Year
Hammond, Fedler, Junk	Identification of Dust-borne Odors in Swine Confinement Facilities	1979
Hammond, Fedler, Smith	Analysis of Particle-Borne Swine House Odors	1981
Hammond, E. G., C. Heppner, R. Smith	Odors of Swine Waste Lagoons	1988
Hammond, Segars, Gould	Land Application of Livestock and Poultry Manure	1994
Hammond, Smith	Survey of Some Molecularly Dispersed Odorous Constituents in Swine-House Air	1981
Hansen, et al.	Improving Thermophilic Anaerobic Digestion of Swine Manure	1999
Hansen, et al.	Anaerobic digestion of swine Manure: Inhibition by ammonia	1998
Hansen, Keener, Hoitink	Poultry Manure Composting: Design Guidelines for Ammonia	1989
Haque and Vandepopuliere	Composting Cage Layer Manure with Poultry Litter	1994
Harper, L. and R. Sharpe	Ammonia Emissions from Swine Waste Lagoons in the Southeastern U.S. Coastal Plains	1998
Harrington, et al.	Ecological Impacts of Different Forms of Nitrogen on Estuarine Phytoplankton Communities	1998
Harris, D. B. and E. Thompson	Evaluation of Ammonia Emissions From Swine Operations in North Carolina	1998
Harssema, H.	Field Measurements of Odourous Air Pollutions with Panels	1991
Hartung, J.	Dust in Livestock Buildings as a Carrier of Odors	1985
Hartung, J.	Tentative Calculations of Gaseous Emissions from Pig Houses by Way of the Exhaust Air	1988
Hartung, J.	Influence of Housing and Livestock on Ammonia Release from Buildings	1991
Hartung, J.	Ammonium in Rainwater Collected Around a Farm and in a Suburban Area	1988
Hartung, J. and V. R. Phillips	Control of gaseous emissions from Livestock Buildings and Manure Stores	1994
Hashimoto, et al.	Methane Production from Animal Wastes	
Heber, A.	Effect of Lagoon Aeration on Odor Emissions from a Swine Grow-Finish Facility	1997
Heber and Ni	Odor Emissions from a Swine Finishing Facility with a Surface-Aerated Lagoon	1999
Heber, A., M. Stroik, J. Faubion, L. Willard	Size Distribution and Identification of Aerial Dust Particles in Swine Finishing Buildings	1988
Heinrichs, Oldenburg	Effect of Protein Feeding on Gaseous Ammonia Emissions and Slurry Loading with Nitrogen in Fattening Pigs	1993
Henry, Dourmand	Feeding Strategy for Minimizing Nitrogen Output in Pigs	1993
Heber, A., D. Jones, A. Sutton	Methods and Practices to Reduce Odor from Swine Facilities	1999
Heber,A., D. Jones and A. Sutton	Indoor Air Quality: Controlling Ammonia Gas in Swine Buildings	
Hickox, W. and J. Denton	Air Toxics Hot Spots Program Risk Assessment Guidelines Part I: The Determination of Acute Reference Exposure Levels for Airborne Toxicants	1999
Hinz, T., S. Linke	A Comprehensive Experimental Study of Aerial Pollutants in and Emissions from Livestock Buildings. Part 1	1998a

Appendix B.

Complete List of References Reviewed (Continued)

Author(s)	Title	Year
Hinz, T., S. Linke	A Comprehensive Experimental Study of Aerial Pollutants in and Emissions from Livestock Buildings. Part 2	1998b
Hobbs, et al.	Assessment of Odours from Livestock Wastes by a Photoinoization Detector, an electronic nose, olfactometry, and gas chromatography-mass spectrometry	1995
Hoeksma, P., N. Verdoes, G.J. Monteny	Two Options for Manure Treatment to Reduce Ammonia Emission from Pig Housing	1993
Hoff, Bundy	Comparison of Contaminant Dispersion Modeling Approaches for Swine Housing	1996
Holland, et al.	Contemporary and Pre-Industrial Global Reactive Nitrogen Budgets	1999
Hornig, et al.	Slurry Covers to Reduce Ammonia Emissions and odour Nuisance	1999
Hsu, Lo	Chemical and spectroscopic analysis of organic matter transformations during composting of pig manure	1999
Huijsmans, de Mol	A model for Ammonia Volatilization after Surface Application and Subsequent Incorporation of Manure on Arable Land	1999
Huisman, et al.	Reduction of N Pollution by Decrease of the Excretion of Endogenous N in Pigs	1993
Hutchinson, G.L., A.R. Mosier, C.E. Andre	Ammonia and Amine Emissions from a Large Cattle Feedlot	1982
Huysman, et al.	Effect of Manuring Practices and Increased Copper Concentrations on Soil Microbial Poplations	1993
Ihnat, Fernandes	Trace Element characterization of composted poultry manure	1996
Ikeguchi, A. , M. Kamo	Mass transfer of moisture and ammonia from manure and manure litter mixture in free-stall housing	1996
Ikeguchi, Kamo	Mass Transfer of Moisture and Ammonia from Manure and Manure Litter Mixture in free-stall Housing	1997
Inbar, et al.	composting of Agricultural Wastes for their Use as Container media: Simulation of the Composting Process	1988
Jacobson, L.	Stakeholders Feedlot Air Emission Data Collection Project: Final Report, 12/30/99	1999
Jacobson, L.	Odor and Gas Emissions from Animal Manure Storage Units and Buildings	1999
Jarvis, Hatch, Lockyer	Ammonia fluxes from Grazed Grassland: Annual Losses from Cattle Production Systems and Thier Relation to Nitrogen Inputs	1989
Jarvis, S.C.	Grazed Pastures as Sources of Ammonia	1991
Jeppsson, K-H.	Volatilization of Ammonia in Deep-Litter Systems with Different Bedding Materials for Young Cattle	1999
Jungbluth, T., G. Brose, E. Hartung	Ammonia and Greenhouse Gas Emissions from Dairy Barns	1997
Jungersen and Ahring	Anaerobic Digestion of Liquefied Cow Manure Pretreated by Catalytic Liquefaction	1994
Kaharabata, Schuepp	Estimating Methane Emissions from Dairy Cattle Housed in a Barn and Feedlot Using an Atmospheric Tracer	2000
Kaharabata, Schuepp	Methane Emissions from Aboveground Open Manure Slurry Tanks	1998
Kilburn, K.H.	Evaluating Health Effects from Exposure to Hydrogen Sulfide: Central Nervous System Dysfunction	1999
Kilburn, Warshaw	Hydrogen Sulfide and Reduced Sulfur Gases Adversely Affect Neurophysiological Functions	1995
Kingery, et al.	Potential Environmental effects of long-term Land Application of Broiler Litter	1992

Appendix B.

Complete List of References Reviewed (Continued)

Author(s)	Title	Year
Kingery, et al.	Impact of Long-Term Land Application of Broiler Litter on Environmentally Related Soil Properties	1994
Kirchmann, Lundvall	Treatment of solid animal manures: Identification of low NH3 emission practices	1998
Kirchmann, Witter	Ammonia volatilization During Aerobic and Anaerobic Manure Decomposition	1989
Klarenbeek, J. V., M. A. Bruins	Ammonia Emissions After Land Spreading of Animal Slurries	1991
Klarenbeek, J.V., Bruins, M.A.	Ammonia Emissions from Livestock Buildings and Slurry Spreading	1988
Klasink, A., G. Steffens, H.-H. Kowalewsky	Odor and Ammonia Emissions from Grassland and Arable Land	1991
Koerkamp, Speelman, Metz	Litter Composition and Ammonia Emission in Aviary Houses for Laying Hens: Part II, Modelling the Evaporation of Water	1999
Koon, et al.	Changes in Physical and Chemical Characteristics of Poultry Litter due to Rotary Tilling	1994
Koon, et al.	Physical and Chemical Characteristics of Pine Shavings Poultry Litter	1992
Kosinska, Miskiewicz	Degradation of organic substances by deulfovibrio desulfuricans in liquid manure from industrial pig farming	1997
Kreuser, Machmuller	Reduction of gaseous Nitrogen Emission from Pig Manure by Increasing the Level of bacterially Fermentable Substrates in the Ration	1993
Krieger, et al.	Experiments with a Feed Additive to Reduce Ammonia Emissions from Pig Fattening Housing - Preliminary Results	1993
Kroodsma, W., R. Scholtens, J. Huis in ‘t Veld	Ammonia Emission from Poultry Housing Systems	1988
Kruse, et al.	Validity and Uncertainty in the Calculation of an Emission Inventory for Ammonia Arising from Agriculture in Great Britain	1989
Kumar, et al.	Effects of Urea Rates, Farmyard Manure, CaCO3, Salinity and Alkalinity Levels on Urea Hydrolysis and Nitrification in Soils	1988
Kuroda, K., T. Osada, M. Yonaga, A. Kanematu, T. Nitta, S. Mouri, T. Kojima	Emissions of Malodorous Compounds and Greenhouse Gases from Composting Swine Feces	1996
Kurvits, Marta	Agricultural NH3 and Nox Emissions in Canada	1998
Kushwaha, J.E. M.M. Abubakar, G.B. Ayoola	Effect of Chemical Fertilizer and Animal Wastes Application on Environmental Life Support Using the Delphi technique	1999
Latimier, Dourmand	Effect of Three Protein Feeding Strategies, for Growing-finishing Pigs, on Growth Performance and Nitrogen Output in the Slurry and in the Air	1993
Lau, et al.	Aeration Experiments for Swine Waste Composting	1992
Ledoux, et al.	Substitution of Phytase for Inorganic Phosphorus for Turkey Hens	1995
Lee, et al.	Dietary Manipulation to Reduce Nitrogen Excretion by Pigs and its Effect on Performance	1993
Lessard, et al.	Nitrous Oxide Fluxes from Manure-Amended Soil under Maize	1996

Appendix B.

Complete List of References Reviewed (Continued)

Author(s)	Title	Year
Li, Changsheng, Vijay Narayanan, Robert Harriss	Model estimates of nitrous oxide emissions from agricultural lands in the United States	1996
Liao, Bundy	Quantification of Ventilation on Distribution of Gaseous Pollutants Emitted from Stored Swine Manure	1985
Liao, C.	Use of Residence Time Distribution for Evaluation of Gaseous Pollutant Volatilization from Stored Swine Manure	1997
Liao, et al.	Removal of nitrogen from swine manure wastewaters by ammonia stripping	1995
Liebert, F.	Possibilities an Limitations for a Higher Efficiency of N Utilization in Growing Pigs	1993
Likens, et al.	Long-term Effects of Acid Rain: Response of Recovery of a Forest Ecosystem	1996
Liu, Bundy, and Hoff	Odor concentration and emission rate from a swine facility	1994
Liu, et al.	A Study of the Air Flow and Odor Emission Rate from a Simplified Open Manure Storage Tank	1995
Lockyer, D. R. and B. F. Pain	Ammonia Emissions from Cattle, Pig and Poultry Wastes applied to Pasture	1988
Logsdon, G.	Ammonia Troubles at Egg Factories	1989
Lolivier, et al.	Global Air Emission Inventories for Anthropogenic Sources of NOx, NH3, and N2O in 1990	1990
Mackie, R., P. Stroot, V. Varel	Biochemical Identification and Biological Origin of Key Odor Components in Livestock Waste	1998
Maghirang, et al.	Dust Concentrations and Particle Size Distribution in an Enclosed Swine Nursery	1997
Mahimairaja, et al.	Losses and Transformation of Nitrogen during composting of poultry manure with different amendments: an incubation experiment	1994
Makarov, Kiseleva	Acidificatin an Nutrient Imbalance in Forest Soils Subjected to Nitrogen Deposition	1995
Malegryd, Johan	Technical Measures to Reduce Ammonia Losses after Spreadsing of Animal Manure	1998
Mallik, et al.	Batch Digester Studies on Biogas Production from Cannabis Sativa, Water Hyacinth and Crop Wastes Mixed with Dung and Poultry Litter	1990
Mannebeck, Oldenburg	Comparison of the Effects of Different Systems on Ammonia Emissions	1991
Marchaim, Klinger	Ecological Aspects of Waste Control in Slaughterhouses	1988
Martin, J.	A Comparison of the Performance of Three Swine Waste Stabilization Systems	2000
Martins, Dewes	Loss of Nitrogenous Compounds during Composting of Animal Wastes	1992
Masse, Droste	Comprehensive Model of anaerobic digestion of swine manure slurry in a sequencing batch reactor	1999
Masters, B.K.	Management of Dairy Waste: A Low Cost Treatment System Using Phosphorus-Adsorbing Materials	1993
Matilla, P.K.	Ammonia volatilization from cattle slurry applied to grassland as affected by slurry treatment and application technique. First Year Results	1998
McCaskey, Little	Composting Sweetens Smell of Swine Manure	1994
McCollum, Gillen	Grazing Management Affects Nutrient Intake by Steers Grazing Tallgrass Prairie.	1998
McCrabb, G.J. R.A. Hunter	Prediction of Methane Emissions from Beef Cattle in Tropical Production Systems	1999
McCulloch, R., G. Few, G.C. Murray, V.P. Aneja	Analysis of Ammonia, Ammonium aerosols, and Acid Gases in the Atmosphere at a Commercial Hog Farm in Eastern NC, USA.	1998

Appendix B.

Complete List of References Reviewed (Continued)

Author(s)	Title	Year
McCulloch, Murray	Summary of Atmospheric Nitrogen Studies in North Carolina	2000
McCulloch, R.	An Observation-Based Gaussian Dispersion Model for Determining Ammonia emissions from a Commercial Hog Farm.	1999
McLeod, et al.	Enhancement of Nitrogen Deposition to Forest Trees Exposed to Sulfur Dioxide	1990
Meisinger, J., C. Schomburg, P. Zara, R. Thompson	Ammonia Emissions from Field Applications of Poultry Litter	
Mendez, DiMarco, Corva	Energy Expenditure of Cattle Walking on a Flat Terrain	1996
Merkel, Hazen, Miner	Identification of Gases in a Confinement Swine Building Atmosphere	1969
Milan, et al.	Deep Bed Filtration of Anaerobic Cattle Manure Effluents with Natural Zeolite	1999
Miner, Hazen	Ammonia and Amines: Components of Swine-Building Odor	1969
Miner, Stroh	Controlling Feedlot Surface Odor Emission Rates by Application of Commerical Products	1976
Minnesota Pollution Control Agency	Feedlot Air Quality Stakeholders Report	1999
Misselbrook, T.H., B.F. Pain, D.M. Headon	Estimates of Ammonia Emission from Dairy Cow Collecting Yards	1998
Mitchell, Holt, Seo	Reducing Dust in a Caged Layer Room: An Electrostatic Space Charge System	2000
Mjalgeryd, Wetterberg	Physical properties of solid and liquid manures and their effects on the performance of spreading machines	1996
Moal, J. F., J. Martinez, F. Guiziou, C.-M. Coste	Ammonia Volatilization Following Surface Applied Pig and Cattle Slurry in France	1995
Mondini, et al.	Changes during processing in the organic matter of composted and air-dried poultry manure	1996
Monteny, G.J.	Reduction of Ammonia Emission from Dutch Agriculture	1994
Monteny, Schulte, Elzing, and Lamaker	A Conceptual Mechanistic Model for the Ammonia Emissions from Free Stall Cubical Dairy Cow Houses	1998
Moore, et al.	Poultry Manure management: environmentally sound options	1995a
Moore, P.A., T.C. Daniel, D.R. Edwards, D.M. Miller	Effect of Chemical Amendments on Ammonia Volatilization from Poultry Litter	1995b
Morse, et al.	Production and Characteristics of Manure from Lactating Dairy Cows in Florida	1994
Mroz, et al.	Preliminary Studies on Excretory Patterns of Nitrogen and Anaerobic Deterioration of Faecal Protein from Pigs Fed Various Carbohydrates	1993
Nathan, Malzer	Dynamics of Ammonia Volatilization from Turkey Manure and Urea Applied to Soil	1994
NCDENR	Status Report on Emissions and Deposition of Atmospheric Nitrogen Compounds from Animal Production in North Carolina	1999

Appendix B.

Complete List of References Reviewed (Continued)

Author(s)	Title	Year
Ni, J., A.J. Heber, C.A. Diehl, T.T. Lim	Ammonia, Hydrogen Sulphide and Carbon Dioxide Release from Pig Manure in Under-floor Deep Pits	2000
Ni, Heber, Lim, Duggirala, Haymore, Diehl, Sutton	Hydrogen Sulfide Emissions from a Mechanically-Ventilated Swine Building During Warm Weather	1998
Ni, J.	Mechanistic Models of Amonia release from Liquid Manure: A Review	1999
Nicholson, R.J.	Systems of Storage and Disposal of Livestock Wastes	1994
Nicolai, R.E., J. Johnson, R.L. Mensch	Evaluation of Commercial Manure Additives to Control Odor from Swine Barns	1998
Nihlgard, B.	The Ammonium Hypothesis: An Additional Explanation to the Forest Dieback in Europe.	1985
Noll, Janne, Halvorson, Clanton	Market Turkey Performance, Air Quality, and Energy Consumption Affected by Partial Slotted Flooring	1997
Nordstedt	Testing of Broiler Litter and its Effect on Land Application	1993
Noue, et al.	Biotreatment of Swine Manure by intensive Lagooning during winter	1994
O'Dell, et al.	Surface application of liquid swine manure: chemical variability	1995
Oenema, Velthof, Yamulki, Jarvis	Nitrous Oxide Emissions from Grazed Grasslands	1997
O'Halloran, I.P.	Ammonia Volatilization from Liquid Hog Manure: Influence of Aeration and Trapping Systems	1993
Oldenburg	Ammonia Emissions from Various Pig Housing Systems	
O'Neill, D. H., V. R. Phillips	A Review of the Control of Odour nuisance from Livestock Buildings: Part 3, Properties of the Odorous Substances which have been identified in Livestock Wastes or in the Air Around them	1992
O'Neill, Phillips	A Review of the Control of Odour Nuisance from Livestock Buildings: Part 1, Influence of the Techniques for Managing Waste Within the Building	1991
Oomen, G.J.M	Mixed Farming Systems as a Way towards a More Efficient use of Nitrogen in European Union Agriculture	1998
Oosthoek, J., W. Kroodsma, P. Hoeksma	Ammonia Emissions from Diary and Pig Housing Systems	1991
Oudendag, Luesink	The Manure Model: manure, minerals (N, P and K), ammonia emission, heavy metals and the use of fertilizer in Dutch agriculture	1998
Paerl, et al.	Rainfall Stimulation of Primary Production in Western Atlantic Ocean waters: Roles of Different Nitrogen Sources and Co-limiting Nutrients.	1999
Paerl, et al.	The Role of Atmospheric N Deposition in Coastal Eutrophication: Current Issues and Perspectives.	2000
Paerl, H.W.	Emerging Role of Atmospheric Nitrogen Deposition in Coastal Eutrophication: Biogeochemical and Trophic Perspectives	1993
Paerl, H.W.	Coastal Eutrophication in Relation to Atmospheric Nitrogen Deposition: Current Perspectives	1995
Paerl, H.W.	Coastal Eutrophication and Harmful Algal Blooms: Importance of Atmospheric Deposition an Groundwater as "New" Nitrogen and other Nutrient Sources	1997
Paerl, H.W.	Cultural Eutrophication of Shallow Coastal Waters: Coupling Changing Anthropogenic Nutrient Inputs to Regional Management Approaches	1999

Appendix B.

Complete List of References Reviewed (Continued)

Author(s)	Title	Year
Paerl, H.W.	Stimulation of Phytoplankton Production in Coastal Waters by Natural Rainfall Inputs: Nutritional and Trophic Implications	1990
Paerl, H.W.	Is There a Link Between Atmospheric Nitrogen Deposition and Eutrophication in Coastal Waters?	1993
Paerl, H.W.	Isotopic Characterization of Atmospheric Nitrogen Inputs as Sources of Enhanced Primary Production in Coastal Atlantic Ocean Waters.	1994
Paerl, Whitall	Anthropogenically-derived Atmospheric Nitrogen Deposition, Marine Eutrophication and Harmful Algal Bloom Expansion: Is There a Link?	1999
Pain, B. F., V. R. Phillips, C. Clarkson, J. V. Klarenbeek	Loss of Nitrogen through Ammonia Volatilization during and Following the Application of Pig or Cattle Slurry to Grassland	1989
Pain, B. F., T. Misselbrook, C. Clarkson, Y. Rees	Odour and Ammonia Emissions Following the Spreading of Anaerobically-Digested Pig Slurry on Grassland	1990
Pain, et al.	A New Inventory for Ammonia Emissions from U.K. Agriculture	1998
Pain, et al.	Odour Emission Arising from Application of Livestock Slurries on Land: Measurements Following Spreading using a Micrometeorological Technique and Olfactometry	1991a
Pain, B. F., and T. Misselbrook	Relationships Between Odour and Ammonia Emission During and Following the Application of Slurries to Land	1991b
Pain, B. F., Y. Rees, D. Lockyer	Odour and Ammonia Emission Following the Application of Pig or Cattle Slurry to Land	1988
Parnell, Lesiker, Sweeten, Lacey	Determination of an Emission Factor for Cattle Feedyards by Applying Dispersion Modeling.	1994
Patni, Jui	Nitrogen Concentration Variability in Dairy-Cattle Slurry Stored in Farm Tanks	1991
Patni, Pidgeon	Emission of Atmospheric Nitrogen Compounds form Farm Animals in Canada	1999
Patterson, Lorenz	Manure Nutrient Production from Commercial White Leghorn Pullets	1997
Patterson, Lorenz	Manure Nutrient Production from Commercial White Leghorn Hens	1996
Patterson, P.H. E.S. Lorenz, and W.D. Weaver, Jr.	Litter Production and Nutrients from Commercial Broiler Chickens	1998
Payne, et al.	Availability and Form of Copper in Three Soils following Eight Annual Applications of Copper-enriched Swine Manure	1988
Pedersen, S., M. Nonnenmann, R. Rautiainen, T.G.M. Demmers, T. Banhazi, M. Lyngbye	Dust in Pig Buildings	2000
Peierls, et al.	Assessing the Flux and Bioavailability of Atmospheric Organic Nitrogen to North Carolina Coastal Ecosystems.	1999
Peters, Reddell	Ammonia volatilization and nitrogen transformations in soild used for beef manure disposal.	1976
Petersen, et al.	Nitrogen and Organic matter losses during storage of cattle and pig manure	1997
Petersen, S.O.	Nitrous Oxide Emissions from Manure and Inorganic Fertilizers Applied to Spring Barley	1999
Petersen, S.O.	Influence of liquid cattle Manure on Reduction Processes in Soil	1993

Appendix B.

Complete List of References Reviewed (Continued)

Author(s)	Title	Year
Pfeiffer, et al.	The Influence of Various Pig Housing Systems and Dietary Protein Levels on the Amount of Ammonia Emissions in the Case of Fattening Pigs	1993
Phillips, V.R., S.J. Bishop, J.S. Price, S. You	Summer Emissions of ammonia from a slurry-based, UK, Dairy House	1998a
Phillips, et al.	An assessment of ways to abate ammonia emissions from UK livestock buildings and waste stores. Part 1: ranking exercise	1999
Phillips, Holden, Sneath, et al.	The Development of Robust Methods for Measuring Concentrations and Emission	1998b
Phillips, Lee, Sholtens, Garland, Sneath	A Review of Methods for Measuring Emission Rates of Ammonia from Livestock Buildings and Slurry or Manure Stores, Part 2: monitor flux rates, concentrations and airflow rates	2001
Phillips, V.R., B. Pain, J.V. Klarenbeek	Factors Influencing the Odour and Ammonia Emissions During and After the Land Spreading of Animal Slurries	1991
Phillips, Scholtens, Lee, Garland, Sneath	A Review of Methods for Measuring Emission Rates of Ammonia from Livestock Buildings and Slurry or Manure Stores, Part 1: Assessment of Basic Approaches	2000
Pitcairn, et al.	The Relationship Between Nitrogen Deposition, Species Composition and Foliar Nitrogen concentrations in Woodland Flora in the Vicinity of Livestock Farms.	1998
Pitts, Tobin, Weidenboerner, Patterson, Lorenz	In-House Composting to Reduce Larval House Fly, Musca Domestica L. Populations	1998
Powers, Montoya, Van Horn, Nordstedt, Bucklin	Separation of Manure Solids from Simulated Flushed Manures by Screening or Sedimentation.	1995
Qi, R., H. Manbeck, R. Maghirang	Dust Net Generation Rate in a Poultry Layer House	1992
Ra, et al.	Control of a Swine Manure Treatment process using a specific feature of oxidation reduction potential	1999
Ritter, Chirnside, Scarborough	Nitrogen Movement in Poultry Houses and Under Stockpiled Manure	1994
Robarge	An Assessment of Atmospheric Ammonia Concentrations and Ammonia/Ammonium Deposition in Sampson Co., NC	2000
Robarge, Cure, Bode	Quantification of Atmospheric Nitrogen Deposition in Eastern North Carolina Using Throughfall and Bulk Deposition Collectors	1999a
Robarge, McCulloch, Cure	Atmospheric Concentrations of Ammonia and Ammonium Aerosols in Sampson County, North Carolina	1999b
Robinson, Sharpley	Release of Nitrogen and Phosphorus from Poultry Litter	1995
Rochette, Bochove, Prevost, Angers, Cote, Bertrand	Soil Carbon and Nitrogen Dynamics Following Application of Pig Slurry for the 19th Consecutive Year II. Nitrous Oxide fluxes and Mineral Nitrogen	2000
Roelofs, Houdijk	Ecological Impacts of Ammonia	1991
Roelofs, J.G.M.	Impact of Acidification and Eutrophication on Macrophyte Communities in Soft Waters in the Netherlands.	1983

Appendix B.

Complete List of References Reviewed (Continued)

Author(s)	Title	Year
Rudek	Atmospheric Nitrogen Deposition and Ecosystem Health in North Carolina: A Public Perspective	1997
Rulkens, W.H.	Recovery of Valuable Nitrogen Compounds from Agricultural Liquid Wastes: Potential Possibilities, Bottlenecks and Future Technological Challenges.	1998
Russel, K. M. et al.	Sources of Nitrogen in Wet Deposition to the Chesapeake Bay Region	1998
Safley, Westermann	Performance of a Low Temperature Lagoon Digester	1992
Safley, Westermann	Low-Temperature Digestion of Dairy and Swine Manure	1994
Sawyer, Hoeft	Greenhouse Evaluation of Simulated Injected Liquid Beef Manure	1990
Schafer, J.	Sampling, Characterization and Analysis of Malodours.	1977
Schatzchen, Kuhl	The Nitrogen Flow and Ammonia Emissions in a Pig Facility and its Share in the N-Load to the Agroecosystem	1993
Schiffman, et al.	The Effect of Environmental Odors Emanating from Commercial Swine Operations on the Mood of Nearby Residents	1995
Schirz, S.	Practical Application of Bioscrubbing Technique to Reduce Odor and Ammonia	1991
Scholtens, Demmers	Biofilters and Air Scrubbers in the Netherlands	1991
Scholtens, et al.	Control of Ammonia Emission with Biofilters and Bioscrubbers	1988
Schulte, D.D.	An Integrated Review of Nitrogen Management for Pig Manure in the U.S.	1993
Schulze, et al.	Critical Loads for Nitrogen Deposition on Forest Ecosystems	1989
Scoboda, Jones	Waste Management for Hog Farms	1999
	Seasonal Variation in Methane Emission from Stored Slurry and Solid Manures	1994
Secrest, C.	Hydrogen Sulfide from Lagoons and Barns	2000a
Secrest, C.	Particulate Matter from Finishing Facilities	2000b
Secrest, C.	Field Measurement of Air Pollutants Near Swine Confined Animal feeding Operations using UV DOAS and FTIR	
Sharpe, R., L. Harper	Ammonia and Nitrous Oxide Emissions from Sprinkler Irrigation Applications of Swine Effluent	1996
Shaw, et al.	Emission Factors for Grain Receiving an Feed Loading Operations feed Mills	1997
Shusterman, D.	Critical Review: The Health Significance of Environmental Odor Pollution	1992
Simmons, Lott	Reduction of Poultry Ventilation Fan Output due to shutters	1997
Sims, J.T. and D.C. Wolf	Poultry Waste Management: Agricultural and Environmental Issues	1994
Skewes, Harmon	Ammonia Quick Test and Ammonia Dosimeter Tubes for Determining Ammonia Levels in Broiler Facilities	1995
Sloan, D.R. and R.H. Harms	Effect of Diet on Feces Composition and the Implications on Environmental Quality	1995
Smith, Britton, Enis, Barnes, Lusby	Mineral Levels of Broiler House Litter and Forages and Soils Fertilized with Litter	1993
Smith, D. P. Spanel, J.B. Jones	Analysis of volatile emissions from porcine faeces and urine using selected ion flow tube mass spectrometry.	2000
Smith, Watts	Determination of Odour Emission Rates from Cattle Feedlots: Part 1, A Review	1994a
Smith, Watts	Determination of Odour Emission Rates from Cattle Feedlots: Part 2, Evaluation of Two Wind Tunnels of Different Size	1994b

Appendix B.

Complete List of References Reviewed (Continued)

Author(s)	Title	Year
Snyman, L.D.	Influence of Age and Formalin Treatment on the Chemical Composition and In Vitro Dry Matter Digestibility of Manure Collected from Steers Fed on a High-concentrate Diet	1988
Sobel, A.T.	Olfactory Measurement of Animal Manure Odor	1972
Sommer, S.G. and H.B. Møller	Emission of greenhouse gases during composting of deep litter from pig production - effect of straw content	2000
Sommer, Christensen	Effect of Dry Matter Content on Ammonia Loss from Surface Applied Cattle Slurry	1991
Sommer, S.G.	Ammonia Volatilization From Farm Tanks Containing Anaerobically Digested Animal Slurry	1997
Sommer, Thomsen	Loss of Nitrogen from Pig Slurry due to Ammonia Volatilization and Nitrate Leaching	1993
Sommerfeldt, et al.	Long-term Annual Manure Applications Increase Soil Organic Matter and Nitrogen, and Decrease Carbon to Nitrogen Ratio	1988
Spolestra, S.F.	Simple phenols and indoles in anaerobically stored piggery wastes.	1977
Spolestra, S.F.	Volatile fatty acids in anaerobically stored piggery wastes.	1979
Spolestra, S.F.	Origin of objectionable odorous components in piggery wastes and the possibility of applying indicator components for studying odor development	1980
Stevens, R.J. Laughlin, Frost	Effect of acidification with sulfuric acid on the volatilization of ammonia from cow and pig slurries.	1989
Stroud, Phillips	A Preliminary Assessment of Machines for Surface Spreading of Sludges and Slurries with Minimum Odor	1988
Subak, Susan	Full CycleEmissions from Extensive and Intensive Beef Production in Europe	1997
Sutton, M. A. et al.	Dispersion, Deposition and Impacts of Atmospheric Ammonia: Quantifying Local Budgets and Spatial Variability	1998a
Sutton, M. A. et al.	Introduction- Atmospheric Ammonia: Emission, Deposition and Environmental Impacts	1998b
Sutton, M. A. et al.	Assessment of the Magnitude of Ammonia emissions in the U.K.	1995
Sutton, A., J. Patterson, D. Kelly, D. Jones, A Heber, K. Kephart, R. Mumma and E. Bogus	Swine Diets to reduce ammonia and odor emissions	1996
Svennerstedt, B.	Drainage Properties and Ammonia Emissions in Slatted Floor Systems for Animal Buildings	1999
Svensson, Ferm	Mass Transfer Coefficient and Equilibrium Concentration as Key Factors in a New Approach to Estimate Ammonia Emission from Livestock Manure	1993
Svensson, L.	Ammonia Volatilization Following Application of Livestock Manure to Arable Land	1994
Sweeten, J. M.	Odor Intensities at Cattle Feedlots in Nuisance Litigation	1993
Sweeten, J. M.	Separation Distances for Swine Odor Control in Relation to Manure Nutrient Balances	1998
Sweeten, J. M.	Cattle Feedlot Waste Management Practices For Water and Air Pollution Control	
Sweeten, J. M., R. Childers, J. Cochran, R. Bowler	Odor Control from Poultry Manure Composting Plant using a Soil Filter	1991
Sweeten, et al.	Particle Size Distribution of Cattle Feedlot Dust Emission	1998

Appendix B.

Complete List of References Reviewed (Continued)

Author(s)	Title	Year
Sweeten, J. M.	Detecting and Reducing Ammonia Emissions from Dairies and Cattle Feedlots	1999
Sweeten, Parnell	Particle Size Distribution of Cattle Feedlot Dust Emissions	1989
Sweeten, J., D. Reddell, A. McFarland	Field Measurement of Ambient Odors with a Butanol Olfactometer	1983
Takai, H., S. Pedersen, J. Johnson, J.H. M. Metz, P. W. G. Groot Koerkamp, G. Uenk, V. Phillips, M. Holden, R. Sneath, J. Short, R. White, J. Hartung, J. Seedorf, M. Schröder, K. Linkert, C. M. Wathes	Concentrations and Emissions of Airborne Dust in Livestock Buildings in Northern Europe	1998
Tamminga, S.	Gaseous Pollutants by Farm Animal Enterprises.	1992
ten Have, et al.	Nitrification and Denitrification in an activated-sludge system for supernatant from settled sow manure with molasses as an extra carbon source	1994
ten Have, P.J.W.	Nitrogen and the Industrial Processing of Pig Manure	1993
Termeer, Warman	Use of Mineral Amendments to Reduce Ammonia Losses from Dairy-Cattle and chicken-manure slurries	1993
Thelosen, J.G.M., B.P. Heitlager, J.A.M. Voermans	Nitrogen Balances of Two Deep Litter Systems for Finishing Pigs	1993
Thu, K.	A Control Study of the Physical and Mental Health of Residents Living near a Large-Scale Swine Operation	1996
Timmons, Gtes, Bottcher, Carter, Brake, Wineland	TIV Algorithms for Poultry Environmental Control	1994
Tiquia, Tam	Elimination of Phytotoxicity during co-composting of spent pig manure sawdust litter and pig sludge	1998
Trachtenberg, Ogg	Potential for Reducing Nitrogen Pollution through Improved Agronomic Practices	1994
Tucker, Watts	Waste Minimization in Cattle Feedlots by Ration Modification	1993
Turzo, P.E.	Improved Nitrogen Fixation by Acidification and Dehydration of Slurry	1988
Minnesota Environmental Quality Board	Generic Environmental Impact Statement on Animal Agriculture: A Summary of the Literature Related to Air Quality and Odor	1999
USDA	Air Quality Research & Technology Transfer Programs for Concentrated Animal Feeding Operations	2000
USEPA	Development and Selection of Ammonia Emission Factors: Final Report	1994
USEPA-OREAED, MDNR	Premium Standard Farms Whitetail Concentrated Animal Feeding Operation Air Monitoring Report	2000

Appendix B.

Complete List of References Reviewed (Continued)

Author(s)	Title	Year
USEPA	The Benefits and Costs of the Clean Water Act: Appendix E, Eutrophication of Estuaries; Acidic and Nitrogen Deposition	1999a
USEPA	The Benefits and Costs of the Clean Water Act: Chapter 7: Ecological and Other Welfare Effects	1999b
Uthe, D.J.	On Farm Odor/Environmental Assistance Program	1999
Valli, L., S. Piccinini, G. Bonazzi	Ammonia Emission from Two Poultry Manure Drying Systems	1991
van Amstel, Swart	Methane and nitrous oxide emissions: an introduction	1994
van der Eerden, et al.	Risk of Damage to Crops in the Direct Neighborhood of Ammonia Sources	1998
Van der Hoek, K.W.	Estimating Ammonia Emission Factors in Europe: Summary of the Work of the UNECE Ammonia Expert Panel.	1998
van der Peet-Schwering, et al.	Optimization of the Feeding Strategy to minimize the N-excretion by using the Dutch Technical Pig Feeding Model	1993
van Eerdt, Fong	The Monitoring of Nitrogen Surpluses from Agriculture	1998
Van Horn, H. H.	Factors affecting manure quantity, quality and use	1998
Van Horn, H. H., A. Wilkie, W. Powers, R. Nordstedt	Components of Dairy Manure Management Systems	1993
Van Kessel, et al.	Storage and Handling Can Alter the Mineralization Characteristics of Manure	1999
van't Klooster, Heitlager	Determination of Minimum Ventilation Rate in Pig Houses with Natural Ventilation based on Carbon Dioxide Balance	1994
Varel, Miller	Effect of Antimicrobial agents on Livestock Waste Emissions	2000
Various	Workshop on Atmospheric Nitrogen Compounds II (proceedings from an international workshop sponsored by NC DENR, NC DHHS, MARMA, WRRI, NCSU, and USEPA)	1999
Various	Air Pollution from Agricultural Operations	2000
Vassilakis, Lindley	Cold Weather Performance of Two, Counter-Flow Parallel Plate, Air-to-Air Heat Exchangers in Swine Housing	1998
Vervoort, et al.	Field-Scale Nitrogen and Phosphorus Losses from Hayfields Receiving Fresh and Composted Broiler Litter	1998
Vincini, et al.	Use of Alkalkine Fly Ash as an amendment for swine manure	1994
Vitousek, et al.	Human Alteration of the Global Nitrogen Cycle: Sources and Consequences	1997
Vlassak, et al.	Ammonia Emission and Control After Land Spreading Livestock Waste	1991
Vuorinen, Saharinen	Effects of Process Conditions of composting Efficiency and Nitrogen Immobilization during composting of Manure in a drum composting system	1998
Waldroup and Hellwig	Methionnine and Total Sulfur Amino Acid Requirements Influenced by Stage of Production	1995
Walker, J. T., V. Aneja, D. Dickey	Atmospheric transport and wet deposition of ammonium in North Carolina	1999
Walker, J., D., Nelson, V. Aneja	Trends in Ammonium Concentration in Precipitation an Atmospheric Ammonia Emissions at a Coastal Plain Site in North Carolina, USA.	2000
Walker, J. T.	Source-Receptor Modeling of Wet Ammonium Deposition in North Carolina	1999
Walker, J. T., V. Aneja, D. Dickey	Atmospheric Transport and Wet Deposition of Ammonium in North Carolina	2000

Appendix B.

Complete List of References Reviewed (Continued)

Author(s)	Title	Year
Wang, et al.	Addition of different sources and levels of amino acids and sugars to broiler litter before deep-stacking	1995
Wase, Thayanithy	Biogas Production	1994
Wathes, C. M.	Aerial emissions from poultry production	1998
Seedorf, J., J. Hartung, M. Schröder, K. Linkert, V. Phillips, M. Holden, R. Sneath, J. Short, R. White, S. Pedersen, H. Takai, J. Johnsen, J. H. M. Metz, P. W. G. Groot Koerkamp, G. H. Uenk, C. M. Wathes	Concentrations and Emissions of Airborne Endotoxins and Microorganisms in Livestock Buildings in Northern Europe: Overview of a Multinational Project.	1998a
Wathes, C.M, V. Phillips, M. Holden, R. Sneath, J. Short, R. White, J. Hartung, J. Seedorf, M Schröder, K. Linkert, S. Pedersen, H. Takai, J. Johnsen, P. W. G. Groot Koerkamp, G. Uenk, J. H. M. Metz, T. Hinz, V. Caspary, S. Linke	Emissions of Aerial Pollutants in Livestock Buildings in Northern Europe: Overview of a Multinational Project.	1998b
Watts, et al.	Feedlot Odor Emissions Following Heavy Rainfall	1994
Weiss, Underwood	Hay Preservatives	
Westenbarger, D.A., David Leston	Livestock and Poultry Waste - Control Costs	1995
Westerman, et al.	Available Nitrogen in Broiler and Turkey Litter	1988
Whalen, S. C., E. Fischer, D. Brown	Nitrous Oxide Emission from an Agricultural Field Fertilized with Liquid Lagoonal Swine Effluent	1999
Whalen, S.C.	Nitrous Oxide Emission from an Agricultural Soil Fertilized with Liquid Swine Waste or Constituents	2000
Whitall, D.R. et al.	Atmospheric Nitrogen Deposition to the Neuse River Basin: Annual Budget and Spatiotemporal Variability	1999
Whitall, Paerl	Atmospheric Nitrogen Input to the Neuse River Estuary Watershed, North Carolina	2000
Whung, Li, Fischer	Atmospheric Ammonia and Ammonium Concentrations and Estimated Flux over the Tampa Bay Area	1999

Appendix B.

Complete List of References Reviewed (Continued)

Author(s)	Title	Year
Wilkie, Ann	Reducing Dairy Manure Odor and Producing Energy	2000
Williams, A. G.	Dust and Odor Relationships in Broiler House Air	1989
Williams, A. G.	Indicators of Piggery Slurry Odor Offensiveness	1984
Williams, Evans	Storage of Piggery Slurry	1981
Willison, et al.	CH4 Oxidization in Soils Fertilized with Organic and Inorganic-N; Differential Effects	1995
Wing, S.	Environmental Injustice In North Carolina's Hog Industry	2000a
Wing, S.	Intensive Livestock Operations, Health, and Quality of Life among Eastern North Carolina Residents	2000b
Witter, E.	Use of CaCl2 to decrease ammonia volatilization after application of fresh and anaerobic chicken slurry to soil	1991
Wolak, F. J., J. Chastain, O. Carton	Advisory Aid for Reducing Pollution Potential in Swine Production	1996
Wu, Chang, Chen	An Investigation on the Total Amount of Released Polycyclic Aromatic Hydrocarbons in the Incinerative Process for Pigs	2000
Xu, Shaffer, Al-Kaisi	Simulating the Impact of Management Practices on Nitrous Oxide Emissions	1998
Xue, Chen	Surface Oxidation for Reducing Ammonia and Hydrogen Sulfide Emissions from Dairy Manure Storage	1999
Xue, S., S. Chen, R. Hermanson	Determining Ammonia and Hydrogen Sulfide Emissions from Dairy Manure Storage Facilities	1997
Xue, S.K., S. Chen, R.E. Hermanson	Measuring Ammonia and Hydrogen Sulfide emitted from Manure Storage Facilities	1998
Xue, S.K., S. Chen, R.E. Hermanson	Wheat Straw Cover for Reducing Ammonia and hydrogen sulfide emissions from dairy manure storage	1999
Yan, et al.	Prediction of methane energy output in dairy and beef cattle offered grass silage-based diets	2000
Yasuhara, A., K. Fuwa, M. Jimbu	Identification of odorous compounds in fresh and rotten swine manure.	1984
Yu, et al.	Odorous Compounds from Treated Pig Manure	1991
Zahn, J.A., J. Hartfield, Y. S. Do, A. DiSpirito, D. Laird, R. Pfeiffer	Characterization of Volatile Organic Emissions and Wastes from a Swine Production Facility	1997
Zeeman, G.	Methane production /emission in storages for animal manure	1994
Zeisig, H.D.	Experiences with the Use of Biofilters to Remove Odors from Piggeries and Hen Houses	1988
Zhang, Day	Anaerobic Decomposition of Swine Manure and Ammonia Generation in a Deep Pit	1996
Zhang, et al.	Anaerobic Treatment of Swine Waste by the Anaerobic Sequencing Batch Reactor	1996
Zhang, Gaakeer	An Inflatable Cover for a Concrete Manure Storage in a Swine Facility	1998
Zhang, Westerman	Soild-Liquid Separation of Animal Manure for Odor Control and Nutrient Management	1997
Zhang, Y.	Acute Respiratory Responses of Human Subjects to Air Quality in a Swine Building	1998

Appendix B.

Complete List of References Reviewed (Continued)

Author(s)	Title	Year
Zhu, et al.	Controlling Odor and Volatile Substances in Liquid Hog Manure by Amendment	1997
Zhu, et al.	Volatile Fatty Acids as Odor Indicators in Swine Manure- A Critical Review	1999
Zhu, J.	A Review of Microbiology in Swine Manure Odor Control	2000
Zhu, J., L. Jacobson, D. Schmidt, R. Nicolai	Daily Variations in Odor and Gas Emissions from Animal Facilities	2000
Zuidhoff, Reddes, Robinson, Riddell	Effect of Ventilation Rate and Stocking Density on turkey health and Performance	1993

APPENDIX C

SUMMARY SHEETS FOR REFERENCES WHERE DATA WERE EXTRACTED

Table of Contents

Author	Page
Andersson, 1998	C-3
Aneja, et al., 2000	C-7
Bouwman, et al., 1997.	C-10
Cure, et al., 1999	C-13
Demmers, et al., 2001	C-16
European Environment Agency, 1999	C-19
Grelinger, 1997	C-22
Grelinger and Page, 1999	C-25
Groot Koerkamp, et al., 1998.	C-29
Grub, et al., 1965	C-32
Harper and Sharpe, 1998	C-35
Hartung and Phillips, 1993	C-38
Hoeksma, et al.	C-41
Hutchinson, et al., 1982	C-45
Jacobson et al., 1999.	C-48
Jacobson, et al. (University of Minnesota), 1999	C-51
Kroodsma, et al., 1988	C-54
Martin, 2000.	C-57
Misselbrook, et al., 1998	C-60
Ni, et al., 2000	C-63
North Carolina DENR, 1999	C-66

Table of Contents (Continued)

Author **Page**

Oosthoek, et al., 1991 . . . . . C-69

Pedersen, et al., 2000 . . . . . C-71

Secrest, 2000 . . . . . C-74

Secrest, 2000 . . . . . C-78

Takai, et al., 1998 . . . . . C-81

Tamminga, 1992 . . . . . C-84

USDA, 2000 . . . . . C-87

Valli, et al., 1991 . . . . . C-90

Van der Hoek, 1998. . . . . C-93

USEPA, 1994 . . . . . C-95

Witter, 1991 . . . . . C-97

Zhu, et al., 2000 . . . . . C-100

AFO Project Data Summary Sheet

1. Data Source ID: *375* **Reviewer Initials:** *DG*

2. Data Source (i.e., book title, journal title, proceedings title, volume, issue, page #):

Nutrient Cycling in Agroecosystems, 51:73-79, 1998

3. Article Title:

Reducing ammonia emissions by cooling of manure in manure culverts

4. Author:

M. Andersson

5. Date of report/article:

1998

6. Location of study (city, State, region):

southern Sweden

7. Animal types discussed: Beef Dairy Veal Swine Poultry-- broiler, layer, turkey Other (describe)

Swine

8. What pollutants are discussed:

ammonia

9. Is there any information related to controls or mitigation of air emissions?

Yes, the article deals with reducing ammonia emissions be reducing the temperature of the manure. Percent decreases from the control groups are given, however, the article states that the full potential of the cooling on ammonia emissions could not be measured since low ambient temperatures also kept the control group of pig pens at low temperatures.

10. Did the data source contain useful air information (emission factors or enough data to develop emission factors)? If "no", indicate why was it not useful (e.g., vague, no pollutant information) and a very brief summary of what it did have (e.g., "contained only seasonal flux measurements of pollutant concentrations in the surrounding air around a swine house, but no parameter data to develop emission factors). If the answer is "no", stop the review with this question. If the answer is "yes", continue with the remaining questions.

Yes

For each animal type discussed in the article answer the following questions (i.e., use a separate summary sheet for each animal type)

11. What animal type is addressed in the remainder of this summary sheet?

Swine

12. Number/Size/Age of animals present

34 fattening pigs

13. What general CAFO operations are covered by the data source?: (Feeding, Confinement, Waste Conveyance, Storage, Treatment, or End Use):

housing area (includes feeding and confinement)

14. What specific CAFO operation is discussed? (e.g., types of confinement area, etc., see below for detailed classification):

covered pig house

15. What are the physical parameters of the specific CAFO operation? (Volume, surface area, ventilation rate, etc)

The pig house (7.1 m wide X 12.0 m long) contained 8 pens (each with an area of 5.25 sq. m), with a portion of the floor slatted for dung removal. The manure culvert under the floor was 0.4 m deep. Both the pig house and the manure culvert were ventilated.

16. What pollutants are discussed?:

ammonia

17. Are emissions data available? If yes, are they emission factors or total emissions?:

Yes, emission factors

18. Are activity factors provided? What are the units? (e.g., tons of manure, 1000 head of cattle, tons of beef production, etc.):

Yes, the number of pigs and the surface area of the pig pens are provided.

19. What test methods/measurement activities were used to gather emissions information?

Include description of whether measurement activities were made at one point in time or over a series of days/hours:

Ammonia concentrations determined using an infrared analyzer (Miran 203); air flow measurements determined using a hot wire anemometer.

20. What units are emissions data in?:

mg ammonia/m^2-h

21. Provide pollutant specific emission data for the animal/CAFO combination (e.g., total emissions, emission factors, emissions per activity unit, etc.):

see sum375sy.xls

22. What were the climatic conditions/season when tests were conducted? (e.g., temperature, relative humidity, wind speed, time of day, month, etc):

None specified

23. What information is known about the feeds?:

None

24. Additional manure information, including speciation and type of manure handled (liquid: < 3% total solids, slurry: 3-8% total solids, solid: >8% total solids)

None

25. Additional information:

None

26. Additional references of interest in the data source:

None (potential references are already in house)

27. Data concerns or caveats:

The article states that the full potential of the cooling on ammonia emissions could not be measured since low ambient temperatures also kept the control group of pig pens at low temperatures.

<u>Some specific CAFO operations</u>

- **Confinement facility includes uncovered feedlot, free-stall barn, etc. It also includes**

type of ventilation such as natural or mechanical, and method of manure collection such as deep pit or pull plug pit or flushing.

- **Waste Conveyance systems are usually open or closed**
- **Treatment systems include anaerobic lagoon, anaerobic digester, aerobic treatment, composting, etc.**

AFO Project Data Summary Sheet

1. Data Source ID: *11* Reviewer Initials: *JMH*

2. Data Source (i.e., book title, journal title, proceedings title, volume, issue, page #):
Journal of Geophysical Research, Vol. 105, No.D9, pp. 11535-11545
3. Article Title:
Characterization of atmospheric ammonia emissions from swine waste storage and treatment lagoons
4. Author:
Viney P. Aneja, J. P. Chauhan, and J. T. Walker
5. Date of report/article:
May 16, 2000
6. Location of study (city, State, region):
NC
7. Animal types discussed: Beef Dairy Veal ***Swine*** Poultry-- broiler, layer, turkey
Other (describe)
8. What pollutants are discussed:
NH3
9. Is there any information related to controls or mitigation of air emissions?
No
10. Did the data source contain useful air information (emission factors or enough data to develop emission factors)? If "no", indicate why was it not useful (e.g., vague, no pollutant information) and a very brief summary of what it did have (e.g., "contained only seasonal flux measurements of pollutant concentrations in the surrounding air around a swine house, but no parameter data to develop emission factors). If the answer is "no", stop the review with this question. If the answer is "yes", continue with the remaining questions.
YES

For each animal type discussed in the article answer the following questions (i.e., use a separate summary sheet for each animal type)

11. What animal type is addressed in the remainder of this summary sheet?
Swine
12. Number/Size/Age of animals present
13 hog production houses (farrow-to-finish) containing approximately 10,000 animals. 1212 sows and boars (avg weight of ~181 kg each), 7480 finishers (~61 kg each), and ~ 1410 suckling pigs (~ 11 kg each).
13. What general CAFO operations are covered by the data source?: (Feeding, Confinement, Waste Conveyance, Storage, Treatment, or End Use): *Waste Treatment*

14. What specific CAFO operation is discussed? (e.g., types of confinement area, etc., see below for detailed classification): *Anaerobic lagoon*

15. What are the physical parameters of the specific CAFO operation? (Volume, surface area,

ventilation rate, etc) *~2.5 ha in size, maximum depth of ~4 m in middle*

16. What pollutants are discussed?: *NH3*

17. Are emissions data available? If yes, are they emission factors or total emissions?:
Emission factor
18. Are activity factors provided? What are the units? (e.g., tons of manure, 1000 head of cattle, tons of beef production, etc.): *Could probably use the animal population data given in the article as activity data.*
19. What test methods/measurement activities were used to gather emissions information? Include description of whether measurement activities were made at one point in time or over a series of days/hours: *Measurements taken using a dynamic chamber system. Unit floats upon the surface of the lagoon. Summer measurements taken from August 1-15, 1997. Fall and winter taken intermittently for 6 and 10 days, respectively. Spring measurements taken May 16-27, 1998.*

20. What units are emissions data in?:
NH3-N given in ug N/ m^2-min
21. Provide pollutant specific emission data for the animal/CAFO combination (e.g., total emissions, emission factors, emissions per activity unit, etc.): *See SUM11sy.xls*

22. What were the climatic conditions/season when tests were conducted? (e.g., temperature, relative humidity, wind speed, time of day, month, etc): *Testing performed during each of the four seasons. Some details given in #19 about specific dates.*

23. What information is known about the feeds?: *None*

24. Additional manure information, including speciation and type of manure handled (liquid: < 3% total solids, slurry: 3-8% total solids, solid: >8% total solids)
Lagoon temperature, pH, and TKN given
25. Additional information:
Gives flux values from other researchers' studies for comparison.
26. Additional references of interest in the data source:
Extensive reference list, may want to review further
27. Data concerns or caveats:
Not sure if test method compares to other studies' methods.

<u>Some specific CAFO operations</u>

- Confinement facility includes uncovered feedlot, free-stall barn, etc. It also includes type of ventilation such as natural or mechanical, and method of manure collection such as deep pit or pull plug pit or flushing.
- Waste Conveyance systems are usually open or closed
- Treatment systems include anaerobic lagoon, anaerobic digester, aerobic treatment, composting, etc.
- Waste storage units include closed tank, storage pond, open tank, storage shed, or open

stacking

- End use includes surface spreading which can be solid or liquid manure spreading or irrigation with application rates and concentrations

AFO Project Data Summary Sheet

1. Data Source ID: 122 Reviewer Initials: BH

2. Data Source (i.e., book title, journal title, proceedings title, volume, issue, page #): Global Biogeochemical Cycles, Vol 11, No. 4, Pages 561-587

3. Article Title: Bouwman, et. al.

4. Author: A Global High-Resolution Emission Inventory for Ammonia

5. Date of report/article: December 1997

6. Location of study (city, State, region): Global

7. Animal types discussed: Dairy cattle, nondairy cattle (young cattle, suckling cows, beef cattle), buffalo (4 subcategories), camels (4 subcategories), horses, sheep, goats, pigs (fattening pigs, sows, piglets and young sows), poultry (layers, broilers)

8. What pollutants are discussed: NH3

9. Is there any information related to controls or mitigation of air emissions? No

10. Did the data source contain useful air information (emission factors or enough data to develop emission factors)? If "no", indicate why was it not useful (e.g., vague, no pollutant information) and a very brief summary of what it did have (e.g., "contained only seasonal flux measurements of pollutant concentrations in the surrounding air around a swine house, but no parameter data to develop emission factors). If the answer is "no", stop the review with this question. If the answer is "yes", continue with the remaining questions. Yes.

For each animal type discussed in the article answer the following questions (i.e., use a separate summary sheet for each animal type)

11. What animal type is addressed in the remainder of this summary sheet? Dairy cattle

12. Number/Size/Age of animals present
Dairy Cattle, 500 kg LW, 15L milk/day

13. What general CAFO operations are covered by the data source?: (Feeding, Confinement, Waste Conveyance, Storage, Treatment, or End Use): Stable and Storage, and spreading

14. What specific CAFO operation is discussed? (e.g., types of confinement area, etc., see below for detailed classification): Stable and Storage, and spreading

15. What are the physical parameters of the specific CAFO operation? (Volume, surface area, ventilation rate, etc) ammonia volatilization rates, see table sum122xy.xls for values (both tables 1 and 2).

16. What pollutants are discussed?: ammonia

17. Are emissions data available? If yes, are they emission factors or total emissions?: Emission Factors

18. Are activity factors provided? What are the units? (e.g., tons of manure, 1000 head of cattle, tons of beef production, etc.): References Lerner et al. (1988) for domesticates animal populations, Bouman et al. (1995) for poultry population, and Food And Agriculture Organization (1991) for grid-based estimates (see question 26 for complete references)

19. What test methods/measurement activities were used to gather emissions information? Include description of whether measurement activities were made at one point in time or over a series of days/hours: Inventory was potential annual emissions.

20. What units are emissions data in?: Tg/yr; kg/head/year

21. Provide pollutant specific emission data for the animal/CAFO combination (e.g., total emissions, emission factors, emissions per activity unit, etc.): See table sum122xy.xls (both tables 1 and 2)

22. What were the climatic conditions/season when tests were conducted? (e.g., temperature, relative humidity, wind speed, time of day, month, etc): N/A

23. What information is known about the feeds?: Not specifically listed

24. Additional manure information, including speciation and type of manure handled (liquid: < 3% total solids, slurry: 3-8% total solids, solid: >8% total solids) None.

25. Additional information: None.

26. Additional references of interest in the data source:

Lerner, et al. Methane Emissions from Animals: A global high resolution database. *Global Biogeochemical Cycles*, 2, 139-156, 1988.

Bouman, et al. Uncertainties in the global source distribution of nitrous oxide, *J. Geophysical Res.*, 100, 2785-2800, 1995.

Food and Agriculture Organization (FAO), Agrostat PC in *Computerized Inf. Ser. 1/3, Land Use*, Food and Agriculture Oraganization of the UN, Rome, 1991.

27. Data concerns or caveats: Emission type was potential emissions, that is, no corrections were made for influence that ambient NH3 concentrations would have on the flux of ammonia to the atmosphere.

Some specific CAFO operations

- Confinement facility includes uncovered feedlot, free-stall barn, etc. It also includes type of ventilation such as natural or mechanical, and method of manure collection such as deep pit or pull plug pit or flushing.
- Waste Conveyance systems are usually open or closed
- Treatment systems include anaerobic lagoon, anaerobic digester, aerobic treatment, composting, etc.
- Waste storage units include closed tank, storage pond, open tank, storage shed, or open stacking
- End use includes surface spreading which can be solid or liquid manure spreading or irrigation with application rates and concentrations

AFO Project Data Summary Sheet

1. Data Source ID: 127 Reviewer Initials: BH

2. Data Source (i.e., book title, journal title, proceedings title, volume, issue, page #):
AWMA Conference 10/26-10/28/99.208

3. Article Title: Nitrogen Emissions in North Carolina

4. Author: Cure, McCulloch, and Robarge

5. Date of report/article: 10/28/99

6. Location of study (city, State, region): NC

7. Animal types discussed: Cattle, Swine, Poultry

8. What pollutants are discussed: Ammonia

9. Is there any information related to controls or mitigation of air emissions? No.

10. Did the data source contain useful air information (emission factors or enough data to develop emission factors)? If "no", indicate why was it not useful (e.g., vague, no pollutant information) and a very brief summary of what it did have (e.g., "contained only seasonal flux measurements of pollutant concentrations in the surrounding air around a swine house, but no parameter data to develop emission factors). If the answer is "no", stop the review with this question. If the answer is "yes", continue with the remaining questions. Yes.

For each animal type discussed in the article answer the following questions (i.e., use a separate summary sheet for each animal type) Swine

11. What animal type is addressed in the remainder of this summary sheet?

12. Number/Size/Age of animals present 135 lb

13. What general CAFO operations are covered by the data source?: (Feeding, Confinement, Waste Conveyance, Storage, Treatment, or End Use): Not Specified

14. What specific CAFO operation is discussed? (e.g., types of confinement area, etc., see below for detailed classification): Not Specified

15. What are the physical parameters of the specific CAFO operation? (Volume, surface area, ventilation rate, etc) Not Specified

16. What pollutants are discussed?: NH3

17. Are emissions data available? If yes, are they emission factors or total emissions?: Yes, emission factors

18. Are activity factors provided? What are the units? (e.g., tons of manure, 1000 head of cattle, tons of beef production, etc.): No, but is available through NCDA

19. What test methods/measurement activities were used to gather emissions information? Include description of whether measurement activities were made at one point in time or over a series of days/hours: Used published values from Battye, et. al, NCDA, NCSU, NRCS, and European Environmental Agency (EEA)

20. What units are emissions data in?: mass N/animal/year

21. Provide pollutant specific emission data for the animal/CAFO combination (e.g., total emissions, emission factors, emissions per activity unit, etc.):

The following data is duplicated in sum128sy.xls

	lbs-N/animal/year		kg-N/animal/year	
	Lagoon Loss		Lagoon Loss	
	9%	22%	9%	22%
N-Excreted	24.2	24.2	11.0	11.0
Losses in Houses - 15%	3.6	3.6	1.7	1.7
N Entering Lagoon	20.6	20.6	9.3	9.3
Losses from Lagoon - 9% or 22%	2.2	5.3	1.0	2.4
N Content of Lagoon Liquid Before Spraying	18.4	15.3	8.3	6.9
Losses During Spraying - 25%	4.6	3.8	2.1	1.7
N Content of Lagoon Liquid on Soil Surfaces	13.8	11.5	6.2	5.2
Volatilization from Soil Surface - 30%	4.1	3.5	1.9	1.6
N Remaining on Soil Surface	9.7	8.0	4.3	3.6
Total N Loss to Air	14.5	16.2	6.7	7.4
% Loss	60	67	60	67

22. What were the climatic conditions/season when tests were conducted? (e.g., temperature, relative humidity, wind speed, time of day, month, etc): Not Specified

23. What information is known about the feeds?: none.

24. Additional manure information, including speciation and type of manure handled (liquid: < 3% total solids, slurry: 3-8% total solids, solid: >8% total solids) none.

25. Additional information:

26. Additional references of interest in the data source:

Battye, et. al. *Development and Selection of Ammonia Emission Factors, Final Report.* August 1994. Prepared by EC/R for USEPA.

27. Data concerns or caveats:

Some specific CAFO operations

- Confinement facility includes uncovered feedlot, free-stall barn, etc. It also includes type of ventilation such as natural or mechanical, and method of manure collection such as deep pit or pull plug pit or flushing.
- Waste Conveyance systems are usually open or closed
- Treatment systems include anaerobic lagoon, anaerobic digester, aerobic treatment, composting, etc.
- Waste storage units include closed tank, storage pond, open tank, storage shed, or open stacking
- End use includes surface spreading which can be solid or liquid manure spreading or irrigation with application rates and concentrations

AFO Project Data Summary Sheet

1. Data Source ID: *493* Reviewer Initials: *JMH*

2. Data Source (i.e., book title, journal title, proceedings title, volume, issue, page #):
Journal of Agricultural Engineering Research (obtained through Silsoe Research Institute)
3. Article Title:
Validation fo Ventilation Rate Measurement Methods and the Ammonia Emission from Naturally Ventilated Dairy and Beef Buildings in the United Kingdom
4. Author:
Demmers, T. G. M., V. R. Phillips, L. S. Short, L. R. Burgess, R. P. Hoxey and C. M. Wathes
5. Date of report/article:
2001
6. Location of study (city, State, region):
United Kingdom
7. Animal types discussed: Beef **Dairy** Veal Swine Poultry-Broiler Layer Turkey

8. What pollutants are discussed:
Ammonia
9. Is there any information related to controls or mitigation of air emissions?
No
10. Did the data source contain useful air information (emission factors or enough data to develop emission factors)? If "no", indicate why was it not useful (e.g., vague, no pollutant information) and a very brief summary of what it did have (e.g., "contained only seasonal flux measurements of pollutant concentrations in the surrounding air around a swine house, but no parameter data to develop emission factors). If the answer is "no", stop the review with this question. If the answer is "yes", continue with the remaining questions.
Yes

For each animal type discussed in the article answer the following questions (i.e., use a separate summary sheet for each animal type):

11. What animal type is addressed in the remainder of this summary sheet?
Dairy
12. Number/Size/Age of animals present
90 dairy cows in scrape freestall barn
13. What general CAFO operations are covered by the data source?: (Feeding, Confinement, Waste Conveyance, Storage, Treatment, or End Use): *Confinement*

14. What specific CAFO operation is discussed? (e.g., types of confinement area, etc., see below for detailed classification): *freestall barn (scrape)*

15. What are the physical parameters of the specific CAFO operation? (Volume, surface area, ventilation rate, etc) *floor scraped every 2 hours, buildings naturally ventilated with space*

boarding on sides and a 'cranked crown' ventilator at the ridge.

16. What pollutants are discussed?: *ammonia*

17. Are emissions data available? If yes, are they emission factors or total emissions?:
Yes, emission factors
18. Are activity factors provided? What are the units? (e.g., tons of manure, 1000 head of cattle, tons of beef production, etc.): *Yes, per livestock unit per year (One livestock unit (LU) equals 500 kg live weight)*

19. What test methods/measurement activities were used to gather emissions information? Include description of whether measurement activities were made at one point in time or over a series of days/hours. Also, if possible, describe sample collection technique, sample analysis methods, and any QA/QC procedures performed (e.g. equipment blanks, trip blanks, etc.):
Emission test method used was the constant tracer, using carbon monoxide as the trace gas. Ten sampling points were located in the ventilation openings of the building. Ammonia concentration was measured using a chemiluminescent nitric oxide analyzer following stainless steel thermal converters. Measurements taken from February to May 1995. Technique was validated using known ammonia source.

20. What units are emissions data in?:
kg NH3/LU/yr
21. Provide pollutant specific emission data for the animal/CAFO combination (e.g., total emissions, emission factors, emissions per activity unit, etc.) NOTE: IT MAY BE MOST CONVENIENT TO CREATE A SPREADSHEET FOR THIS DATA. PLEASE INDICATE THE FILENAME IF A SEPARATE SPREADSHEET CONTAINS THE EMISSION FACTOR DATA FROM THIS REFERENCE:
8.9 kg NH3/LU/yr for freestall barns (scrape),
3.5 kg NH3/LU/yr for beef on straw (not mapable to any of the model farm operations, so not discussed further in this review).
22. What were the climatic conditions/season when tests were conducted? (e.g., temperature, relative humidity, wind speed, time of day, month, etc) Were data presented for different seasons?: *United Kingdom, February to May 1995.*

23. What information is known about the feeds?:
None
24. Additional manure information, including speciation and type of manure handled (liquid: < 3% total solids, slurry: 3-8% total solids, solid: >8% total solids)
None
25. Additional information:

26. Additional references of interest in the data source:

27. Data concerns or caveats:

Some specific CAFO operations

- Confinement facility includes uncovered feedlot, free-stall barn, etc. It also includes type of ventilation such as natural or mechanical, and method of manure collection such as deep pit or pull plug pit or flushing.
- Waste Conveyance systems are usually open or closed
- Treatment systems include anaerobic lagoon, anaerobic digester, aerobic treatment, composting, etc.
- Waste storage units include closed tank, storage pond, open tank, storage shed, or open stacking
- End use includes surface spreading which can be solid or liquid manure spreading or irrigation with application rates and concentrations

AFO Project Data Summary Sheet

1. Data Source ID: 384 Reviewer Initials: *JMM*

2. Data Source (i.e., book title, journal title, proceedings title, volume, issue, page #):

CORINAIR Emissions Inventory Guidebook for Agriculture

3. Article Title:

4. Author:

European Environment Agency

5. Date of report/article:

September 1, 1999

6. Location of study (city, State, region):

European countries

7. Animal types discussed: *Beef Dairy Swine Broiler Layer Turkey Other (horses, sheep, goats)*

8. What pollutants are discussed: *Ammonia, Nitrous oxide, non-methane VOCs*

9. Is there any information related to controls or mitigation of air emissions?

Yes. Controls are discussed for each pollutant, however % reductions are only given for ammonia.

10. Did the data source contain useful air information (emission factors or enough data to develop emission factors)? If "no", indicate why was it not useful (e.g., vague, no pollutant information) and a very brief summary of what it did have (e.g., "contained only seasonal flux measurements of pollutant concentrations in the surrounding air around a swine house, but no parameter data to develop emission factors). If the answer is "no", stop the review with this question. If the answer is "yes", continue with the remaining questions.

Yes. Contains emission factors for ammonia by animal type and general CAFO operation.

For each animal type discussed in the article answer the following questions (i.e., use a separate summary sheet for each animal type)

11. What animal type is addressed in the remainder of this summary sheet?

Beef cattle.
12. Number/Size/Age of animals present

Not specifically reported--definition includes beef cattle, young cattle, and suckling cows but not diary cows.

13. What general CAFO operations are covered by the data source?: (Feeding, Confinement, Waste Conveyance, Storage, Treatment, or End Use):

Animal housing, manure storage outside the building, and surface spreading of waste.

14. What specific CAFO operation is discussed? (e.g., types of confinement area, etc., see below for detailed classification):

No specific CAFO operation is discussed, except for defining end-use as "surface spreading of waste".

15. What are the physical parameters of the specific CAFO operation? (Volume, surface area, ventilation rate, etc)

None provided. The factors are animal based and are designed for a top-down approach to inventory development.

16. What pollutants are discussed?:

Ammonia, nitrous oxide, and non-methane VOCs.

17. Are emissions data available? If yes, are they emission factors or total emissions?:

Emission factors are provided for ammonia.

18. Are activity factors provided? What are the units? (e.g., tons of manure, 1000 head of cattle, tons of beef production, etc.):

Number of animals.

19. What test methods/measurement activities were used to gather emissions information? Include description of whether measurement activities were made at one point in time or over a series of days/hours:

Factors are based on a the results of literature review.

20. What units are emissions data in?:

Kilograms.

21. Provide pollutant specific emission data for the animal/CAFO combination (e.g., total emissions, emission factors, emissions per activity unit, etc.):

See companion spreadsheet "sum384by.xls" for list of ammonia emission factors.

22. What were the climatic conditions/season when tests were conducted? (e.g., temperature, relative humidity, wind speed, time of day, month, etc):

Based on annual averages; no specific conditions are described.

23. What information is known about the feeds?:

None provided.

24. Additional manure information, including speciation and type of manure handled (liquid: < 3% total solids, slurry: 3-8% total solids, solid: >8% total solids)

Beef cattle manure is assumed to be a slurry.

25. Additional information:

26. Additional references of interest in the data source:

27. Data concerns or caveats:

The emission factors were developed to represent European agricultural practices and may not be directly applicable to United States practices.

<u>Some specific CAFO operations</u>

- Confinement facility includes uncovered feedlot, free-stall barn, etc. It also includes type of ventilation such as natural or mechanical, and method of manure collection such as deep pit or pull plug pit or flushing.
- Waste Conveyance systems are usually open or closed
- Treatment systems include anaerobic lagoon, anaerobic digester, aerobic treatment, composting, etc.
- Waste storage units include closed tank, storage pond, open tank, storage shed, or open stacking
- End use includes surface spreading which can be solid or liquid manure spreading or irrigation with application rates and concentrations

AFO Project Data Summary Sheet

1. Data Source ID: *485* Reviewer Initials: *JMH*

2. Data Source (i.e., book title, journal title, proceedings title, volume, issue, page #):
Emission Inventory: Planning for the Future. Proceedings of a Specialty Conference, October 28-30, 1997 Research Triangle Park, NC. Volume 1.
3. Article Title:
Improved Emission Factors for Cattle Feedlots
4. Author:
Mary Ann Grelinger
5. Date of report/article:
1997
6. Location of study (city, State, region):
Various- Texas, California, Europe
7. Animal types discussed: **Beef** Dairy Veal Swine Poultry-Broiler Layer Turkey

8. What pollutants are discussed:
PM-10, ammonia
9. Is there any information related to controls or mitigation of air emissions?
No
10. Did the data source contain useful air information (emission factors or enough data to develop emission factors)? If "no", indicate why was it not useful (e.g., vague, no pollutant information) and a very brief summary of what it did have (e.g., "contained only seasonal flux measurements of pollutant concentrations in the surrounding air around a swine house, but no parameter data to develop emission factors). If the answer is "no", stop the review with this question. If the answer is "yes", continue with the remaining questions.
Yes.

For each animal type discussed in the article answer the following questions (i.e., use a separate summary sheet for each animal type):

11. What animal type is addressed in the remainder of this summary sheet?
Beef
12. Number/Size/Age of animals present
Although individual data for tests at each lot not given, the following lot sizes were included in the tests used to develop the emission factor: 42,000 hd, 45,000hd, 20-25,000 hd.
13. What general CAFO operations are covered by the data source?: (Feeding, Confinement, Waste Conveyance, Storage, Treatment, or End Use):
Confinement
14. What specific CAFO operation is discussed? (e.g., types of confinement area, etc., see below for detailed classification):
Drylot
15. What are the physical parameters of the specific CAFO operation? (Volume, surface area,

ventilation rate, etc)
Not given.
16. What pollutants are discussed?:
TSP, PM-10, ammonia

17. Are emissions data available? If yes, are they emission factors or total emissions?:
Yes, emission factors.
18. Are activity factors provided? What are the units? (e.g., tons of manure, 1000 head of cattle, tons of beef production, etc.): *per 1,000 hd cattle per day*

19. What test methods/measurement activities were used to gather emissions information? Include description of whether measurement activities were made at one point in time or over a series of days/hours. Also, if possible, describe sample collection technique, sample analysis methods, and any QA/QC procedures performed (e.g. equipment blanks, trip blanks, etc.): *For TSP/PM , studies used TSP Hi-Vol Sampler and a Sierra Andersen Model 321-A PM-10 inlet. Ammonia test methods not discussed, since data was compiled from another study.*

20. What units are emissions data in?:
lb/day/1000hd
21. Provide pollutant specific emission data for the animal/CAFO combination (e.g., total emissions, emission factors, emissions per activity unit, etc.) NOTE: IT MAY BE MOST CONVENIENT TO CREATE A SPREADSHEET FOR THIS DATA. PLEASE INDICATE THE FILENAME IF A SEPARATE SPREADSHEET CONTAINS THE EMISSION FACTOR DATA FROM THIS REFERENCE:
35-50 lb NH3 per day/1000hd,
280 lb TSP/day/1000hd, to obtain PM-10, multiply by 0.25.
22. What were the climatic conditions/season when tests were conducted? (e.g., temperature, relative humidity, wind speed, time of day, month, etc) Were data presented for different seasons?:
TSP: sampling conducted over a year period
Ammonia information not given.
23. What information is known about the feeds?:
None
24. Additional manure information, including speciation and type of manure handled (liquid: < 3% total solids, slurry: 3-8% total solids, solid: >8% total solids)
None
25. Additional information:

26. Additional references of interest in the data source:

27. Data concerns or caveats:
This report compiles data from other studies. May want to find original data, if possible, to provide additional information on testing methods and QA procedures.

<u>Some specific CAFO operations</u>
- Confinement facility includes uncovered feedlot, free-stall barn, etc. It also includes type

of ventilation such as natural or mechanical, and method of manure collection such as deep pit or pull plug pit or flushing.

- Waste Conveyance systems are usually open or closed
- Treatment systems include anaerobic lagoon, anaerobic digester, aerobic treatment, composting, etc.
- Waste storage units include closed tank, storage pond, open tank, storage shed, or open stacking
- End use includes surface spreading which can be solid or liquid manure spreading or irrigation with application rates and concentrations

AFO Project Data Summary Sheet

1. Data Source ID: 42 Reviewer Initials: RB

2. Data Source (i.e., book title, journal title, proceedings title, volume, issue, page #): *AWMA conference Oct 26-28, 1999.*

3. Article Title: *Air Pollutant Emission Factors for Swine Facilities*

4. Author: *Mary Ann Grelinger and Andrew Page*

5. Date of report/article: *Oct 28, 1999*

6. Location of study (city, State, region): *Central U.S.*

7. Animal types discussed: *Swine*

8. What pollutants are discussed: *Ammonia, benzene, p-cresol, phenol, carbon disulfide, PM, total HAPs*

9. Is there any information related to controls or mitigation of air emissions? *No*

10. Did the data source contain useful air information (emission factors or enough data to develop emission factors)? If "no", indicate why was it not useful (e.g., vague, no pollutant information) and a very brief summary of what it did have (e.g., "contained only seasonal flux measurements of pollutant concentrations in the surrounding air around a swine house, but no parameter data to develop emission factors). If the answer is "no", stop the review with this question. If the answer is "yes", continue with the remaining questions.

Yes - This article is a compilation of emission factors developed by others

---

For each animal type discussed in the article answer the following questions (i.e., use a separate summary sheet for each animal type)

11. What animal type is addressed in the remainder of this summary sheet? *Swine finishing operation*

12. Number/Size/Age of animals present *80,000 pigs raised from weanling pigs weighing 50 pounds to market size of 250 pounds, the average pig weights approximately 120 pounds.*

13. What general CAFO operations are covered by the data source?: (Feeding, Confinement, Waste Conveyance, Storage, Treatment, or End Use):*The emission factors are developed for all CAFO operations.*

14. What specific CAFO operation is discussed? (e.g., types of confinement area, etc., see below for detailed classification): *the farm includes 100 barns, where the animals are fed and raised, excrement is drained as liquid effluent to lagoons by frequent flushing of the barns with lagoon water. Nine anaerobic lagoons are include in this facility. The lagoon wastewater is applied to land using aerial spraying (traveling guns).*

15. What are the physical parameters of the specific CAFO operation? (Volume, surface area, ventilation rate, etc) *Nine anaerobic lagoons average 3.5 acres each of effluent surface area with an average waste depth of 20 feet. The lagoon wastewater is typically applied to land twice a year, with an annual volume of 5 million cubic feet of waste water pumped down an applied to the land using aerial spraying (traveling guns).*

16. What pollutants are discussed?: *Ammonia, benzene, p-cresol, phenol, carbon disulfide, PM, total HAPs*

17. Are emissions data available? If yes, are they emission factors or total emissions?: *Emission factors and total emissions*

18. Are activity factors provided? What are the units? (e.g., tons of manure, 1000 head of cattle, tons of beef production, etc.): *Most of the activity is based on the number of animals.*

19. What test methods/measurement activities were used to gather emissions information? Include description of whether measurement activities were made at one point in time or over a series of days/hours: *This article is a compilation of emission factors developed by others*, and does not include information about what test methods were used or

20. What units are emissions data in?: *It varies, most of them are in terms fattening pigs/yr.*

21. Provide pollutant specific emission data for the animal/CAFO combination (e.g., total emissions, emission factors, emissions per activity unit, etc.): *Emission factors are developed in a variety of terms, total emissions by CAFO operation, emission factors by CAFO operation per pig and some of the data are in terms of pig body weight. The emissions and factors are provided in the associated spreadsheet.*

22. What were the climatic conditions/season when tests were conducted? (e.g., temperature, relative humidity, wind speed, time of day, month, etc): *Not provided*

23. What information is known about the feeds?: *Ammonia emission factors are presented for different feed mixtures. Feed isn't considered for the other pollutants.*

24. Additional manure information, including speciation and type of manure handled (liquid: < 3% total solids, slurry: 3-8% total solids, solid: >8% total solids). *Very little is provided about the manure.*

25. Additional information: *The ammonia section includes assumptions about nitrogen uptake in*

pig during fattening.

26. Additional references of interest in the data source:

Battye, R., W, Battye, C. Overcash, S. Fudge. Development and Selection of Ammonia Emission Factors. Final Report by EC/R Inc for US EPA 1994.

Harper, Allen. Feeding Technologies to reduce excess Nutrients in Swine Waste. Proceedings of Meeting the Challenge of Environmental Management on Hog Farms. Second Annual Virginia Tech Swine Producers Seminary, Carson, VA, August 4, 1994.

Powers, Wendy, H.H. Van Horn. Whole-Farm Nutrient Budgeting: A nutritional Approach to Manure Management . Presented at the Manure Management in Harmony with the Environment and Society Conference sponsored by the soil and Water Conservation Society. Ames, IA February 10-12 1998.

Korngay, E.T. A.F. Harper. Environmental Nutrition: Nutrient Management Strategies to Reduce Nutrient Excretion of Swine. The Professional Animal Scientist 13:99-111.

Fulhage, Charles. Beyond Odors-Potential Impact of Emissions on Manure Management presented at the International Conference on Air Pollution from Agricultural Operations, Kansas City, MO February 7-9, 1996.

Gantzer, C.J. Emission of Odor Gases from Outdoor Hog Manure Basins, Presented at the Manure Management in Harmony with the Environment and Society Conference sponsored by the soil and Water Conservation Society. Ames, IA February 10-12 1998.

Sutton, A. J. Patterson, D. Kelly, D. Jones, A. Heber, K. Kephart, R. Mumma, E. Bogus. Odor control by biochemical and Microbial Transformation in the Pig and Manure Storage (II). NPPC research Investment Report, 1997.

Veum, T.L., D.M. Sievers. Reduction of Putrefactive Compounds in Swine Waste by Polyphenols. Research Investment Report for NPPC, 1997.

27. Data concerns or caveats:

The European Ammonia emission estimates/factors are about half the U.S. mass balance factors.

<u>Some specific CAFO operations</u>

- Confinement facility includes uncovered feedlot, free-stall barn, etc. It also includes type of ventilation such as natural or mechanical, and method of manure collection such as deep pit or pull plug pit or flushing.
- Waste Conveyance systems are usually open or closed
- Treatment systems include anaerobic lagoon, anaerobic digester, aerobic treatment, composting, etc.

- Waste storage units include closed tank, storage pond, open tank, storage shed, or open stacking
- End use includes surface spreading which can be solid or liquid manure spreading or irrigation with application rates and concentrations

AFO Project Data Summary Sheet

1. Data Source ID: *84* Reviewer Initials: *RB*

2. Data Source (i.e., book title, journal title, proceedings title, volume, issue, page #): *Journal of Agricultural Engineering Research* 70, 79-95.

3. Article Title: *Concentrations and Emissions of Ammonia in Livestock Buildings in Northern Europe.*

4. Author: *W.G. Groot Koerkamp, J.H. M. Metz, G.H. Uenk, V.R. Phillips, M.r. Holden, R.W. Sneath, J.L Short, R.P. white, J. Hartung, J. Seedorf, M. Schroder, K. H. Linkert, S. Pedersen, H.Takai, J.O. Johnsen, C.M. Wathes.*

5. Date of report/article: *1998*

6. Location of study (city, State, region): *England, the Netherlands, Denmark, and Germany*

7. Animal types discussed: *Swine, Cattle, and Poultry*

8. What pollutants are discussed: *Ammonia*

9. Is there any information related to controls or mitigation of air emissions? *No*

10. Did the data source contain useful air information (emission factors or enough data to develop emission factors)? If "no", indicate why was it not useful (e.g., vague, no pollutant information) and a very brief summary of what it did have (e.g., "contained only seasonal flux measurements of pollutant concentrations in the surrounding air around a swine house, but no parameter data to develop emission factors). If the answer is "no", stop the review with this question. If the answer is "yes", continue with the remaining questions.

Yes

For each animal type discussed in the article answer the following questions (i.e., use a separate summary sheet for each animal type)

11. What animal type is addressed in the remainder of this summary sheet? *Poultry - Laying Hens, Broilers.*

12. Number/Size/Age of animals present *Not much was said about the animals associated with the test data.*

13. What general CAFO operations are covered by the data source?: (Feeding, Confinement, Waste Conveyance, Storage, Treatment, or End Use): *Confinement*

14. What specific CAFO operation is discussed? (e.g., types of confinement area, etc., see below for detailed classification):*Ventilated animal houses* with slat floors and others with litter

15. What are the physical parameters of the specific CAFO operation? (Volume, surface area, ventilation rate, etc) *Concentration and ventilation were provided in the article.*

16. What pollutants are discussed?: *Ammonia*

17. Are emissions data available? If yes, are they emission factors or total emissions?: *Yes, as emission factors*

18. Are activity factors provided? What are the units? (e.g., tons of manure, 1000 head of cattle, tons of beef production, etc.): *Per animal and per 500 Kg live weight.*

19. What test methods/measurement activities were used to gather emissions information? Include description of whether measurement activities were made at one point in time or over a series of days/hours: *The ammonia analyser used was a combination of chemiluminescence NO analyser and a thermal NH_3 converter. The tests were performed over 24 hour periods.*

20. What units are emissions data in?: *mg/h per animal and mg/h per 500 kg of live weight.*

21. Provide pollutant specific emission data for the animal/CAFO combination (e.g., total emissions, emission factors, emissions per activity unit, etc.): *See associated spreadsheet.*

22. What were the climatic conditions/season when tests were conducted? (e.g., temperature, relative humidity, wind speed, time of day, month, etc):*Once in Winter and again in Summer, some summary temperature data were provided.*

23. What information is known about the feeds?: *No information was provided on feeds associated with the animals*

24. Additional manure information, including speciation and type of manure handled (liquid: < 3% total solids, slurry: 3-8% total solids, solid: >8% total solids) *No information was provided concerning the manure generated.*

25. Additional information:

Emission data is also provided in terms of heat production units.

26. Additional references of interest in the data source:

Nielsen V.C., Voorburg, J. H., L'Hermite P. Volatile emissions from Livestock farming and Sewage Operations. Proceedings opf a Workshop at Uppsala, 10-12 June 1987, London: Elsevier, 1987, 245pp.

Hartung J. Emission and Control of gases and odours substances from Animal Housing and Manure Stores. Zentrablatt Fur Hygiene und Umweltmedizin, 1992 , (192(5) 389-418.

Hartung J., Pillips V. R. Control of gaseous emissions from Livestock Buildings and Manure Stores. Journal of Agricultural Engineering Research, 1994, 57, 173-189.

Groenestein, C.M. Animal Waste Management and Emission of Ammonia from Livestock Housing Systems: Field Studies In: Proceedings Fourth International Symposium on Livestock Environment IV (Collins E; Boon C), Coventry, 6-9 July 1993, 1169-1175.

Carlile, F.S. Ammonia in Poultry houses: a Literature Review. World's Poultry Science Journal, 1984, 40 (2) 99-113.

Wachenfelt R. von. Air Contaminants in Poultry Production System, 1: Sweden. In : Proceedings of the 4th European Symposium on Poultry Welfare (Savoy C.J., Hughes, B.O.) Pp. 97-109 Edinburough: Universities Federation for Animal Science, 1993.

Groot Koerkamp P.W.G. Review on Emissions of Ammonia from Housing Systems for Laying Hens in Relation to Sources, Processes, Building Design and Manure Handling. Journal of Agricultural Engineering Research, 1994, 59, 73-87.

Bonazzi, G. Valli, L.; Piccinini, S. Controlling Ammonia Emissions from Poultry Manure Composting Plants. In Volatile Emissions from Livesstock Farming and Sewage Operations (Nielsen, V. C.; Voorburg, J. H.; L'Hermite, P.; eds) Proceedings of a Workshop, Uppsala, Sweden, 10-12 June, London: Elsevier, 1987. 183-195.

27. Data concerns or caveats: *The data should be used with realization that there are large variations between countries, between commercial houses and between seasons.*

<u>Some specific CAFO operations</u>

- Confinement facility includes uncovered feedlot, free-stall barn, etc. It also includes type of ventilation such as natural or mechanical, and method of manure collection such as deep pit or pull plug pit or flushing.
- Waste Conveyance systems are usually open or closed
- Treatment systems include anaerobic lagoon, anaerobic digester, aerobic treatment, composting, etc.
- Waste storage units include closed tank, storage pond, open tank, storage shed, or open stacking
- End use includes surface spreading which can be solid or liquid manure spreading or irrigation with application rates and concentrations

AFO Project Data Summary Sheet

1. Data Source ID: Reviewer Initials: *AAB*
31
2. Data Source (i.e., book title, journal title, proceedings title, volume, issue, page #):
Transactions of the ASAE (1965), 338
3. Article Title:
Dust Problems in Poultry Environments
4. Author:
W. Grub, C.A. Rollo, and J. R. Howes
5. Date of report/article:
1965
6. Location of study (city, State, region):
Alabama
7. Animal types discussed: Poultry-- layer and broiler

8. What pollutants are discussed:
dust
9. Is there any information related to controls or mitigation of air emissions?
No
10. Did the data source contain useful air information (emission factors or enough data to develop emission factors)? If "no", indicate why was it not useful (e.g., vague, no pollutant information) and a very brief summary of what it did have (e.g., "contained only seasonal flux measurements of pollutant concentrations in the surrounding air around a swine house, but no parameter data to develop emission factors). If the answer is "no", stop the review with this question. If the answer is "yes", continue with the remaining questions.
Yes

For each animal type discussed in the article answer the following questions (i.e., use a separate summary sheet for each animal type)

11. What animal type is addressed in the remainder of this summary sheet?
Poultry - Layers and broilers
12. Number/Size/Age of animals present
Layers - *44 laying hens, hens used were Single Comb H3W White Leghorn hens.*
Broilers - *80 broilers; broilers used were Vantress male cross No. 50 Arbor Acres female White Rock chicks.*

13. What general CAFO operations are covered by the data source?: (Feeding, Confinement, Waste Conveyance, Storage, Treatment, or End Use):
Confinement
14. What specific CAFO operation is discussed? (e.g., types of confinement area, etc., see below for detailed classification):

15. What are the physical parameters of the specific CAFO operation? (Volume, surface area, ventilation rate, etc)

Experiments to collect dust samples from laying hens in cages and from broilers on litter and in batteries were conducted using chambers which measured 8 ft by 10 ft with a height of 7 ft. Each chamber had a smooth white enamel interior surface that was covered by a polyethylene sheet. The chambers were controlled with individual environmental system without air exchange between chambers. The temperature was held constant at 60, 75, and 90 deg F. The relative humidity was maintained at 60% with a differential. The ventilation was held constant at 1cfm per bird (approx. 4.7 air changes per hour). The chambers were sealed to exclude light. Illumintation was provided 14 hours per day by a one 40-watt incandescent bulb. The air in the chamber was recirculated through a heat exhanger at an average rate of 270 cfm or 29 recirculations each hour. The average air velocity in the cage was 40 fpm.

Experiments to collect dust samples from laying hens on floor litter were conducted in two chambers that were 8 by 10 ft with a height of 8ft. The surfaces of the chambers were covered with smooth, galvanized sheet metal finished with a glossy white enamel. Individual chamber temperatures and air moisture were controlled by pre-conditioning the ventilation air. The air temperature was held constant at 80 deg.F. The relative humidity was measured at 40, 50, 60, and 70% . The chambers were sealed to exclude light. Illumination was provided 14 hours per day by one 40 watt incandescent bulb. Ventilation air was provided at 50 cfm (approx. 4.7 air changes per hour).

16. What pollutants are discussed?:

Dust

17. Are emissions data available? If yes, are they emission factors or total emissions?:

Yes - emission factors

18. Are activity factors provided? What are the units? (e.g., tons of manure, 1000 head of cattle, tons of beef production, etc.):

None

19. What test methods/measurement activities were used to gather emissions information? Include description of whether measurement activities were made at one point in time or over a series of days/hours:

Laying hens in cages and broilers on litter and in batteries: *the dust was collected on two-ply, type S filter paper manufactured by the American Air Filter Co. The filter was mounted 5ft above the floor at the intake duct of the heat exchanger. For the laying hens, the filter paper was changed every 72 to 96 hours. The filter paper for the broiler tests was changed every 12 to 24 hours.*

Laying hens on litter : *the dust was collected on two-ply, type S filter paper manufactured by American Air Filter Co.. The filter was mounted 4ft above the floor in an exhaust duct. The filter paper was changed every 1 to 2 hours.*

20. What units are emissions data in?:

mg of dust per bird per hour

21. Provide pollutant specific emission data for the animal/CAFO combination (e.g., total emissions, emission factors, emissions per activity unit, etc.):

see sum31py.xls

22. What were the climatic conditions/season when tests were conducted? (e.g., temperature, relative humidity, wind speed, time of day, month, etc):

Differed depending on the experiment - see sum31py.xls

23. What information is known about the feeds?:

No information provided

24. Additional manure information, including speciation and type of manure handled (liquid: < 3% total solids, slurry: 3-8% total solids, solid: >8% total solids)

No information provided

25. Additional information:

26. Additional references of interest in the data source:

27. Data concerns or caveats:

<u>Some specific CAFO operations</u>

- Confinement facility includes uncovered feedlot, free-stall barn, etc. It also includes type of ventilation such as natural or mechanical, and method of manure collection such as deep pit or pull plug pit or flushing.
- Waste Conveyance systems are usually open or closed
- Treatment systems include anaerobic lagoon, anaerobic digester, aerobic treatment, composting, etc.
- Waste storage units include closed tank, storage pond, open tank, storage shed, or open stacking
- End use includes surface spreading which can be solid or liquid manure spreading or irrigation with application rates and concentrations

AFO Project Data Summary Sheet

1. Data Source ID: *511* Reviewer Initials: *JMH*

2. Data Source (i.e., book title, journal title, proceedings title, volume, issue, page #):
Division of Air Quality, NCDENR report
3. Article Title:
Ammonia Emissions from Swine Waste Lagoons in the Southeastern U.S. Coastal Plains
4. Author:
Lowry Harper and Ron Sharpe
5. Date of report/article:
December, 1998
6. Location of study (city, State, region):
Coastal plains of North Carolina and Georgia
7. Animal types discussed: Beef Dairy Veal **Swine** Poultry-Broiler Layer Turkey

8. What pollutants are discussed:
Ammonia
9. Is there any information related to controls or mitigation of air emissions?
No
10. Did the data source contain useful air information (emission factors or enough data to develop emission factors)? If "no", indicate why was it not useful (e.g., vague, no pollutant information) and a very brief summary of what it did have (e.g., "contained only seasonal flux measurements of pollutant concentrations in the surrounding air around a swine house, but no parameter data to develop emission factors). If the answer is "no", stop the review with this question. If the answer is "yes", continue with the remaining questions.
Yes

For each animal type discussed in the article answer the following questions (i.e., use a separate summary sheet for each animal type):

11. What animal type is addressed in the remainder of this summary sheet?
Swine
12. Number/Size/Age of animals present
Number of animals not given. Farms are mixture of farrow-finish and farrow-wean
13. What general CAFO operations are covered by the data source?: (Feeding, Confinement, Waste Conveyance, Storage, Treatment, or End Use): *Anaerobic lagoons*

14. What specific CAFO operation is discussed? (e.g., types of confinement area, etc., see below for detailed classification):
Anaerobic lagoon
15. What are the physical parameters of the specific CAFO operation? (Volume, surface area, ventilation rate, etc) *lagoon areas of 2.7 and 2.4 ha, from flush and pull-plug houses respectively. Windspeed avg. between 98-1016 cm/sec; water temperature avg between 6.1-29.5*

deg C, ammonium concentration avg between 183-741 micrograms per gram, and pH avg range of 7.4-8.3.
16. What pollutants are discussed?:
Ammonia

17. Are emissions data available? If yes, are they emission factors or total emissions?:
Yes, emission factors.
18. Are activity factors provided? What are the units? (e.g., tons of manure, 1000 head of cattle, tons of beef production, etc.): *Yes, per animal per year.*

19. What test methods/measurement activities were used to gather emissions information? Include description of whether measurement activities were made at one point in time or over a series of days/hours. Also, if possible, describe sample collection technique, sample analysis methods, and any QA/QC procedures performed (e.g. equipment blanks, trip blanks, etc.):
Micrometeorological instrumentation placed on a barge in the middle of the lagoon so that a minimum fetch of 50:1 (upwind lagoon distance : measurement height) is achieved. Ammonia concentrations obtained by drawing air through gas washing bottles. Ammonium ion concentration then measured using colorimetry.

20. What units are emissions data in?:
kg NH3/animal/yr
21. Provide pollutant specific emission data for the animal/CAFO combination (e.g., total emissions, emission factors, emissions per activity unit, etc.) NOTE: IT MAY BE MOST CONVENIENT TO CREATE A SPREADSHEET FOR THIS DATA. PLEASE INDICATE THE FILENAME IF A SEPARATE SPREADSHEET CONTAINS THE EMISSION FACTOR DATA FROM THIS REFERENCE:
0.5 kg NH3/animal per year for GA farrow-finish (FF),
1.9 kg NH3/animal per year for GA FF four stage lagoons
0.8 kg NH3/animal per year for NC FF lagoon, and
1.2 kg NH3/animal per year for NC farrow-wean
22. What were the climatic conditions/season when tests were conducted? (e.g., temperature, relative humidity, wind speed, time of day, month, etc) Were data presented for different seasons?: *Measurements taken at different times and seasons to produce annual composite.*

23. What information is known about the feeds?:
None
24. Additional manure information, including speciation and type of manure handled (liquid: < 3% total solids, slurry: 3-8% total solids, solid: >8% total solids)
None
25. Additional information:

26. Additional references of interest in the data source:
Presents data from other studies (most have been accounted for in the literature review).
27. Data concerns or caveats:

Some specific CAFO operations

- Confinement facility includes uncovered feedlot, free-stall barn, etc. It also includes type of ventilation such as natural or mechanical, and method of manure collection such as deep pit or pull plug pit or flushing.

AFO Project Data Summary Sheet

1. Data Source ID: *203* Reviewer Initials: *tkm*

2. Data Source (i.e., book title, journal title, proceedings title, volume, issue, page #):
J. Agric. Engng Research, 1994, 57, 173-189

3. Article Title: *Reduction of Ammonia Emission from Dutch Agriculture: Technical Solutions*

4. Author: *J. Hartung; V.R. Phillips*

5. Date of report/article: *July 3, 1993*

6. Location of study (city, State, region): *former East and West Germany*

7. Animal types discussed: *(beef) cattle, swine, poultry, laying hens, other (horses, sheep)*

8. What pollutants are discussed: *NH3; CH4*

9. Is there any information related to controls or mitigation of air emissions? *yes; information shown on the effect of different feeding regimes on the N content of the feed and in the slurry of fattening pigs. Frequency of manure removal; manure drying; effects on NH3 emissions from additives to feed and slurry; manure flushing procedures; slurry storage unit covers; (tented roofs, corrugated sheets, floating plastic and plastic foam); Table 10 in this paper summarizes the efficiencies of different covers for controlling NH3 emissions from outdoor slurry storage tanks.*

10. Did the data source contain useful air information (emission factors or enough data to develop emission factors)? If "no", indicate why was it not useful (e.g., vague, no pollutant information) and a very brief summary of what it did have (e.g., "contained only seasonal flux measurements of pollutant concentrations in the surrounding air around a swine house, but no parameter data to develop emission factors). If the answer is "no", stop the review with this question. If the answer is "yes", continue with the remaining questions.
Yes; Contains NH3 emission factors as well as ambient concn. data.

For each animal type discussed in the article answer the following questions (i.e., use a separate summary sheet for each animal type)

11. What animal type is addressed in the remainder of this summary sheet? ***This information is the same for each animal type:*** *Cattle (beef); swine, laying hens and poultry*

12. Number/Size/Age of animals present. *Not defined*

13. What general CAFO operations are covered by the data source?: (Feeding, Confinement,

Waste Conveyance, Storage, Treatment, or End Use): *confinement*

14. What specific CAFO operation is discussed? (e.g., types of confinement area, etc., see below for detailed classification): *not known; report doesn't specify*

15. What are the physical parameters of the specific CAFO operation? (Volume, surface area, ventilation rate, etc) *not known*

16. What pollutants are discussed?: *NH3 and CH4, but Table 1 gives ambient concn. data for quantitative gas measurements for organic pollutants*

17. Are emissions data available? If yes, are they emission factors or total emissions?: *emission factors and emissions*

18. Are activity factors provided? What are the units? (e.g., tons of manure, 1000 head of cattle, tons of beef production, etc.

Kg live weight

19. What test methods/measurement activities were used to gather emissions information? Include description of whether measurement activities were made at one point in time or over a series of days/hours: *not known*

20. What units are emissions data in?: *tons/acre and %*

21. Provide pollutant specific emission data for the animal/CAFO combination (e.g., total emissions, emission factors, emissions per activity unit, etc.): *see file s:\cafo\summary\B,S,P,L,Oy.xls*

22. What were the climatic conditions/season when tests were conducted? (e.g., temperature, relative humidity, wind speed, time of day, month, etc): *not known*

23. What information is known about the feeds?: *none*

24. Additional manure information, including speciation and type of manure handled (liquid: < 3% total solids, slurry: 3-8% total solids, solid: >8% total solids) *not known*

25. Additional information:
Ammonia Emissions–Sources, sinks, effects, control. 1989. Arbeitsmaterialien des Bundesamtes fur Ernahrung und Forstwirtschaft, Frankfurt am Main, Germany, 1989.

A detailed ammonia emission map of the Netherlands. 1985. Rapport Nr. Lucht-41, Ministerie van Volkshuisvesting, Ruimtelijke Ordening en Milieubeheer, Leidschendam, Netherlands, 1985.

Janssen, A.J. The ammonia problem in the Netherlands. Staatsbosbeheer. 1985., cited in Ammonia Emissions-Sources, sinks, effects, control (see above).

Moller, D.; Schieferdecker, H. Ammonia emission and deposition of NHx in the GDR. Atmospheric Environment 1989. 23:1187-1193.

Asman, W.A.H.; van Jaarsveld, H.A. Regional and Europe-wide emissions and transport of NHx compounds. In: Hartung, J.; Paduch, M.; Schirz, S.; Dohler, H.; van den Weghe, H. (eds): Munster, Germany, 1990, 2.1-35.

26. Additional references of interest in the data source:
emission factors pulled from another report summary listed under 25.

27. Data concerns or caveats: *data based on studies in the former East and West Germany; test methodology is not defined; emission factors pulled from 5 other references that I do not have a copy of; suggest these refs be acquired and reviewed for applicability, etc.*

<u>Some specific CAFO operations</u>

- Confinement facility includes uncovered feedlot, free-stall barn, etc. It also includes type of ventilation such as natural or mechanical, and method of manure collection such as deep pit or pull plug pit or flushing.
- Waste Conveyance systems are usually open or closed
- Treatment systems include anaerobic lagoon, anaerobic digester, aerobic treatment, composting, etc.
- Waste storage units include closed tank, storage pond, open tank, storage shed, or open stacking
- End use includes surface spreading which can be solid or liquid manure spreading or irrigation with application rates and concentrations

AFO Project Data Summary Sheet

1. Data Source ID: *223* Reviewer Initials: *DG*

2. Data Source (i.e., book title, journal title, proceedings title, volume, issue, page #):

Not specified

3. Article Title:

Two Options for manure Treatment to Reduce Ammonia Emission from Pig Housing

4. Author:

Hoeksma, P., N. Verdoes, G. J. Monteny

5. Date of report/article:

Not specified (latest year cited in references is '92)

6. Location of study (city, State, region):

Netherlands (Sterksel and Raalte)

7. Animal types discussed: Beef Dairy Veal Swine Poultry-- broiler, layer, turkey Other (describe)

Swine

8. What pollutants are discussed:

ammonia

9. Is there any information related to controls or mitigation of air emissions?

Yes

10. Did the data source contain useful air information (emission factors or enough data to develop emission factors)? If "no", indicate why was it not useful (e.g., vague, no pollutant information) and a very brief summary of what it did have (e.g., "contained only seasonal flux measurements of pollutant concentrations in the surrounding air around a swine house, but no parameter data to develop emission factors). If the answer is "no", stop the review with this question. If the answer is "yes", continue with the remaining questions.

Yes

For each animal type discussed in the article answer the following questions (i.e., use a separate summary sheet for each animal type)

11. What animal type is addressed in the remainder of this summary sheet?

Swine

12. Number/Size/Age of animals present

80 finishing pigs

13. What general CAFO operations are covered by the data source?: (Feeding, Confinement, Waste Conveyance, Storage, Treatment, or End Use):

housing units

14. What specific CAFO operation is discussed? (e.g., types of confinement area, etc., see below for detailed classification):

covered housing unit of experimental pig farm

15. What are the physical parameters of the specific CAFO operation? (Volume, surface area, ventilation rate, etc)

Treatment system 1 was tested on a covered housing unit (in Sterksel) equipped with partially slatted floor (63% of pen area slatted) and 0.40 cm deep channels underneath slats. under each row of pens there were two channels, 0.60 and 1.60 m wide. Channels connected to collecting pit outside the house. A 0.10 m high threshold kept a stagnant layer of slurry in the channels. The present slurry was flushed out when the recirculation liquid was pumped into the channels from one end to the other. The slurry was removed twice a day. Two traditional finishing units with deep pit slurry storage underneath the slates served as control units. One unit had a fully slatted floor and a storage capacity for slurry of approx. 6 months. The other one was equipped with a partly slatted floor, similar to the experimental unit. Underneath the slats slurry was collected and removed weekly through drain pipes. The inside temperature was controlled by forced ventilation; inlet air came via a ventilation ceiling. Exhaust ventilation air went out via a shaft through the roof.

System 2 was tested at a farm in Rallte containing two identical units holding 80 finishing pigs each in two rows of pens. The unit floors were partly slatted (48% of the pen area slatted). Each unit had 0.60 m deep slurry pits underneath the pens, which were connected underneath the central corridor to create a U-shaped flushing channel. The slurry was slushed from the channel twice a day with treated slurry from a cistern outside the building, after opening a valve in a pipeline connected to a pit. After flushing, a 30 mm layer of fresh recirculation liquid was provided. The two units were equipped with ventilation ceilings. The air was sucked out underneath the floor. The ventilation shafts were located in the rear wall of the units.

16. What pollutants are discussed?:

ammonia

17. Are emissions data available? If yes, are they emission factors or total emissions?:

Yes. Emission factors.

18. Are activity factors provided? What are the units? (e.g., tons of manure, 1000 head of cattle, tons of beef production, etc.):

No.

19. What test methods/measurement activities were used to gather emissions information? Include description of whether measurement activities were made at one point in time or over a series of days/hours:

Ventilation flow rate and ammonia concentration in air were measured. Ammonia concentrations measured continuopusly with a Nox-analyzer, based on principle of chemiluminescence. Cumulative emissions were calculated, as well as average per day and per finishing round.

20. What units are emissions data in?:

g NH3/pig-day

21. Provide pollutant specific emission data for the animal/CAFO combination (e.g., total emissions, emission factors, emissions per activity unit, etc.):

see sum223sy.xls

22. What were the climatic conditions/season when tests were conducted? (e.g., temperature, relative humidity, wind speed, time of day, month, etc):

Not specified but differences in ammonia emissions attributed mostly to increases in ambient temperature.

23. What information is known about the feeds?:

only that the pigs evaluated using treatment system 1 were fattened from 25 to 110 kg in approx. 16 weeks with concentrates only

24. Additional manure information, including speciation and type of manure handled (liquid: < 3% total solids, slurry: 3-8% total solids, solid: >8% total solids)

Not specified

25. Additional information:

None

26. Additional references of interest in the data source:

Hoeksma, P., Verdoes, N. Oosthoek, J. and Voermans, J.A.M., 1992. Reduction of ammonia volatilization from pig houses using aerated slurry as recirculation liquid. Livest.. Prod. Sci., 31: 121-132.

27. Data concerns or caveats:

None

Some specific CAFO operations

- Confinement facility includes uncovered feedlot, free-stall barn, etc. It also includes type of ventilation such as natural or mechanical, and method of manure collection such as deep pit or pull plug pit or flushing.
- Waste Conveyance systems are usually open or closed
- Treatment systems include anaerobic lagoon, anaerobic digester, aerobic treatment, composting, etc.
- Waste storage units include closed tank, storage pond, open tank, storage shed, or open stacking
- End use includes surface spreading which can be solid or liquid manure spreading or irrigation with application rates and concentrations

AFO Project Data Summary Sheet

1. Data Source ID: *357* Reviewer Initials: *RGO*

2. Data Source (i.e., book title, journal title, proceedings title, volume, issue, page #):
J. Environ. Qual. Vol 11, no. 2, 1982 pp 288-293

3. Article Title: *Ammonia and Amine Emissions from a Large Cattle Feedlot*

4. Author: *Hutchinson, G.L. et al*

5. Date of report/article: *1982*

6. Location of study (city, State, region): *northeastern Colorado*

7. Animal types discussed: *Beef Cattle*

8. What pollutants are discussed:

Ammonia-N

9. Is there any information related to controls or mitigation of air emissions?
No

10. Did the data source contain useful air information (emission factors or enough data to develop emission factors)? If "no", indicate why was it not useful (e.g., vague, no pollutant information) and a very brief summary of what it did have (e.g., "contained only seasonal flux measurements of pollutant concentrations in the surrounding air around a swine house, but no parameter data to develop emission factors). If the answer is "no", stop the review with this question. If the answer is "yes", continue with the remaining questions.

Yes - emission flux densities...

For each animal type discussed in the article answer the following questions (i.e., use a separate summary sheet for each animal type)

11. What animal type is addressed in the remainder of this summary sheet?
Beef

12. Number/Size/Age of animals present
120,000 beef cattle, with a density of 840 head per hectare

13. What general CAFO operations are covered by the data source?: (Feeding, Confinement, Waste Conveyance, Storage, Treatment, or End Use):
Confinement

14. What specific CAFO operation is discussed? (e.g., types of confinement area, etc., see below for detailed classification):

Feedlot

15. What are the physical parameters of the specific CAFO operation? (Volume, surface area, ventilation rate, etc)

None identified

16. What pollutants are discussed?:

Ammonia-N

17. Are emissions data available? If yes, are they emission factors or total emissions?:

Yes - emission factor data is available (See "Sum357By.xls")

18. Are activity factors provided? What are the units? (e.g., tons of manure, 1000 head of cattle, tons of beef production, etc.):

120,000 at this farm

19. What test methods/measurement activities were used to gather emissions information? Include description of whether measurement activities were made at one point in time or over a series of days/hours:

Micrometeorological technique for sampling

20. What units are emissions data in?:

kg N/ha/hr

21. Provide pollutant specific emission data for the animal/CAFO combination (e.g., total emissions, emission factors, emissions per activity unit, etc.):

See "Sum357By.xls"

22. What were the climatic conditions/season when tests were conducted? (e.g., temperature, relative humidity, wind speed, time of day, month, etc):

Equivalent temperature was used in flux calculation, but no table of temperatures were provided. 5 samples were taken from April through July with their environmental condition (see "Sum357By.xls")

23. What information is known about the feeds?:

None

24. Additional manure information, including speciation and type of manure handled (liquid: < 3% total solids, slurry: 3-8% total solids, solid: >8% total solids)

No information was provided

25. Additional information:

None

26. Additional references of interest in the data source:

None

27. Data concerns or caveats:

Data is from 1977

<u>Some specific CAFO operations</u>

- Confinement facility includes uncovered feedlot, free-stall barn, etc. It also includes type of ventilation such as natural or mechanical, and method of manure collection such as deep pit or pull plug pit or flushing.
- Waste Conveyance systems are usually open or closed
- Treatment systems include anaerobic lagoon, anaerobic digester, aerobic treatment, composting, etc.
- Waste storage units include closed tank, storage pond, open tank, storage shed, or open stacking
- End use includes surface spreading which can be solid or liquid manure spreading or irrigation with application rates and concentrations

AFO Project Data Summary Sheet

1. Data Source ID: *509* Reviewer Initials: *JMH*

2. Data Source (i.e., book title, journal title, proceedings title, volume, issue, page #):
1999 ASAE Meeting Presentation, Toronto, Canada
3. Article Title:
Odor and Gas Emissions from Animal Manure Storage Units and Buildings
4. Author:
Jacobson et al.
5. Date of report/article:
July, 1999
6. Location of study (city, State, region):
Minnesota
7. Animal types discussed: Beef **Dairy** Veal **Swine** Poultry-**Broiler** Layer **Turkey**

8. What pollutants are discussed:*H2S*

9. Is there any information related to controls or mitigation of air emissions?

10. Did the data source contain useful air information (emission factors or enough data to develop emission factors)? If "no", indicate why was it not useful (e.g., vague, no pollutant information) and a very brief summary of what it did have (e.g., "contained only seasonal flux measurements of pollutant concentrations in the surrounding air around a swine house, but no parameter data to develop emission factors). If the answer is "no", stop the review with this question. If the answer is "yes", continue with the remaining questions.
Yes, but will need additional information. Information is presented in a ug/s/m2 format with the number of animals given for numerous types of animal buildings. However, to be able to develop viable EFs will need the area of the building.

For each animal type discussed in the article answer the following questions (i.e., use a separate summary sheet for each animal type):

11. What animal type is addressed in the remainder of this summary sheet?
dairy
12. Number/Size/Age of animals present
Article gives number of animals and type for each of 29 farms.
13. What general CAFO operations are covered by the data source?: (Feeding, Confinement, Waste Conveyance, Storage, Treatment, or End Use):
Confinement and storage
14. What specific CAFO operation is discussed? (e.g., types of confinement area, etc., see below for detailed classification):
Numerous... Steers, dairy, swine, broiler, turkey confinement operations.
15. What are the physical parameters of the specific CAFO operation? (Volume, surface area,

ventilation rate, etc)
Ventilation type known, but area is not.
16. What pollutants are discussed?:
H2S

17. Are emissions data available? If yes, are they emission factors or total emissions?:
Yes, total emissions per square meter
18. Are activity factors provided? What are the units? (e.g., tons of manure, 1000 head of cattle, tons of beef production, etc.): *ug/s/m2*

19. What test methods/measurement activities were used to gather emissions information? Include description of whether measurement activities were made at one point in time or over a series of days/hours. Also, if possible, describe sample collection technique, sample analysis methods, and any QA/QC procedures performed (e.g. equipment blanks, trip blanks, etc.): *Locations sampled at three times during year (spring, summer, fall). Each sample collected in a Tedlar bag using a sampling/vacuum hood, and analyzed using a Jerome meter.*

20. What units are emissions data in?: *ug/s/sq meter*

21. Provide pollutant specific emission data for the animal/CAFO combination (e.g., total emissions, emission factors, emissions per activity unit, etc.) NOTE: IT MAY BE MOST CONVENIENT TO CREATE A SPREADSHEET FOR THIS DATA. PLEASE INDICATE THE FILENAME IF A SEPARATE SPREADSHEET CONTAINS THE EMISSION FACTOR DATA FROM THIS REFERENCE: *Spreadsheet not created due to schedule and fact that as presented, information not suitable for EF development.*

22. What were the climatic conditions/season when tests were conducted? (e.g., temperature, relative humidity, wind speed, time of day, month, etc) Were data presented for different seasons?:

23. What information is known about the feeds?:

24. Additional manure information, including speciation and type of manure handled (liquid: < 3% total solids, slurry: 3-8% total solids, solid: >8% total solids)

25. Additional information:

26. Additional references of interest in the data source:

27. Data concerns or caveats: *Unusable as is, but author contact on the size of each farm would enable development of EF.*

<u>Some specific CAFO operations</u>

- Confinement facility includes uncovered feedlot, free-stall barn, etc. It also includes type of ventilation such as natural or mechanical, and method of manure collection such as

deep pit or pull plug pit or flushing.

- Waste Conveyance systems are usually open or closed
- Treatment systems include anaerobic lagoon, anaerobic digester, aerobic treatment, composting, etc.

AFO Project Data Summary Sheet

1. Data Source ID: *483* Reviewer Initials: *BS*

2. Data Source (i.e., book title, journal title, proceedings title, volume, issue, page #):
Paper prepared for the Environmental Quality Board
3. Article Title:
Generic Environmental Impact Statement on Animal Agriculture: A Summary of the Literature Related to Air Quality and Odor (H)
4. Author:
Jacobson, et al. (University of Minnesota)
5. Date of report/article:
September, 1999
6. Location of study (city, State, region):
NA
7. Animal types discussed:
Dairy Cattle Swine Poultry
8. What pollutants are discussed:
Ammonia, Hydrogen Sulfide, PM, dust, Methane,
9. Is there any information related to controls or mitigation of air emissions?
Yes. One, extensive 63-page section is devoted to the discussion of mitigation and emission control technologies. A large number of technologies, their advantages, effectiveness, cost, and recommendations for further research are included.
10. Did the data source contain useful air information (emission factors or enough data to develop emission factors)? If "no", indicate why was it not useful (e.g., vague, no pollutant information) and a very brief summary of what it did have (e.g., "contained only seasonal flux measurements of pollutant concentrations in the surrounding air around a swine house, but no parameter data to develop emission factors). If the answer is "no", stop the review with this question. If the answer is "yes", continue with the remaining questions.
Yes. This document serves as a literature summary designed to support the development of the General Environmental Impact Statement; a comprehensive Minnesota funded study obligated to examine the long-term effects of the livestock industry and how it is changing the environement and its citizens; and answer specific "scoping" questions and research needed for completion of the GEIS. The paper is presented as a composite of answers to several questions. Those sections discuss: quantifying emissions and environmental impacts as a function of species, size, and management; health risks and impacts as a function of species, size, and management (this section explores and identifies health risks and symptoms that result from exposure to pollutants emitted from sources); mitigation and emission control technologies (table 15 presents a 6 page summary of the technologies used for odor control, their disadvantages, advantages, cost, and research status); and a section the lists summaries of major current or ongoing research.

For each animal type discussed in the article answer the following questions (i.e., use a separate summary sheet for each animal type):

11. What animal type is addressed in the remainder of this summary sheet?

NA
12. Number/Size/Age of animals present
NA
13. What general CAFO operations are covered by the data source?: (Feeding, Confinement, Waste Conveyance, Storage, Treatment, or End Use):
All
14. What specific CAFO operation is discussed? (e.g., types of confinement area, etc., see below for detailed classification):
Various
15. What are the physical parameters of the specific CAFO operation? (Volume, surface area, ventilation rate, etc)
NA
16. What pollutants are discussed?:
NA
17. Are emissions data available? If yes, are they emission factors or total emissions?:
Yes. Emissions factors, concentrations, and total emissions
18. Are activity factors provided? What are the units? (e.g., tons of manure, 1000 head of cattle, tons of beef production, etc.):
Varies
19. What test methods/measurement activities were used to gather emissions information? Include description of whether measurement activities were made at one point in time or over a series of days/hours. Also, if possible, describe sample collection technique, sample analysis methods, and any QA/QC procedures performed (e.g. equipment blanks, trip blanks, etc.):
Various. The document provides a 20-page summary about measuring, modeling, and monitoring emissions. The summary includes information about the method and equipment, focus pollutant(s), associated difficulties, studies in which certain methods were used, limitations, and a comprehensive table summarizing odor limitations and standard measurement methods.
20. What units are emissions data in?:
Various
21. Provide pollutant specific emission data for the animal/CAFO combination (e.g., total emissions, emission factors, emissions per activity unit, etc.)
See Sum483DCSPy.xls
22. What were the climatic conditions/season when tests were conducted? (e.g., temperature, relative humidity, wind speed, time of day, month, etc) Were data presented for different seasons?:
Varies
23. What information is known about the feeds?:
NA
24. Additional manure information, including speciation and type of manure handled (liquid: < 3% total solids, slurry: 3-8% total solids, solid: >8% total solids)
NA
25. Additional information:

26. Additional references of interest in the data source:
I noticed that we have several documents referenced by this source.

27. Data concerns or caveats:

AFO Project Data Summary Sheet

1. Data Source ID: 87(a)

2. Data Source (i.e., book title, journal title, proceedings title, volume, issue, page #):
Volatile Emissions from Livestock Farming and Sewage Operations
3. Article Title:
Ammonia Emissions from Poultry Housing Systems
4. Author:
W. Kroodsma, R. Scholtens, J. Huis
5. Date of report/article:
1988
6. Location of study (city, State, region):
Netherlands
7. Did the data source contain useful air information? If not, why was it not useful, e.g., vague, no pollutant information, etc.:
May not be much use since data is based on European farming practices
For each combination of animal and CAFO operation answer the following questions (i.e., use a separate summary sheet for each animal-CAFO combination)

8. Animal: Poultry-- broiler

9. Number/Size/Age of animals present
No information provided.
10. What general CAFO operations are covered by the data source?: (Feeding, Confinement, Waste Conveyance, Storage, Treatment, or End Use):
waste handling
11. What specific CAFO operation is discussed? (e.g., types of confinement area, etc., see below for detailed classification):
waste handling, litter types, and decomposition of manure
12. What are the physical parameters of the specific CAFO operation? (Volume, surface area, ventilation rate, etc)
Two types of experimental compartments:
1. A compartment with non-insulated concrete floor and litter
2. A compartment with underfloor heating and and insulated concrete floor with litter.

The roof of each compartment is equipped with an extractor fan.

13. What pollutants are discussed?:
Ammonia
14. Are emissions data available? If yes, are they emission factors or total emissions?:
Emission factors
15. Are activity factors provided? What are the units? (e.g., tons of manure, 1000 head of cattle, tons of beef production, etc.):
No data provided
16. What test methods/measurement activities were used to gather emissions information?

Include description of whether measurement activities were made at one point in time or over a series of days/hours:

Collected air samples every three hours. Measured ammonia levels with a "NH_3 monitor." The temperature, humidity, and ventilation capacity for each compartment were also recorded.

17. What units are emissions data in?:

Emission Factor - g of NH_3/ broiler

Total emissions - kg NH_3

18. Provide pollutant specific emission data for the animal/CAFO combination (e.g., total emissions, emissions per activity unit, etc.):

Ammonia emissions from the broiler compartments were monitored during two fattening periods. The first period used wood shavings for litter, while the second period used chopped straw for litter. Each fattening period was approximately 40 days.

Broiler House Type	First Period (Litter = Wood Shaving)		Second Period (Litter = Chopped Straw)	
	Ammonia Emissions (kg)	Emission Factor (g/broiler)	Ammonia Emissions (kg)	Emission Factor (g/broiler)
Non-insulated floor	27.4	21.9	12.5	10.0
Underfloor heating	25.0	20.0	9.0	7.2

19. What were the climatic conditions/season when tests were conducted? (e.g., temperature, relative humidity, wind speed, time of day, month, etc):

No information provided

20. What information is known about the feeds?:

No information provided.

21. Additional manure information, including speciation and type of manure handled (liquid: < 3% total solids, slurry: 3-8% total solids, solid: >8% total solids)

No information on manure characteristics.

The pH and dry matter content of the litter were measured :

	First Period (wood shavings)		Second Period (chopped straw)	
Broiler House Type	Dry Matter (%)	pH	Dry Matter (%)	pH
Non-insulated Floor	54.9	8.9	79.2	8.4
Underfloor heating	57.4	8.9	76.8	8.2

Note that the difference in dry matter content may have been due to drinking water spilling onto the litter

22. Additional information:

This article also provides data on the decomposition manure collected from the broiler compartment with the underfoor heating. After each fattening period, the manure was collected

and placed in an insulated container. Air was passed over the manure for a period of seven to eight days. The ammonia concentration and the air flow was recorded. The largest ammonia emissions were produced from the first period (the wet manure).

Broiler manure with 57.4 % dry matter = 4.47 kg/1000 kg manure or 7.1 g/broiler
Broiler manure with 70.2 % dry matter = 1.68 kg/1000 kg manure or 1.1 g/broiler

Total ammonia emissions (i.e., fattening and decomposition):

Broiler House Type	First Period (wood shavings)			Second Period (chopped straw)		
	Fattening	Decomposition	Total	Fattening	Decomposition	Total
Non-insulated floor	21.9	7.1	29.0	10.0	1.1	11.1
Underfloor heating	20.0	7.1	27.1	7.2	1.1	8.3

* all emissions are in g/broiler.

23. Additional references of interest in the data source:
None
24. Data concerns or caveats:
Data specific to poultry farms in the Netherlands and may not be applicable to U.S. poultry farming practices. Data is described as preliminary.

<u>Some specific CAFO operations</u>

- Confinement facility includes uncovered feedlot, free-stall barn, etc. It also includes type of ventilation such as natural or mechanical, and method of manure collection such as deep pit or pull plug pit or flushing.
- Waste Conveyance systems are usually open or closed
- Treatment systems include anaerobic lagoon, anaerobic digester, aerobic treatment, composting, etc.
- Waste storage units include closed tank, storage pond, open tank, storage shed, or open stacking
- End use includes surface spreading which can be solid or liquid manure spreading or irrigation with application rates and concentrations

AFO Project Data Summary Sheet

1. Data Source ID: *484* Reviewer Initials: *JMH*

2. Data Source (i.e., book title, journal title, proceedings title, volume, issue, page #):
Report Submitted by Jack Martin
3. Article Title:
A Comparison of the Performance of Three Swine Waste Stabilization Systems
4. Author:
Dr. John H. Martin, Jr., Ph. D.
5. Date of report/article:
October 2000
6. Location of study (city, State, region):
central North Carolina
7. Animal types discussed: ***Swine***

8. What pollutants are discussed: *Ammonia*

9. Is there any information related to controls or mitigation of air emissions?
Yes, covered lagoon with biogas-fired engine/generator.
10. Did the data source contain useful air information (emission factors or enough data to develop emission factors)? If "no", indicate why was it not useful (e.g., vague, no pollutant information) and a very brief summary of what it did have (e.g., "contained only seasonal flux measurements of pollutant concentrations in the surrounding air around a swine house, but no parameter data to develop emission factors). If the answer is "no", stop the review with this question. If the answer is "yes", continue with the remaining questions. *Yes.*

For each animal type discussed in the article answer the following questions (i.e., use a separate summary sheet for each animal type):

11. What animal type is addressed in the remainder of this summary sheet?
Swine
12. Number/Size/Age of animals present
Three pull-plug pit house operations, each with different lagoon types. Size and type of operation as follows:
Covered anaerobic lagoon – 4240 head farrow-to-wean
Minimally aerated single cell lagoon – 5400 head finishing
Single cell anaerobic – 8100 head finishing

13. What general CAFO operations are covered by the data source?: (Feeding, Confinement, Waste Conveyance, Storage, Treatment, or End Use): *Treatment*

14. What specific CAFO operation is discussed? (e.g., types of confinement area, etc., see below for detailed classification): *Pull-plug pit confinement, three types of lagoon operation*

15. What are the physical parameters of the specific CAFO operation? (Volume, surface area, ventilation rate, etc)
Covered anaerobic: 912,500 cuft volume, effluent storage pond max capacity 1,851,200 cuft
Aerated lagoon: estimated max. capacity is 971,025 cuft.
Anaerobic: estimated max. capacity is 1,169,820 cuft.

16. What pollutants are discussed?: *Ammonia, volatile solids (not a pollutant, but has PTE)*

17. Are emissions data available? If yes, are they emission factors or total emissions?:
Yes, per discussion with Jack (author), the total nitrogen loss due to ammonia volatilization is sufficient to use to calculate emission factors.
18. Are activity factors provided? What are the units? (e.g., tons of manure, 1000 head of cattle, tons of beef production, etc.): *Based on TKN in manure going to the lagoon/storage pond.*

19. What test methods/measurement activities were used to gather emissions information? Include description of whether measurement activities were made at one point in time or over a series of days/hours. Also, if possible, describe sample collection technique, sample analysis methods, and any QA/QC procedures performed (e.g. equipment blanks, trip blanks, etc.):
Samples taken at biweekly intervals for 12 month period. Influent and effluent samples taken. Flow rate data collected, including effluent withdrawals. Covered lagoon parameters such as temperature, precipitation, and daily biogas utilization recorded.

20. What units are emissions data in?: *Percent reduction of nitrogen.*

21. Provide pollutant specific emission data for the animal/CAFO combination (e.g., total emissions, emission factors, emissions per activity unit, etc.) NOTE: IT MAY BE MOST CONVENIENT TO CREATE A SPREADSHEET FOR THIS DATA. PLEASE INDICATE THE FILENAME IF A SEPARATE SPREADSHEET CONTAINS THE EMISSION FACTOR DATA FROM THIS REFERENCE:
61% of total nitrogen loss is due to ammonia volatilization from covered lagoon-storage pond system. Approximately 60% total nitrogen loading is volatilized as ammonia from the anaerobic stabilization and storage lagoon. For the study, Jack suggested applying the average reduction to the nitrogen amount in swine waste.

22. What were the climatic conditions/season when tests were conducted? (e.g., temperature, relative humidity, wind speed, time of day, month, etc) Were data presented for different seasons?: *Year round data, not broken out seasonally.*

23. What information is known about the feeds?: *None.*

24. Additional manure information, including speciation and type of manure handled (liquid: < 3% total solids, slurry: 3-8% total solids, solid: >8% total solids)
Data focuses mainly on manure characteristics. Broken out by operation type (farrowing, gestation, etc.). Total solids, nitrogen content, volatile solids, etc. also presented.

25. Additional information:

26. Additional references of interest in the data source:

27. Data concerns or caveats:
Not an outright emission factor. To develop emission factors, have to multiply the nitrogen content by the volatilization factor (61%) and account for number of animals. Used 500 Animal unit nitrogen excretion amount times 0.61 to develop emission factor in report, per Jack Martin's advice.

<u>Some specific CAFO operations</u>

- Confinement facility includes uncovered feedlot, free-stall barn, etc. It also includes type of ventilation such as natural or mechanical, and method of manure collection such as deep pit or pull plug pit or flushing.
- Waste Conveyance systems are usually open or closed
- Treatment systems include anaerobic lagoon, anaerobic digester, aerobic treatment, composting, etc.
- Waste storage units include closed tank, storage pond, open tank, storage shed, or open stacking
- End use includes surface spreading which can be solid or liquid manure spreading or irrigation with application rates and concentrations

AFO Project Data Summary Sheet

1. Data Source ID: *495* Reviewer Initials: *JMH*

2. Data Source (i.e., book title, journal title, proceedings title, volume, issue, page #):
Journal of Agricultural Engineering Research
3. Article Title:
Estimates of Ammonia Emission from Dairy Cow Collecting Yards
4. Author:
T.H. Misselbrook, B.F. Pain, D.M. Headon
5. Date of report/article:
1998
6. Location of study (city, State, region):
England
7. Animal types discussed: Beef **Dairy** Veal Swine Poultry-Broiler Layer Turkey

8. What pollutants are discussed:
ammonia
9. Is there any information related to controls or mitigation of air emissions?
No
10. Did the data source contain useful air information (emission factors or enough data to develop emission factors)? If "no", indicate why was it not useful (e.g., vague, no pollutant information) and a very brief summary of what it did have (e.g., "contained only seasonal flux measurements of pollutant concentrations in the surrounding air around a swine house, but no parameter data to develop emission factors). If the answer is "no", stop the review with this question. If the answer is "yes", continue with the remaining questions.
Yes

For each animal type discussed in the article answer the following questions (i.e., use a separate summary sheet for each animal type):

11. What animal type is addressed in the remainder of this summary sheet? *Dairy cow*

12. Number/Size/Age of animals present
70 cows
13. What general CAFO operations are covered by the data source?: (Feeding, Confinement, Waste Conveyance, Storage, Treatment, or End Use):
Confinement
14. What specific CAFO operation is discussed? (e.g., types of confinement area, etc., see below for detailed classification): *Dairy confinement (drylot)*

15. What are the physical parameters of the specific CAFO operation? (Volume, surface area, ventilation rate, etc) *87 sq. meters, has a concrete surface*

16. What pollutants are discussed?: *ammonia*

17. Are emissions data available? If yes, are they emission factors or total emissions?:
Yes, emission factors
18. Are activity factors provided? What are the units? (e.g., tons of manure, 1000 head of cattle, tons of beef production, etc.): *g N/cow-day*

19. What test methods/measurement activities were used to gather emissions information? Include description of whether measurement activities were made at one point in time or over a series of days/hours. Also, if possible, describe sample collection technique, sample analysis methods, and any QA/QC procedures performed (e.g. equipment blanks, trip blanks, etc.):
Collection hoods over surface would capture ammonia in glass wool filters covered with oxalic acid for inlet air. Absorption flasks with orthophosphoric acid were used to measure concentration of ammonia from filtered inlet air and outlet (from drylot surface) air. Measurements performed for 24 hour periods, with hoods removed only when cows were brought into the yard and when the yard was scraped.

20. What units are emissions data in?:
g N/cow-day
21. Provide pollutant specific emission data for the animal/CAFO combination (e.g., total emissions, emission factors, emissions per activity unit, etc.) NOTE: IT MAY BE MOST CONVENIENT TO CREATE A SPREADSHEET FOR THIS DATA. PLEASE INDICATE THE FILENAME IF A SEPARATE SPREADSHEET CONTAINS THE EMISSION FACTOR DATA FROM THIS REFERENCE:
8.3 gN/cow-day
22. What were the climatic conditions/season when tests were conducted? (e.g., temperature, relative humidity, wind speed, time of day, month, etc) Were data presented for different seasons?: *Summer and winter in England averaged*

23. What information is known about the feeds?:

24. Additional manure information, including speciation and type of manure handled (liquid: < 3% total solids, slurry: 3-8% total solids, solid: >8% total solids)

25. Additional information:

26. Additional references of interest in the data source:

27. Data concerns or caveats: *This lot is covered with concrete. This may not be comparable with our model drylots for dairy. Will need to check with Jack and see if reasonably similar.*

<u>Some specific CAFO operations</u>

- Confinement facility includes uncovered feedlot, free-stall barn, etc. It also includes type of ventilation such as natural or mechanical, and method of manure collection such as

deep pit or pull plug pit or flushing.

- Waste Conveyance systems are usually open or closed
- Treatment systems include anaerobic lagoon, anaerobic digester, aerobic treatment, composting, etc.

AFO Project Data Summary Sheet

1. Data Source ID: *489*

2. Data Source (i.e., book title, journal title, proceedings title, volume, issue, page #):

Journal of Agricultural Engineering Resources

3. Article Title: *Ammonia, Hydrogen Sulphide and Carbon Dioxide Release from Pig Manure in Under-floor Deep Pits*

4. Author: *JiQin Ni, Albert J. Heber, Claude A. Diehl, Teng T. Lim*

5. Date of report/article: *5/25/00*

6. Location of study (city, State, region): *Indiana (based on acknowledgments at the end of article)*

7. Did the data source contain useful air information? If not, why was it not useful, e.g., vague, no pollutant information, etc.: *Yes*

For each combination of animal and CAFO operation answer the following questions (i.e., use a separate summary sheet for each animal-CAFO combination)

8. Animal: Beef Dairy Veal ***Swine*** Poultry-- broiler, layer, turkey Other

9. Number/Size/Age of animals present

Two buildings tested (each identical: 1,000 head fattening pigs) but the buildings did not contain pigs during the tests. Five days before first test, building 3A housed 115 pigs at 120 kg each. four days before the second test, building 3B housed 169 pigs at 120 kg each.

10. What general CAFO operations are covered by the data source?: (Feeding, Confinement, Waste Conveyance, Storage, Treatment, or End Use): *indoor confinement*

11. What specific CAFO operation is discussed? (e.g., types of confinement area, etc., see below for detailed classification): *indoor confinement with under-floor deep pit storage; mechanical tunnel and pit ventilation; slatted floors*

12. What are the physical parameters of the specific CAFO operation? (Volume, surface area, ventilation rate, etc)

- *surface are per pit = 800 m2*
- *design manure depth = 2.4 m*
- *actual manure depth = 102 cm (building 3A) and 131 cm (building 3B)*
- *the rooms were cleaned before the tests*

- *building 3A received a pit additive during the test, used pit ventilation-mode, and received 1hr of heating with one direct-fire propane heater*
- *building 3B did not receive pit additive during the test, used tunnel ventilation-mode, and received 2hr of with two heating w/direct-fire propane heater*

13. What pollutants are discussed?:
ammonia, hydrogen sulfide, carbon dioxide

14. Are emissions data available? If yes, are they emission factors or total emissions?:
Yes. Release rates for ammonia, hydrogen sulfide, carbon dioxide are provided.

15. Are activity factors provided? What are the units? (e.g., tons of manure, 1000 head of cattle, tons of beef production, etc.): *Yes. The number and weight of pigs is provided for each test (although the duration of total time the animals were in the building was not given). Also, the volume of manure in each building was given.*

16. What test methods/measurement activities were used to gather emissions information? Include description of whether measurement activities were made at one point in time or over a series of days/hours:

17. What units are emissions data in?:
Release rates are given in grams/hour.

18. Provide pollutant specific emission data for the animal/CAFO combination (e.g., total emissions, emissions per activity unit, etc.):

building 3A test

pollutant	*before heating*	*during heating*	*one hour after heating*
NH3 (g/h)	*93 ± 11*	*167 ± 11*	*68 ± 2*
H2S (g/h)	*4.9 ± 0.5*	*6.1 ± 0.8*	*3.8 ± 0.6*
CO2 (kg/h)	*3.3 ± 0.2*	*not calculated*	*2.2 ± 0.2*

building 3B test

pollutant	*before heating*	*during heating*	*one hour after heating*
NH3 (g/h)	*not calculated*	*46.1 ± 1.7*	*31.8 ± 1.1*
H2S (g/h)	*not calculated*	*1.3 ± 0.2*	*1.7 ± 0.1*
CO2 (kg/h)	*not calculated*	*20.8 ± 0.5*	*4.0 ± 0.3*

19. What were the climatic conditions/season when tests were conducted? (e.g., temperature, relative humidity, wind speed, time of day, month, etc):

- *building 3A test conducted June 12-13*
- *building 3B test conducted June 18-19*
- *tests were conducted at night to remove the impact of insolation and temperature increases due to sunlight*
-

20. What information is known about the feeds?:

None

21. Additional manure information, including speciation and type of manure handled (liquid: < 3% total solids, slurry: 3-8% total solids, solid: >8% total solids)
None

22. Additional information:
None

23. Additional references of interest in the data source:
None

24. Data concerns or caveats:

the buildings were emptied of animals and cleaned to isolate the emissions from pit storage

<u>Some specific CAFO operations</u>

- Confinement facility includes uncovered feedlot, free-stall barn, etc. It also includes type of ventilation such as natural or mechanical, and method of manure collection such as deep pit or pull plug pit or flushing.
- Waste Conveyance systems are usually open or closed
- Treatment systems include anaerobic lagoon, anaerobic digester, aerobic treatment, composting, etc.
- Waste storage units include closed tank, storage pond, open tank, storage shed, or open stacking
- End use includes surface spreading which can be solid or liquid manure spreading or irrigation with application rates and concentrations

AFO Project Data Summary Sheet

1. Data Source ID: *10* Reviewer Initials: *RGO*

2. Data Source (i.e., book title, journal title, proceedings title, volume, issue, page #):
State Report by NC DENR, DAQ

3. Article Title: *Status Report on Emissions and Deposition of Atmospheric Nitrogen Compounds from Animal Production in North Carolina*

4. Author: North Carolina DENR

5. Date of report/article: *June 7, 1999*

6. Location of study (city, State, region): *Site described as "Eastern Farm" in Sampson County in North Carolina*

7. Animal types discussed: *Swine*

8. What pollutants are discussed: *Nitrogen from Lagoons*

9. Is there any information related to controls or mitigation of air emissions?
No

10. Did the data source contain useful air information (emission factors or enough data to develop emission factors)? If "no", indicate why was it not useful (e.g., vague, no pollutant information) and a very brief summary of what it did have (e.g., "contained only seasonal flux measurements of pollutant concentrations in the surrounding air around a swine house, but no parameter data to develop emission factors). If the answer is "no", stop the review with this question. If the answer is "yes", continue with the remaining questions.

Yes - emission factor fluxes from the lagoon at the "Eastern Farm"

For each animal type discussed in the article answer the following questions (i.e., use a separate summary sheet for each animal type)

11. What animal type is addressed in the remainder of this summary sheet?
Swine

12. Number/Size/Age of animals present
Not identified - information is confidential

13. What general CAFO operations are covered by the data source?: (Feeding, Confinement, Waste Conveyance, Storage, Treatment, or End Use):
Not identified - information is confidential

14. What specific CAFO operation is discussed? (e.g., types of confinement area, etc., see below for detailed classification):

Not identified - information is confidential

15. What are the physical parameters of the specific CAFO operation? (Volume, surface area, ventilation rate, etc)

Not identified - information is confidential

16. What pollutants are discussed?:

Ammonia-N

17. Are emissions data available? If yes, are they emission factors or total emissions?:

Yes - emission factor data is available (See "Sum10Sy.xls")

18. Are activity factors provided? What are the units? (e.g., tons of manure, 1000 head of cattle, tons of beef production, etc.):

No

19. What test methods/measurement activities were used to gather emissions information? Include description of whether measurement activities were made at one point in time or over a series of days/hours:

3 different methods: Open-Path FTIR; Micrometeorological; and Dynamic Flow-through chamber technique

20. What units are emissions data in?:

microgram N per meter squared per min

21. Provide pollutant specific emission data for the animal/CAFO combination (e.g., total emissions, emission factors, emissions per activity unit, etc.):

See "Sum10Sy.xls"

22. What were the climatic conditions/season when tests were conducted? (e.g., temperature, relative humidity, wind speed, time of day, month, etc):

Factors were developed for all four seasons

23. What information is known about the feeds?:

None is provided

24. Additional manure information, including speciation and type of manure handled (liquid: < 3% total solids, slurry: 3-8% total solids, solid: >8% total solids)

None is provided

25. Additional information:

None

26. Additional references of interest in the data source:

None

27. Data concerns or caveats:

No data parameters were in this report probably due to confidentiality.

<u>Some specific CAFO operations</u>

- Confinement facility includes uncovered feedlot, free-stall barn, etc. It also includes type of ventilation such as natural or mechanical, and method of manure collection such as deep pit or pull plug pit or flushing.
- Waste Conveyance systems are usually open or closed
- Treatment systems include anaerobic lagoon, anaerobic digester, aerobic treatment, composting, etc.
- Waste storage units include closed tank, storage pond, open tank, storage shed, or open stacking
- End use includes surface spreading which can be solid or liquid manure spreading or irrigation with application rates and concentrations

AFO Project Data Summary Sheet

1. Data Source ID: *89* Reviewer Initials: *BH*

2. Data Source (i.e., book title, journal title, proceedings title, volume, issue, page #): *Elsevier Applied Science, 1991*

3. Article Title: *Ammonia Emission from Dairy and Pig Housing Systems*

4. Author: *J. Oosthoek, W. Kroodsma, and P. Hoeksma*

5. Date of report/article: *1991*

6. Location of study (city, State, region): *Netherlands*

7. Animal types discussed: *Dairy, Swine*

8. What pollutants are discussed: *Ammonia*

9. Is there any information related to controls or mitigation of air emissions? *No.*

10. Did the data source contain useful air information (emission factors or enough data to develop emission factors)? If "no", indicate why was it not useful (e.g., vague, no pollutant information) and a very brief summary of what it did have (e.g., "contained only seasonal flux measurements of pollutant concentrations in the surrounding air around a swine house, but no parameter data to develop emission factors). If the answer is "no", stop the review with this question. If the answer is "yes", continue with the remaining questions. *Yes, but only for fattening pigs.*

For each animal type discussed in the article answer the following questions (i.e., use a separate summary sheet for each animal type)

11. What animal type is addressed in the remainder of this summary sheet? *Fattening Pigs*

12. Number/Size/Age of animals present *96 Fattening pigs*

13. What general CAFO operations are covered by the data source?: (Feeding, Confinement, Waste Conveyance, Storage, Treatment, or End Use): *Confinement*

14. What specific CAFO operation is discussed? (e.g., types of confinement area, etc., see below for detailed classification): *Housing*

15. What are the physical parameters of the specific CAFO operation? (Volume, surface area, ventilation rate, etc) *See sum089sy.xls*

16. What pollutants are discussed?: *ammonia*

17. Are emissions data available? If yes, are they emission factors or total emissions?: *factors*

18. Are activity factors provided? What are the units? (e.g., tons of manure, 1000 head of cattle, tons of beef production, etc.): *No.*

19. What test methods/measurement activities were used to gather emissions information? Include description of whether measurement activities were made at one point in time or over a series of days/hours: *measured flow rates, ammonia concentrations in exhaust air*

20. What units are emissions data in?: *kg N/pig place; kg N/pig-year*

21. Provide pollutant specific emission data for the animal/CAFO combination (e.g., total emissions, emission factors, emissions per activity unit, etc.): *see sum089sy.xls*

22. What were the climatic conditions/season when tests were conducted? (e.g., temperature, relative humidity, wind speed, time of day, month, etc):

23. What information is known about the feeds?: *none*

24. Additional manure information, including speciation and type of manure handled (liquid: < 3% total solids, slurry: 3-8% total solids, solid: >8% total solids)

25. Additional information:

26. Additional references of interest in the data source:

27. Data concerns or caveats:

<u>Some specific CAFO operations</u>

- Confinement facility includes uncovered feedlot, free-stall barn, etc. It also includes type of ventilation such as natural or mechanical, and method of manure collection such as deep pit or pull plug pit or flushing.
- Waste Conveyance systems are usually open or closed
- Treatment systems include anaerobic lagoon, anaerobic digester, aerobic treatment, composting, etc.
- Waste storage units include closed tank, storage pond, open tank, storage shed, or open stacking
- End use includes surface spreading which can be solid or liquid manure spreading or irrigation with application rates and concentrations

AFO Project Data Summary Sheet

1. Data Source ID: *508* Reviewer Initials: *JNF*

2. Data Source (i.e., book title, journal title, proceedings title, volume, issue, page #):
Journal of Agricultural Safety and Health 6(4): 261-274

3. Article Title:
Dust in Pig Buildings

4. Author:
S. Pedersen, M. Nonnenmann, R. Rautiainen, T.G.M. Demmers, T. Banhazi, M. Lyngbye

5. Date of report/article:
2000

6. Location of study (city, State, region):
compilation of North European studies

7. Animal types discussed: Beef Dairy Veal **Swine** Poultry-Broiler Layer Turkey

8. What pollutants are discussed:
inhalable dust, respirable dust, and total dust

9. Is there any information related to controls or mitigation of air emissions?
Yes

10. Did the data source contain useful air information (emission factors or enough data to develop emission factors)? If "no", indicate why was it not useful (e.g., vague, no pollutant information) and a very brief summary of what it did have (e.g., "contained only seasonal flux measurements of pollutant concentrations in the surrounding air around a swine house, but no parameter data to develop emission factors). If the answer is "no", stop the review with this question. If the answer is "yes", continue with the remaining questions.
Yes

For each animal type discussed in the article answer the following questions (i.e., use a separate summary sheet for each animal type):

11. What animal type is addressed in the remainder of this summary sheet?
Swine

12. Number/Size/Age of animals present
not provided

13. What general CAFO operations are covered by the data source?: (Feeding, Confinement, Waste Conveyance, Storage, Treatment, or End Use):
feeding and confinement

14. What specific CAFO operation is discussed? (e.g., types of confinement area, etc., see below for detailed classification):
details not provided

15. What are the physical parameters of the specific CAFO operation? (Volume, surface area, ventilation rate, etc)
details not provided

16. What pollutants are discussed?:
inhalable dust, respirable dust, and total dust

17. Are emissions data available? If yes, are they emission factors or total emissions?:
Concentrations

18. Are activity factors provided? What are the units? (e.g., tons of manure, 1000 head of cattle, tons of beef production, etc.):

19. What test methods/measurement activities were used to gather emissions information? Include description of whether measurement activities were made at one point in time or over a series of days/hours. Also, if possible, describe sample collection technique, sample analysis methods, and any QA/QC procedures performed (e.g. equipment blanks, trip blanks, etc.):
dust concentrations are typically measured with gravimetric systems

20. What units are emissions data in?:
mg/m^3

21. Provide pollutant specific emission data for the animal/CAFO combination (e.g., total emissions, emission factors, emissions per activity unit, etc.) NOTE: IT MAY BE MOST CONVENIENT TO CREATE A SPREADSHEET FOR THIS DATA. PLEASE INDICATE THE FILENAME IF A SEPARATE SPREADSHEET CONTAINS THE EMISSION FACTOR DATA FROM THIS REFERENCE:
sum508sy.wpd

22. What were the climatic conditions/season when tests were conducted? (e.g., temperature, relative humidity, wind speed, time of day, month, etc) Were data presented for different seasons?: *Season is provided in some of the referenced studies.*

23. What information is known about the feeds?:
None

24. Additional manure information, including speciation and type of manure handled (liquid: <

3% total solids, slurry: 3-8% total solids, solid: >8% total solids)
none

25. Additional information:
This cites several studies that have concentrations. See below.

26. Additional references of interest in the data source:
Nonnemann, et al, 1999
Takai, et al, 1998, 1999
Guingand, 1999

27. Data concerns or caveats:
This article merely summarizes data gathered from other sources.

<u>Some specific CAFO operations</u>

- Confinement facility includes uncovered feedlot, free-stall barn, etc. It also includes type of ventilation such as natural or mechanical, and method of manure collection such as deep pit or pull plug pit or flushing.
- Waste Conveyance systems are usually open or closed
- Treatment systems include anaerobic lagoon, anaerobic digester, aerobic treatment, composting, etc.
- Waste storage units include closed tank, storage pond, open tank, storage shed, or open stacking
- End use includes surface spreading which can be solid or liquid manure spreading or irrigation with application rates and concentrations

AFO Project Data Summary Sheet

1. Data Source ID: *388* Reviewer Initials: *JMM*

2. Data Source (i.e., book title, journal title, proceedings title, volume, issue, page #):

The reference has "Abstract" listed on, but no direct reference to any proceedings for journals from which it originated.

3. Article Title:

Field Measurement of Air Pollutants Near Swine Confined Animal Feeding Operations using UV DOAS and FTIR.

4. Author:

Cary Secrest

5. Date of report/article:

Measurements on which study was based occurred in September, 1999 and March, 2000.

6. Location of study (city, State, region):

Missouri and Maryland

7. Animal types discussed: *Swine*

8. What pollutants are discussed: *Ammonia*

9. Is there any information related to controls or mitigation of air emissions?

No

10. Did the data source contain useful air information (emission factors or enough data to develop emission factors)? If "no", indicate why was it not useful (e.g., vague, no pollutant information) and a very brief summary of what it did have (e.g., "contained only seasonal flux measurements of pollutant concentrations in the surrounding air around a swine house, but no parameter data to develop emission factors). If the answer is "no", stop the review with this question. If the answer is "yes", continue with the remaining questions.

Yes, ammonia emission factors for swine confinement facilities.

For each animal type discussed in the article answer the following questions (i.e., use a separate summary sheet for each animal type)

11. What animal type is addressed in the remainder of this summary sheet?

Swine.

12. Number/Size/Age of animals present

The study took measurements at two CAFO sites:
CAFO site #1 consisted of 64 barns containing 60,000 hogs in total.
CAFO site #2 consisted of 2 barns containing 2,000 finishing hogs.

Emission factors are only provided for CAFO site #2.

13. What general CAFO operations are covered by the data source?: (Feeding, Confinement, Waste Conveyance, Storage, Treatment, or End Use):

Confinement.

14. What specific CAFO operation is discussed? (e.g., types of confinement area, etc., see below for detailed classification):

Two-barn hog complex at CAFO site#2.

15. What are the physical parameters of the specific CAFO operation? (Volume, surface area, ventilation rate, etc)

Not reported.

16. What pollutants are discussed?:

Ammonia.

17. Are emissions data available? If yes, are they emission factors or total emissions?:

Emission factors are summarized from secondary references and emissions per day are provided based on the measurements taken at CAFO site #2.

18. Are activity factors provided? What are the units? (e.g., tons of manure, 1000 head of cattle, tons of beef production, etc.):

For the emission factors from the secondary data references the activity data is in units of # of hogs per year.

19. What test methods/measurement activities were used to gather emissions information? Include description of whether measurement activities were made at one point in time or over a series of days/hours:

An ultra violet differential optical absorption spectrometer (UV DOAS) was used for two weeks of continuous measurements approximately 400 meters from the barn complex in Cafo site #2.

20. What units are emissions data in?:

kgs and tons per day.

21. Provide pollutant specific emission data for the animal/CAFO combination (e.g., total emissions, emission factors, emissions per activity unit, etc.):

See companion spreadsheet "sum388sy.xls" for emission factor and emission data.

22. What were the climatic conditions/season when tests were conducted? (e.g., temperature, relative humidity, wind speed, time of day, month, etc):

Tests conducted during March of 2000 at CAFO site #2.

23. What information is known about the feeds?:

None reported.

24. Additional manure information, including speciation and type of manure handled (liquid: < 3% total solids, slurry: 3-8% total solids, solid: >8% total solids)

None reported.

25. Additional information:

26. Additional references of interest in the data source:

Secondary data reference for factors for swine operations in North Carolina:

Harris, D.B., Thompson, E.L., Jr. "Evaluation of Ammonia Emissions from Swine Waste Operations in North Carolina," U.S. Environmental Protection Agency, presented at the Air and Waste Management Association, New Orleans, LA. December 8-10, 1998.

27. Data concerns or caveats:

Emissions data from measurements presented only for one site that may not be represented of

model farm CAFO.

Some specific CAFO operations

- Confinement facility includes uncovered feedlot, free-stall barn, etc. It also includes type of ventilation such as natural or mechanical, and method of manure collection such as deep pit or pull plug pit or flushing.
- Waste Conveyance systems are usually open or closed
- Treatment systems include anaerobic lagoon, anaerobic digester, aerobic treatment, composting, etc.
- Waste storage units include closed tank, storage pond, open tank, storage shed, or open stacking
- End use includes surface spreading which can be solid or liquid manure spreading or irrigation with application rates and concentrations

AFO Project Data Summary Sheet

1. Data Source ID: *385* Reviewer Initials: *JMM*

2. Data Source (i.e., book title, journal title, proceedings title, volume, issue, page #):

Report sheet provided by Cary Secrest of EPA/ORE to ERG on 10/18/00

3. Article Title:

Hydrogen Sulfide from Lagoons and Barns

4. Author:

Cary Secrest

5. Date of report/article:

October 18, 2000

6. Location of study (city, State, region):

Indiana and Illinois

7. Animal types discussed: *Swine*

8. What pollutants are discussed: *Hydrogen sulfide*

9. Is there any information related to controls or mitigation of air emissions?

No

10. Did the data source contain useful air information (emission factors or enough data to develop emission factors)? If "no", indicate why was it not useful (e.g., vague, no pollutant information) and a very brief summary of what it did have (e.g., "contained only seasonal flux measurements of pollutant concentrations in the surrounding air around a swine house, but no parameter data to develop emission factors). If the answer is "no", stop the review with this question. If the answer is "yes", continue with the remaining questions.

Yes. There are emission factors provided for hydrogen sulfide emissions from swine lagoons.

For each animal type discussed in the article answer the following questions (i.e., use a separate summary sheet for each animal type)

11. What animal type is addressed in the remainder of this summary sheet?

Swine

12. Number/Size/Age of animals present

Finishing pigs (facilities range from 67,868 to 255,730 pigs for year 1998-1999).

13. What general CAFO operations are covered by the data source?: (Feeding, Confinement, Waste Conveyance, Storage, Treatment, or End Use):

Storage/treatment

14. What specific CAFO operation is discussed? (e.g., types of confinement area, etc., see below for detailed classification):

Anaerobic lagoon.

15. What are the physical parameters of the specific CAFO operation? (Volume, surface area, ventilation rate, etc)

See the companion spreadsheet "sum385sy.xls" for lagoon surface area for each facility.

16. What pollutants are discussed?:

Hydrogen sulfide.

17. Are emissions data available? If yes, are they emission factors or total emissions?:

Emission factors and total annual emissions for 7 finishing facilities.

18. Are activity factors provided? What are the units? (e.g., tons of manure, 1000 head of cattle, tons of beef production, etc.):

Yes–Number of pigs and lagoon area.

19. What test methods/measurement activities were used to gather emissions information? Include description of whether measurement activities were made at one point in time or over a series of days/hours:

The report sheets summarizes other studies where emissions were measured and upon which the emission factors are based.

20. What units are emissions data in?:

Tons of hydrogen sulfide emitted per year from lagoons at each facility.

21. Provide pollutant specific emission data for the animal/CAFO combination (e.g., total emissions, emission factors, emissions per activity unit, etc.):

See companion spreadsheet "sum385sy.xls" for emission factors and lagoon acreage.

22. What were the climatic conditions/season when tests were conducted? (e.g., temperature, relative humidity, wind speed, time of day, month, etc):

Not reported.

23. What information is known about the feeds?:

None provided.

24. Additional manure information, including speciation and type of manure handled (liquid: < 3% total solids, slurry: 3-8% total solids, solid: >8% total solids)

Not reported.

25. Additional information:

26. Additional references of interest in the data source:

27. Data concerns or caveats:

The emission factor reported from TRC reference made be low due to an incomplete estimate of the amount of excreted sulfur. If these data are used, may want to exclude the TRC emission factor from any average calculation.

<u>Some specific CAFO operations</u>

- Confinement facility includes uncovered feedlot, free-stall barn, etc. It also includes type of ventilation such as natural or mechanical, and method of manure collection such as deep pit or pull plug pit or flushing.
- Waste Conveyance systems are usually open or closed
- Treatment systems include anaerobic lagoon, anaerobic digester, aerobic treatment, composting, etc.
- Waste storage units include closed tank, storage pond, open tank, storage shed, or open stacking
- End use includes surface spreading which can be solid or liquid manure spreading or irrigation with application rates and concentrations

AFO Project Data Summary Sheet

1. Data Source ID:*36* Reviewer Initials: *KHH*

2. Data Source (i.e., book title, journal title, proceedings title, volume, issue, page #):
Journal of Agricultural Engineering Research (1998) 70, 59-77

3. Article Title:
Concentrations and Emissions of Airborne Dust in Livestock Buildings in Northern Europe

4. Author:
H. Takai et al

5. Date of report/article:
accepted December, 1997, published 1998

6. Location of study (city, State, region):
England, The Netherlands, Denmark, Germany

7. Animal types discussed:
Beef cattle, dairy cattle, swine (sows, weaners and fatteners), broiler, layer

8. What pollutants are discussed:
dust (PM)

9. Is there any information related to controls or mitigation of air emissions?
No - methods of dust reduction are discussed, but no specific data is given

10. Did the data source contain useful air information (emission factors or enough data to develop emission factors)? If "no", indicate why was it not useful (e.g., vague, no pollutant information) and a very brief summary of what it did have (e.g., "contained only seasonal flux measurements of pollutant concentrations in the surrounding air around a swine house, but no parameter data to develop emission factors). If the answer is "no", stop the review with this question. If the answer is "yes", continue with the remaining questions.
Yes - This study covers dust emissions from cattle, swine and poultry buildings taking into account several variables including country, housing type, season and sampling period.

For each animal type discussed in the article answer the following questions (i.e., use a separate summary sheet for each animal type)

11. What animal type is addressed in the remainder of this summary sheet?
Swine

12. Number/Size/Age of animals present

Not given

13. What general CAFO operations are covered by the data source?: (Feeding, Confinement, Waste Conveyance, Storage, Treatment, or End Use):

Confinement

14. What specific CAFO operation is discussed? (e.g., types of confinement area, etc., see below for detailed classification):

Sows on litter, Sows on slats, weaners on slats, fatteners on litter, fatteners on slats

15. What are the physical parameters of the specific CAFO operation? (Volume, surface area, ventilation rate, etc)

Country, housing type, season, sampling period

16. What pollutants are discussed?:

Dust (PM)

17. Are emissions data available? If yes, are they emission factors or total emissions?:

Yes - dust emission rates are given

18. Are activity factors provided? What are the units? (e.g., tons of manure, 1000 head of cattle, tons of beef production, etc.):

No - but emissions are given on a per animal, per livestock unit (500 kg), and per hpu (heat production unit) basis

19. What test methods/measurement activities were used to gather emissions information? Include description of whether measurement activities were made at one point in time or over a series of days/hours:

IOM dust samplers were used to collect the inhalable dust fraction. The respirable dust fraction was sampled using cyclone dust samplers. The samplers enabled simultaneous sampling from seven different sampling locations. Three sampling points were right above the animal's heads, three were at human head level, and one was close to a ventilation exhaust.

Sampling was done during both nighttime and daytime hours over a period of time. Specifics on the sampling method are described in another source:

Philips et al The development of robust methods for measuring concentrations and emission rates of gaseous and particulate air pollution in livestock buildings. Journal of Agricultural Engineering Research, 1998, 70, 11-24.

20. What units are emissions data in?:

mg/h/animal, mg/h/livestock unit, mg/h/hpu

21. Provide pollutant specific emission data for the animal/CAFO combination (e.g., total emissions, emission factors, emissions per activity unit, etc.):

see attached spreadsheet sumsy.xls

22. What were the climatic conditions/season when tests were conducted? (e.g., temperature, relative humidity, wind speed, time of day, month, etc):

time of day and time of year were variables

23. What information is known about the feeds?:

none

24. Additional manure information, including speciation and type of manure handled (liquid: < 3% total solids, slurry: 3-8% total solids, solid: >8% total solids)

none

25. Additional information:

The emissions rate in this article are for inhalable and respirable dust. Inhalable dust is defined by European Standard EN 481. Respirable dust is defined by the Johannesburg Convention.

26. Additional references of interest in the data source:

none - except reference listed above might be helpful

27. Data concerns or caveats:

<u>Some specific CAFO operations</u>

- Confinement facility includes uncovered feedlot, free-stall barn, etc. It also includes type of ventilation such as natural or mechanical, and method of manure collection such as deep pit or pull plug pit or flushing.
- Waste Conveyance systems are usually open or closed
- Treatment systems include anaerobic lagoon, anaerobic digester, aerobic treatment, composting, etc.
- Waste storage units include closed tank, storage pond, open tank, storage shed, or open stacking
- End use includes surface spreading which can be solid or liquid manure spreading or irrigation with application rates and concentrations

AFO Project Data Summary Sheet

1. Data Source ID:*59* Reviewer Initials:*RB*

2. Data Source (i.e., book title, journal title, proceedings title, volume, issue, page #): *Farm Animals and the Envrionment (eds. C. Pludips, D. Piggens) CAB International, Wallingford, UK.*

3. Article Title: *Gaseous Pollutants Produced by Farm Animal Enterprises.*

4. Author: *S. Tamminga*

5. Date of report/article: *1992*

6. Location of study (city, State, region): *Review of Available Data*

7. Animal types discussed: *Beef Dairy Veal Swine Poultry-- broiler, layer*

8. What pollutants are discussed: *Methane and Ammonia*

9. Is there any information related to controls or mitigation of air emissions? *There is some qualitative discussion of management practices that may help reduce emissions.*

10. Did the data source contain useful air information (emission factors or enough data to develop emission factors)? If "no", indicate why was it not useful (e.g., vague, no pollutant information) and a very brief summary of what it did have (e.g., "contained only seasonal flux measurements of pollutant concentrations in the surrounding air around a swine house, but no parameter data to develop emission factors). If the answer is "no", stop the review with this question. If the answer is "yes", continue with the remaining questions.

Yes

For each animal type discussed in the article answer the following questions (i.e., use a separate summary sheet for each animal type)

11. What animal type is addressed in the remainder of this summary sheet? *Poultry - laying hens and broilers*

12. Number/Size/Age of animals present *Unknown, though average body weight is provided (Laying hens 5 kg and broilers 0.5 kg).*

13. What general CAFO operations are covered by the data source?: (Feeding, Confinement, Waste Conveyance, Storage, Treatment, or End Use): *Unknown, though it appears the emisison factors are for animal confinement and possibly waste storage*

14. What specific CAFO operation is discussed? (e.g., types of confinement area, etc., see below

for detailed classification):*Unknown*

15. What are the physical parameters of the specific CAFO operation? (Volume, surface area, ventilation rate, etc) *Not provided*

16. What pollutants are discussed?: *Ammonia*

17. Are emissions data available? If yes, are they emission factors or total emissions?: *Yes, as emission factors.*

18. Are activity factors provided? What are the units? (e.g., tons of manure, 1000 head of cattle, tons of beef production, etc.): *Animals per year*

19. What test methods/measurement activities were used to gather emissions information? Include description of whether measurement activities were made at one point in time or over a series of days/hours: *Unknown*

20. What units are emissions data in?: *Kg/Animals per year*

21. Provide pollutant specific emission data for the animal/CAFO combination (e.g., total emissions, emission factors, emissions per activity unit, etc.):

Laying hens *0.2 kg of ammonia per animal per year*

Broilers *0.1kg of ammonia per animal per year*

22. What were the climatic conditions/season when tests were conducted? (e.g., temperature, relative humidity, wind speed, time of day, month, etc): *Not provided*

23. What information is known about the feeds?: *Some typical feed information is provided.*

24. Additional manure information, including speciation and type of manure handled (liquid: < 3% total solids, slurry: 3-8% total solids, solid: >8% total solids) *typical waste profiles provided including data on dry matter, organic/dry matter ratios, nitrogen to organic matter ratios and ammonia-N to total N* ratios.

25. Additional information:

26. Additional references of interest in the data source:

Hartung J. (1988) Tentative Calculations of Gaseous Emissions from Pig Houses by Way of the Exhaust Air. In Nielsen, V.C. Voorburg, J.H. and L'Hermite, P. (eds) Volatile Emissions from Livestock Farming and Sewage Operations. Elsevier Applied Science, London, pp. 54-58

Klarenbeek, J.V. and Bruins, M.A. (1988) Ammonia Emissions from Livestock Buildings and

Slurry Spreading in the Netherlands. In: Nielsen, V.C. Voorburg, J.H. and L'Hermite, P. (eds) Volatile Emissions from Livestock Farming and Sewage Operations. Elsevier Applied Science, London, pp. 73-84.

27. Data concerns or caveats:

<u>Some specific CAFO operations</u>

- Confinement facility includes uncovered feedlot, free-stall barn, etc. It also includes type of ventilation such natural or mechanical, and method of manure collection such as deep pit or pull plug pit or flushing.
- Waste Conveyance systems are usually open or closed
- Treatment systems include anaerobic lagoon, anaerobic digester, aerobic treatment, composting, etc.
- Waste storage units include closed tank, storage pond, open tank, storage shed, or open stacking
- End use includes surface spreading which can be solid or liquid manure spreading or irrigation with application rates and concentrations

AFO Project Data Summary Sheet

1. Data Source ID: *290* Reviewer Initials: *JMH*

2. Data Source (i.e., book title, journal title, proceedings title, volume, issue, page #):
USDA-AAQTF Meeting, Washington, DC
3. Article Title:
Air Quality Research & Technology Transfer Programs for Concentrated Animal Feeding Operations
4. Author:
USDA Agricultural Air Quality Task Force (AAQTF) Confined Livestock Air Quality Subcommittee, John M. Sweeten, Chair
5. Date of report/article:
July 18-19, 2000
6. Location of study (city, State, region):
Multiple U.S. locations
7. Animal types discussed: **Beef** **Dairy** Veal **Swine** **Poultry**-Broiler Layer Turkey

8. What pollutants are discussed:
Ammonia, TSP, PM, greenhouse gases (GHG), and Odor
9. Is there any information related to controls or mitigation of air emissions?
Yes
10. Did the data source contain useful air information (emission factors or enough data to develop emission factors)? If "no", indicate why was it not useful (e.g., vague, no pollutant information) and a very brief summary of what it did have (e.g., "contained only seasonal flux measurements of pollutant concentrations in the surrounding air around a swine house, but no parameter data to develop emission factors). If the answer is "no", stop the review with this question. If the answer is "yes", continue with the remaining questions.
Yes.

For each animal type discussed in the article answer the following questions (i.e., use a separate summary sheet for each animal type)

11. What animal type is addressed in the remainder of this summary sheet?
Beef Cattle
12. Number/Size/Age of animals present
Varies, article presents summaries of results from a variety of studies. See SUM290.XLS for detailed reporting of emission factors and given conditions.
13. What general CAFO operations are covered by the data source?: (Feeding, Confinement, Waste Conveyance, Storage, Treatment, or End Use): *Feeding*

14. What specific CAFO operation is discussed? (e.g., types of confinement area, etc., see below for detailed classification): *Cattle feedlots*

15. What are the physical parameters of the specific CAFO operation? (Volume, surface area,

ventilation rate, etc) *Various, depends on study presented. Not a great amount of detail given in this article on physical parameters.*

16. What pollutants are discussed?:
NH_3, H_2S, TSP

17. Are emissions data available? If yes, are they emission factors or total emissions?:
Yes, mix of emission factors and concentrations
18. Are activity factors provided? What are the units? (e.g., tons of manure, 1000 head of cattle, tons of beef production, etc.): *Yes, various. See SUM290.xls for details on each specific activity factor associated with each emission factor.*

19. What test methods/measurement activities were used to gather emissions information? Include description of whether measurement activities were made at one point in time or over a series of days/hours: *Unknown for the most part. Article summarizes various reports, but does not go into detail about the testing methods or techniques.*

20. What units are emissions data in?:
Various units, depending on data source being summarized.

21. Provide pollutant specific emission data for the animal/CAFO combination (e.g., total emissions, emission factors, emissions per activity unit, etc.):
See SUM290.xls.
22. What were the climatic conditions/season when tests were conducted? (e.g., temperature, relative humidity, wind speed, time of day, month, etc):
Not given in all cases, see SUM290.xls.
23. What information is known about the feeds?:
N/A
24. Additional manure information, including speciation and type of manure handled (liquid: < 3% total solids, slurry: 3-8% total solids, solid: >8% total solids)
N/A
25. Additional information: *Gives some arguments as to why AP-42 EFs are not adequate for emissions estimation for CAFOs. Provides alternate emission factors based on more recent studies. Also gives summaries of various control options available.*
26. Additional references of interest in the data source:
The reference list is extensive, it would be worthwhile to check on the articles which were used to obtain the emission factors from. We probably have some in our collection already.
27. Data concerns or caveats: *The article more or less summarizes various other articles, so not many details on how the emission factors were developed can be found in this reference.*

<u>Some specific CAFO operations</u>

- Confinement facility includes uncovered feedlot, free-stall barn, etc. It also includes type of ventilation such as natural or mechanical, and method of manure collection such as deep pit or pull plug pit or flushing.
- Waste Conveyance systems are usually open or closed

- Treatment systems include anaerobic lagoon, anaerobic digester, aerobic treatment, composting, etc.
- Waste storage units include closed tank, storage pond, open tank, storage shed, or open stacking

AFO Project Data Summary Sheet

1. Data Source ID: 90

2. Data Source (i.e., book title, journal title, proceedings title, volume, issue, page #):
Odor and NH_3 Emissions from Livestock Farming
3. Article Title:
Ammonia Emission from two Poultry Manure Drying Systems
4. Author:
L. Valli, S. Piccinini, and G. Bonazzi
5. Date of report/article:
1991
6. Location of study (city, State, region):
Italy
7. Did the data source contain useful air information? If not, why was it not useful, e.g., vague, no pollutant information, etc.:
Yes
For each combination of animal and CAFO operation answer the following questions (i.e., use a separate summary sheet for each animal-CAFO combination)

8. Animal: Poultry-- layer

9. Number/Size/Age of animals present
50,000 laying hens
10. What general CAFO operations are covered by the data source?: (Feeding, Confinement, Waste Conveyance, Storage, Treatment, or End Use):
Storage and drying of poultry manure
11. What specific CAFO operation is discussed? (e.g., types of confinement area, etc., see below for detailed classification):

12. What are the physical parameters of the specific CAFO operation? (Volume, surface area, ventilation rate, etc)
12 m wide and 120 m long layer house.
50,000 hens arranged in 5 rows of 5 tier high cages above a deep pit.
The pit was ventilated using 15 extractor fans (30,000 m^3/hour ventilation rate)
13. What pollutants are discussed?:
Ammonia emissions
14. Are emissions data available? If yes, are they emission factors or total emissions?:
Emission factors and total emissions
15. Are activity factors provided? What are the units? (e.g., tons of manure, 1000 head of cattle, tons of beef production, etc.):
No information provided
16. What test methods/measurement activities were used to gather emissions information? Include description of whether measurement activities were made at one point in time or over a series of days/hours:
The air samples were taken directly from the mouth of two of the active ventilators.

The concentration of ammonia in the air was determined by bubbling the air sample through a sulfuric acid trap and subsequent colorimetric analysis with Nessler reagent.

17. What units are emissions data in?:

Emission Factors in g/hen-day

Total Emissions in kg

18. Provide pollutant specific emission data for the animal/CAFO combination (e.g., total emissions, emissions per activity unit, etc.):

Ammonia emissions from a ventilated deep pit poultry house:
Shows the concentration of ammonia in the air extracted with ventilation over a 5-month storage period.

Sample Date	Specific Ventilation (m^3/hen-h)	NH_3-N Air Conc. (mg/m^3)	NH_3-N Total Emissions (kg)	NH_3-N Spec. Emiss. (g/hen-day)
11/22	4.87	2.39	516.67	0.28
12/07	2.75	2.75	136.04	0.18
01/05	2.95	2.22	227.59	0.16
01/15	2.54	1.72	52.47	0.10
01/30	2.43	3.77	164.8	0.22
02/13	2.58	2.74	118.96	0.17
02/28	3.12	1.55	86.94	0.12
03/13	3.72	1.45	84.1	0.13
Average				0.17

19. What were the climatic conditions/season when tests were conducted? (e.g., temperature, relative humidity, wind speed, time of day, month, etc):

No data provided.

20. What information is known about the feeds?:

No data provided.

21. Additional manure information, including speciation and type of manure handled (liquid: < 3% total solids, slurry: 3-8% total solids, solid: >8% total solids)

Poultry manure at the start and end of the 5-month period:

Parameter	Heap A		Heap C		Heap E	
	Start	End	Start	End	Start	End
Total Solids (% w.b.)	28.9	50.9	27.1	57.1	29.1	71.3
Volatile Solids (% TS)	65.0	45.0	66.9	48.2	63.6	62.4

Parameter	Heap A		Heap C		Heap E	
	Start	End	Start	End	Start	End
Total Nitrogen (% TS)	8.1	3.5	8.2	3.4	7.3	4.6
Ammonia Nitrogen (% TS)	4.7	1.2	6.6	0.8	4.7	0.6
Total Phosphorus (% TS)	3.3	2.8	3.3	2.5	3.2	2.0

22. Additional information:

The article also provides data on two composting facilities. Manure from the layer houses is extracted daily and transferred to a composting facility, which consists of a rectangular pit (60 m long) enclosed in a hothouse shed. The manure is stirred once daily using mechanical stirring machine. The fresh manure is mixed with chopped straw at a ratio of 7:1 by weight. A ventilator with a max. air flow rate of 30,000 m3/hour extracts air from the shed. NH3-N specific emissions were 1.628 g/bird-day and 0.951 g/bird-day, respectively, for two separate tests.

23. Additional references of interest in the data source:

None

24. Data concerns or caveats:

Since the data is based on emissions from Italian poultry farms, it may not be directly applicable to U.S. poultry farms.

<u>Some specific CAFO operations</u>

- Confinement facility includes uncovered feedlot, free-stall barn, etc. It also includes type of ventilation such as natural or mechanical, and method of manure collection such as deep pit or pull plug pit or flushing.
- Waste Conveyance systems are usually open or closed
- Treatment systems include anaerobic lagoon, anaerobic digester, aerobic treatment, composting, etc.
- Waste storage units include closed tank, storage pond, open tank, storage shed, or open stacking
- End use includes surface spreading which can be solid or liquid manure spreading or irrigation with application rates and concentrations

AFO Project Data Summary Sheet

1. Data Source ID: *143* Reviewer Initials: *BS*

2. Data Source (i.e., book title, journal title, proceedings title, volume, issue, page #):
Atmospheric Environment, v.32, 315-316
3. Article Title:
Estimating Ammonia Emission Factors in Europe: Summary of the work of the UNECE *ammonia expert panel*
4. Author:
Van der Hoek, K.W.
5. Date of report/article:
1998
6. Location of study (city, State, region):
Europe
7. Animal types discussed:
Beef Dairy Swine Broiler Layer
8. What pollutants are discussed:
Ammonia
9. Is there any information related to controls or mitigation of air emissions?
No
10. Did the data source contain useful air information (emission factors or enough data to develop emission factors)? If "no", indicate why was it not useful (e.g., vague, no pollutant information) and a very brief summary of what it did have (e.g., "contained only seasonal flux measurements of pollutant concentrations in the surrounding air around a swine house, but no parameter data to develop emission factors). If the answer is "no", stop the review with this question. If the answer is "yes", continue with the remaining questions.
Yes. Article lists emission factors; they are not specific to various CAFO parameters.

For each animal type discussed in the article answer the following questions (i.e., use a separate summary sheet for each animal type)

(Questions 11-27 can not be answered from the information provided in the article. The spreadsheet associated with the article contains the only potentially useful information)

11. What animal type is addressed in the remainder of this summary sheet?

12. Number/Size/Age of animals present

13. What general CAFO operations are covered by the data source?: (Feeding, Confinement, Waste Conveyance, Storage, Treatment, or End Use):

14. What specific CAFO operation is discussed? (e.g., types of confinement area, etc., see below for detailed classification):

15. What are the physical parameters of the specific CAFO operation? (Volume, surface area, ventilation rate, etc)

16. What pollutants are discussed?:

17. Are emissions data available? If yes, are they emission factors or total emissions?:

18. Are activity factors provided? What are the units? (e.g., tons of manure, 1000 head of cattle, tons of beef production, etc.):

19. What test methods/measurement activities were used to gather emissions information? Include description of whether measurement activities were made at one point in time or over a series of days/hours:

20. What units are emissions data in?:

21. Provide pollutant specific emission data for the animal/CAFO combination (e.g., total emissions, emission factors, emissions per activity unit, etc.):

22. What were the climatic conditions/season when tests were conducted? (e.g., temperature, relative humidity, wind speed, time of day, month, etc):

23. What information is known about the feeds?:

24. Additional manure information, including speciation and type of manure handled (liquid: < 3% total solids, slurry: 3-8% total solids, solid: >8% total solids)

25. Additional information:

26. Additional references of interest in the data source:

27. Data concerns or caveats:

<u>Some specific CAFO operations</u>

- Confinement facility includes uncovered feedlot, free-stall barn, etc. It also includes type of ventilation such as natural or mechanical, and method of manure collection such as deep pit or pull plug pit or flushing.
- Waste Conveyance systems are usually open or closed
- Treatment systems include anaerobic lagoon, anaerobic digester, aerobic treatment, composting, etc.
- Waste storage units include closed tank, storage pond, open tank, storage shed, or open stacking
- End use includes surface spreading which can be solid or liquid manure spreading or irrigation with application rates and concentrations

AFO Project Data Summary Sheet

1. Data Source ID: *291* Reviewer Initials: *JMH*

2. Data Source (i.e., book title, journal title, proceedings title, volume, issue, page #):
Final Report to EPA
3. Article Title:
Development and Selection of Ammonia Emission Factors
4. Author: *USEPA by Battye, Battye, Overcash, and Fudge*

5. Date of report/article: *August 1994*

6. Location of study (city, State, region): *Various*

7. Animal types discussed: **Beef Dairy** Veal **Swine Poultry-Broiler Layer Turkey**

8. What pollutants are discussed: NH_3

9. Is there any information related to controls or mitigation of air emissions?
No
10. Did the data source contain useful air information (emission factors or enough data to develop emission factors)? If "no", indicate why was it not useful (e.g., vague, no pollutant information) and a very brief summary of what it did have (e.g., "contained only seasonal flux measurements of pollutant concentrations in the surrounding air around a swine house, but no parameter data to develop emission factors). If the answer is "no", stop the review with this question. If the answer is "yes", continue with the remaining questions.
YES

For each animal type discussed in the article answer the following questions (i.e., use a separate summary sheet for each animal type)

11. What animal type is addressed in the remainder of this summary sheet?
Beef
12. Number/Size/Age of animals present
Various categories of age and weights

13. What general CAFO operations are covered by the data source?: (Feeding, Confinement, Waste Conveyance, Storage, Treatment, or End Use):
Confinement, End Use
14. What specific CAFO operation is discussed? (e.g., types of confinement area, etc., see below for detailed classification): *Not specifically reported.*

15. What are the physical parameters of the specific CAFO operation? (Volume, surface area, ventilation rate, etc) *Not given.*

16. What pollutants are discussed?: *NH_3*

17. Are emissions data available? If yes, are they emission factors or total emissions?:
Yes, emission factors.
18. Are activity factors provided? What are the units? (e.g., tons of manure, 1000 head of cattle, tons of beef production, etc.): *Per animal per year*

19. What test methods/measurement activities were used to gather emissions information? Include description of whether measurement activities were made at one point in time or over a series of days/hours:
Not given, article simply reports and compares findings from other studies.
20. What units are emissions data in?:
kg NH_3/animal/yr
21. Provide pollutant specific emission data for the animal/CAFO combination (e.g., total emissions, emission factors, emissions per activity unit, etc.):
See SUM291.xls
22. What were the climatic conditions/season when tests were conducted? (e.g., temperature, relative humidity, wind speed, time of day, month, etc):
Not given
23. What information is known about the feeds?:
N/A
24. Additional manure information, including speciation and type of manure handled (liquid: < 3% total solids, slurry: 3-8% total solids, solid: >8% total solids)
N/A
25. Additional information:
N/A
26. Additional references of interest in the data source:
N/A
27. Data concerns or caveats:
An email message from Asman to EPA expresses concern over some data conversion performed by the Battyes to Asmans data for pigs and sheep. However, the data tables in Section 2 of this report (and the recommended factors presented in Table 2-9) use the same factors as those from Table 2-2, which supposedly is Asman's data. Not entirely sure what the discrepancy referred to in the email is.

<u>Some specific CAFO operations</u>

- Confinement facility includes uncovered feedlot, free-stall barn, etc. It also includes type of ventilation such as natural or mechanical, and method of manure collection such as deep pit or pull plug pit or flushing.
- Waste Conveyance systems are usually open or closed
- Treatment systems include anaerobic lagoon, anaerobic digester, aerobic treatment, composting, etc.
- Waste storage units include closed tank, storage pond, open tank, storage shed, or open stacking
- End use includes surface spreading which can be solid or liquid manure spreading or irrigation with application rates and concentrations

AFO Project Data Summary Sheet

1. Data Source ID: Reviewer Initials: *AAB*
   339
2. Data Source (i.e., book title, journal title, proceedings title, volume, issue, page #):
   Journal of Soil Science, 1991, 42, 369-380
3. Article Title:
   Use of $CaCl_2$ to Decrease Ammonia Volatilization After Application of Fresh and Anaerobic Chicken Slurry to Soil
4. Author:
   E. Witter
5. Date of report/article:
   1991
6. Location of study (city, State, region):
   Sweden
7. Animal types discussed: Poultry--layer

8. What pollutants are discussed:
   Ammonia
9. Is there any information related to controls or mitigation of air emissions?
   Yes - application of $CaCl_2$ to chicken manure to reduce ammonia emissions when manure is applied to farm land.
10. Did the data source contain useful air information (emission factors or enough data to develop emission factors)? If "no", indicate why was it not useful (e.g., vague, no pollutant information) and a very brief summary of what it did have (e.g., "contained only seasonal flux measurements of pollutant concentrations in the surrounding air around a swine house, but no parameter data to develop emission factors). If the answer is "no", stop the review with this question. If the answer is "yes", continue with the remaining questions.
   Yes

For each animal type discussed in the article answer the following questions (i.e., use a separate summary sheet for each animal type)

11. What animal type is addressed in the remainder of this summary sheet?
    Poultry - Layers
12. Number/Size/Age of animals present
    Unknown
13. What general CAFO operations are covered by the data source?: (Feeding, Confinement, Waste Conveyance, Storage, Treatment, or End Use):
    Land Application and treatment
14. What specific CAFO operation is discussed? (e.g., types of confinement area, etc., see below for detailed classification):
    This paper describes a study designed to determine the effect of $CaCl_2$ in controlling ammonia volatilization from aerobic manure (a slurry with 15% solids content) and anaerobic manure (10% solids content). Calcium chloride was added at a rate of 36 mg

Ca/g slurry (dry weight). Fresh manure from laying hens was used for the experiment. The manure was dried at 60 deg. C for 48 days before being ground to pass a 2mm mesh. The manure consisted of dropping only. Anaerobic manure was prepared by adding water to the fresh manure to obtain a 75% moisture content (fresh weight basis). The samples were mixed with soil (a silty clay, pH 6.85). In all incubation experiments 3cm3of the fresh chicken slurry (15% solids) or anaerobic slurry (10% solids) was evenly pipetted into the soil surface. This corresponds to a field application of 34 m3 slurry/ha. All incubation studies were carried out with three replicates in each treatment and were continued for a period of 14 days.

15. What are the physical parameters of the specific CAFO operation? (Volume, surface area, ventilation rate, etc)

None

16. What pollutants are discussed?:

Ammonia and carbon dioxide

17. Are emissions data available? If yes, are they emission factors or total emissions?:

yes - emission factors

18. Are activity factors provided? What are the units? (e.g., tons of manure, 1000 head of cattle, tons of beef production, etc.):

No

19. What test methods/measurement activities were used to gather emissions information? Include description of whether measurement activities were made at one point in time or over a series of days/hours:

Ammonia was measured using an aeration manifold placed in a constant temperature room at 25 deg. C. Ammonia-free air was blown over the soil surface. The exhaust air was passed through a 20 cm3 0.2 M sulfuric acid trap. The amount of ammonia collected in the trap was determined using a colorimetric method based on the Berthelot reaction. The evolution of carbon dioxide was measured by trapping the carbon dioxide evolved in an alkaline trap.

20. What units are emissions data in?:

mg/g of dry weight slurry

21. Provide pollutant specific emission data for the animal/CAFO combination (e.g., total emissions, emission factors, emissions per activity unit, etc.):

see Sum339l.xls

The addition of 36 mg Ca/g (dry weight) slurry decreased peak rates of ammonia volatilization from the fresh slurry by 73% and total losses by 37%. The decrease in total ammonia losses for the anaerobic slurry was only 8%. The addition of $CaCl_2$ decreased the carbon dioxide output from both slurries through precipitation of HCO_3^- as $CaCO_3$ thereby removing a source of alkalinity from the solution. The failure of $CaCl_2$ to reduce ammonia volatilization in the anaerobic slurry indicates that the HCO_3^- was an important source of alkalinity in the fresh slurry but not in the anaerobic slurry.

22. What were the climatic conditions/season when tests were conducted? (e.g., temperature, relative humidity, wind speed, time of day, month, etc):

All experiments conducted at 25 deg. C.

23. What information is known about the feeds?:

No information provided

24. Additional manure information, including speciation and type of manure handled (liquid: < 3% total solids, slurry: 3-8% total solids, solid: >8% total solids)

aerobic manure slurry contained 15% solids

anaerobic manure slurry contained 10% solids

Manure is fresh layer droppings - care was taken to avoid contamination from feathers and feed spills.

25. Additional information:

provides analytical data for the manure

26. Additional references of interest in the data source:

27. Data concerns or caveats:

<u>Some specific CAFO operations</u>

- Confinement facility includes uncovered feedlot, free-stall barn, etc. It also includes type of ventilation such as natural or mechanical, and method of manure collection such as deep pit or pull plug pit or flushing.
- Waste Conveyance systems are usually open or closed
- Treatment systems include anaerobic lagoon, anaerobic digester, aerobic treatment, composting, etc.
- Waste storage units include closed tank, storage pond, open tank, storage shed, or open stacking
- End use includes surface spreading which can be solid or liquid manure spreading or irrigation with application rates and concentrations

AFO Project Data Summary Sheet

1. Data Source ID: 505 Reviewer Initials: JNF

2. Data Source (i.e., book title, journal title, proceedings title, volume, issue, page #):
Applied Engineering in Agriculture

3. Article Title: *Daily Variations in Odor And Gas Emissions From Animal Facilities*

4. Author: *Jun Zhu, Larry Jacobson, David Schmidt, Richard Nicolai*

5. Date of report/article: *February 2000?*

6. Location of study (city, State, region): *not provided*

7. Animal types discussed: Beef **Dairy** Veal **Swine** **Poultry-Broiler** Layer Turkey

8. What pollutants are discussed:
odor, ammonia, hydrogen sulfide

9. Is there any information related to controls or mitigation of air emissions?
No, but article suggests ventilation plays a key role in determining the gas and odor emission rates for animal buildings.

10. Did the data source contain useful air information (emission factors or enough data to develop emission factors)? If "no", indicate why was it not useful (e.g., vague, no pollutant information) and a very brief summary of what it did have (e.g., "contained only seasonal flux measurements of pollutant concentrations in the surrounding air around a swine house, but no parameter data to develop emission factors). If the answer is "no", stop the review with this question. If the answer is "yes", continue with the remaining questions.
Yes

For each animal type discussed in the article answer the following questions (i.e., use a separate summary sheet for each animal type):

11. What animal type is addressed in the remainder of this summary sheet?
Swine finishing, gestation, farrowing, and nursery

12. Number/Size/Age of animals present
26 - 550 animals; 20.5 - 204.5 kg average

13. What general CAFO operations are covered by the data source?: (Feeding, Confinement, Waste Conveyance, Storage, Treatment, or End Use):
confinement

14. What specific CAFO operation is discussed? (e.g., types of confinement area, etc., see below for detailed classification):
confinement: mechanically(4 houses) and naturally(1 house) ventilated with deep pit storage

15. What are the physical parameters of the specific CAFO operation? (Volume, surface area, ventilation rate, etc)
145.7 -1114.8 m^2 393.4 - 3010.0 m^3

16. What pollutants are discussed?:
odor, NH_3, H_2S

17. Are emissions data available? If yes, are they emission factors or total emissions?:
Yes, concentration and ventilation rates

18. Are activity factors provided? What are the units? (e.g., tons of manure, 1000 head of cattle, tons of beef production, etc.):
26 - 550 animals

19. What test methods/measurement activities were used to gather emissions information? Include description of whether measurement activities were made at one point in time or over a series of days/hours. Also, if possible, describe sample collection technique, sample analysis methods, and any QA/QC procedures performed (e.g. equipment blanks, trip blanks, etc.):
One 12-hour period, samples every 2 hours, 7 total samples
10 Tedlar bags, commercial vacuum, NH3 and H2S measured using Sensidyne detector tubes immediately after filling the bags

20. What units are emissions data in?:
Ug/s/m^2 (NH_3) Ug/s/m^2(H_2S)

21. Provide pollutant specific emission data for the animal/CAFO combination (e.g., total emissions, emission factors, emissions per activity unit, etc.) NOTE: IT MAY BE MOST CONVENIENT TO CREATE A SPREADSHEET FOR THIS DATA. PLEASE INDICATE THE FILENAME IF A SEPARATE SPREADSHEET CONTAINS THE EMISSION FACTOR DATA FROM THIS REFERENCE:
sum505sy.xls

22. What were the climatic conditions/season when tests were conducted? (e.g., temperature, relative humidity, wind speed, time of day, month, etc) Were data presented for different seasons?:
Mid September to mid October 1998, temperature observed at each sampling time

23. What information is known about the feeds?:
None

24. Additional manure information, including speciation and type of manure handled (liquid: < 3% total solids, slurry: 3-8% total solids, solid: >8% total solids).

None

25. Additional information:

26. Additional references of interest in the data source:

27. Data concerns or caveats:
Emission rate data are provided on graphs. No tables are provided. Therefore, the emission rate data on the spreadsheet were obtained by merely "eyeballing" the graphs.

<u>Some specific CAFO operations</u>

- Confinement facility includes uncovered feedlot, free-stall barn, etc. It also includes type of ventilation such as natural or mechanical, and method of manure collection such as deep pit or pull plug pit or flushing.
- Waste Conveyance systems are usually open or closed
- Treatment systems include anaerobic lagoon, anaerobic digester, aerobic treatment, composting, etc.
- Waste storage units include closed tank, storage pond, open tank, storage shed, or open stacking
- End use includes surface spreading which can be solid or liquid manure spreading or irrigation with application rates and concentrations

APPENDIX D

EMISSION DATA NOT USED IN REPORT

Table D.1

Summary of AFO Emission Factor Data
Not Used from Literature Review: Beef

AFO	Substance Emitted	Emission Factor	Units of Emission Factor	Author/Date Ref.[a]	Reason(s) not used in Emission Factor calculation:
Feeding (continual grazing)	Nitrogen	16.3	kg/ha/yr	Jarvis, 1991	Not mapable to AFO model farm operations: based on grazing
Feeding (continual grazing)	Nitrogen	0.011	kg/animal/yr	Jarvis, 1991	Not mapable to AFO model farm operations: based on grazing
Feeding (rotational grazing)	Nitrogen	6.7-25.1	kg/ha/yr	Jarvis, 1991	Not mapable to AFO model farm operations: based on grazing
Feeding (rotational grazing)	Nitrogen	0.005-0.018	kg/animal/yr	Jarvis, 1991	Not mapable to AFO model farm operations: based on grazing
Feeding	Nitrogen	129	lb N/animal/yr	Van Horn, 1998	emission factor values based on nutritional input.
Confinement, Waste Storage and End Use (spreading)	Ammonia	7.8	kg NH_3-N/animal/yr	Bouwman, et al., 1997	No corrections were made for influence that ambient NH_3 concentrations would have on the flux of ammonia to the atmosphere. This emission factor includes emissions from stable confinement as well as meadow confinement.
Confinement and Waste Conveyance	Inhalable dust	36-135	mg/hr/animal housed in litter	Takai, et al., 1998	Not mapable to AFO model farm operations: litter and cubicle.
Confinement and Waste Conveyance	Inhalable dust	78-144	mg/hr/animal housed on slats	Takai, et al., 1998	Not mapable to AFO model farm operations: litter and cubicle.
Confinement and Waste Conveyance	Respirable dust	6-26	mg/hr/animal housed in litter	Takai, et al., 1998	Could not determine if respirable dust could be correlated to PM emissions.
Confinement and Waste Conveyance	Respirable dust	5-29	mg/hr/animal housed on slats	Takai, et al., 1998	Could not determine if respirable dust could be correlated to PM emissions.
Confinement on litter	Ammonia	431	mg/hr/500 kg live weight	Groot Koerkamp et al., 1998a	Not mapable to AFO model farm operations: litter and cubicle.
Waste Storage	Hydrogen sulfide	1.17-6.41	ug/20g of homogenized manure	Banwart, 1975	Not mapable to AFO model farm operations: manure mixture
Waste Storage	Methyl mercaptan	0.42-2.37	ug/20g of homogenized manure	Banwart, 1975	Not mapable to AFO model farm operations: manure mixture

Table D.1

Summary of AFO Emission Factor Data
Not Used from Literature Review: Beef (Continued)

AFO	Substance Emitted	Emission Factor	Units of Emission Factor	Author/Date Ref.[a]	Reason(s) not used in Emission Factor calculation:
Waste Storage	Dimethyl sulfide	0.1-0.31	ug/20g of homogenized manure	Banwart, 1975	Not mapable to AFO model farm operations: manure mixture
Waste Storage	Dimethyl disulfide	0-0.24	ug/20g of homogenized manure	Banwart, 1975	Not mapable to AFO model farm operations: manure mixture
Waste Storage	Carbonyl sulfide	0-0.13	ug/20g of homogenized manure	Banwart, 1975	Not mapable to AFO model farm operations: manure mixture
Waste Storage	Carbon disulfide	0-0.31	ug/20g of homogenized manure	Banwart, 1975	Not mapable to AFO model farm operations: manure mixture
Confinement on litter	Ammonia	478	mg/hr/500 kg live weight	Groot Koerkamp et al., 1998a	Not mapable: AFO operation is litter and cubicle.
Confinement on slats	Ammonia	371	mg/hr/500 kg live weight	Groot Koerkamp et al., 1998a	Not mapable: AFO operation is litter and cubicle.
Confinement and Storage	Ammonia	1.6	kg/fattening calf/yr	USEPA, 1994	Not mapable: Cannot differentiate between confinement and storage
Confinement and Storage	Ammonia	3.87	kg/young cattle animal/yr	USEPA, 1994	Not mapable: Cannot differentiate between confinement and storage
Confinement and Storage	Ammonia	5.76	kg/young cattle animal/yr	USEPA, 1994	Not mapable: Cannot differentiate between confinement and storage
Confinement and Storage	Ammonia	10.58	kg/bull/yr	USEPA, 1994	Not mapable: Cannot differentiate between confinement and storage
Confinement on slats	Ammonia	853	mg/hr/500 kg live weight	Groot Koerkamp et al., 1998a	Not mapable to AFO model farm operations: litter and cubicle.
Confinement on slats	Ammonia	900	mg/hr/500 kg live weight	Groot Koerkamp et al., 1998a	Not mapable to AFO model farm operations: litter and cubicle.
Confinement on litter	Ammonia	262	mg/hr/animal	Groot Koerkamp et al., 1998a	Not mapable to AFO model farm operations: litter and cubicle.
Confinement on litter	Ammonia	482	mg/hr/animal	Groot Koerkamp et al., 1998a	Not mapable to AFO model farm operations: litter and cubicle.

Table D.1

Summary of AFO Emission Factor Data
Not Used from Literature Review: Beef (Continued)

AFO	Substance Emitted	Emission Factor	Units of Emission Factor	Author/Date Ref.[a]	Reason(s) not used in Emission Factor calculation:
Confinement on slats	Ammonia	346	mg/hr/animal	Groot Koerkamp et al., 1998a	Not mapable to AFO model farm operations: litter and cubicle.
Confinement on slats	Ammonia	580	mg/hr/animal	Groot Koerkamp et al., 1998a	Not mapable to AFO model farm operations: litter and cubicle.
Confinement on slats	Ammonia	686	mg/hr/animal	Groot Koerkamp et al., 1998a	Not mapable to AFO model farm operations: litter and cubicle.
Confinement	Ammonia	5.7	kg/animal/yr	Tamminga, 1992	Not mapable to AFO model farm operation: unclear whether confinement includes storage
Confinement	Methane	50	kg/animal/yr	Tamminga, 1992	Not mapable to AFO model farm operation: unclear whether confinement includes storage
End Use (surface spreading)	Ammonia	6	kg/animal/yr	EEA, 1999	Unable to determine if surface spreading includes emissions following spreading (i.e., not enough information to tell if these emissions are representative of total land application emissions).

a -- Reference refers to references in Appendix B.

Appendix D2.

Summary of AFO Emission Factor Data Not Used from Literature Review: Dairy

AFO	Substance Emitted	Emission Factor	Units of Emission Factor	Author/Date Ref.[a]	Reason(s) not used in emission factor calculation:
Confinement	Ammonia	1.0 - 1.5	kg/hd/month	USDA, et al., 2000	Cannot determine type of animal housing
Not specified	Ammonia	3.7 - 15.5	kg/animal/yr	USDA, et al., 2000	AFO operation: Not specified
Not specified	Ammonia	87.6	lb/hd/yr	USDA, et al., 2000	AFO operation: Not specified
Not specified	Ammonia	48.9	lb/hd/yr	USDA, et al., 2000	AFO operation: Not specified
Not specified	Ammonia	11.0 - 25.0	lb/hd/yr	USDA, et al., 2000	AFO operation: Not specified
Confinement and Storage	Ammonia	12.87	kg/animal/yr	USEPA, et al., 1994	Duplicate reference
End Use (Spreading)	Ammonia	21.09	kg/animal/yr	USEPA, et al., 1994	Duplicate reference
Waste Storage	Hydrogen Sulfide	6.41	ug S/20g manure mixture	Banwart, 1975	Manure mixture - not mappable to AFO operation
Feeding	Nitrogen	367	lb N/animal/yr	Van Horn, 1998	Emission factor values based on nutritional input.
Confinement	Inhalable Dust	21 - 338	mg/hr/500 kg live weight	Takai, et al., 1998	Cannot determine if "litter and cubicle confinement" is a flush or scrape operation.
Confinement	Respirable Dust	6.0 - 84.0	mg/hr/500 kg live weight	Takai, et al., 1998	Cannot determine if "litter and cubicle confinement" is a flush or scrape operation.
Confinement	Ammonia	467 - 1769	mg/hr/500 kg live weight	Groot Koerkamp et al., 1998a	Not mapable to AFO model farm operations.
Confinement	Ammonia	314 - 2001	mg/hr/animal	Groot Koerkamp et al., 1998a	Not mapable to AFO model farm operations.
Confinement	Hydrogen Sulfide	44	ug/s/animal	Zhu, et al., 2000	Not mapable to AFO model farm operations: confinement with earthen basin storage
Confinement	Ammonia	193	ug/s/animal	Zhu, et al., 2000	Not mapable to AFO model farm operations: confinement with earthen basin storage
Confinement	Ammonia	200 - 600	$mg/m^2/hr$	USDA, 2000	Cannot tie m^2 to number of animals
End use (Land Application)	Nitrous Oxide	20 - 300	g/ha/day	Comfort, et al., 1990	Cannot integrate over time to get an accurate emission factor. Possibly useful to compare with other references. Note that land application N_2O emissions are small.

a -- Reference refers to references in Appendix B.

Appendix D3.

Summary of AFO Emission Factor Data Not Used from Literature Review: Swine

AFO	Substance Emitted	Emission Factor	Units of Emission Factor	Author/Date Ref.[a]	Reason(s) not used in Emission Factor calculation:
Confinement	Ammonia	0.86 - 80.6	kg/animal space/yr	Collins 1990	Unable to standardize units to animal units basis.
Waste Storage (Lagoon)	Nitrogen	2.2 - 67	lb N/animal/yr	NCDENR, 1999	Mapable and correct units. However, data is order of magnitude greater than all other data for this operation type. Data considered an outlier.
Feeding	Nitrogen	12.88	lb N/animal lifetime	Van Horn, 1998	Unable to standardize units to animal unit basis and model based.
Confinement	Respirable Dust	13 - 141	mg/hr/500 kg live weight	Takai, et al., 1998	Could not determine if respirable dust could be correlated to PM emissions.
Confinement	Hydrogen Sulfide	0.1	ug/s/m^2	Jacobson et al., 1999	Incompatible units: Cannot convert to mass per AU per time basis.
Confinement	Hydrogen Sulfide	3.9	ug/s/m^2	Jacobson et al., 1999	Incompatible units: Cannot convert to mass per AU per time basis.
Confinement	Hydrogen Sulfide	4.5	ug/s/m^2	Jacobson et al., 1999	Incompatible units: Cannot convert to mass per AU per time basis.
Confinement	Hydrogen Sulfide	2.3	ug/s/m^2	Jacobson et al., 1999	Incompatible units: Cannot convert to mass per AU per time basis.
Confinement	Hydrogen Sulfide	4.4	ug/s/m^2	Jacobson et al., 1999	Incompatible units: Cannot convert to mass per AU per time basis.
Confinement	Hydrogen Sulfide	1.4	ug/s/m^2	Jacobson et al., 1999	Incompatible units: Cannot convert to mass per AU per time basis.
Confinement	Hydrogen Sulfide	3.6	ug/s/m^2	Jacobson et al., 1999	Incompatible units: Cannot convert to mass per AU per time basis.
Confinement	Hydrogen Sulfide	0.2	ug/s/m^2	Jacobson et al., 1999	Incompatible units: Cannot convert to mass per AU per time basis.
Confinement	Hydrogen Sulfide	0.5	ug/s/m^2	Jacobson et al., 1999	Incompatible units: Cannot convert to mass per AU per time basis.
Confinement	Hydrogen Sulfide	26.5	ug/s/m^2	Jacobson et al., 1999	Incompatible units: Cannot convert to mass per AU per time basis.

Appendix D3.

Summary of AFO Emission Factor Data Not Used from Literature Review: Swine (Continued)

AFO	Substance Emitted	Emission Factor	Units of Emission Factor	Author/Date Ref.[a]	Reason(s) not used in Emission Factor calculation:
Waste Storage	Hydrogen Sulfide	1.28	ug S/20g manure mixture	Banwart, 1975	Not mapable: Experimental design does not indicate any operation type
Not specified	Ammonia	14.1 - 27.1	lb/fattening pig/yr	Grelinger and Page, 1999	Not mapable, operation is not specified.
Not specified	Ammonia	0.00768	ton/animal/yr	Grelinger and Page, 1999	Not mapable, operation is not specified.
End use (Land Application)	Ammonia-Nitrogen	0.09 - 22.48	g/m^3 slurry applied	Pain., 1991	Mapable, but no information to get correct unit type.
End use (Land Application)	Odor	35 - 6520	10^3 Odor Units/m^3 slurry applied	Pain, 1991	Odor is not a pollutant of concern.
End use (Land Application)	Ammonia-Nitrogen	0 - 31.15	g/m^3 slurry applied	Phillips, et al., 1991	Mapable, but no information to get correct unit type.
End use (Land Application)	Odor	0.15 - 61.04	10^3 Odor Units/m^3 slurry applied	Phillips, et al., 1991	Mapable, but no information to get correct unit type.
Confinement	Ammonia	744 - 3751	mg/hr/500 kg live weight	Groot Koerkamp et al., 1998a	Not mapable to AFO model farm operation: litter and slats (no determination if deep-pit or flush)
Confinement	Ammonia	22 - 1298	mg/hr/animal	Groot Koerkamp et al., 1998a	Not mapable to AFO model farm operation: litter and slats (no determination if deep-pit or flush)
Confinement	Ammonia	19	kg/yr/500 kg live weight	Hartung, 1991	Not mapable to AFO model farm operation: confinement type not given
Not specified	Ammonia-Nitrogen	4	kg/animal/yr	Bouwman, et al., 1997	Not mapable, operation is not specified.
Confinement	Nitrogen	1.7	kg/animal/yr	Cure, 1999	Not mapable to AFO model farm operation: confinement type not given
End use (Land Application)	Nitrogen	1.6 - 1.9	kg/animal/yr	Cure, 1999	Too general and not applicable to our work.
Confinement and Storage (Lagoon)	Nitrogen	4.88 - 9.52	kg/animal/yr	McCulloch, et al., 1998	Not mapable: Confinement plus storage, but no details on confinement type
Confinement	Ammonia	0.01 - 0.026	kg/yr/kg live weight	McCulloch, 1999	Not mapable: Confinement type not given
Waste Storage (Lagoon)	Ammonia	0.075 - 0.268	kg/yr/kg live weight	McCulloch, 1999	Data are based on model results, and are extremely large.

Appendix D3.

Summary of AFO Emission Factor Data Not Used from Literature Review: Swine (Continued)

AFO	Substance Emitted	Emission Factor	Units of Emission Factor	Author/Date Ref.[a]	Reason(s) not used in Emission Factor calculation:
Confinement	Ammonia	2.89 - 7.43	kg/animal/yr	Van der Hoek, 1998	Not mapable: confinement type not given
Waste Storage	Ammonia	0.85 - 2.18	kg/animal/yr	Van der Hoek, 1998	Not mapable: Storage from what type of house not known
Feeding	Nitrogen	9.2 - 12.3	g/animal/day	Latimier, 1993	Not mapable: based on experimental feeding studies
Confinement	Ammonia-Nitrogen	6.9 - 22	g/animal/day	Pfeiffer, et al., 1993	Not mapable: confinement type not given
Confinement	Ammonia-Nitrogen	0 - 8.8	kg/yr/'pig place'	Thelosen, et al., 1993	Unknown units 'pig place'
Confinement	Nitrous Oxide-Nitrogen	0 - 2	kg/yr/'pig place'	Thelosen, et al., 1993	Unknown units 'pig place'
Confinement	Ammonia-Nitrogen	0.11 - 0.3	g/animal/hr	Groenestein, 1996	Not mapable: Deep litter and microbial stimulant not model type
Confinement	Nitric Oxide-Nitrogen	0 - 0.04	g/animal/hr	Groenestein, 1996	Not mapable: Deep litter and microbial stimulant not model type
Confinement	Nitrous Oxide-Nitrogen	0 - 0.3	g/animal/hr	Groenestein, 1996	Not mapable: Deep litter and microbial stimulant not model type
Confinement	Ammonia	41	g/hd/day	USDA, 2000	Not mapable: Solid manure handling system doesn't fit any models
Confinement	Hydrogen Sulfide	5.0 - 95	$mg/m^2/hr$	USDA, 2000	Cannot convert to standard units
Confinement	Carbon Dioxide	3	kg/pig/day	USDA, 2000	Carbon dioxide is not a target pollutant.
Not specified	Ammonia	2.8	kg/animal/yr	USDA, 2000	Not mapable, operation is not specified.
Not specified	Ammonia	3.35	kg/animal/yr	USDA, 2000	Not mapable, operation is not specified.
Not specified	Ammonia	9.1	kg/animal/yr	USDA, 2000	Not mapable, operation is not specified.
Total (confinement, waste storage and end use)	Ammonia	5.357	kg/animal/yr	USDA, 2000	Not mapable, emission factor is for whole facility.
End use (Spraying)	Ammonia-Nitrogen	0.1 - 689	mg/kg liquid hog manure after 15 days	Al-Kanani, et al, 1992b	Manure amendment study which is likely not representative of actual operation

Appendix D3.

Summary of AFO Emission Factor Data Not Used from Literature Review: Swine (Continued)

AFO	Substance Emitted	Emission Factor	Units of Emission Factor	Author/Date Ref.[a]	Reason(s) not used in Emission Factor calculation:
Confinement	PM	2.14 - 5.7	lb/animal/yr	Secrest, 2000	Not mapable: Confinement type not given
Confinement	PM	3	lb/finishing hog/yr	Secrest, 2000	Not mapable: Confinement type not given
Not specified	Ammonia	1.5	kg/pig/yr	Univ. of Minnesota, 1999	Not mappable: Operation not specified
Confinement	Ammonia	6.2	g/day/fattening pig	Ni, et.al., 2000	Not mapable: Unknown housing type
Confinement (deep-pit)	Hydrogen Sulfide	10	ug/s/animal (gestating)	Sommer and Moller, 2000	Numeric data not given. Difficult to determine precise values from graphical information presented.
Confinement	Ammonia	24	lb/1000 lbwt/yr	Hartung, 1994	Not mapable: Type of manure management not described
Confinement	Ammonia	43.4	lb/1000 lbwt/yr	Hartung, 1994	Not mapable: Type of manure management not described
Confinement	Ammonia	15	lb/1000 lbwt/yr	Hartung, 1994	Not mapable: Type of manure management not described
Confinement	Ammonia	3.4	lb/1000 lbwt/yr	Hartung, 1994	Not mapable: Type of manure management not described

a -- Reference refers to references in Appendix B.

Appendix D4.

Summary of AFO Emission Factor Data Not Used from Literature Review: Broilers

AFO	Substance Emitted	Emission Factor	Units of Emission Factor	Author/Date Ref.[a]	Reason(s) not used in Emission Factor calculation:
Feeding	Nitrogen	0.157	lb N/animal growout (life cycle)	Van Horn, 1998	Cannot determine unit of time in an animal lifetime.
Confinement (on wire)	Dust	12 - 70	mg/bird/day	Grub, et al., 1965	Not mapable: Confined on wire
Confinement and Waste Conveyance	Respirable dust	245 - 725	mg/hr/broiler housed in litter	Takai, et al., 1998	Respirable dust is not a target pollutant.
Not specified	Ammonia	0.303	lb/animal/yr	Cure, et al., 1999b	Not mapable: Unspecified operation
Confinement	Ammonia	149 - 208	mg NH_3-N/m^2/hr	USDA, 2000	Incompatible units (no animal or live weight (LW) basis)
Confinement	Hydrogen Sulfide	0.5	ug/s/m^2	Jacobson et al., 1999	Incompatible units: Cannot convert to mass per AU per time basis
Waste Storage	Ammonia	4310 - 5420	mg N/kg fine litter/week	Cabrera, et al., 1994a	Incompatible units (no animal or LW basis) due to experimental design
Waste Storage	Ammonia	2400 - 3630	mg N/kg whole litter/week	Cabrera, et al., 1994a	Incompatible units (no animal or LW basis) due to experimental design
Waste Storage	Carbon Dioxide	100 - 116	mg C/kg fine litter/week	Cabrera, et al., 1994a	Not pollutant of concern
Waste Storage	Carbon Dioxide	87 - 108	mg C/kg whole litter/week	Cabrera, et al., 1994a	Not pollutant of concern
Waste Storage	Ammonia	2150 - 3650	mg N/kg fine litter/week	Cabrera, et al., 1994b	Incompatible units (no animal or LW basis) due to experimental design
Waste Storage	Ammonia	1450 - 3225	mg N/kg whole litter/week	Cabrera, et al., 1994b	Incompatible units (no animal or LW basis) due to experimental design
Waste Storage	Carbon Dioxide	92 - 142	mg C/kg fine litter/week	Cabrera, et al., 1994b	Not pollutant of concern
Waste Storage	Carbon Dioxide	78 - 142	mg C/kg whole litter/week	Cabrera, et al., 1994b	Not pollutant of concern
Waste Storage	Ammonia	352	mg N/kg litter/day	Moore, et al., 1995	Incompatible units (no animal or LW basis)
Waste Storage and Treatment with Alum	Ammonia	4.76 - 214	mg N/kg litter/day	Moore, et al., 1995	Incompatible units (no animal or LW basis)
Waste Storage and Treatment with Alum and $CaCO_3$	Ammonia	155 - 274	mg N/kg litter/day	Moore, et al., 1995	Incompatible units (no animal or LW basis)

Appendix D4.

Summary of AFO Emission Factor Data Not Used from Literature Review: Broilers (Continued)

AFO	Substance Emitted	Emission Factor	Units of Emission Factor	Author/Date Ref.[a]	Reason(s) not used in Emission Factor calculation:
Waste Storage and Treatment with $Ca(OH)_2$	Ammonia	319 - 321	mg N/kg litter/day	Moore, et al., 1995	Incompatible units (no animal or LW basis)
Waste Storage and Treatment with $FeSO_4$	Ammonia	155 - 305	mg N/kg litter/day	Moore, et al., 1995	Incompatible units (no animal or LW basis)
Waste Storage and Treatment with commercial litter treatment	Ammonia	393 - 432	mg N/kg litter/day	Moore, et al., 1995	Incompatible units (no animal or LW basis)

a -- Reference refers to references in Appendix B

.

Appendix D5.

Summary of AFO Emission Factor Data Not Used from Literature Review: Layers

AFO	Substance Emitted	Emission Factor	Units of Emission Factor	Author/Date Ref.[a]	Reason(s) not used in Emission Factor calculation:
Feeding	Nitrogen	1205	lb N/yr/hen	Van Horn, 1998	Number is an outlier.
Confinement (6 mos. old pine shavings/ darkness)	Dust	10-22	mg/bird/day	Grub, et al., 1965	Not mapable to AFO model farm operation: layers not kept on pine shavings
Confinement (6 mos. old pine shavings/ light)	Dust	42-90	mg/bird/day	Grub, et al., 1965	Not mapable to AFO model farm operation: layers not kept on pine shavings
Confinement (cages)	Dust	44-58	mg/bird/day	Grub, et al., 1965	Lack of particle size information and animal densities are probably not representative of current production practices.
Confinement (fresh pine shavings/ darkness)	Dust	2-4	mg/bird/day	Grub, et al., 1965	Not mapable: Pine shavings
Confinement (fresh pine shavings/ light)	Dust	11-26	mg/bird/day	Grub, et al., 1965	Not mapable: pine shavings
Confinement and Waste Conveyance	Inhalable dust	1771-4340	mg/hr/layer housed in perchery	Takai, et al., 1998	Not mapable: Perchery
Confinement and Waste Conveyance	Inhalable dust	398-872	mg/hr/layer housed in cages	Takai, et al., 1998	Cannot determine how much dust is being retained in the building.
Confinement and Waste Conveyance	Respirable dust	467-682	mg/hr/layer housed in perchery	Takai, et al., 1998	Could not determine if respirable dust could be correlated to PM emissions.
Confinement and Waste Conveyance	Respirable dust	24-161	mg/hr/layer housed in cages	Takai, et al., 1998	Could not determine if respirable dust could be correlated to PM emissions.
Confinement and Waste Conveyance	Ammonia	30.9-38.3	mg/hr/laying hen housed in deep litter/perchery	Groot Koerkamp et al., 1998a	Not mapable: Perchery
Confinement and Waste Conveyance	Ammonia	7392-10892	mg/hr/livestock unit laying hens in deep litter/perchery	Groot Koerkamp et al., 1998a	Not mapable: Perchery
Waste storage (composting)	Ammonia	0.951-1.628	g/bird/day	Valli, et al., 1991	Not mapable: Waste composting
Waste Storage	Ammonia	0.03	kg/animal/yr	Van der Hoek, 1998	Not mapable: Waste storage

Appendix D5.

Summary of AFO Emission Factor Data Not Used from Literature Review: Layers (Continued)

AFO	Substance Emitted	Emission Factor	Units of Emission Factor	Author/Date Ref.[a]	Reason(s) not used in Emission Factor calculation:
Confinement	Ammonia	31	g/hen/yr	Hartung, 1994	Not mapable to AFO model operation: manure belt drying
Confinement	Ammonia	34	g/hen/yr	Hartung, 1994	Not mapable to AFO model operation: manure belt drying
Waste treatment (composting)	Ammonia	109.702	kg/day	Bonazzi, et.al., 1988	Insufficient data given in article and doesn't appear to fit any model AFO operation.
Waste Conveyance and storage	Ammonia	2.9-15.4	mg/h/hen	Groot Koerkamp, et al., 1998b	Not mapable: Waste storage and conveyance
Total (Feeding, confinement, waste handling and storage, and waste treatments)	Ammonia	10-386	g/hen/yr	Groot Koerkamp, 1994	Not mapable: Entire operation estimate
End Use (Land Application with addition of CaCl2)	Carbon Dioxide	151-167	mg/g dry weight slurry	Witter, 1991	Not a pollutant of concern.
End Use (Land Application)	Carbon Dioxide	173-180	mg/g dry weight slurry	Witter, 1991	Not a pollutant of concern.

a -- Reference refers to references in Appendix B.

Appendix D6.

Summary of AFO Emission Factor Data Not Used from Literature Review: Turkey

AFO	Substance Emitted	Emission Factor	Units of Emission Factor	Author/Date Ref.[a]	Reason(s) not used in Emission Factor calculation:
Feeding	Nitrogen	0.87	lb N/animal lifetime	Van Horn, 1998	Do not know length of time in an animal lifetime, may be useful to compare the N excretion values in this paper with ASAE values, but do not recommend emission factor values.
Confinement	Hydrogen Sulfide	0.4	ug/s/m^2	Jacobson et al., 1999	Incompatible units, cannott convert to mass per AU per time basis
Not specified	Ammonia-Nitrogen	1.56	lb/animal/year	Cure, et al., 1999	Not mapable: Too general to be applicable.

a -- Reference refers to references in Appendix B.

APPENDIX E

CALCULATION OF EMISSION FACTORS TRANSLATED FROM ONE ANIMAL SPECIES TO ANOTHER

Calculation of Emission Factors Developed from Translated Emissions From One Animal Species to Another

In the absence of ammonia and hydrogen sulfide emissions data for an animal species, an approach was developed to estimate emissions based on translating emissions information from another animal species. The approach involved adjusting emissions based on the nitrogen and sulfur excretion rates of different animal species.

Emissions information was only translated from one species to another if : 1) there was no emissions information available from the literature review and; 2) the operation is expected to have similar emission mechanisms regardless of the animal type (e.g., anaerobic microbes at a dairy lagoon act similar to those in a swine lagoon).

Consequently, ammonia and hydrogen sulfide emission factors for dairy flush houses, dairy anaerobic lagoons, and layer anaerobic lagoons were developed by translating emissions information from swine model farms. Ammonia emission factors for turkey houses were also calculated using information from broiler houses.

Section 8.2.1 discusses the methodology used to develop emission factors using this approach. Example calculations of the methodology are presented in this appendix.

Calculation of Dairy Ammonia Flush House Emission Factor From Swine Flush House Information

1. The fraction of excreted nitrogen (N) (or sulfur(S)) emitted from the operation/animal type for which emission factors were translated from (i.e., the source) was calculated. Refer to Chapter 8 for excretion and manure production data used in these calculations.

   A finisher pig excretes 0.42 lbN/day-1000lb live weight-day, average live weight (LW) of finisher pig is 154 lb, with a 119 day cycle and 2.8 cycles per year, 2.5 pigs per AU. Therefore:

$$\text{Excreted_N} = \frac{0.42\text{lbN}}{\text{day}\cdot 1000\text{lbLW}} \times \frac{154\text{lbLW}}{\text{pig}} \times \frac{119\text{days}}{\text{cycle}} \times \frac{2.8\text{cycles}}{\text{yr}} \times \frac{2.5\text{pig}}{\text{AU}} = 53.9\,{}^{\text{lbN}}\!/_{\text{AU}\cdot\text{yr}}$$

   The emission factor from the literature is 10.3 lb NH_3/AU-yr, which converts to 8.5 lb N/AU-yr. The resultant fraction is:

$$\text{Fraction_emitted} = \frac{\text{Emission_factor}}{\text{Excreted_N}} = \frac{8.5\,{}^{\text{lbN}}\!/_{\text{AU}\cdot\text{yr}}}{53.9\,{}^{\text{lbN}}\!/_{\text{AU}\cdot\text{yr}}} = 0.16$$

2. The fraction emitted from the source animal type was multiplied by the annual nitrogen excretion in the target animal type.

In this example, given an excretion rate of 0.45 lb N/day-1000lb live weight-day, an average live weight of 1350 lb, 335 day cycle, one cycle per year, and that one AU is equal to 0.7 cows, dairy cows excrete 142 lb N/AU-yr. (Dry cows are not included in N and S excretion to flush freestall barns or anaerobic lagoons, since it was judged that the barn will be filled to capacity with the lactating cows in the herd.)

Therefore, the dairy flush house ammonia emission factor is calculated as follows:

$$\text{Dairy_emissions} = \text{Excreted_N} \times \text{Fraction_emitted} = \frac{142\,\text{lbN}}{\text{AU}\cdot\text{yr}} \times 0.16 = 23\,{}^{\text{lbN}}\!/_{\text{AU}\cdot\text{yr}}$$

This converts to an emission factor for dairy flush houses of 28 lb NH_3/AU-yr.

The other instances where emissions information were translated from one animal species to another are shown in the following calculations.

<u>Dairy Anaerobic Lagoon Ammonia from Swine Anaerobic Lagoon Ammonia:</u>

Swine N excretion calculated as follows:

$$\text{Excreted_N} = \frac{0.42\,\text{lbN}}{\text{day}\cdot 1000\,\text{lbLW}} \times \frac{154\,\text{lbLW}}{\text{pig}} \times \frac{119\,\text{days}}{\text{cycle}} \times \frac{2.8\,\text{cycles}}{\text{yr}} \times \frac{2.5\,\text{pig}}{\text{AU}} = 53.9\,{}^{\text{lbN}}\!/_{\text{AU}\cdot\text{yr}}$$

The emission factor from the literature is 15.1 lb NH_3/AU-yr, which converts to 12.4 lb N/AU-yr. The resultant fraction is:

$$\text{Fraction_emitted} = \frac{\text{Emission_factor}}{\text{Excreted_N}} = \frac{12.4\,{}^{\text{lbN}}\!/_{\text{AU}\cdot\text{yr}}}{53.9\,{}^{\text{lbN}}\!/_{\text{AU}\cdot\text{yr}}} = 0.23$$

Dairy cows excrete 142 lb N/ AU-yr (calculated above). Dairy ammonia emissions from anaerobic lagoons are calculated as follows:

$$\text{Dairy_emissions} = \text{Excreted_N} \times \text{Fraction_emitted} = \frac{142\,\text{lbN}}{\text{AU}\cdot\text{yr}} \times 0.23 \times \frac{17}{14} = 40\,{}^{\text{lbNH}_3}\!/_{\text{AU}\cdot\text{yr}}$$

Layer Anaerobic Lagoon Ammonia from Swine Anaerobic Lagoon Ammonia:

Swine N excretion 53.9 lb N/AU-yr. The emission factor for swine anaerobic lagoon is 12.4 lb N/AU-yr, which results in a fraction emitted on 0.23 (calculated above). Layer N excretion rate calculated as follows:

$$\text{Excreted}_\text{N} = \frac{0.83\,\text{lbN}}{\text{day}\cdot 1000\ \text{lbLW}} \times \frac{3.97\ \text{lbLW}}{\text{hen}} \times \frac{350\ \text{days}}{\text{cycle}} \times \frac{1\text{cycle}}{\text{yr}} \times \frac{100\ \text{hen}}{\text{AU}} = 115.4\ {}^{\text{lbN}}\!/_{\text{AU}\cdot\text{yr}}$$

Therefore, emissions from layer anaerobic lagoons are calculated according to the following:

$$\text{Layer_emissions} = \text{Excreted_N} \times \text{Fraction_emitted} = \frac{115.4\text{lbN}}{\text{AU}\cdot\text{yr}} \times 0.23 \times \frac{17}{14} = 32.2\ {}^{\text{lbNH}_3}\!/_{\text{AU}\cdot\text{yr}}$$

Dairy Anaerobic Lagoon Hydrogen Sulfide from Dairy Anaerobic Lagoon Hydrogen Sulfide:

Swine S excretion is calculated as follows:

$$\text{Excreted}_\text{S} = \frac{0.078\,\text{lbS}}{\text{day}\cdot 1000\ \text{lbLW}} \times \frac{154\ \text{lbLW}}{\text{pig}} \times \frac{119\ \text{days}}{\text{cycle}} \times \frac{2.8\text{cycles}}{\text{yr}} \times \frac{2.5\text{pig}}{\text{AU}} = 10.0\ {}^{\text{lbS}}\!/_{\text{AU}\cdot\text{yr}}$$

Emission factors for anaerobic lagoons following flush houses and non-flush houses are 9.8 and 2.6 lb H_2S/AU-yr respectively. These result in S emissions of 9.2 and 2.4 lbs S/AU-yr. The fraction emitted for anaerobic lagoons following flush houses calculated by:

$$\text{Fraction_emitted} = \frac{\text{Emission_factor}}{\text{Excreted_S}} = \frac{9.2\ {}^{\text{lbS}}\!/_{\text{AU}\cdot\text{yr}}}{10\ {}^{\text{lbS}}\!/_{\text{AU}\cdot\text{yr}}} = 0.92$$

Using the same method, a S fraction emitted of 0.24 for anaerobic lagoons following non-flush houses is calculated. Dairy cow S excretion is calculated as:

$$\text{Excreted}_\text{S} = \frac{0.051\,\text{lbS}}{\text{day}\cdot 1000\ \text{lbLW}} \times \frac{1350\ \text{lbLW}}{\text{cow}} \times \frac{335\ \text{days}}{\text{cycle}} \times \frac{1\text{cycle}}{\text{yr}} \times \frac{0.7\text{cow}}{\text{AU}} = 16.1\ {}^{\text{lbS}}\!/_{\text{AU}\cdot\text{yr}}$$

Emissions are calculated as follows for lagoons following flush operations in dairies:

$$\text{Dairy_emissions} = \text{Excreted_S} \times \text{Fraction_emitted} = \frac{16.1\text{lbS}}{\text{AU}\cdot\text{yr}} \times 0.92 \times \frac{34}{32} = 15.7\ {}^{\text{lbH}_2\text{S}}\!/_{\text{AU}\cdot\text{yr}}$$

Following the same logic, an emission factor of 4.1 lb H_2S/AU-yr was calculated for lagoons at non-flush dairy operations.

Layer Anaerobic Lagoon Hydrogen Sulfide from Layer Anaerobic Lagoon Hydrogen Sulfide:

Swine S excretion rate (calculated above) is 10 lb S/AU-yr. For anaerobic lagoons following non-flush houses(there is no model farm for layer flush houses) the fraction emitted as H_2S is 0.24. Layer S excretion given as follows:

$$\text{Excreted_S} = \frac{0.14\text{lbS}}{\text{day}\cdot 1000\,\text{lbLW}} \times \frac{3.97\,\text{lbLW}}{\text{hen}} \times \frac{350\,\text{days}}{\text{cycle}} \times \frac{1\text{cycle}}{\text{yr}} \times \frac{100\,\text{hen}}{\text{AU}} = 19.4\,\text{lbS}/\text{AU}\cdot\text{yr}$$

and the hydrogen sulfide emission factor is calculated by:

$$\text{Layer_emissions} = \text{Excreted_S} \times \text{Fraction_emitted} = \frac{19.4\text{lbS}}{\text{AU}\cdot\text{yr}} \times 0.24 \times \frac{34}{32} = 4.9\,\text{lbH}_2\text{S}/\text{AU}\cdot\text{yr}$$

Turkey House Ammonia from Broiler House Ammonia:

Broiler N excreted is calculated by:

$$\text{Excreted_N} = \frac{1.10\text{lbN}}{\text{day}\cdot 1000\text{lbLW}} \times \frac{2.6\text{lbLW}}{\text{broiler}} \times \frac{49\text{days}}{\text{cycle}} \times \frac{5.5\text{cycles}}{\text{yr}} \times \frac{100\text{broilers}}{\text{AU}} = 77\,\text{lbN}/\text{AU}\cdot\text{yr}$$

and the emission factor for broiler confinement is 24.4 lb NH_3/AU-yr, which translates into 20.0 lb N/AU-yr. The fraction N emitted as NH_3 is given by:

$$\text{Fraction_emitted} = \frac{\text{Emission_factor}}{\text{Excreted_N}} = \frac{20.0\,\text{lbN}/\text{AU}\cdot\text{yr}}{77\,\text{lbN}/\text{AU}\cdot\text{yr}} = 0.26$$

Since hens and toms have differing production characteristics, nitrogen excretion for both were calculated and then averaged to produce one annual N excretion value for turkeys. For hens, the following:

$$\text{Excreted_N} = \frac{0.74\text{lbN}}{\text{day}\cdot 1000\text{lbLW}} \times \frac{11.5\text{lbLW}}{\text{turkeyhen}} \times \frac{105\text{days}}{\text{cycle}} \times \frac{2\text{cycles}}{\text{yr}} \times \frac{55\text{turkeys}}{\text{AU}} = 98.3\,\text{lbN}/\text{AU}\cdot\text{yr}$$

and for toms:

$$\text{Excreted_N} = \frac{0.74\text{lbN}}{\text{day}\cdot 1000\text{lbLW}} \times \frac{16.8\text{lbLW}}{\text{turkeytom}} \times \frac{133\text{days}}{\text{cycle}} \times \frac{2\text{cycles}}{\text{yr}} \times \frac{55\text{turkeys}}{\text{AU}} = 182\,{}^{\text{lbN}}\!/_{\text{AU}\cdot\text{yr}}$$

The average of toms and hens is 140 lb N/AU-yr. The emission factor for turkey confinement is then calculated by:

$$\text{Turkey_emissions} = \text{Excreted_N} \times \text{Fraction_emitted} = \frac{140\text{lbN}}{\text{AU}\cdot\text{yr}} \times 0.26 \times \frac{17}{14} = 44\,{}^{\text{lbNH}_3}\!/_{\text{AU}\cdot\text{yr}}$$

APPENDIX F

EXAMPLE CALCULATION OF METHANE EMISSIONS FROM ANAEROBIC LAGOONS

Example Calculation of Methane Emissions from Anaerobic Lagoons

The approach used in EPA's greenhouse gas inventory to calculate methane emissions from AFO's is discussed in section 8.2.4. Methane emissions are calculated using equation F.1:

$$\text{Methane Emissions (per head)} = VS_{excreted} \times B_o \times 0.67\ kg/m^3 \times MCF \qquad (F.1)$$

Where:

$VS_{excreted}$	=	Volatile solids excreted (kg/yr)
B_o	=	Maximum methane producing capacity (m^3 CH_4/kg VS)
MCF	=	Methane conversion factor based on the waste management system (%)
0.67	=	Methane density at 20 °C, 1 atmosphere (kg/$m^{3)}$

The methane producing capacity of animal waste is related to the maximum quantity of methane (m^3 CH_4) that can be produced per kilogram of volatile solids (VS) in the manure, commonly referred to as B_o. Values for B_o are available from literature and are based on the animal species and diet. AFO manure management practices have a methane conversion factor (MCF) to reflect the methane production potential (i.e., the fraction of the volatile solids that is actually converted to methane). Table 8-7 presents MCFs for various AFO manure management practices. While the values in Table 8-7 are appropriate for dry systems, they do not accurately reflect emissions from wet systems (anaerobic lagoons, deep pits, and storage ponds). For deep pits and storage ponds, the approach is based on using the Van't Hoff-Arrhenius equation (F.2) instead of MCF's to incorporate geographic and seasonal variations in temperature. Annual average temperatures for a State are input into the equation.

$$f = \exp\left[\frac{E\ (T2 - T1)}{R\,T1\,T2}\right] \qquad (F.2)$$

Where:

f	=	Temperature adjustment factor, substituting for MCF, dimensionless
T1	=	303.16 °K
R	=	Ideal gas constant (1.987 cal/K mol)
E	=	Activation energy constant (15,175 cal/mol)
T2	=	Ambient temperature for climate zone (for this analysis, average annual temperature for a geographic region is used)(°K)

For anaerobic lagoons, methane emission calculations are also based on the Van't Hoff-Arrhenius equation, but temperature inputs are based on monthly average temperatures instead of yearly to account for the longer retention time and associated build up of volatile solids in these systems (USEPA, 2001).

In the following example the methane emissions methodology is used to calculate emissions from an anaerobic lagoon at a 500 AU swine model farm in Iowa in January 1999.

1. Monthly temperatures are calculated by using county-level temperature and population data. The weighted-average temperature for a state is calculated using the population estimates and average monthly temperature in each county.

   Table F-1 presents the monthly average temperatures from Iowa and North Carolina in 1999 from EPA's Greenhouse Gas Inventory (USEPA, 2001).

2. Monthly temperatures are used to calculate a monthly Van't Hoff-Arrhenius "f" factor, using equation F.2.

   For January 1999, in Iowa, f is calculated to be:

$$f = \exp\left[\frac{15{,}175\ (264.2 - 303.16)}{1.987 * 264.2 * 303.16}\right] = 0.0243$$

3. Monthly production of volatile solids is calculated based on the number of animals present.

   Table 8-10 provides the annual production of volatile solids for a 500 AU swine model farm 173 tons/yr. On a per day basis this converts to 0.47 tons/day or 430.37 kg/day. On a monthly basis for January (31 days), this converts to 13,341 kilograms.

4. Monthly production of volatile solids that are added to the system are adjusted using a management and design practices factor. This factor accounts for other mechanisms by which volatile solids are removed from the management system prior to conversion to methane, such as solids being removed from the lagoon for application to cropland. This factor, equal to 0.8, was estimated in EPA's greenhouse gas inventory using currently available methane measurement data from anaerobic lagoon systems in the United States (USEPA, 2001).

   Adjusted volatile solids = 0.8 * 13,341 = 10,673 kilograms for January

5. The amount of volatile solids available for conversion to methane is set equal to the adjusted amount of volatile solids produced during the month (from Step 4) plus volatile solids that may remain in the system from the previous month (volatile solids produced in the previous month minus the volatile solids

consumed in the previous month). In order to account for the carry over of volatile solids from the year prior to the inventory year for which estimates are calculated, it is assumed in the methane calculation for lagoons that a portion of the volatile solids from October, November, and December of the year prior to the inventory year are available in the lagoon system starting January of the inventory year.

From table F-1, the volatile solids remaining from the previous month were calculated to be 26, 346 kg (27, 791-1445). The total volatile solids in January is calculated to be:

26, 346 + 10, 673 = 37, 019 kg

6. The amount of volatile solids consumed during the month is equal to the amount available for conversion multiplied by the "f" factor.

37, 019 * 0.0243 = 900 kg

7. The amount of volatile solids carried over from one month to the next is equal to the amount available for conversion minus the amount consumed.

37,019 - 900 = 36, 119 kg

8. The estimated amount of methane generated during the month is equal to the monthly volatile solids consumed multiplied by the maximum methane potential of the waste (B_o). For swine, B_o is equal to 0.48 m^3 methane/kg volatile solids (Table 8-6).

= 900 kg volatile solids consumed* 0.48 m^3 methane/kg volatile solids
= 432 m^3 methane
= 289 kg methane (assuming a density of 0.67 kg/m3, from equation F.1)

Tables F-1 and F-2 show the calculations for 500 AU swine farms in Iowa and North Carolina, respectively, in 1999. Numbers in the example may not exactly match the tables due to rounding.

Table F-1.

Calculation of Methane Emissions From 500AU Swine Model Farm in Iowa in 1999

Month	Average Monthly Temperature[a]			f[b]	Volatile Solids (kg)				Methane Emitted (kg)[g]
	(K)	(C)	(F)		Produced[c]	Adjusted Production[d]	Cumulative Produced [e]	Consumed[f]	
October	284.4	11.3	52.3	0.19	13,341	10,673	10,673	2,028	973
November	277.6	4.4	39.9	0.10	12,911	10,329	18,974	1,856	891
December	271.3	(1.8)	28.7	0.05	13,341	10,673	27,791	1,445	694
January	264.2	(8.9)	15.9	0.02	13,341	10,673	37,019	904	434
February	273.1	(0.0)	32.0	0.06	12,050	9,640	45,756	2,869	1,377
March	275.3	2.1	35.8	0.08	13,341	10,673	53,560	4,165	1,999
April	282.8	9.6	49.3	0.16	12,911	10,329	59,723	9,720	4,666
May	288.9	15.7	60.3	0.29	13,341	10,673	60,676	17,412	8,358
June	293.4	20.3	68.5	0.43	12,911	10,329	53,593	23,230	11,150
July	297.8	24.7	76.4	0.64	13,341	10,673	41,036	26,113	12,534
August	294.0	20.9	69.6	0.46	13,341	10,673	25,596	11,710	5,621
September	289.1	15.9	60.7	0.29	12,911	10,329	24,215	7,111	3,413
October	283.2	10.0	50.1	0.17	13,341	10,673	10,673	1,807	867
November	279.7	6.5	43.7	0.12	12,911	10,329	19,195	2,310	1,109
December	270.6	(2.6)	27.4	0.05	13,341	10,673	27,558	1,327	637
SUM[h]					157,084	125,667	458,600	108,679	52,166

[a] From EPA's greenhouse gas inventory (USEPA, 2001)
[b] Calculated using Van't Hoff-Arrhenius equation (Step 2).
[c] From volatile solids in swine manure in Table 8-10 and converting to monthly basis (Step 3).
[d] Adjusted volatile solids produced using a management and design practices factor of 0.8 (USEPA, 2001) (Step 4).
[e] Cumulative volatile solids from previous month and current month minus volatile solids consumed in the previous month (Step 5).
[f] Calculated by multiplying by monthly "f" factor (Step 6).
[g] Calculated from volatile solids consumed multiplied by methane potential of waste, B_0. For swine B_0 is equal to 0.48 m^3/kg volatile solids. Volume of methane was converted to mass (kg) using a density of methane of 0.67 kg/m^3 from equation F.1 (Step 8).
[h] Sums for January through December of 1999.

Table F-2.

Calculation of Methane Emissions From 500 AU Swine Model Farm in North Carolina in 1999

Month	Average Monthly Temperature[a]			f[b]	Volatile Solids (kg)				Methane Emitted (kg)[g]
	(K)	(C)	(F)		Produced[c]	Adjusted Production[d]	Cumulative Produced [e]	Consumed[f]	
October	290.4	17.2	63.0	0.33	13,352	10,681	10,681	3,521	1,690
November	285.7	12.6	54.6	0.21	12,921	10,337	17,497	3,758	1,804
December	283.2	10.1	50.2	0.17	13,352	10,681	24,421	4,153	1,993
January	282.2	9.0	48.2	0.15	13,352	10,681	30,949	4,751	2,280
February	281.8	8.6	47.5	0.15	12,060	9,648	35,846	5,292	2,540
March	282.7	9.5	49.1	0.16	13,352	10,681	41,236	6,637	3,186
April	290.3	17.1	62.8	0.33	12,921	10,337	44,936	14,702	7,057
May	292.8	19.6	67.3	0.41	13,352	10,681	40,915	16,703	8,018
June	296.8	23.6	74.5	0.58	12,921	10,337	34,548	20,059	9,628
July	300.2	27.1	80.7	0.78	13,352	10,681	25,170	19,648	9,431
August	299.9	26.8	80.2	0.76	13,352	10,681	16,204	12,335	5,921
September	294.8	21.7	71.0	0.49	12,921	10,337	14,205	6,963	3,342
October	289.5	16.3	61.3	0.30	13,352	10,681	10,681	3,239	1,555
November	287.1	14.0	57.1	0.24	12,921	10,337	17,779	4,349	2,087
December	281.3	8.2	46.7	0.14	13,352	10,681	24,112	3,405	1,635
SUMS[h]					157,206	125,764	336,583	118,083	56,680

[a] From EPA's greenhouse gas inventory (USEPA, 2001)
[b] Calculated using Van't Hoff-Arrhenius equation (Step 2).
[c] From volatile solids in swine manure in Table 8-10 and converting to monthly basis (Step 3).
[d] Adjusted volatile solids produced using a management and design practices factor of 0.8 (USEPA, 2001) (Step 4.)
[e] Cumulative volatile solids from previous month and current month minus volatile solids consumed in the previous month (Step 5).
[f] Calculated by multiplying by monthly "f" factor (Step 6).
[g] Calculated from volatile solids consumed multiplied by methane potential of waste, B_0. For swine B_0 is equal to 0.48 m^3/kg volatile solids. Volume of methane was converted to mass (kg) using a density of methane of 0.67 kg/m^3 from equation F.1 (Step 8).
[h] Sums for January through December of 1999.

References

USEPA. 2001. Inventory of U.S. Greenhouse Gas Emissions and Sinks: 1990-1999. U.S. Environmental Protection Agency (USEPA). EPA 238-R-00-001.

APPENDIX G

AFO MODEL FARMS

Table G-1 summarizes the model farms developed for this study. Graphical representations of the model farms are also included in Appendices G.1 (Beef), G.2 (Dairy), G.3 (Veal), G.4 (Swine), and G.5 (Poultry).

Table G-1. Summary of Model Farms

Animal	Model Farm ID	Components of Model Farms			
		Confinement and Manure Collection System	Solids Separation Activities	Manure Storage and/or Stabilization	Land Application
Beef	B1A	Drylot (scraped)	Solids separation for run-off (using a settling basin)	Storage pond (wet manure) and stockpile (dry manure)	Liquid manure application; and solid manure application
	B1B		No solids separation		
Veal	V1	Enclosed house (flush)	None	Anaerobic lagoon	Liquid manure application
	V2	Enclosed house w/pit storage	None	None	Liquid manure application
Dairy	D1A	Freestall barn (flush); milking center (flush); drylot (scraped)	Solids separation	Anaerobic lagoon (wet manure) and stockpile (dry manure)	Liquid manure application; and solid manure application
	D1B		No solids separation		
	D2A	Freestall barn (scrape); milking center (flush); drylot (scraped)	Solids separation	Anaerobic lagoon (wet manure) and stockpile (dry manure)	Liquid manure application; and solid manure application
	D2B		No solids separation		
	D3A	Milking center (flush); drylot (scraped)	Solids separation	Storage pond (wet manure) and stockpile (dry manure)	Liquid manure application; and solid manure application
	D3B		No solids separation		
	D4A	Dry lot feed alley (flush); milking center (flush); drylot (scraped)	Solids separation	Anaerobic lagoon (wet manure) and stockpile (dry manure)	Liquid manure application; and solid manure application
	D4B		No solids separation		
Swine	S1	Enclosed house (flush)	None	Anaerobic lagoon	Liquid manure application
	S2	Enclosed house (pit recharge)	None	Anaerobic lagoon	Liquid manure application
	S3A	Enclosed house (pull plug pit)	None	Anaerobic lagoon	Liquid manure application
	S3B			External storage tank or pond	Liquid manure application
	S4	Enclosed house (w/pit storage)	None	None	Liquid manure application
Poultry-broilers	C1A	Broiler house w/bedding	None	Covered storage of cake; and open litter storage	Solid manure application

Table G-1. Summary of Model Farms (Continued)

Animal	Model Farm ID	Components of Model Farms			
		Confinement and Manure Collection System	Solids Separation Activities	Manure Storage and/or Stabilization	Land Application
Poultry-broilers (Continued)	C1B			Covered storage of cake	
Poultry-layers	C2	Caged layer high rise house	None	None	Solid manure application
	C3	Cage layer house (flush)	None	Anaerobic lagoon	Liquid manure application
Poultry-turkeys	T1A	Turkey house w/bedding	None	Covered storage of cake; and open litter storage	Solid manure application
	T1B			Covered storage of cake	

Appendix G.1

Beef Model Farms

Beef Model Farms

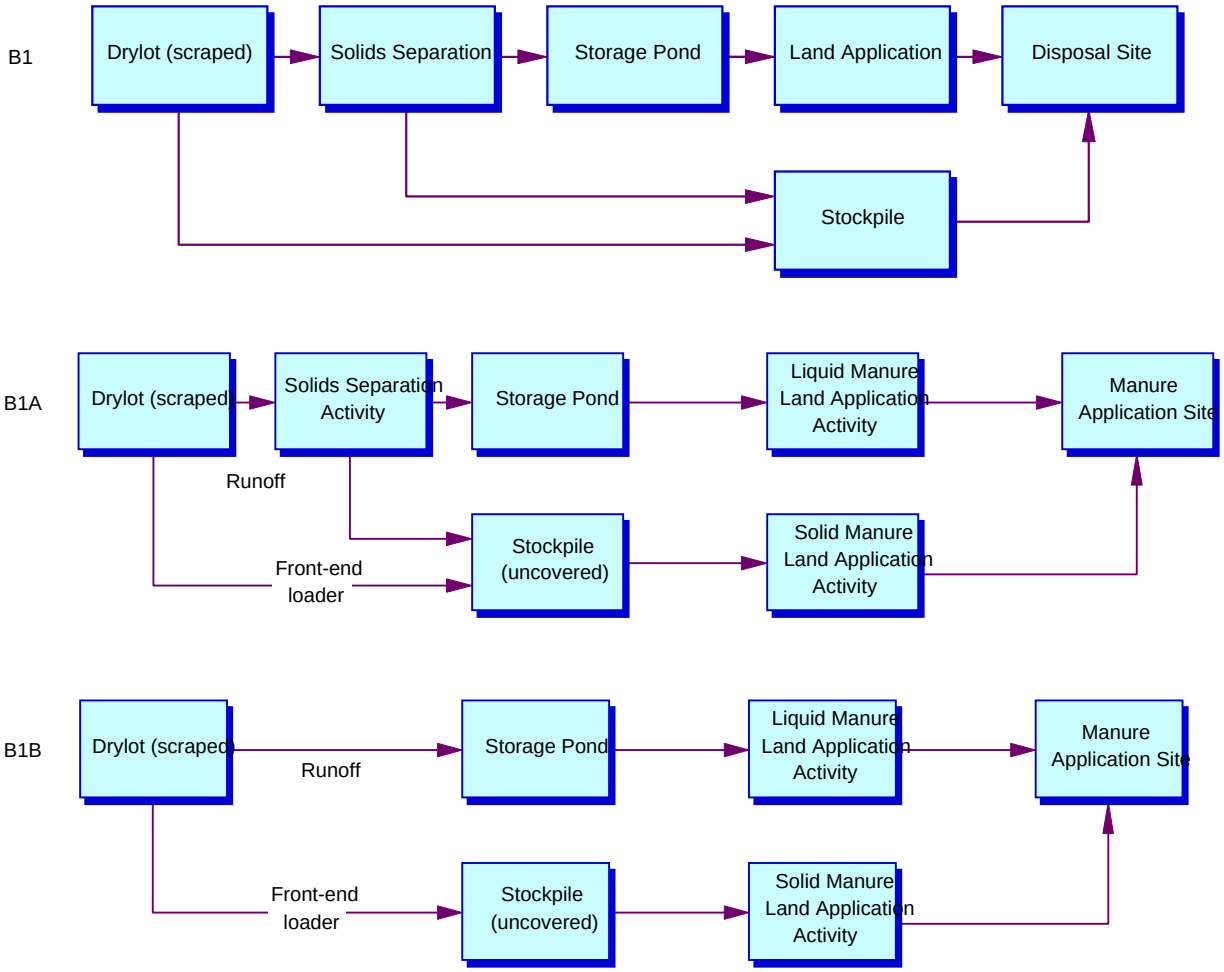

Appendix G.2

Dairy Model Farms

Flush Dairy

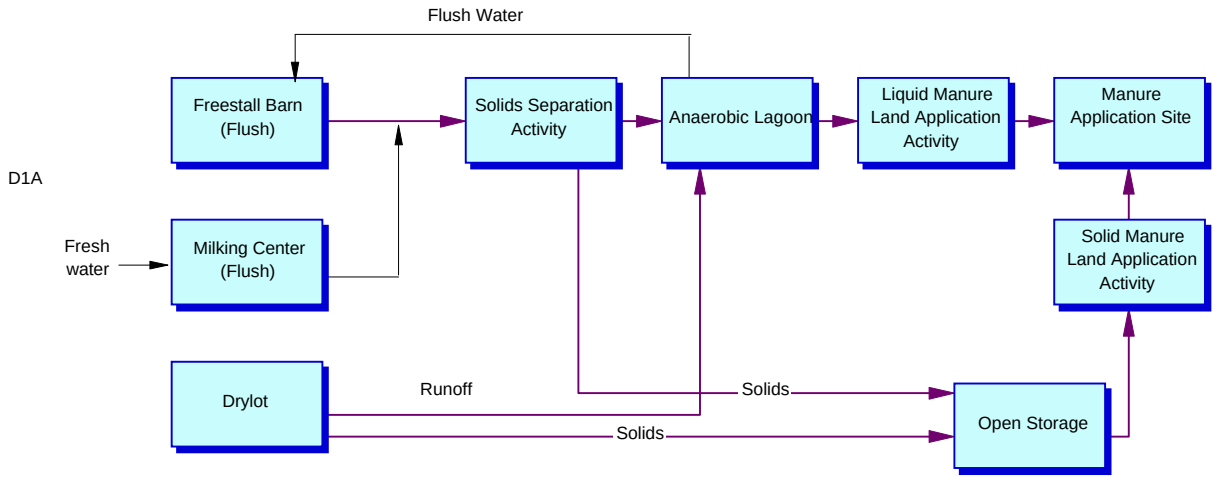
Flush Water
Freestall Barn (Flush)
Solids Separation Activity
Anaerobic Lagoon
Liquid Manure Land Application Activity
Manure Application Site
D1A
Fresh water
Milking Center (Flush)
Solid Manure Land Application Activity
Drylot
Runoff
Solids
Open Storage
Solids

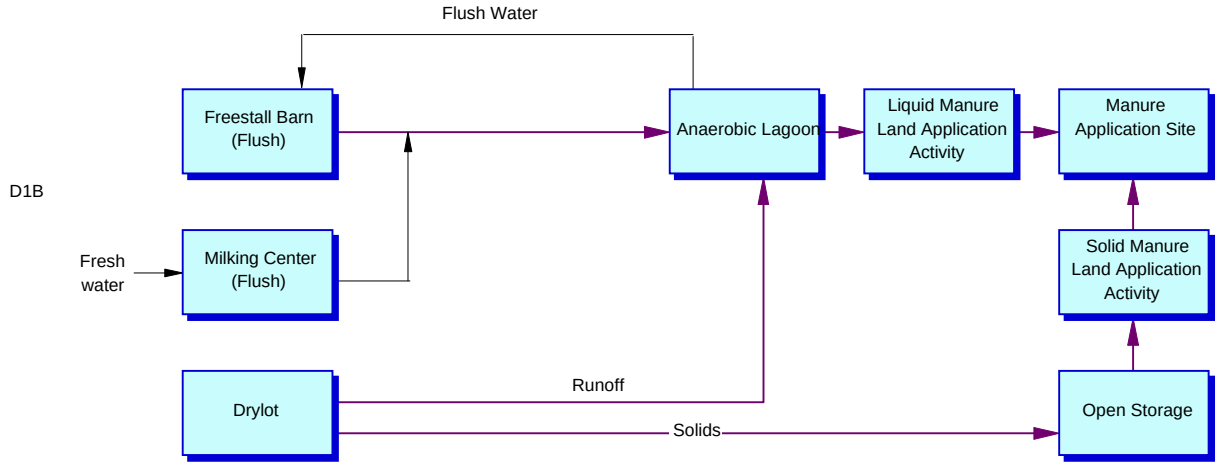
Flush Water
Freestall Barn (Flush)
Anaerobic Lagoon
Liquid Manure Land Application Activity
Manure Application Site
D1B
Fresh water
Milking Center (Flush)
Solid Manure Land Application Activity
Drylot
Runoff
Open Storage
Solids

Scrape Dairy

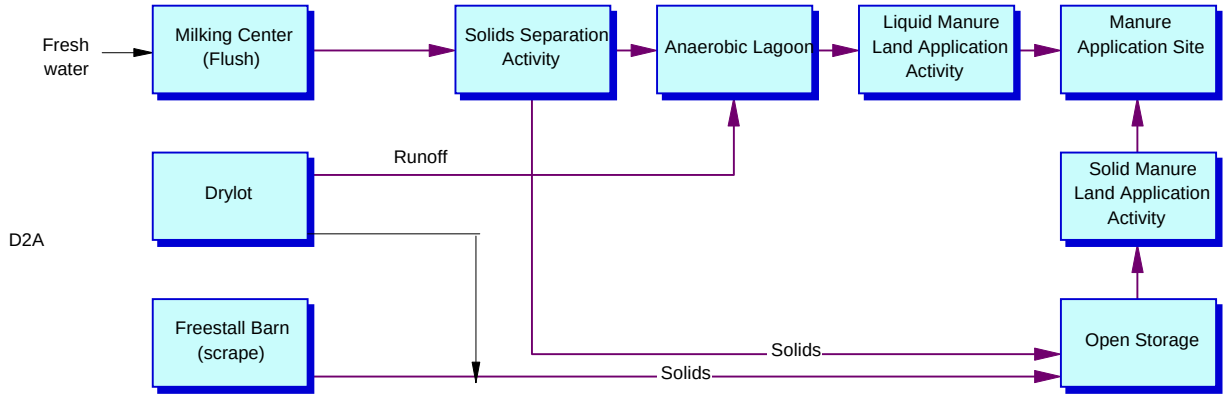

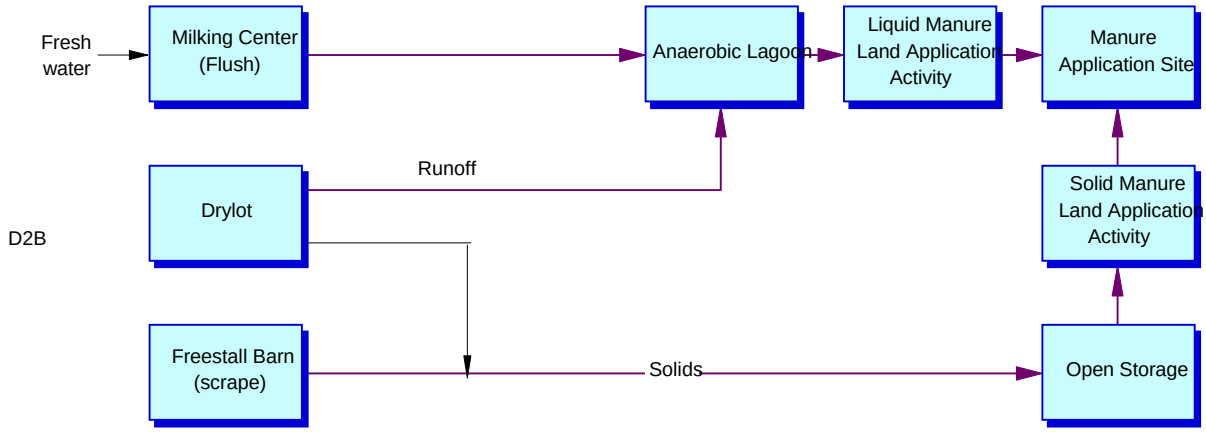

Feedlot Dairy

D3A

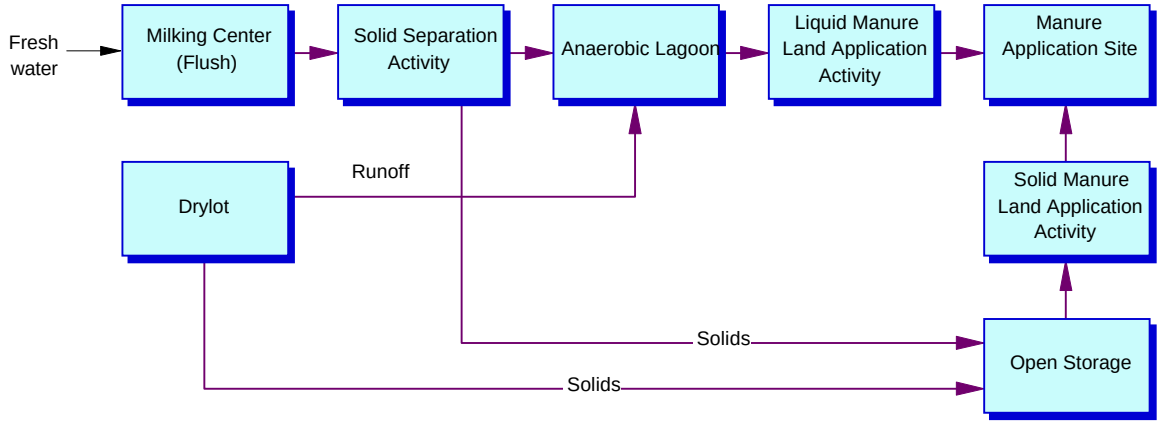

D3B

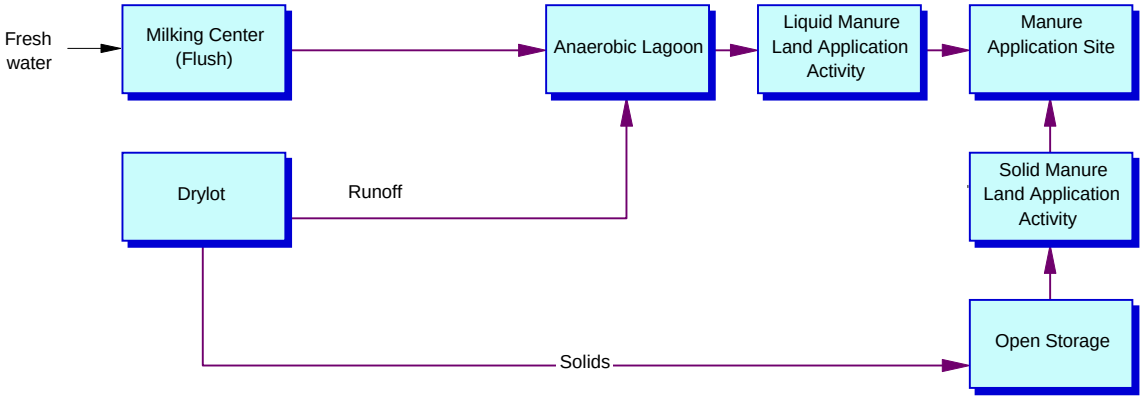

Flushed Alley Dairy

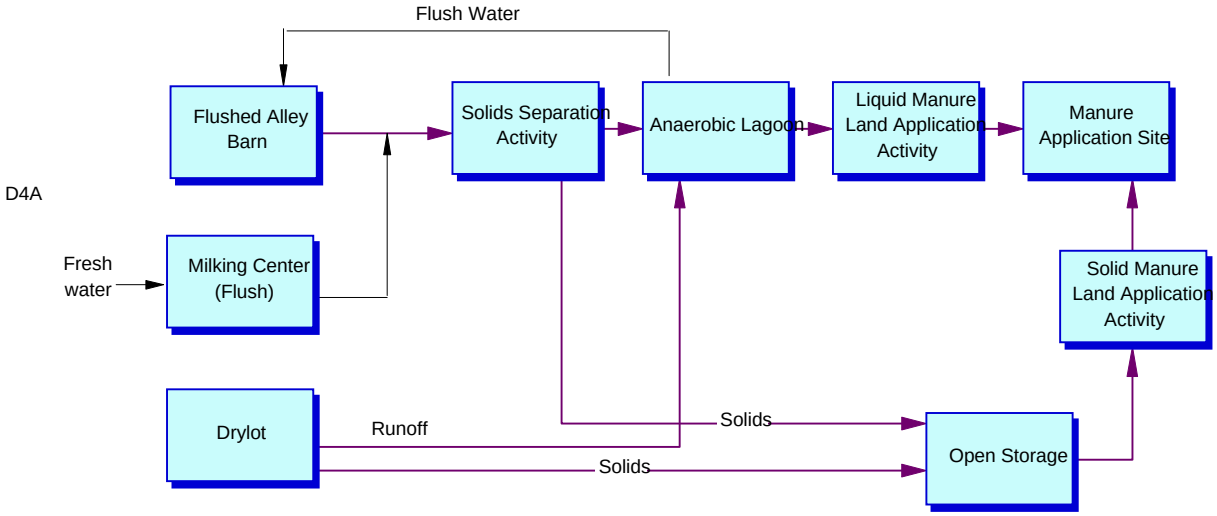

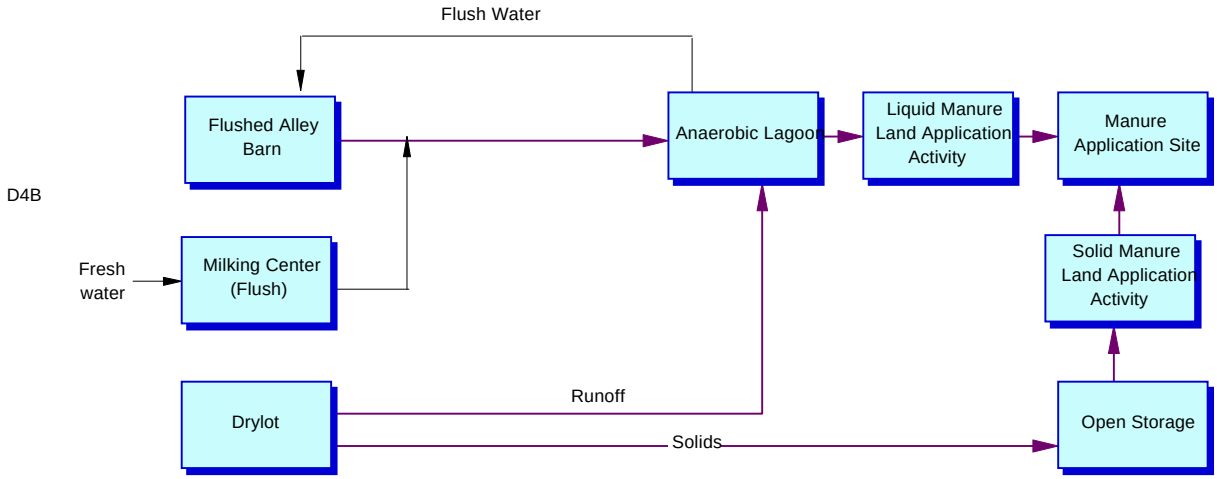

Appendix G.3

Veal Model Farms

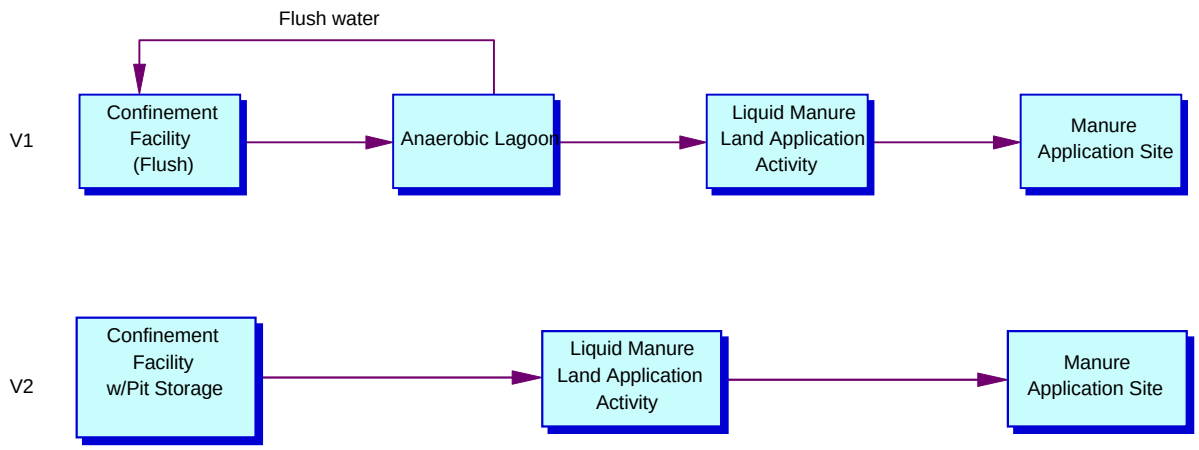
Flush water
V1
Confinement Facility (Flush)
Anaerobic Lagoon
Liquid Manure Land Application Activity
Manure Application Site
V2
Confinement Facility w/Pit Storage
Liquid Manure Land Application Activity
Manure Application Site

Appendix G.4

Swine Model Farms

Swine Models

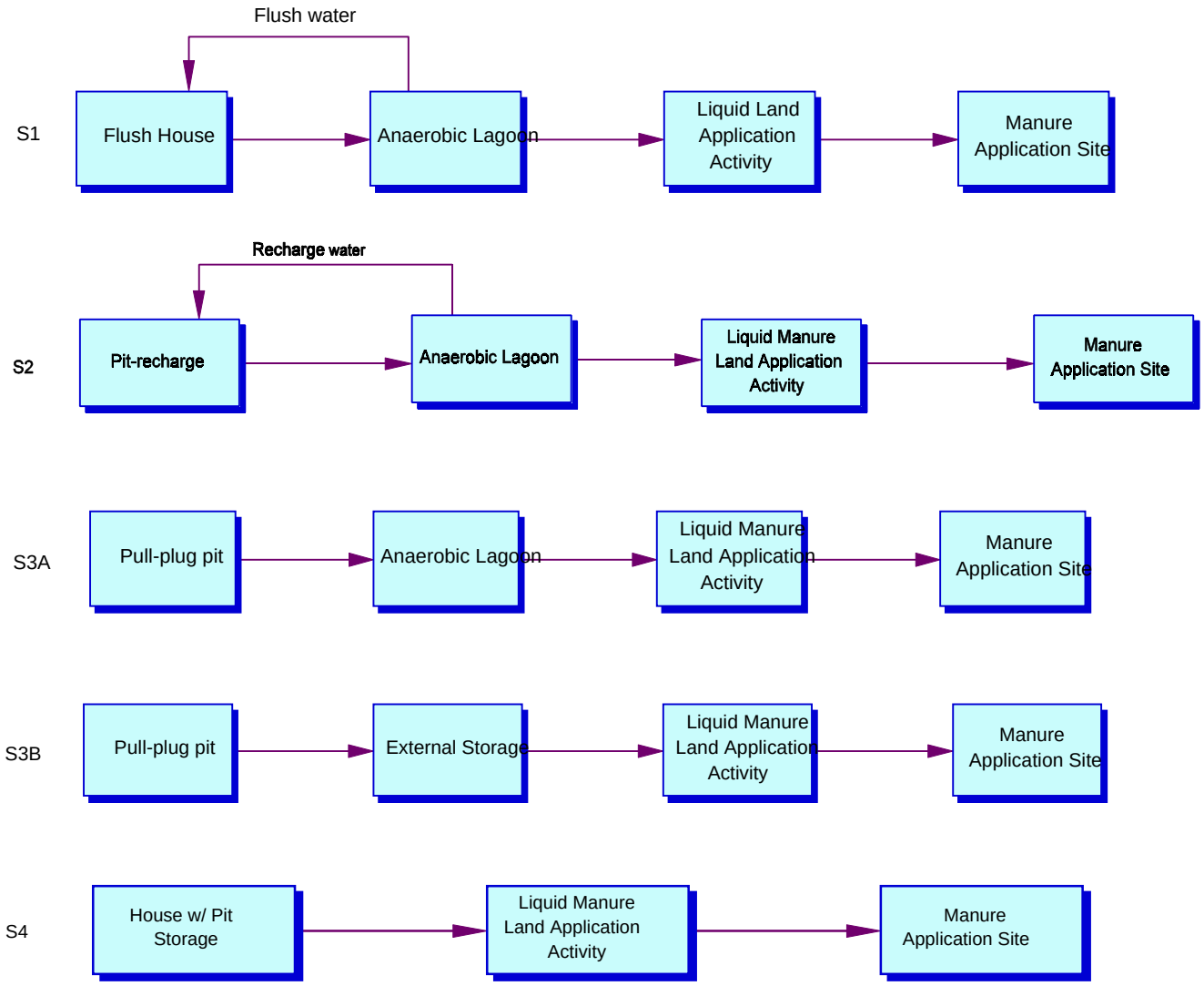

Appendix G.5

Poultry Model Farms

Broilers

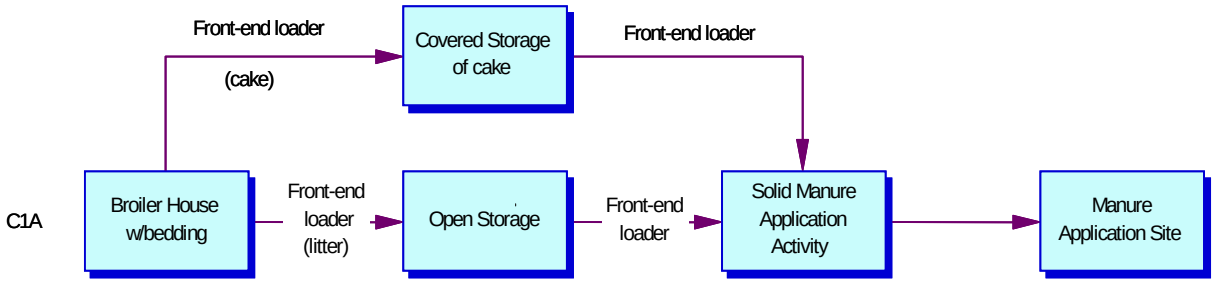

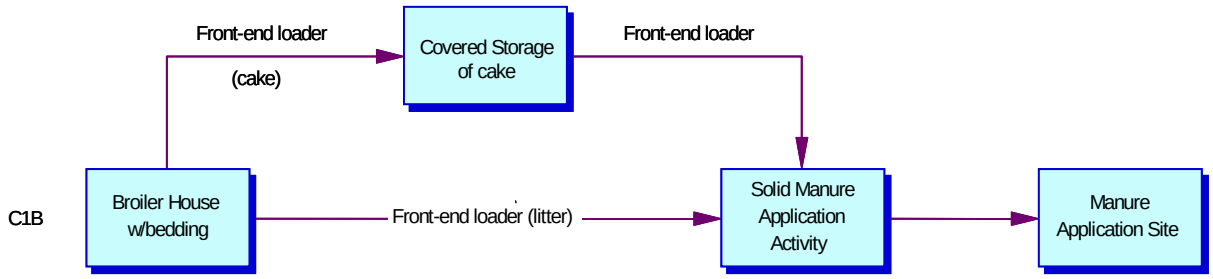

Layers

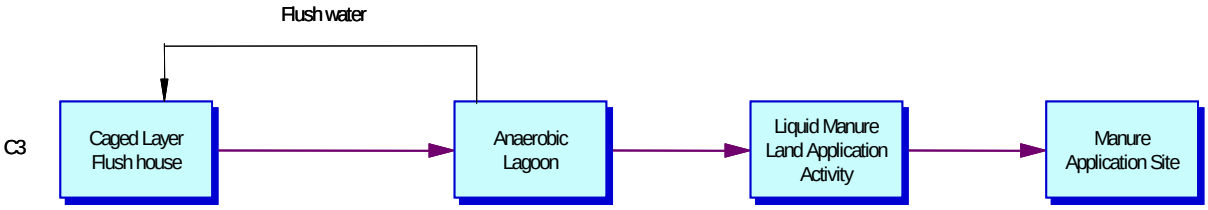

Turkeys

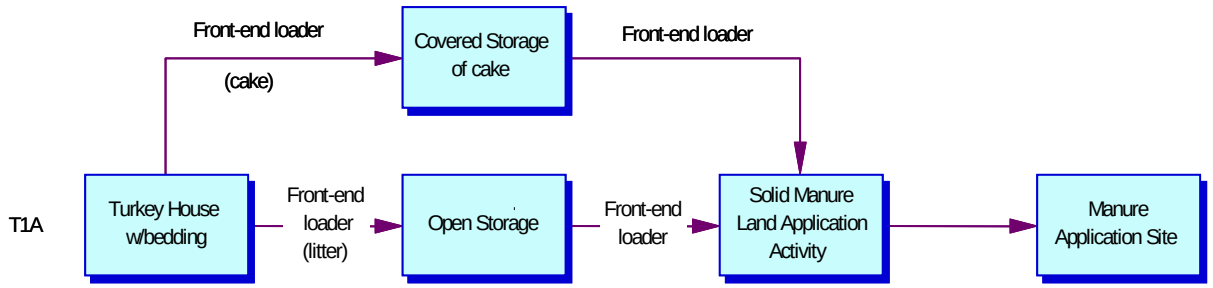
T1A
Turkey House w/bedding
Front-end loader (cake)
Covered Storage of cake
Front-end loader
Front-end loader (litter)
Open Storage
Front-end loader
Solid Manure Land Application Activity
Manure Application Site

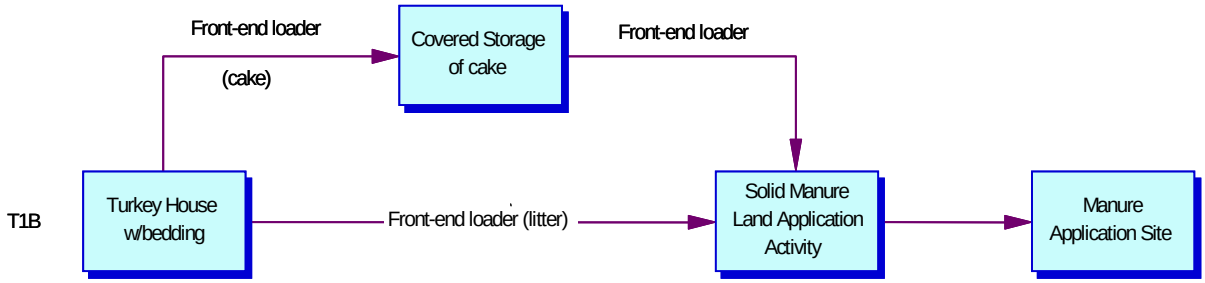
T1B
Turkey House w/bedding
Front-end loader (cake)
Covered Storage of cake
Front-end loader
Front-end loader (litter)
Solid Manure Land Application Activity
Manure Application Site