Emission Factors for Barges and Marine Vessels

Final Test Report

For
National Grain and Feed Association

MRI Project No. 310012.1.002

November 2, 2001

Emission Factors for Barges and Marine Vessels

Final Test Report

For
National Grain and Feed Association
1250 Eye Street, NW
Suite 1003
Washington, DC 20005

Attn: Thomas O'Connor

MRI Project No. 310012.1.002

November 2, 2001

Preface

This report describes an emission field-testing program conducted by Midwest Research Institute under a contract with the National Grain and Feed Association (NGFA). Mr. Thomas O'Connor, NGFA Director of Technical Services, oversaw the project. Dr. Gregory E. Muleski served as MRI's project leader and authored this report.

MIDWEST RESEARCH INSTITUTE

Gregory E. Muleski
Principal Environment Engineer
Applied Engineering

Approved:

Paul C. Constant, P.E.
Acting Director
Applied Engineering

November 2, 2001

Contents

Preface ii
Figures iv
Tables iv
Executive Summary v

Section 1. Introduction 1

Section 2. Test Matrix and Site Selection 3
2.1 Overview of Barge and Vessel Operations 3
2.2 Development of Test Matrix/Site Selection Criteria 3

Section 3. Test Methodology 7
3.1 General Description of Exposure Profiling 7
3.2 Overview of the Test Methodology 8
3.3 Data Analysis 11

Section 4. Test Results 15
4.1 Vessel Loading Operations 16

Section 5. Discussion of PM-10 Results 22
5.1 Analysis 22
5.2 Recommendation 23

Section 6. Results for PM-2.5 24

Section 7. References 27

Appendices

Appendix A—Test Plan
Appendix B—Quality Assurance/Quality Control Activities
Appendix C—Photographs from the Test Program
Appendix D—Example Calculations
Appendix E—Detailed Test Data

Figures

Figure 1. Cyclone Preseparator (40 acfm) 9
Figure 2. Cyclone Preseparator/3-Stage Cascade Impactor (20 acfm) 10
Figure 3. Integration Scheme for Vessel Loading and Barge Unloading Tests.....14
Figure 4. Equipment Deployment for Vessel (Ship) Loading Tests.....17
Figure 5. Sampling Deployment for Barge Unloading Tests 19
Figure 6. Sampling Equipment Deployment for Barge Loading Tests 20

Tables

Table 1. Planned Test Matrix.....6
Table 2. Planned Barge Loading Test Matrix 6
Table 3. Planned Barge Unloading Test Matrix 6
Table 4. Planned Ship Loading Test Matrix 6
Table 5. Upwind (Background) PM-10 Concentrations 16
Table 6. PM-10 Emission Factors—Vessel (Ship) Loading.....18
Table 7. PM-10 Emission Factors—Barge Unloading 19
Table 8. PM-10 Emission Factors—Barge Loading.....21
Table 9. Recommended Uncontrolled PM-10 Emission Factors.....23
Table 10. PM-2.5 Emission Factors—Barge Loading.....25
Table 11. PM-2.5/PM-10 Ratios—Ship Loading 25
Table 12. PM-2.5/PM-10 Ratios—Barge Unloading 26
Table 13. Recommended Uncontrolled PM-2.5 Emission Factors.....26
Table 14. Summary PM-2.5/PM-10 Ratios 26

Executive Summary

In June 1998, the U.S Environmental Protection Agency (EPA) revised Chapter 9.9.1 in the Agency's document entitled, "Compilation of Air Pollutant Emission Factors," (commonly referred to as "AP-42") [1]. The chapter included updated emission factors for particulate matter (PM) emissions from truck, rail, and headhouse internal handling (legs, belts, distributor, scale, etc.) operations at grain elevators. The updated emission factors were based in large part on data gathered during a 1995 research project conducted by the National Grain and Feed Foundation (NGFF) [2]. The NGFF research project was initiated after the National Grain and Feed Association (NGFA) raised questions on the appropriateness of some of the pre-1995 EPA data for use in developing emission factors.

The 1995 NGFF testing program indicated that EPA's pre-1995 emission factors for rail, truck, and internal headhouse operations were flawed in that they severely overestimated emission levels. It was found that these pre-1995 data incorrectly relied upon control device inlet measurements to characterize uncontrolled emissions. Emission factors for uncontrolled sources based on that type of data are biased high because the suction applied by the control device pulls or strips additional dust from the grain stream. The 1995 study also called into question the pre-1995 factors for barge and vessel operations, because they had been based on analogous types of data. As a result, EPA decided not to include the pre-1995 data for barge and vessel operations in the revised 1998 chapter in AP-42. The industry decided that more reliable data on barge and vessel operations needed to be developed in a cooperative effort with EPA.

To enable EPA to develop reliable barge and vessel emission factors for AP-42, the NGFA contracted with Midwest Research Institute (MRI) to perform the research project described in this report. The research program represented a cooperative effort between EPA and industry. State environmental officials were invited to review and comment on the research protocol and to observe field-testing.

A total of sixty tests were performed during November and December 2000 using the EPA-endorsed testing technique called "exposure profiling." This is the same approach used in the 1995 NGFF research project. The field-testing program gathered data on particulate matter no greater than 10 ?m in aerodynamic diameter (PM-10) and particulate matter no greater than 2.5 ?m in aerodynamic diameter (PM-2.5). These size fractions form the basis for EPA's National Ambient Air Quality Standards (NAAQS) for particulate matter. Furthermore, the Agency's stated policy is that PM-10 should be used when determining compliance with the permitting provisions of the Clean Air Act.

Emissions data on uncontrolled operations were gathered at two barge loading facilities, and three export facilities that unloaded barges and loaded ocean-going vessels. The facilities handled corn, soybeans, and wheat. The research project tested the equipment and operating conditions typically found at barge and vessel loading and unloading facilities.

Using data gathered during the project, the following PM-10 and PM-2.5 emission factors are recommended for barge and vessel operations:

Table ES-1. Recommended Uncontrolled Emission Factors

Operation	PM-10 Emission factor (lb/ton)	PM-2.5 Emission factor (lb/ton)
Barge Loading	0.0040	0.00055
Barge Unloading		
?? Continuous Barge Unloader	0.0073	0.0019
?? Marine Leg	0.038	0.0050
Vessel Loading	0.012	0.0022

An overall PM-2.5/PM-10 emission ratio of 0.17 was found as the weighted average value for thirty-seven different test cases (See Table 14) resulting from this research. An emission ratio of 0.25 is currently used in AP-42 for the PM10/PM emission ratio.

Section 1. Introduction

In June 1998, the Environmental Protection Agency (EPA) revised Chapter 9.9.1 in the Agency's document entitled, "Compilation of Air Pollutant Emission Factors," (commonly referred to as "AP-42") [1]. The chapter included updated emission factors for particulate matter (PM) emissions from truck, rail, and headhouse internal handling (legs, belts, distributor, scale, etc.) operations at grain elevators. The new emission factors were based in large part on data gathered during a 1995 research project conducted by the National Grain and Feed Foundation (NGFF) [2].

The NGFF research project was initiated after the National Grain and Feed Association (NGFA) raised questions on the accuracy of pre-1995 EPA data on fugitive or nonducted emissions from grain handling operations. The NGFA noted its belief that the pre-1995 EPA data likely overstated PM emissions from uncontrolled grain handling operations, because these factors were based upon dust concentration measurements at the inlet side of a cyclone or fabric filter.

The 1995 NGFF research project was performed by Midwest Research Institute (MRI) and comprised fifty-four tests conducted on four different grains and at three separate grain elevators. The project demonstrated that previous EPA emission factors for truck, rail, and internal grain handling operations significantly overstated expected PM emissions from uncontrolled sources. Control device inlet measurements do not accurately represent emissions from uncontrolled sources because the suction applied by the control device pulls or strips additional dust from the grain stream. It is now widely accepted that the inlet side of a dust aspiration device is not an accurate estimate of uncontrolled emissions from grain handling operations and should not be used as the basis for emission factors in AP-42.

In addition, the NGFF project called into question the reliability of the EPA's emissions data for barge and vessel operations because those factors were also based upon measurements at the inlet side of an aspiration device. (Testing of barge and vessel operations was not included in the 1995 NGFF project.) As a result, the Agency rejected these previously used data as flawed and not a reliable basis for establishing PM emission factors for barge and vessel operations. Thus, the June 1998 revisions to Chapter 9.9.1 in AP-42 did not contain any emission factors for barge and vessel operation.

To address this deficiency, the NGFA contracted with MRI in 1999 to perform the research project described in this report. The objective of the program was to develop reliable data that could form the basis for barge and vessel emission factors in AP-42. The EPA participated in reviewing and commenting on the research protocol. The Agency also participated in the site selection visits and observed field testing at several sites. State environmental officials were invited to review and comment on the research protocol and to observe field testing.

The testing program focused on typical grain handling facilities located on navigable waters that: (1) load barges with bulk grains and oilseeds; (2) unload grain from covered barges; and (3) export facilities that load ocean-going vessels. The research project was designed to test the equipment and operating conditions typically found at barge and vessel loading and unloading facilities.

The field testing program gathered data on particulate matter no greater than 10 ? m in aerodynamic diameter (PM-10) and particulate matter no greater than 2.5 ? m in aerodynamic diameter (PM-2.5). These size fractions form the basis for EPA's National Ambient Air Quality Standards (NAAQS) for particulate matter. In addition, the Agency's stated policy is that PM-10 should be used when determining compliance with the permitting provisions of the Clean Air Act.

The field testing program applied the same measurement strategy that MRI used in the 1995 NGFF test program. This test strategy employs a testing methodology called exposure profiling which is recognized by EPA [3,4] as the most appropriate and practical means to measure dust emissions from uncontrolled sources at grain handling operations. Testing was performed in accordance with quality assurance/quality control (QA/QC) procedures outlined in the test plan (which is included as Appendix A). The QA/QC procedures involved routine audits of sampling and analysis procedures. Examples of items audited included gravimetric analysis, flow rate calibration, and data processing. Further details are given in Appendix A. QA/QC results, including blank filter results to account for background particulate levels obtained during the program are presented in Appendix B.

The following sections provide further details on the test matrix and site selection criteria (Section 2); test methodology including exposure profiling (Section 3); PM-10 test results (Section 4); analysis of test results and recommended PM-10 emission factors (Section 5); and PM-2.5 test results and ratio of PM-2.5 to PM-10 (Section 6). Section 7 presents the references cited. Appendix A contains the test plan, Appendix B contains the QA/QC results obtained in the field program. Photos from the test program are presented in Appendix C, while Appendix D contains example calculations for each of the three source types. Finally, Appendix E contains detailed test data such as filter weights, concentrations and exposure values.

Section 2.
Test Matrix and Site Selection

2.1 Overview of Barge and Vessel Operations

Facilities located along navigable rivers load barges with grain/oilseeds for shipment to other river facilities as well as facilities that export bulk commodities overseas. A barge is loaded through a vertical spout fed by a conveyor delivering grain from the shore side facility. Drop heights from the end of the conveyor to the top of the barge typically vary from 20 ft to 40 ft depending on river conditions and facility design. Photo 1 in Appendix C shows an example of a typical barge loading operation.

The barge's cargo compartment is covered with either a lift top or metal roll top cover. Barges equipped with so-called lift top covers have a number of doors located along the top of the cover that can be opened to load grain into different areas of the barge. Lift top covers can be made of either fiberglass or metal. Most barges built in the last 10 years are equipped with fiberglass lift covers with doors approximately 4 ft to 8 ft apart. A barge with a fiberglass flip top cover is shown in Photo 1 in Appendix C. In contrast, different sections of metal roll top covers must be rolled open and then closed to facilitate loading grain into different areas of the barge, a time-consuming and labor-intensive operation.

At the export unloading facility, the entire cover is removed from the barge, and the grain is unloaded using either a marine leg (i.e., a bucket elevator leg) or a continuous barge unloader (or CBU, such as those manufactured by Heyl & Patterson and Link Belt). Photo 2 in Appendix C shows a CBU and Photo 3 shows a marine leg with four legs operating as a unit unloading a barge.

Export facilities load grain onto ocean going vessels using either a sloped spout or a vertical spout. Several different manufacturers are currently used by the industry to supply this type of equipment. Photo 4 in Appendix C shows a typical vertical spout and Photo 5 shows sloped spouts used at an export facility.

2.2 Development of Test Matrix/Site Selection Criteria

In 1999, the NGFA contracted with MRI to design a field testing program to develop scientifically defensible uncontrolled PM emission factors for typical barge and marine vessel operations. The NGFA accompanied by MRI discussed the draft test plan with EPA in January 2000. Based upon feedback from EPA, MRI issued a revised test plan in April 2000 (included as Appendix A to this report) indicating that testing would:

?? Follow the general guidelines for AP-42 [5].

?? Be conducted at three export facilities, three barge unloading facilities, and two barge loading facilities. Table 1 summarizes the number of sites and expected number of emission tests at each test facility.

?? Focus on uncontrolled sources, i.e., control devices were to be deactivated during test periods.

?? Span common ranges of loading and unloading practices, equipment, and operating conditions. In particular, the test plan specified that:

1. The barge unloading test program would include the two unloading systems commonly used by industry—the marine leg and CBU. Because marine legs represent a small and decreasing fraction of barge unloading equipment used at export facilities, more emphasis would be placed on the CBU unloading systems.
2. The vessel loading test program would include both types of loading spouts found at export facilities, i.e., vertical and sloped spouts. However, more emphasis would be placed on vertical spouts because this type is more common at export facilities.
3. Barge loading facilities would span the typical loading spout drop height of 20 ft to 40 ft found along navigable rivers to account for any variation in emissions that might occur because of this factor.

?? Focus on lift top barges with doors that flip open. After some study, it was decided not to include metal roll top barges in the test program because: (1) roll top barges constitute a small and declining fraction of barge covers used in the grain industry;[*] and (2) roll top barges would not provide a suitable "platform" for the sampling equipment used in the test program.

?? Span the normal loading and unloading cycle found at grain facilities. To achieve this goal the test plan proposed the following features:

1. For barge loading, the program would gather data on emissions at the beginning and end of loading through a flip top door near the bow, middle, and stern of the barge. Table 2 lists the number and timing of tests planned at the barge loading facilities included in field testing.
2. For barge unloading, testing would begin about 5 min after the unloading equipment started removing grain from the barge (it typically takes between 45 and 60 min to unload a barge at an export facility) to help ensure that test results are representative of the expected emissions during unloading. Table 3 lists the number and timing of tests that used the two unloading devices included in the program.

[*] Metal roll top barges are no longer manufactured for use in the grain industry due to their higher cost and operational and safety concerns.

3. For vessel loading, the program would gather data that spanned the loading of a ship hold. Table 4 lists the number and timing of tests planned for ship loading at the three test sites.

?? Include replicate tests.

?? Gather data on PM-10 and PM-2.5 emissions.

In August 2000, representatives of NGFA, EPA, and MRI visited candidate test sites for barge loading, barge unloading, and vessel loading in Louisiana. NGFA later visited several additional candidate test sites for barge loading along the Mississippi River in November 2000. The suitability of these facilities for inclusion in the field testing program was based on the following criteria:

?? Safe accessibility for the field sampling crew and ability to provide a safe and adequate platform to deploy sampling equipment.

?? A minimum mean daytime wind speed of 3 to 4 mph.

?? Good wind movement with minimal interference or obstruction in both the upwind and downwind directions.

?? No significant upwind sources of PM in the immediate vicinity of the operation.

?? An export facility having both barge unloading and ship loading operations that are suitable for testing.

?? Barge loading facilities that span a wide geographic range and have the desired spout drop heights.

Following the visit, meteorological data for each candidate host site were analyzed to determine each site's alignment with respect to prevailing wind directions.

Three export elevators in Louisiana were selected to host the testing program for barge unloading and vessel loading. A river facility in Louisiana and a river facility in Missouri were selected for testing of barge loading.

Table 1. Planned Test Matrix

Operation	Number of host sites	Number of emission tests[a]
Barge Loading	2	24
Barge Unloading	3	16[b]
Ship Loading	3	21

[a] As presented in the test plan.
[b] Actual number of tests performed was 15.

Table 2. Planned Barge Loading Test Matrix

Geographic location	Drop height (ft)	Level of grain under hatch	No. of tests[a]		
			Beginning of barge loading	Middle of barge loading	End of barge loading
Test Site 1	20-30 ft.	Start load	2	2	2
		End load	2	2	2
Test Site 2	30-40 ft.	Start load	2	2	2
		End load	2	2	2

[a] As presented in the test plan.

Table 3. Planned Barge Unloading Test Matrix

Unloading equipment	Test site	No. of tests[a]
Continuous Barge Unloader	Louisiana export facility 1	6
Continuous Barge Unloader	Louisiana export facility 2	6
Marine Leg	Louisiana export facility 3	4[b]

[a] As presented in the test plan.

[b] Three (3) tests were conducted.

Table 4. Planned Ship Loading Test Matrix

Spout geometry	Test site	No. of tests[a]		
		Beginning of loading ship hold	Middle of loading ship hold	End of loading ship hold
Straight Spout	Export facility 1	2	2	2
Straight Spout	Export facility 2	2	2	2
Inclined Spout	Export facility 3	3	3	3

[a] As presented in the test plan.

Section 3.
Test Methodology

This section discusses the sampling methodology employed in the program. As noted previously, the barge/marine vessel test program relied on the exposure profiling measurement technique employed in the 1995 NGFF testing program.

3.1 General Description of Exposure Profiling

MRI developed exposure profiling during the early 1970s and has applied the concept to a wide variety of open fugitive emission sources. AP-42 emission factors based on exposure profiling test results first appeared in 1976. Exposure profiling is EPA's preferred method to characterize emissions from fugitive dust sources. Exposure profiling produces emission factors based on the principle of conservation of mass. Unlike "upwind-downwind" sampling, exposure profiling does not rely on assumptions about the source geometry nor on an uncalibrated dispersion model in order to develop emission factors. Emission factors based on the exposure profiling method typically have the highest quality ratings in AP-42. EPA has typically accepted exposure profiling test results over the past 25 years. The test plan (Appendix A) presents additional details on how the test strategy was developed.

The approach effectively addresses "fugitive" emission sources that release air pollutants to the ambient atmosphere by means other than a stack, vent, or duct. The exposure-profiling concept represents a measurement technique that is potentially applicable to any fugitive emission source, provided that the following conditions are met:

- ?? Sampling equipment can be placed physically close to the source
- ?? Particulate from emission source can be isolated from upwind (background) levels of the pollutant
- ?? Sufficient air movement is available to convey the emitted pollutant to the sampling array.

The exposure profiling technique relies on simultaneous multipoint measurement of both concentration and airflow over the effective area of the emission plume in a mass flux measurement scheme. In this way, exposure profiling applies the same basic measurement concept, as does traditional stack sampling. In comparison to most stack sources, however, fugitive sources do not produce emissions that are thoroughly mixed in a well-defined, constant airflow. For these reasons, exposure profiling cannot employ a single probe traversing the plume cross-sectional area, as in traditional isokinetic stack sampling.

Instead, the method relies on simultaneous multipoint sampling of mass concentration and airflow over the effective area of the emission plume because, unlike stack sources, both the emission rate and the airflow are nonsteady. Thus, the calculation scheme used with exposure profiling requires combining numerous measurements of concentration and airflow taken at separated points that spatially encompass the plume. An integrated value of the measurements is used to represent total mass being emitted by the source operation.

Since exposure profiling relies on ambient winds to transport the pollutant from the source to the sampling array, the measurement technique does not modify the source or affect the manner in which it would normally operate. By comparison, other measurement techniques, such as those that apply a stack sampling method, can influence material transfer emission levels because they: (a) enclose the fugitive source, and (b) actively evacuate the enclosure.

3.2 Overview of the Test Methodology

3.2.1 General Testing Guidelines

Because both the dust and wind conditions can vary over time, it is usually necessary to simultaneously sample concentration and wind speed at several points in the dust plume. In order to keep the vertical and horizontal sampler spacing manageable, it is important to operate as close to the emission source as practical. At times, it is advantageous to use "baffles" or a three-sided enclosure (a top plus two sides) to channel the dust plume to the sampling array. Importantly, because the baffle or three-sided enclosure is open at both ends, it does not in any way shield the source from ambient winds and so does not introduce any artificial control on the dust source. Instead, the baffle or enclosure merely serves to better define the effective area of the plume.

For most sources, a test program used a multi-point, two-dimensional array of sampling points to define the effective area and fully characterize the concentration profile. Specific equipment deployments for this testing program are discussed below and the quality assurance/quality control procedure results are included in Appendix B. Appendix B presents the QA/QC activities undertaken and results obtained during the field program (including filter blanks, sampler calibrations, etc). Because the method relied on ambient winds to transport PM from the source to the sampling array, it is important that the winds remained within an acceptable range and direction over the expected duration of the tests. For this testing program, the acceptable wind speed range extended from 2 to 20 mph, and the wind direction could vary within ? 45 degrees of perpendicular to the measurement plane in which the samplers were deployed. Testing would have be suspended if winds had become strong enough to stir up dust from surrounding areas. Testing was suspended in at least one instance when rainfall occurred during equipment setup. Criteria for terminating or suspending a test are given in Table A-4 in Appendix A.

Because the 1995 NGFF research determined that no significant differences in emissions exist among grains and oilseeds under normal operating conditions, no special effort was made to allocate a specific number of tests to any type of grain or oilseed, i.e., testing was conducted with the grains or oilseeds being loaded or unloaded at the time of the test. However, the testing program included the three major grains and oilseeds handled and exported from the United States—corn, wheat and soybeans.

3.2.2 Air Sampling and Ancillary Equipment

The primary airborne PM sampling device in the program was a cyclone preseparator positioned over a high-volume air sampler (Figure 1). A volumetric flow controller was used to ensure that the sample operates at a steady flow rate. When operated at 40 actual cubic feet per minute (acfm), the cyclone exhibits a cutpoint of approximately 10 microns in aerodynamic (i.e., based on particle density of 1 g/cm^3) diameter (? mA) [6]. The cyclone thus collected a sample associated with PM-10 on an 8 in. by 10 in. glass fiber filter. To determine the particulate matter concentration, the collected mass was weighed and the results divided by the total air volume sampled.

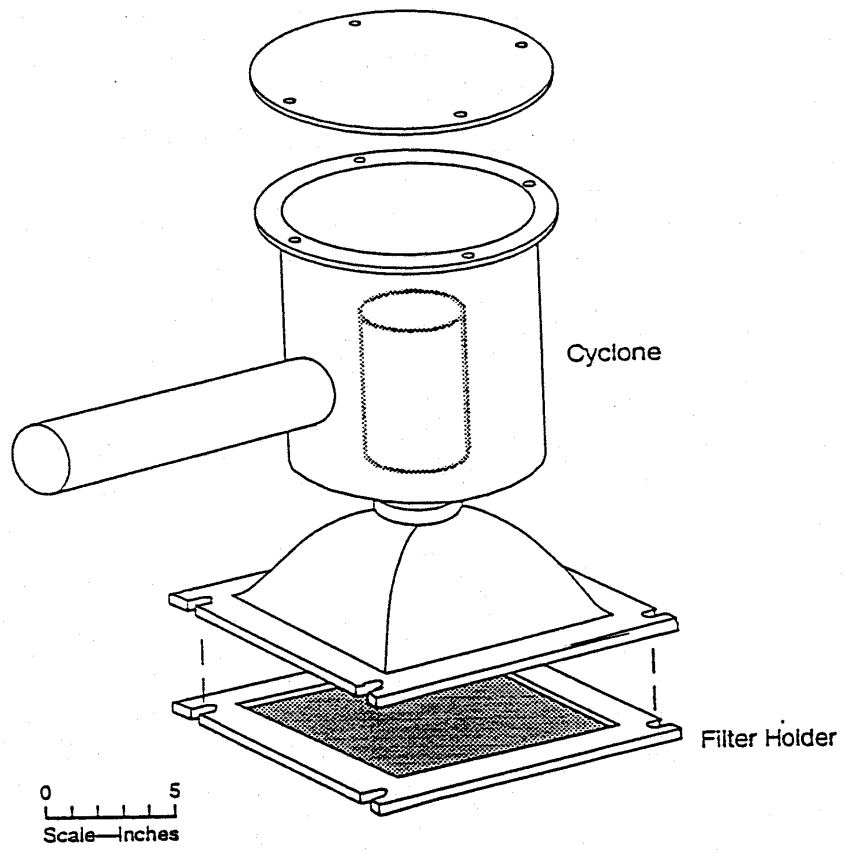

Figure 1. Cyclone Preseparator (40 acfm)

To determine particle size data, a second sampling system was used to supplement the mass exposure profiling system described above. The second system also used a high-volume cyclone preseparator but in a different sampling configuration. Here, the cyclone was operated at a flow rate of 20 acfm over a 3-stage cascade impactor (Figure 2). At that flow rate, the cyclone and three stages exhibit D_{50} cutpoints of 15, 10.2, 4.2, and 2.1 ? mA. Particulate matter was collected on 4- by 5-in glass fiber impactor substrates and the 8- by 10-in glass fiber backup filter. To reduce particle "bounce" through the impactor, the substrates were sprayed with a grease solution that improves the adhesion of the impacted particles. Greased substrates provide better definition of the particle size distribution, because the improved adhesion prevents migration of particles toward the backup filter (which would bias the measurement toward the smaller size ranges).

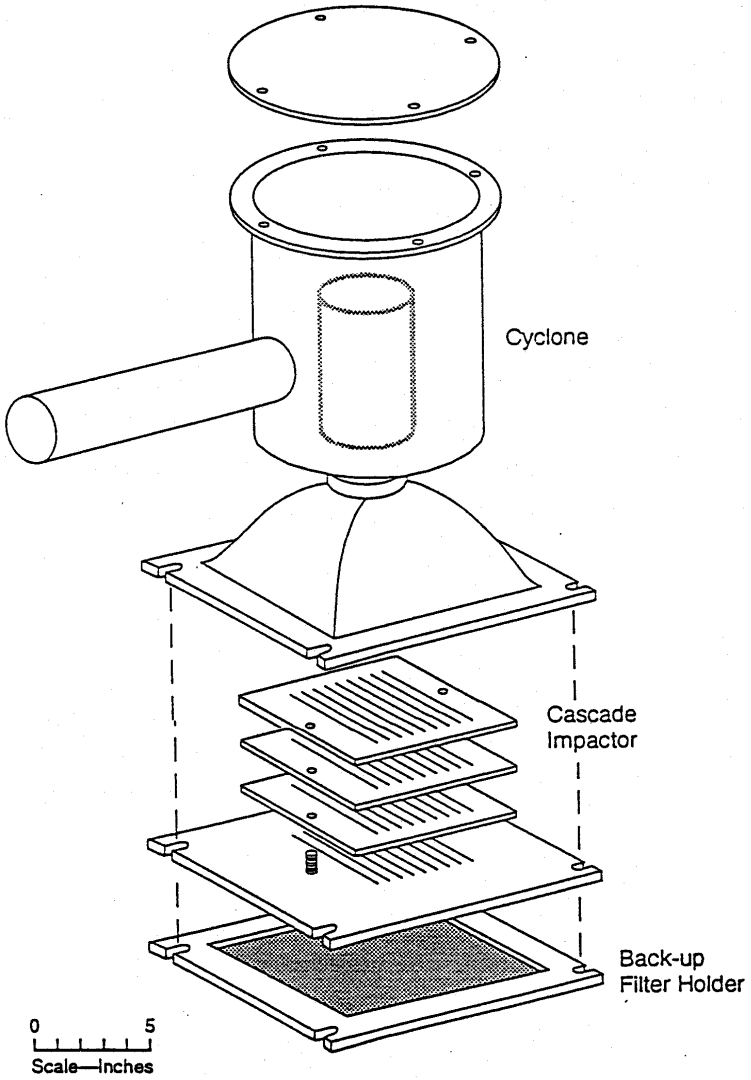

Figure 2. Cyclone Preseparator/3-Stage Cascade Impactor (20 acfm)

In either sampling system, the cyclone was cleaned after every sampling period with distilled water and then dried with a clean, lint-free wipe.

Finally, a PM-10 sampler[†] was deployed to measure background (upwind) concentrations in the immediate vicinity of the tested sources. This device also employed a volumetric flow controller to maintain a steady flow rate of 40 acfm and collected a PM-10 sample on an 8 in. by 10 in. filter. For safety reasons during the field program, the background sampler was not deployed on the barge or ship. Instead, the background sampler was located on the riverbank or dock in an area removed from any potential sources of PM (such as unpaved roads or material transfer points). Furthermore, because of the lower PM-10 concentration levels present upwind of the source, the background sampler needed to operate longer than the other samplers in order to collect adequate mass on the filter. As a practical matter, the upwind (background) sampler was started each day that held the promise for successful field testing and was allowed to operate until all source tests had been completed that day.

In addition to the air sampling equipment, the exposure profiling method requires anemometers to measure airflow past the samplers. The following two types of anemometers were used:

?? R. M. Young Gill-type (Model 27106) anemometers were deployed at two heights to determine the wind profile. In addition to these two fixed-axis anemometers, an R. M. Young portable wind station (Model 05305) was used to record wind speed and direction at the 3.0 m height downwind. All wind data were accumulated into 5-min averages logged with a 26700 series R. M. Young programmable translator.

?? The second anemometer type was the Davis vane anemometer. Compared to the Gill anemometer, this device's compact size allowed easier and safer deployment when only limited space was available. Unlike the Gill anemometer, the Davis vane does not provide a direct reading for wind speed. Instead, it is a contact anemometer which measure the total linear passage of wind past the device. By timing the measurement period, the average wind speed is determined by dividing the total passage by the elapsed time.

3.3 Data Analysis

(Example calculations are presented in Appendix D.)

[†] The test plan originally called for a Wedding and Associates reference method PM-10 sampler to be used at the background location. A cyclone preseparator sampler (Figure 1) was substituted because of limited space available and options to secure the device in a background (upwind) location. This represents an insignificant deviation from (and, in fact, an improvement to) the test plan in that both upwind and downwind concentrations were collected by identical devices.

A conservation of mass approach was used to determine the emission factor. The net particulate flux represents net passage of mass per unit area per second (s) and was found by:

$$F = 10^{-7} (C - C_b) U$$

where:

F	=	net particulate flux (mg/cm^2-s)
C	=	concentration measured (? g/m^3)
C_b	=	background concentration (? g/m^3)
U	=	mean wind speed (m/s)

Because flux was measured at individual points, it was necessary to integrate the flux over the effective cross-sectional area of the plume to determine the total mass (M) emitted. The integration procedure differed depending upon what sampling array was used.

For example, the dust plume area for barge loading in this program was defined by an enclosure. Whether one or several samplers were used to sample over a rectangular effective area, the mass M emitted was found by:

$$M = \overset{n}{\underset{i=1}{?}} A_i \; F_i \; t_i$$

where:

M	=	particulate mass emission (mg)
n	=	number of samplers used
F_i	=	particulate flux (mg/cm^2 -s) measured by sampler "i"
A_i	=	area (cm^2) of measurement plane sampled by "i"
t_i	=	duration of sampling for sampler "i"

On the other hand, if the effective area was not entirely defined by an enclosure, a different integration scheme was needed to determine the mass emitted. In this case,

$$M = \overset{H}{\underset{0}{?}} \; \overset{R}{\underset{L}{?}} F_i \; t_i \; dy \; dz$$

where all variables are the same as before and:

H	=	effective height (cm) of the plume
L	=	left-hand extent (cm) of the plume
R	=	right-hand extent (cm) of the plume
z	=	height (cm) above hatch coaming[‡]

[‡] "Coaming" refers to the raised border (sidewall) of a ship hold or barge compartment that is above the deck or walkway on vessels and barges.

y = crosswind horizontal distance (cm) measured from center of sampling array

For barge unloading, the barge hopper sides defined the left-hand and right-hand extents. Similarly, because emissions during vessel loading originated within the hold, the hold's crosswind dimension defined the horizontal extent.

Because flux values were measured at discrete points within the plume, a numerical integration scheme was necessary. The integration over the horizontal dimension (y) was performed first. The horizontal integration was found by multiplying the average exposure value at a particular height by the horizontal extent of the source[§]. Thereafter, the partial results (so-called "crosswind exposures") were integrated over height (z).

To begin the vertical integration, a plume height was determined for each vertical array by extrapolating the net concentration to a value of zero.[**] Next, the two or three plume heights were averaged to obtain an effective plume height H. The vertical integration was then performed in the manner illustrated in Figure 3. The shaded area in the figure represents M, the total mass of particulate emissions passing through the measurement plane.

Dividing M by the amount of grain handled yields the emission factor in terms of pounds emitted per ton of grain handled. Facility personnel determined the amount of grain handled during an individual test.

[§] This represents a technical deviation from the test plan. The test plan (Appendix A) contains a hypothetical example calculation, in which it was assumed that the emission source plume could not be physically bounded at the measurement plane. However, during all barge unloading and vessel loading tests, the sampling array was positioned at the immediate downwind edge of the source where the plume was physically bounded by the sides of the hold or barge. Thus sampling was performed at a point before the emissions could spread beyond the physical dimensions of the source. Although a technical deviation, the modification is an improvement over the plan because the actual field placement of the sampling array allowed better definition of the emission source.

[**] In those instances when the net concentration did not decrease with height, the plume height was conservatively set equal to 70 ft or 64 ft for vessel loading and barge unloading, respectively, which represent the 90 percentile of the plume heights determined by extrapolation of the net concentrations.

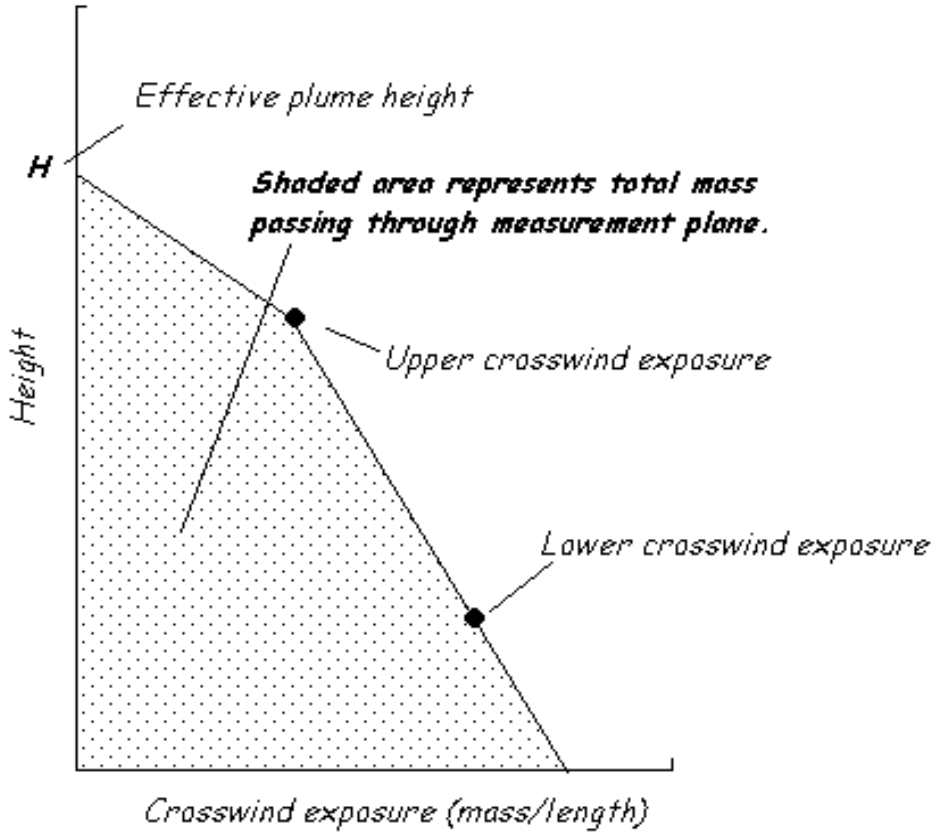

Figure 3. Integration Scheme for Vessel Loading and Barge Unloading Tests

Section 4.
Test Results

This section reports the results from the field testing program. Sixty emission tests were conducted during November and December 2000. Appendix E contains detailed data from the emission tests.

Prior to the beginning of the testing program, a meeting with key facility personnel was held to: (1) explain the purpose of the test program; (2) discuss the strategy for obtaining data on material loaded or unloaded during a specific test; (3) discuss the sampling protocol; (4) establish the means for effective communications between facility personnel and testing crew; (5) review requirements related to positioning equipment for testing; and (6) discuss other coordination and logistical issues that might arise. Facility personnel also briefed the testing crew on facility safety rules and required safety equipment prior to testing.

Throughout the testing program, cooperation by facility personnel was excellent and helped ensure that testing was performed in a safe, timely, and sound manner. Close communication was maintained between MRI and facility operations staff to coordinate the timing of tests and operation of sampling equipment. During barge unloading and vessel loading, facility personnel provided the weight of the grain loaded/unloaded during a test. For barge loading, facility personnel provided information on the amount of material loaded based on physical measurements of grain in a facility storage bin and/or system operations and capacity.

Table 5 presents the upwind (background) PM-10 concentrations measured during the field program. Upwind sampling generally lasted between 4 and 9 hr. The minimally detectable (with a confidence level of 95%) upwind PM-10 concentration is found to be approximately 3 ? g/m^3, based on the following:

?? The average blank value (0.43 mg) plus two times the standard deviation (0.41 mg) of the blank filters. (Blank filter results are given in Appendix E.) This produces a value of 0.43 + 2 (0.41) = 1.25 mg.

?? A nominal sampling rate of 40 cfm

?? A nominal sampling duration of 6 hr

Table 5. Upwind (Background) PM-10 Concentrations

Date	Test runs	Start time	Stop time	Sampling Duration (min)	Background concentration (?g/m^3)
11/7/00	DD-1 to 6	–[a]	–[a]	–[a]	–[a]
11/8/00	DD-101 to 103	9:22	16:16	414	497
11/9/00	DD-104 to 106	8:40	12:23	224	4800[b]
11/10/00	DD-11 to 12	16:38	21:31	293	126
11/11/00	DD-13 to 14	8:40	17:40	540	121
11/12/00	DD-111 to 116	10:37	18:00	443	44
11/13/00	DD-17 to 18	12:47	19:42	415	20
11/15/00	DD-121 to 123	9:09	17:25	496	36
11/19/00	DD-21 to 26	12:40	21:07	507	18
11/20/00	DD-27 to 29	10:06	16:03	357	62
11/29/00	DD-201 to 212	9:55	15:20	325	18
12/2/00	DD-221 to 232	7:57	15:50	473	173

[a] Upwind sampler never started because of welding in immediate vicinity. No background concentration applied to tests DD-1 through DD-6. Results for those tests are thus conservatively high.

[b] A conveyor was started up after deployment. Material dropping from the conveyor resulted in a very high concentration that was not representative of conditions immediately upwind of the barge. The previous day's upwind concentration was applied to tests DD-104 to 106.

Table 5 shows that all background concentrations are far above the minimally detectable level, and a high degree of confidence can be ascribed to the measurements.

4.1 Vessel Loading Operations

Figure 4 illustrates the generalized sampler deployment used to test vessel-loading emissions. A two-dimensional sampling array of 40-acfm cyclones was used to characterize PM-10 mass flux across the measurement plane. The measurement plane was placed perpendicular to the expected wind direction at the downwind edge of the ship hold.

The measurement plane also contained a centrally located 20-acfm cyclone/impactor as well as two Gill anemometers. The R. M. Young wind station was deployed at a height of approximately three meters in the immediate vicinity of the source to record wind direction. Photo 6 in Appendix C shows the typical sampling array setup during vessel testing.

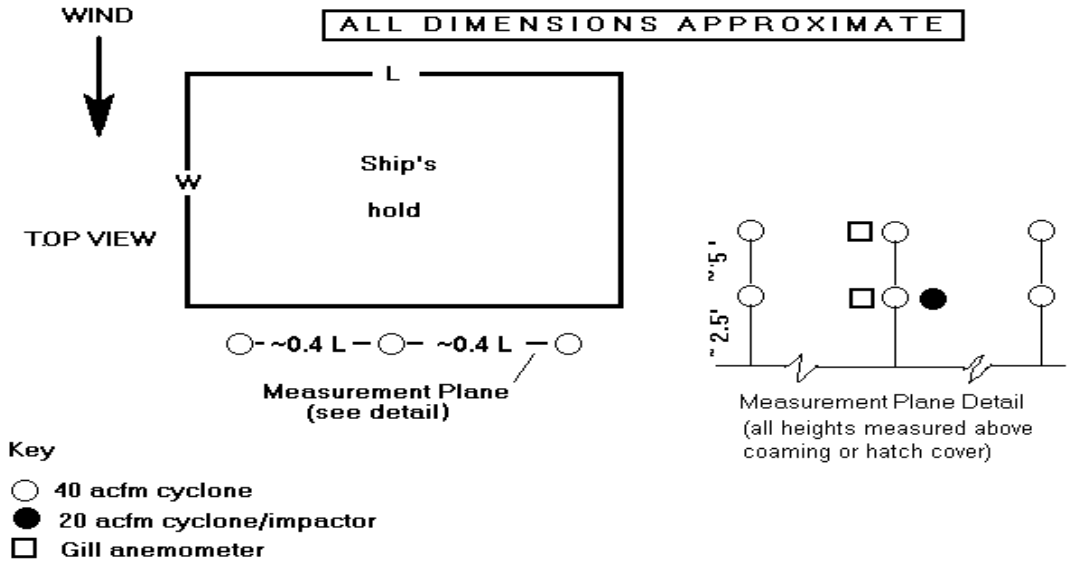

Figure 4. Equipment Deployment for Vessel (Ship) Loading Tests

Using the same assumptions given above with a mean sampling duration of 17 min, a minimally detectable (95% confidence level) PM-10 concentration for the vessel loading tests was determined as 65 ? g/m^3. All measured concentrations (Appendix E) during the vessel loading tests were at least 2.5 times the minimally detectable level.

Table 6 reports the test results from twenty-one separate tests of dust emissions during ship loading. Twelve tests were conducted with vertical spouts and nine tests were conducted with sloped spouts. As noted in Table 6, tests included corn, wheat, and soybeans.

4.1.1 Barge Unloading Operations

To test barge-unloading emissions, a 2-dimensional sampling array was positioned along the bow or stern of the barge. Figure 5 shows generalized end elevation and top views of the sampling arrangement. Four 40-acfm cyclone pre-separators were deployed in a symmetric pattern between the side walls of the barge unloading station to collect PM-10 samples for each test. In addition, a single 20-acfm cyclone/impactor was operated over the PM-10 emission test equipment to collect PM-2.5 data. Because of the limited space available, two Davis vane anemometers were deployed at the same heights as the PM-10 samplers to measure wind speed.

Table 6. PM-10 Emission Factors—Vessel (Ship) Loading

Run	Date	Duration (min)	Operation	Grain	Tons loaded	PM-10 emission factor (lb/ton)
DD-1	11/7/00	10.00	Vertical Spout	Corn	140	0.00060
DD-2	11/7/00	21.00	Vertical Spout	Corn	420	0.00038
DD-3	11/7/00	23.00	Vertical Spout	Wheat	390	0.031
DD-4	11/7/00	12.00	Vertical Spout	Wheat	210	0.017
DD-5	11/7/00	13.50	Vertical Spout	Wheat	270	0.019
DD-6	11/7/00	9.00	Vertical Spout	Wheat	240	0.015
DD-11	11/10/00	13.50	Vertical Spout	Corn	151	0.0058
DD-12	11/10/00	21.00	Vertical Spout	Corn	235	0.0039
DD-13	11/11/00	15.50	Vertical Spout	Corn	347	0.00010
DD-14	11/11/00	7.25	Vertical Spout	Corn	162	0.00039
DD-17	11/13/00	15.00	Vertical Spout	Corn	175	0.0020
DD-18	11/13/00	15.00	Vertical Spout	Corn	175	0.022
DD-21	11/19/00	15.00	Sloped spout	Soybeans	217	0.0051
DD-22	11/19/00	12.75	Sloped spout	Soybeans	119	0.0056
DD-23	11/19/00	22.75	Sloped spout	Soybeans	277	0.0071
DD-24	11/19/00	16.00	Sloped spout	Soybeans	183	0.016
DD-25	11/19/00	13.50	Sloped spout	Soybeans	200	0.018
DD-26	11/19/00	17.50	Sloped spout	Soybeans	229	0.014
DD-27	11/20/00	18.00	Sloped spout	Soybeans	267	0.021
DD-28	11/20/00	12.00	Sloped spout	Soybeans	245	0.026
DD-29	11/20/00	14.00	Sloped spout	Soybeans	100	0.019
					Average	**0.012**

Test sites were selected with fenders or a second barge line that would effectively channel the wind toward the sampling array. Furthermore, the barge hopper walls themselves channeled the plume toward the sampling array. Photo 7 in Appendix C illustrates the sampling array setup used during barge unloading testing.

Using the same assumptions given above with a mean sampling duration of 7 min, a minimally detectable (95% confidence level) PM-10 concentration for the barge unloading tests was determined as 160 ? g/m^3. All concentrations measured during the barge unloading tests (see Appendix E) were at least three times the minimally detectable level.

Table 7 reports the test results from barge unloading. The final test program included fifteen separate tests of barge unloading emissions. There were twelve tests with CBU equipment and three tests with marine leg unloading equipment. Tests included corn and soybeans.

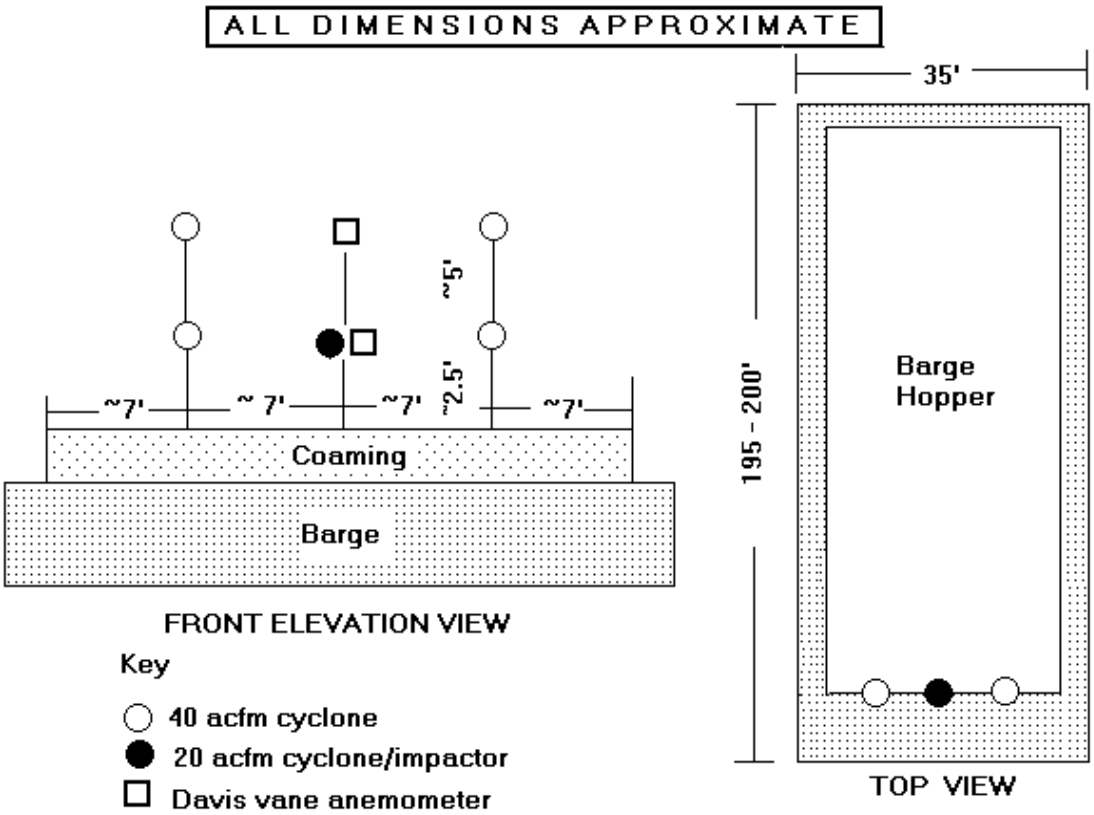

Figure 5. Sampling Deployment for Barge Unloading Tests

Table 7. PM-10 Emission Factors—Barge Unloading

Run	Date	Duration (min)	Operation	Grain	Tons unloaded	PM-10 emission factor (lb/ton)
DD-101	11/8/00	10.50	CBU	Corn	291	0.00058
DD-102	11/8/00	10.75	CBU	Corn	203	0.00020
DD-103	11/8/00	10.25	CBU	Corn	176	0.0030
DD-104	11/9/00	14.50	CBU	Corn	237	0.0040
DD-105	11/9/00	11.25	CBU	Corn	253	0.0013
DD-106	11/9/00	6.75	CBU	Corn	144	0.0074
DD-111	11/12/00	5.00	CBU	Soybeans	136	0.038
DD-112	11/12/00	4.50	CBU	Soybeans	99	0.015
DD-113	11/12/00	5.50	CBU	Soybeans	152	0.0047
DD-114	11/12/00	5.50	CBU	Soybeans	239	0.0082
DD-115	11/12/00	10.25	CBU	Soybeans	209	0.0036
DD-116	11/12/00	7.25	CBU	Soybeans	363	0.00074
					Average	**0.0073**
DD-121	11/15/00	2.50	Marine leg	Soybeans	52	0.057
DD-122	11/15/00	2.50	Marine leg	Soybeans	43	0.018
DD-123	11/15/00	2.50	Marine leg	Soybeans	58	0.038
					Average	**0.038**

4.1.2 Barge Loading Operations

In order to test emissions from barge loading, a three-sided enclosure (two sides and a top) was placed over the open barge flip top door (see Figure 6). The channel was made with tarps and a lightweight frame for easy assembly/disassembly. Each channel was open to the wind and had a rectangular cross-sectional area of approximately 5 ft x 7 ft. Because of the small cross-sectional area, a single (20 acfm) cyclone/impactor sampler was positioned at the center of each channel. In this way, particle size data were collected for each test of barge loading. Because of the limited space available, a Davis vane anemometer was used to measure airflow near the center of the opening.

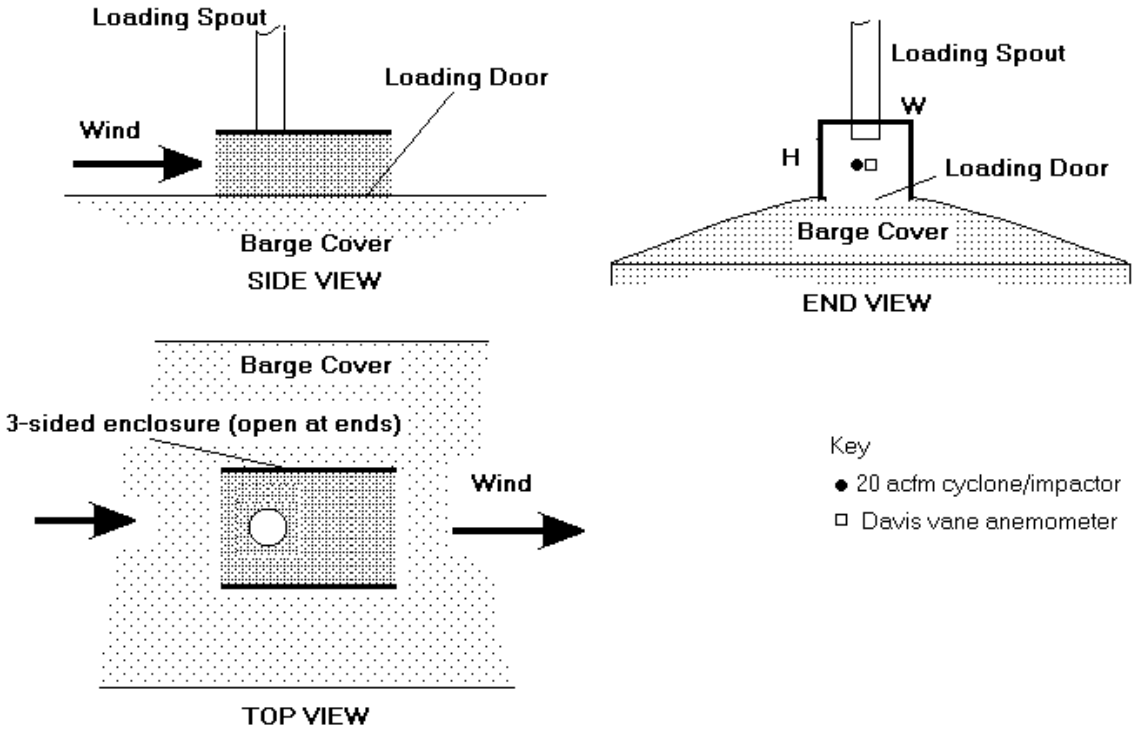

Figure 6. Sampling Equipment Deployment for Barge Loading Tests

A minimally detectable (with a confidence level of 95%) PM-10 concentration for the barge loading tests was determined as 660? g/m^3, based on the following:

?? The average blank value (0.43 mg) plus two times the standard deviation (0.41 mg) of the blank filters. This produces a value a value of 0.43 + 2(0.41) = 1.25 mg. for the backup filter. (Filter and substrate blanks are given in Appendix E.)

?? The average blank value impaction (0.24 mg) plus two times the standard deviation (0.31 mg) for the blank substrates. This produces a value a value of 0.24 + 2(0.31) = 0.86 mg for each of two impactor substrates. This, plus the value for the backup filter, produces a mass of 2(0.86) + 1.25 = 2.97 mg.

?? A nominal sampling rate of 20 cfm

?? An average sampling duration of 8 min

All PM-10 concentrations measured during the barge loading tests (see Appendix E) were at least an order of magnitude greater than the minimally detectable level.

Table 8 reports the PM-10 test results from barge loading. Photo 8 in Appendix C illustrates the general sampling array during barge loading testing. Soybeans and corn were included in the test program.

Table 8. PM-10 Emission Factors—Barge Loading

Run	Date	Duration (min)	Loading cycle	Grain	Tons loaded	PM-10 emission factor (lb/ton)
DD-201	11/30/00	11.75	Start	Soybeans	54	0.00051
DD-202	11/30/00	9.75	Start	Soybeans	51	0.0018
DD-203	11/30/00	8.00	Start	Soybeans	66	0.00075
DD-204	11/30/00	11.00	Start	Soybeans	81	0.00053
DD-205	11/30/00	11.25	Middle	Soybeans	63	0.0034
DD-206	11/30/00	7.25	Middle	Soybeans	42	0.0044
DD-207	11/30/00	7.75	Middle	Soybeans	54	0.0088
DD-208	11/30/00	7.25	Middle	Soybeans	51	0.0063
DD-209	11/30/00	15.00	End	Soybeans	42	0.0029
DD-210	11/30/00	8.50	End	Soybeans	54	0.0088
DD-211	11/30/00	6.25	End	Soybeans	36	0.012
DD-212	11/30/00	7.75	End	Soybeans	54	0.0070
DD-221	12/2/00	10.50	Start	Corn	56	0.00065
DD-222	12/2/00	6.75	Start	Corn	70	0.00060
DD-223	12/2/00	7.50	Start	Corn	53	0.0017
DD-224	12/2/00	3.00	Start	Corn	23	0.00073
DD-225	12/2/00	7.50	Middle	Corn	40	0.0013
DD-226	12/2/00	5.75	Middle	Corn	43	0.0012
DD-227	12/2/00	6.00	Middle	Corn	44	0.0025
DD-228	12/2/00	4.00	Middle	Corn	31	0.0012
DD-229	12/2/00	7.25	End	Corn	30	0.0059
DD-230	12/2/00	7.00	End	Corn	27	0.0088
DD-231	12/2/00	7.00	End	Corn	30	0.0083
DD-232	12/2/00	7.75	End	Corn	36	0.0058
					Average	**0.0040**

Section 5.
Discussion of PM-10 Results

5.1 Analysis

This section discusses the PM-10 results obtained during the field testing portion of the project and provides recommended PM-10 emission factors for Section 9.9.1 of AP-42.

The research results indicate that the PM-10 emission rates for different grains are similar under field conditions. This is consistent with the results reported in the 1995 NGFF study and support combining these data into one emission factor. Furthermore, the distribution of the data is consistent with published literature that suggests that fugitive dust emission factors generally follow a lognormal distribution. As a result, use of an arithmetic mean provides a conservatively high value for the emission factor.

The next step was to explore whether any variation in PM-10 emission factors could be attributed to differences in source conditions. An evaluation of the log-transformed data for the three operations tested suggests:

?? **Ship Loading:** There was no statistically significant difference in PM-10 emissions between sloped and straight spouts at the 5% level of significance. In addition, there was no discernible trend for PM-10 emissions to vary as the hold filled during the loading cycle or to vary with loading rate—corn appeared to produce increased emissions at higher loading rates, but soybeans showed the opposite trend.

?? **Barge Unloading:** The PM-10 emissions between the marine leg and CBU were statistically different at the 5% level of significance. However, there was no clearly discernible trend for emissions to increase or decrease as the barge unloading cycle progressed.

?? **Barge Loading:** The data suggest that PM-10 emissions increased as loading progressed. This is not surprising since (a) the empty volume under the barge cover that can act as a settling chamber decreases and (b) the displaced air becomes more dust-laden as loading progresses. However, this does not mean that mass emitted increased throughout the loading cycle. Because the grain spreads out to fill the barge, less grain is loaded through the last few doors than through the first few doors; thus, application of an average PM-10 emission factor throughout the entire loading cycle will produce conservatively high estimates of the PM-10 mass emitted.

5.2 Recommendation

Based upon the field emission results obtained recommended PM-10 emission factors are presented in Table 9:

Table 9. Recommended Uncontrolled PM-10 Emission Factors

Operation	PM-10 emission factor (lb/ton)	Basis for factor
Barge Loading		
	0.0040	Arithmetic mean of 24 tests
Barge Unloading		
?? CBU	0.0072	Arithmetic mean of 12 tests
?? Marine Leg	0.038	Arithmetic mean of 3 tests
Vessel Loading	0.012	Arithmetic mean of 21 tests

Note that the recommended values are based on an arithmetic averaging of the test results, which provides a conservative mean for log normally distributed data.

Section 6.
Results for PM-2.5

In addition to PM-10 emissions, the test plan also addressed gathering data on PM-2.5 emissions for barge and vessel operations. Because the barge loading test protocol (Figure 6) called for a cyclone/3-stage impactor combination during testing, size data for both fractions were obtained during each individual run. This permitted the direct calculation of both a PM-10 and a PM-2.5 emission factor for each barge loading test. As a result, there is a one-to-one correspondence between the PM-10 and PM-2.5 emission tests for barge loading.

On the other hand, the test protocol for vessel loading (Figure 4) and barge unloading (Figure 5) called for collecting PM-2.5 emission data at one location while PM-10 data were gathered at several locations in the plume. In addition, the cyclone/impactor collecting PM-2.5 emissions data was operated over several tests of PM-10 emissions from vessel and barge unloading operations (i.e., the equipment was shut down after the first PM-10 test in a series and restarted with the same collection media for subsequent tests). For these tests, a PM-2.5 to PM-10 ratio was developed that can be used to scale PM-10 emissions to PM-2.5 emissions.

The PM-2.5 data are presented in Tables 10, 11, and 12. In keeping with the discussion, above, Table 10 presents PM-2.5 emission factors as well as measured PM-2.5/PM-10 ratios for the barge loading tests. Tables 11 and 12 present the PM-2.5 /PM-10 emission ratios measured during the series of ship loading and barge unloading tests, respectively.

Table 13 presents recommended PM-2.5 emission factors for the tested operations as well as the basis for the recommended factors. The basis for recommended PM-2.5 value for barge loading is directly comparable to that for PM-10 (in Table 9) in that it is an arithmetic average of the 24 emission tests. For the other operations, operation-specific PM-2.5/PM-10 ratios have been used to scale the Table 9 PM-10 emission factors. In each case, because arithmetic averaging was used , the PM-2.5 factors in Table 13 are conservatively high.

Even though operation-specific PM-2.5/PM-10 ratios are used in Table 13, the particle size data overall do not exhibit significant statistical differences. Table 14 presents average PM-2.5/PM-10 ratios for the different operations. These data indicate that an overall value of 0.17 can be applied “across the board” to give reliable PM 2.5 emission factors for grain handling operations in general.

Table 10. PM-2.5 Emission Factors—Barge Loading

Run series	Point in loading cycle	Grain	PM-2.5 / PM-10 ratio	PM-2.5 emission factor (lb/ton)
DD-201	Start	Soybeans	0.313	0.00016
DD-202	Start	Soybeans	0.192	0.00034
DD-203	Start	Soybeans	0.205	0.00015
DD-204	Start	Soybeans	0.209	0.00011
DD-205	Middle	Soybeans	0.150	0.00051
DD-206	Middle	Soybeans	0.158	0.00069
DD-207	Middle	Soybeans	0.169	0.0015
DD-208	Middle	Soybeans	0.152	0.00096
DD-209	End	Soybeans	0.158	0.00045
DD-210	End	Soybeans	0.149	0.0013
DD-211	End	Soybeans	0.141	0.0017
DD-212	End	Soybeans	0.141	0.00099
DD-221	Start	Corn	0.184	0.00012
DD-222	Start	Corn	0.215	0.00013
DD-223	Start	Corn	0.144	0.00024
DD-224	Start	Corn	0.210	0.00015
DD-225	Middle	Corn	0.143	0.00018
DD-226	Middle	Corn	0.144	0.00017
DD-227	Middle	Corn	0.113	0.00028
DD-228	Middle	Corn	0.130	0.00015
DD-229	End	Corn	0.096	0.00057
DD-230	End	Corn	0.094	0.00083
DD-231	End	Corn	0.099	0.00083
DD-232	End	Corn	0.113	0.00066
		Average	**0.16**	**0.00055**

[a] Tests DD- 201 through DD-212 were conducted at a Louisiana barge loading facility while test DD-221 through DD-232 were conducted at a Missouri barge loading facility.

Table 11. PM-2.5/PM-10 Ratios—Ship Loading

Test series	Equipment	Grain	PM-2.5/PM-10 ratio
DD-1, 2	Vertical Spout	Corn	0.247
DD-3, 4	Vertical Spout	Wheat	0.130
DD-5, 6	Vertical Spout	Wheat	0.163
DD-11,12	Vertical Spout	Corn	0.115
DD-13,14	Vertical Spout	Corn	0.384
DD-17,18	Vertical Spout	Corn	0.080
DD-21,22,23	Sloped spout	Soybeans	0.117
DD-24,25,26	Sloped spout	Soybeans	0.146
DD-27,28	Sloped spout	Soybeans	0.258
		Average	**0.18**

Table 12. PM-2.5/PM-10 Ratios—Barge Unloading

Test Series	Equipment	Grain	PM-2.5 / PM-10 ratio
DD-101,102,103	CBU	Corn	0.279
DD-111	CBU	Soybeans	0.351
DD-114,115	CBU	Soybeans	0.164
DD-121,122	Marine leg	Soybeans	0.133
		Average	**0.23**

Table 13. Recommended Uncontrolled PM-2.5 Emission Factors

Operation	PM-2.5 emission factor (lb/ton)	Basis for factor
Barge Loading	0.00055	Arithmetic mean of 24 tests in Table 10
Barge Unloading		
?? CBU	0.0019	Mean PM-2.5/PM-10 value (0.26) for CBU tests in Table 12 applied to Table 9 factor
?? Marine Leg	0.0050	PM-2.5/PM-10 value (0.133) for marine leg tests in Table 12 applied to Table 9 factor
Vessel Loading	0.0022	Overall mean PM-2.5/PM-10 value (0.18) in Table 11 applied to Table 9 factor

Table 14. Summary PM-2.5/PM-10 Ratios

Operation	No. of cases	PM-2.5/PM-10
Barge Loading	24	0.16
Barge Unloading	4	0.23
Vessel Loading	9	0.18
All Operations	37	0.17

Section 7.
References

1. *Compilation of Air Pollutant Emission Factors.* AP-42. Fifth Edition. U. S. Environmental Protection Agency, Research Triangle Park, NC, January, 1995.
2. Midwest Research Institute. "Emission Factors for Grain Elevators," EPA Contract MRI Project No. 3889 and 4672. Prepared for National Grain and Feed Foundation, Midwest Research Institute, January, 1997.
3. Midwest Research Institute. "Tests of Oil Suppression of PM-10 at Grain Elevators," EPA Contract No. 68-D2-0165, Work Assignment 2-32, November, 1994.
4. Midwest Research Institute. "PM-10 Test Strategies for Grain Elevators," EPA Contract No. 68-D2-0165, Work Assignments 1-30 and 2-32, January, 1995.
5. *Technical Procedures for Developing AP-42 Emission Factors and Preparing AP-42 Sections.* EPA-454/B-93-050. Office of Air Quality Planning and Standards, U. S. Environmental Protection Agency, Research Triangle Park, NC, October, 1993.
6. Baxter, T. E., et al. "Calibration of a Cyclone for Monitoring Inhalable Particulates," *Journal of Environmental Engineering. 112(3), 468. 1986.*

Appendix A
Test Plan

Emission Factors for Barges and Marine Vessels

Revised Test Plan

For National Grain and Feed Association

MRI Project No. 310012.1.001

April 25, 2000

Emission Factors for Barges and Marine Vessels

Revised Test Plan

For National Grain and Feed Association
1201 New York Avenue, NW
Washington, DC 20005

Attn: Thomas O'Connor

MRI Project No. 310012.1.001

April 25, 2000

Preface

This plan describes an emission field testing program to be conducted by Midwest Research Institute under a contract with the National Grain and Feed Association (NGFA). The plan has been submitted to the U. S. Environmental Protection Agency's Office of Air Quality Planning and Standards for review and comment. Mr. Thomas O'Connor is NGFA's program manager. Dr. Gregory E. Muleski serves as MRI's project leader and authored this report.

Approved:

Paul C. Constant, P.E.
Acting Director
Applied Engineering

April 25, 2000

Contents

Preface ii
Figures iv
Tables iv

Section 1. Introduction 1

Section 2. Test Matrix and Site Selection 4
2.1 Development of Test Matrix 4
2.2 Test Site Selection 6

Section 3. Test Methodology 9
3.1 General Description of Exposure Profiling 9
3.2 Overview of the Test Methodology 10
3.3 Application of Exposure Profiling to Barge/Vessel Operations 14
3.4 Data Analysis 18

Section 4. Test Site Logistics and Schedule 22

Section 5. References 23

Appendices

Appendix A—Quality Assurance/Quality Control Procedures
Appendix B—Example Calculation

Figures

Figure 1. Cyclone Preseparator (40 acfm) 12
Figure 2. Cyclone Preseparator/Cascade Impactor (20 acfm) 13
Figure 3. Sampling Deployment for Barge Loading Tests 15
Figure 4. Sampling Deployment for Barge Unloading Tests 17
Figure 5. Sampling Equipment Deployment for Ship Loading Tests.....19

Tables

Table 1. Preliminary Overall Test Matrix.....7
Table 2. Preliminary Barge Loading Test Matrix.....7
Table 3. Preliminary Barge Unloading Test Matrix 8
Table 4. Preliminary Ship Loading Test Matrix 8

Section 1.
Introduction

At present, the U. S. Environmental Protection Agency's (EPA's) guidance document *Compilation of Air Pollutant Emission Factors* (commonly referred to as "AP-42") [1] does not contain any emission factors referenced to barge and marine vessel operations. This plan describes a field-testing program to develop particulate matter (PM) emission factors for grain handling operations involving barges and marine vessels (ships). The primary pollutant of interest is particulate matter no greater than 10 microns in aerodynamic diameter (PM-10), which forms the regulatory basis for a National Ambient Air Quality Standard for particulate matter. In additional preliminary plans include collecting some "PM-2.5" data (particulate matter no greater than 2.5 microns in aerodynamic diameter) to find the relationship of PM-2.5 to PM-10 for future information.

The field program described in this plan applies the same measurement methodology used in earlier field test programs at grain facilities performed for both the U.S. Environmental Protection Agency (EPA) and the National Grain and Feed Foundation (NGFF). The tests for EPA were conducted in 1994 under an Emission Measurement Center contract [2] with Midwest Research Institute (MRI). Prior to the start of testing, representatives of EPA, MRI, private industry, the Nebraska Grain and Feed Association, and the Nebraska Department of Environmental Quality met in Lincoln, Nebraska. A major focus of the meetings was formulation of general emission testing methodology that could be applied to grain elevator sources. In particular, the group sought to remove the bias toward overestimation evident in the AP-42 emission factors available at the time. Industry had expressed similar concerns through the National Grain and Feed Association (NGFA) regarding the accuracy of and characterization of emission estimates in AP-42.

The group recognized the need to distinguish between emission sources controlled with aspirated capture/collection systems and those not so equipped. For sources with aspirated systems, established EPA source testing methods can be used to determine PM concentrations from the control device. The measurements obtained using the EPA source testing methods reliably reflect (controlled) PM emitted to the ambient atmosphere.

On the other hand, control device inlet measurements do not accurately reflect emissions from uncontrolled sources because the suction applied by the control device pulls or strips additional dust from the grain stream. Thus, emission factors based on inlet measurements using EPA established testing methods suitable for control devices, are likely to be biased high for uncontrolled fugitive sources, as noted in the version of AP-42 Section 9.9.1 drafted in 1994 [3].

The group agreed that "exposure profiling" (as discussed later in this plan) represents the most appropriate and practical means to measure fugitive (i.e., non-ducted) emission

sources at bulk grain handling operations. MRI applied that test method in the subsequent "scoping" test program conducted for EPA after the Lincoln meetings. The tests (conducted in August and September 1994) considered particulate emissions generated when transferring grain onto a gallery conveyor belt during bin-to-bin transfer of stored grain [2].

After the 1994 scoping program, EPA's Emission Measurement Center instructed MRI to prepare a "generic" test plan [4] that described testing strategies to develop grain emission factors for ambient air pollution purposes. The plan included test methods selected to best characterize the uncontrolled (i.e., non-aspirated) emissions that escape the elevator building and contribute to ambient air particulate concentrations. The "generic" test plan applied the following guidelines to develop test strategies:

?? Testing will rely on the exposure profiling technique. As decided at the June 1994 meetings in Lincoln, exposure profiling represents the most appropriate means to measure fugitive (i.e., non-ducted) emission sources at elevators. Most importantly, exposure profiling attempts to sample emissions as they occur in the absence of controls. Imposing a strong draft as done in the past studies using stack sampling techniques (with air flows of 25 mph or more) to pick up dust at an emission point **enhances** the mass of material released and collected.

?? Testing of "external" sources (i.e., those open to ambient winds, such as receiving and shipping whether by truck, barge, or railcar) should rely on the wind to carry particulate from the source to the sampling array.

?? Testing of "internal" sources not open to ambient winds will focus on the particulate that escapes the building. Testing should focus on a "reasonable worst-case" so that the resulting factors represent likely upper bounds for sources without active ventilation systems.

MRI applied these "generic" test strategies in a 1995 National Grain and Feed Foundation (NGFF) field testing program [5]. The NGFF program comprised 54 tests conducted of four different grains and at three grain elevators. Testing relied on two basic equipment deployment schemes, one for 29 "external" source tests—such as receiving and shipping—and the other for the 25 "internal handling" sources. After extensive review, those tests now form the basis for almost all the emission factors (rail and truck operations and internal headhouse sources) contained in AP-42 Table 9.9.1-1.

The proposed test program discussed in this plan represents an extension of the 1995 test program, focussing now on the "external" sources related to barge and vessel operations.

Facilities located along navigable rivers load barges with grain for transfer to other river facilities including export facilities. The barges are usually covered with fiberglass or metal "fliptops" or with metal "rolltop" covers. At the export facility, the entire barge cover is removed and the grain is unloaded with a marine leg bucket elevator or a

continuous barge unloader (such as those manufactured by Heyl & Patterson, Link Belt or others).

Although several ship loading systems from different manufacturers are currently used in the industry, the major distinctions deal with which portions of the system (typically far removed from the load-out point) that are moveable. With reference to the load-out point, there are two main types of spout geometry–inclined ("sloped") spouts and vertical spouts.

The test program will develop emission factors that span typical operational conditions for barges and vessels. Testing will be conducted at several sites to include the commonly employed equipment (e.g., marine legs and continuous-barge unloaders (CBU)) used to unload barges and will consider a range of operating parameters (e.g., drop height of grain within the ship/barge hold).

The remainder of this plan is structured as follows. The overall objectives and test matrix recommended to meet those objectives are presented in Section 2. Section 3 provides an overview of the test methodology and how the approach will be applied in the test program. Section 4 discusses logistical issues and requirements for the potential test sites; a schedule is also proposed. Section 5 lists the references cited.

Section 2.
Test Matrix and Site Selection

This section discusses the overall test program in terms of the test matrix and how test sites will be selected. Details of the test methodology are presented in Section 3.

2.1 Development of Test Matrix

The objectives of the test program are to:

1. Develop scientifically defensible PM (uncontrolled) emission factors for grain handling operations involving barges and marine vessels.

2. Explore the effect that the following different operational features have on emission levels:

   ?? varying height of grain during the loading cycle
   ?? different types of ship loading and barge unloading equipment

3. Collect information on the size distribution of PM emissions from barge/vessel operations.

The test matrix presented later in this section is based on certain guidelines. **Overall guidelines** applicable to each source operation of interest include:

?? A test program following general guidelines [6] for AP-42. Testing is to be done for uncontrolled sources. Thus, during test periods, control devices are to be deactivated.

?? A test program that will span common ranges of loading and unloading practices and equipment.

?? A test program designed to identify potential differences in emissions during the loading/unloading cycles.

?? Replicate tests.

For **barge loading** in particular, it is important that testing take into account the following features:

?? Sites along the upper and lower Mississippi River system should be tested to account for any operational differences that might occur due to river heights or conditions.

?? Testing of barge loading emissions should focus on “fliptop” barges. “Rolltops” constitute a relatively small (and declining) fraction of barge covers in use. Roll top barges are no longer manufactured for use in the grain industry due to their higher cost and operational and safety concerns. Furthermore, rolltop barges also present a logistical problem in that there is no suitable “platform” for the sampling equipment.

?? Grain is typically loaded on barges by a spouting system fed by conveyors. This testing program will include a range of spout heights (approximately 20 to 40 ft) that typically occur in the industry to account for potential variations in emissions due to this parameter. A working goal is to identify suitable test sites with drop heights of 20 to 25 ft and 35 to 40 ft.

?? Because emissions may vary as the barge draft increases (i.e., depth of the barge in the water as a result of loading), testing will be performed at the following three loading doors along the cover:

1. near one end of the mostly empty barge (early in the loading cycle).
2. near the middle of the barge (roughly halfway through the loading cycle).
3. near the other end of the barge (late in the loading cycle).

?? Because emissions may vary as the grain level rises beneath an individual door, testing should be conducted at least near the beginning and near the end of loading through a loading door.

The **barge unloading** program will test two types of systems commonly used by the industry—the marine leg and continuous barge unloading units (CBU) equipment (such as that manufactured by Heyl & Patterson, Link Belt, etc.). Because marine legs represent a small and decreasing fraction of the equipment in use, more emphasis will be placed on the CBU systems than on the use of marine legs to unload barges.

Emission testing will begin at least 5 minutes after the leg or continuous unloading device first starts removing grain from the barge (total barge unloading times typically vary from 45 to 90 minutes) This will ensure that the device has dug through the top level of grain in the barge and has reached the bottom of the barge. Testing will be conducted only during the first half of the barge unloading operation. This will enhance sampling accuracy because it will minimize the distance between the sampling device and emissions due to the unloading operation.

In the **ship loading** phase, the test program is designed to address the following points:

?? Testing will consider both types of loading spout geometry. However, greater emphasis will be placed on vertical spout systems than on sloped spouts because vertical spouts is used much more frequently for loading vessels.

?? Because emissions may vary over the loading cycle, tests will be conducted

1. when the hold is mostly empty
2. when the hold is roughly half full
3. near the end of the loading cycle

Note that testing is not designed to consider "topping-off" operations when the very last portion of grain is placed in the ship hold, so that test results are generally applicable throughout the loading cycle. Topping off represents only a very small fraction of the ship loading operation (typically the last 4 feet in a 50 to 60 foot deep ship hold). Wind interference during the topping off operation is to likely to greatly hinder effective emission testing and the development of reliable test data. Furthermore, in topping off, the grain falls only a short distance and PM is emitted from only a small point rather than over the entire horizontal area of the hold opening. To keep the sampling array close to the emission point would require placing samplers within the hold area, which of course is impractical.

The overall test matrix for the program is shown in Table 1, with the distribution of tests between individual source conditions shown in Tables 2 through 4.

2.2 Test Site Selection

Table 1 indicates that six host facilities are expected to be needed for testing. Candidate test sites will be visited and the barge/vessel operations at each location will be observed. Candidate operations will be evaluated and final selection made on the basis of the following criteria:

1. The operations must be safely and readily accessible to the field sampling crew and must provide an adequate "platform" upon which to safely deploy sampling equipment. (This is a particularly important criterion for the barge unloading operations.)

2. The mean daytime wind speed should be at least 3 to 4 mph.

3. Operations should allow good wind movement in both the upwind (towards the sampling array) and downwind directions with as little interference or obstruction as possible based on local conditions.

4. There should be no significant upwind sources of PM in the immediate vicinity of the operation.

5. Preference will be given to those facilities where both the barge unloading and ship loading operations are found to be acceptable for testing. (In practical terms, this permits two sources to be tested without moving to a different host facility.)

6. Taken together, the final set of selected operations should span the range of operating features outlined in Tables 2 through 4. Arrangement will be made with the facility to ensure that good methods exist to accurately determine the amount of grain loaded during the test cycles and to receive the loading weights and grades during testing.

The predominant grains and oilseeds grown in and exported from the United States are corn, soybeans and wheat. Thus, it is likely that this research program will include tests in which these products and possibly grain sorghum are being loaded or unloaded. However, no special effort will be made to allocate a specific number tests to each grain since previous research determined that no significant differences exist among emissions of different bulk agricultural products. Testing will be conducted with the grains or oilseeds being loaded or unloaded at the time.

Table 1. Preliminary Overall Test Matrix

Operation	Number of host sites	Projected number of emission tests
Barge Loading	2	24
Barge Unloading	3	16
Ship Loading	3	21
Totals	6[a]	61

[a] Assumes that some ship loading and barge unloading tests can be accomplished at same facility.

Table 2. Preliminary Barge Loading Test Matrix

Geographic Location[a]	Level of grain under hatch	Barge mostly empty	Barge half full	Barge mostly full
Site 1	Low	2	2	2
	High	2	2	2
Site 2	Low	2	2	2
	High	2	2	2

[a] Assumes that the sites have different spout heights.

Table 3. Preliminary Barge Unloading Test Matrix

Unloading Equipment	Barge Sample 1	Barge Sample 2
Marine Leg	2	2
Continuous Barge Unloader—Site 1	3	3
Continuous Barge Unloader—Site 2	3	3

Table 4. Preliminary Ship Loading Test Matrix

Spout geometry	Ship hold mostly empty	Ship hold half full	Ship hold mostly full
Inclined	3	3	3
Straight Type 1	2	2	2
Straight Type 2	2	2	2

Section 3.
Test Methodology

This section discusses the test sampling methodology to be employed in the program. The barge/marine vessel test program will employ the **exposure profiling** measurement technique. This is the same measurement technique used in the 1995 NGFF testing at inland elevators [5] and which forms the basis for emission factors currently contained in AP-42. Importantly, the this is the same measurement technique proposed in grain testing strategy report to EPA [4].

MRI developed exposure profiling during the early 1970s and has applied the concept to a wide variety of open fugitive emission sources. AP-42 emission factors based on exposure profiling test results first appeared in 1976. Exposure profiling is EPA's preferred method to characterize emissions from fugitive dust sources, and emission factors based on the method typically have the highest quality ratings in AP-42. Thus, although there is no federally published "reference method" for fugitive dust testing, EPA has consistently accepted exposure profiling test results over the past 25 years.

This section begins with a general discussion of exposure profiling test methodology and sampling equipment. Thereafter, the plan provides specific details about how this measurement technique will be applied to the barge and vessel operations of interest in the field program.

3.1 General Description of Exposure Profiling

This program addresses "fugitive" emission sources which release air pollutants to the ambient atmosphere by means other than a stack, vent or duct. The exposure profiling concept represents a measurement technique that is potentially applicable to any fugitive emission source, provided that the following conditions are met:

- ?? Sampling equipment can be placed physically close to the source
- ?? The contribution of the emission source can be isolated from upwind (background) levels of the pollutant
- ?? There is sufficient air movement to convey the emitted pollutant to the sampling array.

The exposure profiling technique relies on simultaneous multipoint measurement of both concentration and air flow over the effective area of the emission plume in a mass flux measurement scheme. In this way, exposure profiling applies the same basic measurement concept, as does traditional stack sampling. In comparison to most stack sources, however, fugitive sources do not produce emissions that are thoroughly mixed in a well-defined, constant airflow. For these reasons, exposure profiling cannot employ a single probe traversing the plume cross-sectional area.

Instead, the method relies on simultaneous multipoint sampling of mass concentration and airflow over the effective area of the emission plume because, unlike stack sources, both the emission rate and the airflow are non-steady. Thus, the calculation scheme used with mass flux profiling requires combining numerous measurements (concentration and air flow) taken at separated points to spatially encompass the plume. An integrated value of the measurements is used to represent total mass being emitted by the source operation.

Because exposure profiling relies on ambient winds to transport the pollutant from the source to the sampling array, the measurement technique does not modify the source or affect the manner in which it would normally operate. This situation should be compared to other measurement techniques that attempt to: (a) first enclose the fugitive source, (b) actively evacuate the enclosure, and (c) apply a stack sampling method to determine emission levels. Clearly, the enclosure affects the source by artificially shielding it from the ambient winds (which are known to influence material transfer emission levels).

3.2 Overview of the Test Methodology

3.2.1 General Testing Guidelines

Because of the unsteady (i.e., time-varying) nature of both the dust and wind conditions, it is usually necessary to simultaneously sample concentration and wind speed at several points in the dust plume. In order to keep the vertical and horizontal sampler spacing manageable, it is important to operate as close to the emission source as practical. At times, it is advantageous to use “baffles” or a three-sided (i.e., two sides and a top face) enclosure to channel the dust plume. Importantly, the baffle does not in any way shield the source from ambient winds and so does not introduce any artificial control of the dust source. Instead, the enclosure merely serves to better define the effective area of the plume.

For most sources, the test program will use a multi-point, two-dimensional array of sampling points to define the effective area and fully characterize the concentration profile. Specific equipment deployments are discussed in Section 3.3 below. A description of the quality assurance/quality control procedures is presented in Appendix A.

Because the method relies on ambient winds to transport PM from the source to the sampling array, it is important that the winds remain steady over the expected 10 to 30-minute duration of the tests. The acceptable wind speed range extends from 2 to 20 mph and the wind direction must remain within ?45? of perpendicular to measurement plane in which the samplers are deployed. Testing will be suspended if winds become so strong as to stir up dust from surrounding areas or if rainfall ensues during equipment

setup or testing, unless the source is protected from rain (e.g., a covered barge unloading area). Criteria for terminating or suspending a test are given in Table A-4 in Appendix A.

3.2.2 Air Sampling and Ancillary Equipment

The primary airborne PM sampling device is a cyclone preseparator placed over a high-volume air sampler (Figure 1). A volumetric flow controller is used to ensure that the sample operates a steady flow rate. When operated at 40 actual cubic feet per minute (acfm), the cyclone exhibits a cutpoint of approximately 10 microns (? m) [7]. Thus, the cyclone collects a sample associated with PM-10 on an 8 in by 10 in glass fiber filter. In addition, a sample of coarser particulate matter collects within the body of the cyclone. The particulate matter concentration is determined by weighing the mass of material caught and dividing that mass by the total air volume sampled.

To determine particle size data, a second sampling system supplements mass exposure profiling system described above. The second system also uses a high-volume cyclone preseparator but in a different sampling configuration. Here, the cyclone is operated at a flow rate of 20 acfm over a 3-stage cascade impactor (Figure 2). At that flow rate, the cyclone and three stages exhibit D_{50} cutpoints of 15, 10.2, 4.2, and 2.1 ? mA. Particulate matter is collected on 4- by 5-in glass fiber impactor substrates and the 8- by 10-in glass fiber backup filter. To reduce particle "bounce" through the impactor, the substrates are sprayed with a grease solution that improves the adhesion of the impacted particles.

In either sampling system, the cyclone is cleaned after every sampling period. Cleaning is performed by washing with distilled water and drying the sampler. Typically, the material is not recovered for analysis.

Finally, a reference method high-volume Wedding & Associates PM-10 sampler will be deployed to measure background (upwind) concentrations in the immediate vicinity of the tested sources. This device also employs a volumetric flow controller to maintain a steady flow rate of 40 acfm and collects a sample on an 8 in. by 10 in. quartz filter. Note that, for safety reasons, the background sampler will not be deployed on the barge or ship. Instead, the background sampler will be located on the riverbank or dock in an area removed from any potential sources of PM (such as unpaved roads or material transfer points). Furthermore, because of the lower PM-10 concentration levels present upwind of the source, the background sampler must be operated much longer than the other samplers in order to collect adequate mass on the filter. As a practical matter, the upwind sampler will be started each day that holds the promise for successful field testing and will be allowed to run throughout the day until all source tests have been completed. This permits approximately 5 to 8 hr to collect adequate sample mass on the filter and ensures that the background concentration was being sampled during all source tests conducted during the day.

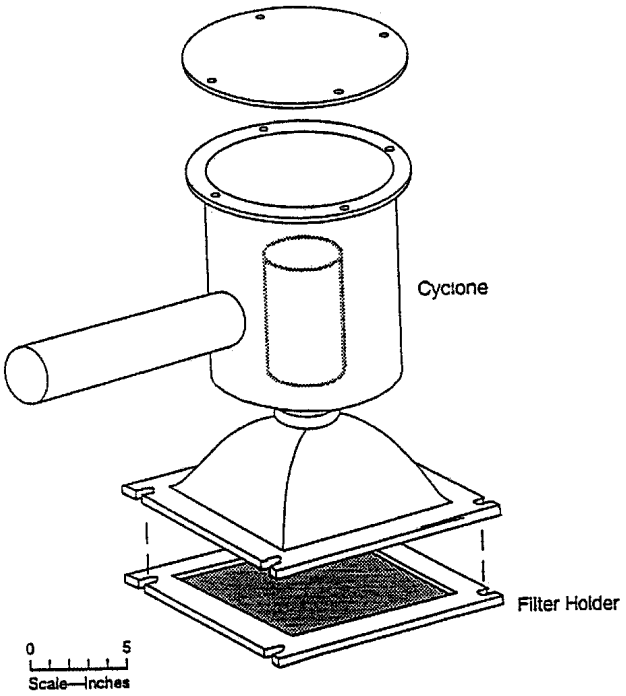

Figure 1. Cyclone Preseparator (40 acfm)

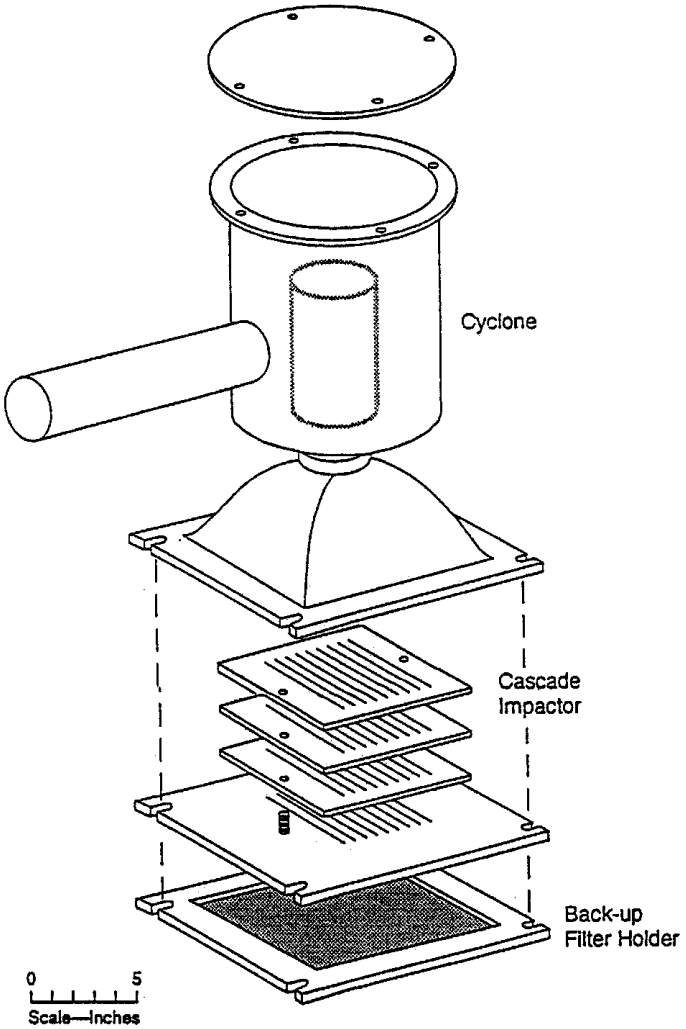

Figure 2. Cyclone Preseparator/Cascade Impactor (20 acfm)

In addition to the air sampling equipment, the exposure profiling method requires anemometers to measure air flow past the samplers. In this program, the following two types of anemometers will be used:

?? R. M. Young Gill-type (model 27106) anemometers will be deployed at two heights to determine the wind profile. In addition to these two fixed-axis anemometers, an R. M. Young portable wind station (model 05305) will be used to record wind speed and direction at the 3.0 m height downwind. All wind data will be accumulated into 5-min averages logged with a 26700 series R. M. Young programmable translator.

?? The second anemometer type is the Davis vane anemometer, which measures total wind run. Compared to the Gill anemometer, this device's compact size allows it to be more easily and safely deployed when only limited space is available.

An overview of the quality assurance/quality control (QA/QC) procedures, including details of filter media preparation/analysis and instrument calibration is provided in Appendix A.

3.3 Application of Exposure Profiling to Barge/Vessel Operations

This section describes how the exposure profiling method will be applied to the sources of interest in the test program. Note that, because sites have not yet been selected, certain detailed information (such as exact spacing of samplers) is not possible at this time.

3.3.1 Fliptop Barge Loading Operations

In order to test emissions from barge loading, a channel (with two sides plus a top) will be placed atop an open barge fliptop door (see Figure 3). The channel will be made from tarps and a lightweight frame for easy assembly/ disassembly. Each channel will be open to the wind and will have a cross-sectional area of approximately 5 ft x 7 ft. (Note that, although Figure 3 shows that the loading door lies along the centerline of the barge, the actual location and dimensions of the loading door may vary slightly by type of barge cover.) Because of the small cross-sectional area, a single (20 acfm) cyclone/impactor sampler will be positioned at the center of each channel. In this way, particle size data will be collected for each test of barge loading. Note also that a Davis vane anemometer will be used to measure air flow at the center of the opening.

To ensure that the material captured during the test represents mass directly attributable to the operation under investigation an EPA reference method, high-volume PM-10 sampler will be operated upwind of the source to determine the background concentration in the immediate vicinity of the loading operation. Based on analogy with previous tests at inland facilities [5], the concentration measured by the PM-10

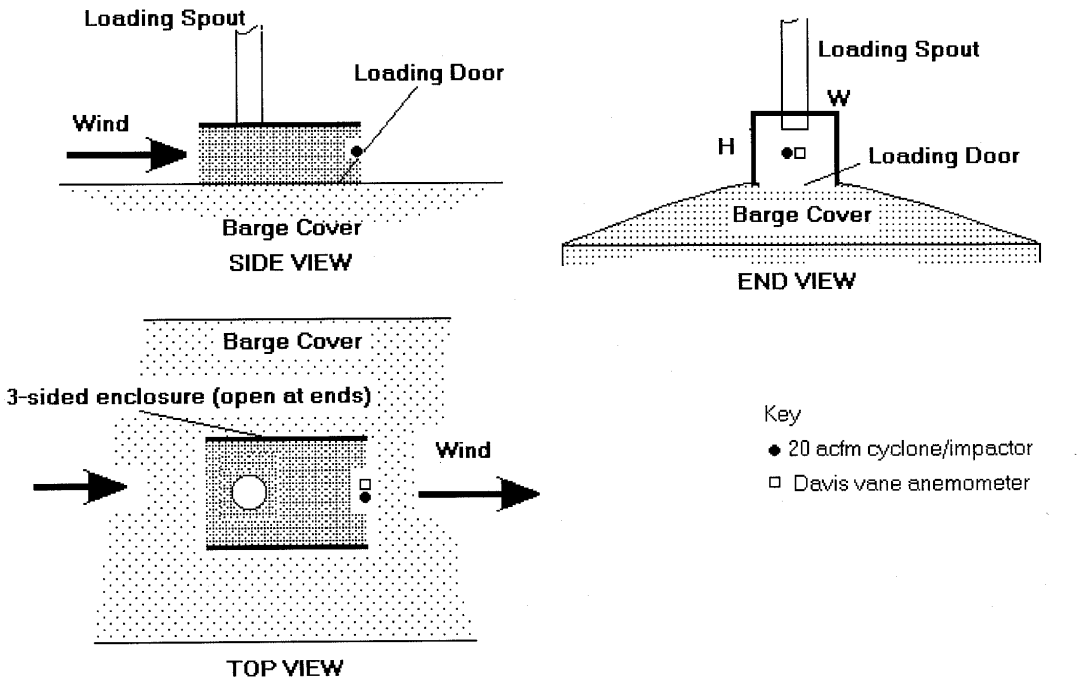

Figure 3. Sampling Deployment for Barge Loading Tests

cyclone/impactor is expected to be at least an order of magnitude greater than the background concentration.

Also based on analogy with previous tests at inland facilities [5], it is expected that adequate sample mass will be collected in tests that are approximately 10 to 15 min in duration.

3.3.2 Barge Unloading Operations

For this source, a 2-dimensional sampling array will be positioned at the bow of the barge. Figure 4 shows end elevation and top views of the sampling arrangement. The dimensions shown are approximate and will be finalized once test sites have been selected. Figure 4 shows that temporary sidewalls (tarps supported along the side) may be used where needed and conditions permit to help define the plume area by channeling wind toward the sampling array.[1]

Four 40-acfm cyclone pre-separators will be deployed in a symmetric pattern between the sidewalls to collect PM-10 samples for each test. Two tests will be conducted on each barge, so two separate sets of PM-10 samples will be collected. Based on past experience with inland facilities [5], it is anticipated that each PM-10 test will need to be approximately 10 to 20 min long to collect adequate sample mass on the 40-acfm filters.

To characterize particle size and PM-2.5, a single (20 acfm) cyclone/impactor will be used for both PM-10 emission tests conducted on an individual barge. That is to say, the cyclone/impactor will be shut down after the first PM-10 test and restarted (with the same collection media) for the second PM-10 test. This allows 20 to 40 minutes to collect adequate sample mass on the three impaction substrates and backup filter.

Two anemometers will be deployed at the same heights as the PM-10 samplers to measure wind speed. Selection of whether Gill or Davis vanes will be deployed will be made based on the amount of space available along the bow barge.

The barge hopper walls (and sidewalls if used) will define the horizontal extent of the dust plume. The vertical extent will be found by extrapolating the concentrations measured at the different heights to a value of zero. An example calculation is shown in Appendix B.

An EPA reference method, high-volume PM-10 sampler will be operated upwind of the source to determine the background concentration in the immediate vicinity of the unloading operation. The downwind PM-10 concentrations are expected to be at least an order of magnitude greater than the background concentration.

---

[1] The sidewalls may not be necessary if the “fenders” at the unloading station effectively channel the wind. Furthermore, the barge hopper walls themselves channel the plume toward the sampling array.

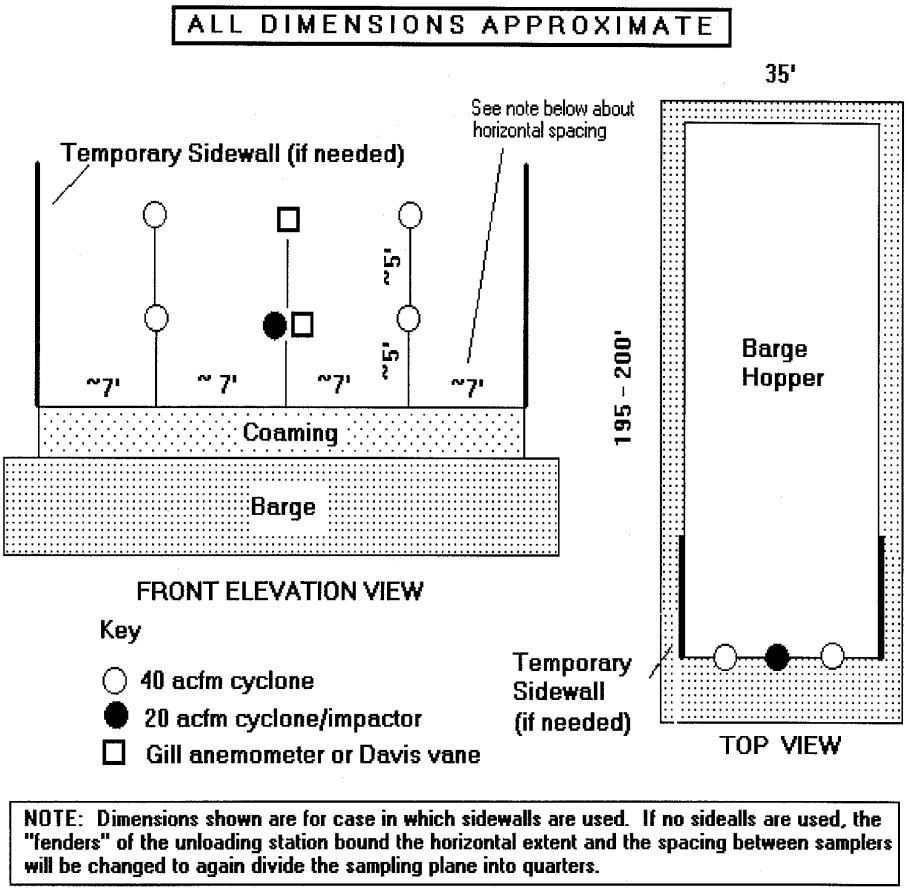

Figure 4. Sampling Deployment for Barge Unloading Tests

3.3.3 Ship Loading Operations

Figure 5 illustrates the sampler deployment to be used to test ship-loading emissions. (Because there is a variety of dimensions for ship holds, the figure references a general length L and width W.) A 2-dimensional sampling array of 40-acfm cyclones is used to characterize PM-10 mass flux across the measurement plane. Note that the measurement plane is placed perpendicular to the expected wind direction at the downwind edge of the ship hold.[2]

The measurement plane also contains a centrally located 20-acfm cyclone/impactor combination as well as two Gill anemometers. The R. M. Young wind station will be deployed at a 3-m height (measured above the ship combing) in the immediate vicinity of the source to record wind direction. Note that if the wind direction changes significantly during a test, the measurement plane may be realigned (following the guidelines presented in Table A-4 in Appendix A).

Based on past experience with inland facilities [5], it is anticipated that the PM-10 tests will need to be approximately 15 to 30 min long to collect adequate sample mass on the 40-acfm filters. Because a cyclone/impactor combination requires additional sampling time to collect adequate mass on the substrates and backup filter, a single 20-acfm unit will be used for all ship loading tests conducted during a single day.

The horizontal and vertical extent of the plume will be determined by extrapolating the net value to zero. This is discussed further in the next section and an example calculation is given in Appendix B.

3.4 Data Analysis

As mentioned earlier, a conservation of mass approach is used to determine the emission factor. The net particulate flux represents net passage of mass per unit area and is found by:

$$F = 10^{-7} \ (C - C_b) \ U$$

Where:
- F = net particulate flux ($mg/cm^2/s$)
- C = concentration measured (ug/m^3)
- C_b = "background" concentration (ug/m^3)
- U = mean wind speed (m/s)

[2] Ships with folding hatch covers may function as sidewalls in much the same way as added temporary or existing permanent sidewalls proposed for barge unloading tests. In that event, the downwind sampling array would be positioned along the downwind edge of the ship hold.

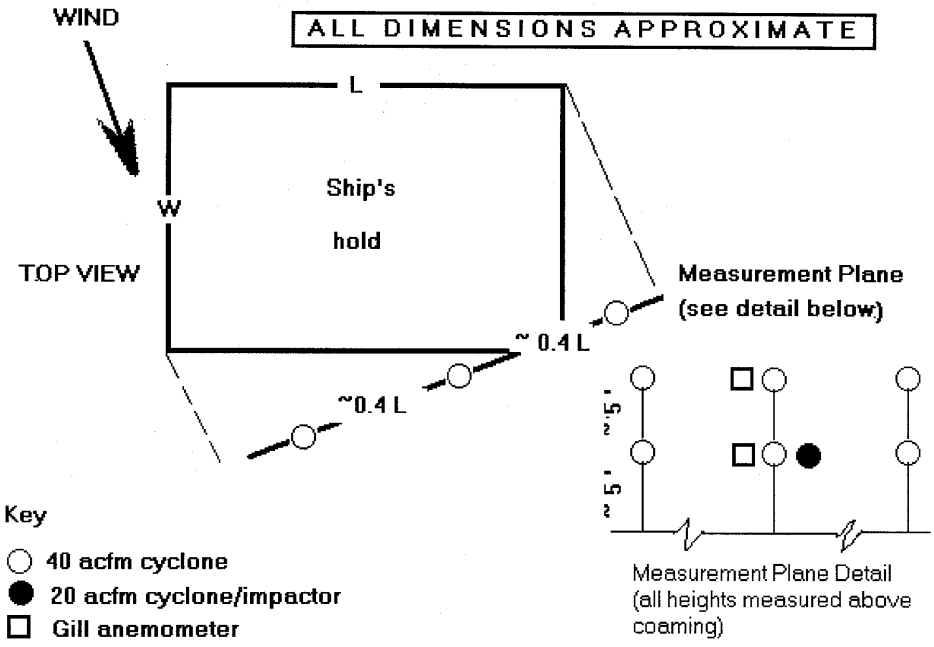

Figure 5. Sampling Equipment Deployment for Ship Loading Tests

Because flux is measured at individual points, it is necessary to integrate the flux over the effective cross-sectional area of the plume to determine the total mass emitted (M). The integration procedure differs depending upon what sampling array is used.

For example, the dust plume area for barge loading in this program is defined by an enclosure. Whether one or several samplers are used to sample over a rectangular effective area, the mass M emitted is found by:

$$M = \sum_{i=1}^{n} A_i \cdot F_i \cdot t_i$$

Where:

M	=	mass emission (mg)
n	=	number of samplers used
F_i	=	particulate flux ($mg/cm^2/s$) measured by sampler "i"
A_i	=	area (cm^2) of measurement plane sampled by "i"
t_i	=	time (s) sampler "i" ran

On the other hand, if the effective area is not entirely defined by an enclosure, a different integration scheme is needed to determine the mass emitted. In this case,

$$M = \int_0^H \int_L^R F \, t_i \, dy \, dz$$

where all quantities are the same as before and

H	=	effective height (cm) of the plume
L	=	left-hand extent (cm) of the plume
R	=	right-hand extent (cm) of the plume
z	=	height (cm) above ship coaming
y	=	crosswind distance (cm) measured from center of sampling array

For barge unloading, the barge hopper sides (and sidewalls if used) define the left-hand and right-hand extents. For the ship loading tests, on the other hand, the net concentrations at each height are extrapolated to zero to define the horizontal extent of the plume. An example of this procedure is provided in Appendix B.

Because flux values are measured at discrete points within the plume, a numerical integration scheme is necessary. The integration over the horizontal dimension (y) is performed first. Thereafter, the partial results (so-called "crosswind exposures") are integrated over height (z) by a) extrapolating to a zero value to define the vertical extent and b) extrapolating to a height of 0. The area of the resulting triangle thus represents the mass emitted (M). Again, Appendix B provides a detailed example of the calculation procedure.

Dividing M by the amount of grain handled yields the emission factor in terms of pounds emitted per bushel of grain handled. Facility personnel will determine the amount of grain handled during an individual test. Note that the means of determining the amount of grain transferred may vary between different sites. As such, specification of how the determination will be made must be delayed until actual test sites are selected. At that time, a separate technical memorandum will be prepared to provide site-specific information for this test plan.

Additional information and actions on the part of the host facility are described in the next section.

Section 4.
Test Site Logistics and Schedule

The following material/services will need to be supplied by host facility:

1. Necessary safety equipment/rigging for working on the barge or ship. MRI personnel will provide their own personal protective equipment (steel toes, hard hat, and safety glasses).

2. Extension cords or other means to provide 100-amp 110 volt AC power at each sampling site (i.e., barge loader, unloader, aboard ship).

3. Ready access to each sampling point. If access is by ladder, etc. such that a person could not safely carry approximately 20 lb. while getting to the site, a hoist/sling system will be required to lower/raise materials.

4. Suitable parking space for a 24-ft box truck. If space is not available within the general vicinity of the operation to be tested, MRI will require a nearby storage space of approximately 50 sq ft that can be secured.

5. The facility should appoint one or two plant liaison persons who can ensure that control devices are deactivated during the 5- to 30-min test periods, obtain net weights of material loaded or unloaded during a test, and arrange for obtaining the official or in-house grade (according to established grade standards) of the grain loaded or unloaded.

A tentative schedule is shown below. Note that most target dates are referenced to time after approval of test plan.

Table 5. Preliminary Test Schedule

	Milestone	Target date[a]
1.	Submit test plan to EPA	4/28/00
2.	Receive approval of test plan	5/15/00
3.	Begin site inspections	4 weeks
4.	Complete site selection and supply memorandum with site-specific items	7 weeks
5.	Prepare sampling supplies	3 months
6.	Begin field activities	3 months
7.	Complete field activities	6 months
8.	Complete analysis	7 months
9.	Submit draft test report	9 months

[a] When a date is not given, time is referenced to period after approval of test plan.

Section 5.
References

1. *Compilation of Air Pollutant Emission Factors.* AP-42. Fifth Edition. U. S. Environmental Protection Agency, Research Triangle Park, NC, January 1995.
2. Midwest Research Institute. "Tests of Oil Suppression of PM-10 at Grain Elevators," EPA Contract No. 68-D2-0165, Work Assignment 2-32, November 1994.
3. Midwest Research Institute. "Emission Factor Documentation for AP-42 Section 9.9.1: Grain Elevators and Grain Processing Facilities," EPA Contract No. 68-D2-0159, Work Assignment I-08, May 1994.
4. Midwest Research Institute. "PM-10 Test Strategies for Grain Elevators," EPA Contract No. 68-D2-0165, Work Assignments 1-30 and 2-32, January 1995.
5. Midwest Research Institute. "Emission Factors for Grain Elevators," EPA Contract MRI Project No. 3889 and 4672. Prepared for National Grain and Feed Foundation, Midwest Research Institute, January 1997.
6. *Technical Procedures for Developing AP-42 Emission Factors and Preparing AP-42 Sections.* EPA-454/B-93-050. Office of Air Quality Planning and Standards, U. S. Environmental Protection Agency, Research Triangle Park, NC, October 1993.
7. Baxter, T.E. et al. "Calibration of a Cyclone for Monitoring Inhalable Particulates," *Journal of Environmental Engineering*. 112(3), 468. 1986.

Appendix A

Quality Assurance/Quality Control Procedures

A.1 Sample Handling and Traceability Requirements

The majority of environmental samples collected during the test program consist of particulate matter captured on a filter medium. Analysis will be gravimetric, as described in the following paragraphs.

To maintain sample integrity, the following procedure will be used. Each filter will be stamped with a unique 7-digit identification number. SOP (standard operating procedure) MRI-8403 describes the numbering system that is employed. A file folder is also stamped with the identification number and the filter is placed in the corresponding folder.

Particulate samples are collected on glass fiber (or quartz) filters (8 in by 10 in) or on glass fiber impaction substrates (4 in by 5 in). Prior to the initial (tare) weighing, the filter media are equilibrated for 24 h at constant temperature and humidity in a special weighing room. Temperature and humidity levels are given in Table A-1. The room contains a hygrothermograph to provide a permanent record of equilibration conditions. The chart is changed weekly and recalibrated (as necessary) against wet and dry bulb thermometers. Those thermometers are checked annually against traceable units.

During weighing, the balance is checked at frequent intervals with standard (Class S) weights to ensure accuracy. The filters remain in the same controlled environment until a second analyst reweighs them as a precision check. A minimum of ten percent (10%) (with an absolute minimum of three blanks per test site) of the filters used in the field will serve as blanks to account for the effects of handling. The QA guidelines pertaining to preparation of sample collection media are presented in Section A-3.

The filters are placed in their like-numbered folders. Groups of approximately 50 are sealed in heavy-duty plastic bags and stored in a heavy corrugated cardboard box equipped with a tight-fitting lid. Unexposed filters are transported to the field in the same truck as the sampling equipment and are then kept in the field laboratory.

Once they have been used, exposed filters are placed in individual glassine envelopes and then into numbered file folders. Groups of up to 50 file folders are sealed within heavy-duty plastic bags and then placed into a heavy-duty cardboard box fitted with a lid. Exposed and unexposed filters are always kept separate to avoid any cross-contamination. When exposed filters and the associated blanks are returned to the main MRI laboratory in Kansas City, they are equilibrated under the same conditions as the initial weighing. After reweighing, a minimum of 10% of each type is audited to check weighing accuracy.

In order to ensure traceability, all filter and material sample transfers will be recorded in a notebook or on forms. The following information will be recorded: the assigned sample codes, date of transfer, location of storage site, and the names of the persons initiating and accepting the transfer.

A.2 Analytical Method Requirements

All analytical methods required for this testing program are inherently gravimetric in nature. That is to say, the final and tare weights are used to determine the net mass of particulate captured on filters and other collection media. The tare and final weights of blank filters are used to account for the systematic effects of filter handling.

The following procedures are followed whenever a sample-related weighing is performed:

?? An accuracy check at the minimum of one level, equal to approximately the tare and actual weight of the sample or standard. Standard weights should be class S or better.

?? The observed mass of the calibration weight (not including the tare weight) must be within 1.0% of the reference mass.

?? If the balance calibration does not pass this test at the beginning of the weighing, the balance should be repaired or another balance should be used. If the balance calibration does not pass this test at the end of a weighing, the samples or standards should be reweighed using a balance that can meet these requirements.

A.3 Quality Control Requirements

Routine audits of sampling and analysis procedures are to be performed. The purpose of the audits is to demonstrate that measurements are made within acceptable control conditions for particulate source sampling and to assess the source testing data for precision and accuracy. Examples of items audited include gravimetric analysis, flow rate calibration, data processing, and emission factor calculation. The mandatory use of specially designed reporting forms for sampling and analysis data obtained in the field and laboratory aids in the auditing procedure.

To prepare hi-vol filters for use in the field, filters are weighed under stable temperature and humidity conditions. After they are weighed and have passed audit weighing, the filters are packaged for shipment to the field. Table A-1 outlines the general requirements for conditioning and weighing sampling media. Note that a second, independent analyst performs the audit weights.

Table A-1. Quality Assurance Procedures for Sampling Media

Activity	QA check/requirement
Preparation	Inspect and imprint glass fiber media with identification numbers.
Conditioning	Equilibrate media for 24 h in clean controlled room with relative humidity of 40% (variation of less than ±5% RH) and with temperature of 23°C (variation of less than ±1°C).
Weighing	Weigh hi-vol filters to nearest 0.05 mg.
Auditing of weights	Independently verify final weights of 10% of filters and substrates (at least four from each batch). Reweigh entire batch if weights of any hi-vol filters deviate by more than ±2.0 mg. For tare weights, conduct a 100% audit. Reweigh any high-volume filter whose weight deviates by more than ±1.0 mg. Follow same procedures for impactor substrates used for sizing tests. Audit limits for impactor substrates are ±1.0 and ±0.5 mg for final and tare weights, respectively.
Collection of blanks	Conduct at least one complete blank test for every 1 to 9 emission tests. A minimum of 3 blanks is necessary for each test site/source combination.
Calibration of balance	Balance to be calibrated once per year by certified manufacturer's representative. Check prior to each use with laboratory Class S weights.

As indicated in Table A-1, a minimum of 10% field blanks will be collected for QC purposes. This is accomplished by conducting 1 blank test for every 1-to-9 emission tests conducted. A blank test is conducted in exactly the same manner as an emission test except that no air is passed through the filters after they are loaded into the sampling devices. Instead, they are immediately recovered and handled the same as any exposed filter from an actual emission test. Blank runs are labeled in the same manner as other tests although the run sheets indicate that a blank test was conducted.

Handling blank filters in an identical manner to all sample filters allows one determine systematic weight changes due to handling steps alone. A field blank filter is loaded into a sampler and then immediately recovered without any air being passed through the media. This technique has been successfully used in many MRI programs to account for systematic weight changes due to handling.

After the particulate matter samples and blank filters are collected and returned from the field, the collection media are placed in the gravimetric laboratory and allowed to come to equilibrium. Each filter is weighed, allowed to return to equilibrium for an additional 24 h, and then a minimum of 10% of the exposed/blank filters are reweighed. If a filter fails the audit criterion, the entire lot will be allowed to condition in the gravimetric laboratory an additional 24 h and then reweighed. The tare and first weight criteria for filters (Table A-1) are based on an internal MRI study conducted in the early

1980s to evaluate the stability of several hundred 8- x 10-in glass fiber filters used in exposure profiling studies.

A.4 Instrument/Equipment Testing, Inspection and Maintenance

Inspection and maintenance requirements for sampling equipment are provided in Table A-2. Note that because the cyclone pre-separator is cleaned between individual tests, only limited maintenance is required.

A.5 Instrument Calibration and Frequency

Calibration and frequency requirements for the balances used in the gravimetric analyses are given in Table A-1.

Requirements for high-volume (hi-vol) sampler flow rates rely on the use of secondary and primary flow standards. The Roots meter is the primary volumetric standard and the BGI orifice is the secondary standard for calibration of hi-vol sampler flow rates. The Roots meter is calibrated and traceable to a NIST standard by the manufacturer. The BGI orifice is calibrated against the primary standard on an annual basis. Before going to the field, the BGI orifice is first checked to assure that it has not been damaged. In the field, the orifice is used to calibrate the flow rate of each hi-vol sampler. (For samplers with volumetric flow controllers, no calibration is possible and the orifice is used to audit the nominal 40 acfm flow rate.) Table A-2 specifies the frequency of calibration and other QA checks regarding air samplers.

Table A-3 outlines the QC checks employed for miscellaneous instrumentation needed.

A.6 Inspection/Acceptance Requirements for Supplies and Consumables

The primary supplies and consumables for this field exercise consist of the air filter and collection media. Prior to stamping and initial weighing (Table A-1), each filter is visually inspected and is discarded for use if any pin-holes, tears, or other damage is found.

A.7 Data Acquisition Requirements

In addition to the field samples, MRI will also collect information on the physical size and operational parameters of equipment used in the field exercise. To the extent practical and appropriate, physical characteristics will be obtained from the manufacturer or the manufacturer's literature. Physical dimensions will be measured and recorded.

Table A-2. Quality Assurance Procedures for Sampling Equipment

Activity	QA check/requirement[a]
Maintenance • All samplers	Check motors, brushes, gaskets, timers, and flow measuring devices at each plant prior to testing. Repair/replace as necessary.
Calibration • Volumetric flow controller	Prior to start of testing at each regional site, ensure that flow determined by orifice and the look-up table for each volumetric flow controller agrees within 7%. For 20 acfm devices (particle size profiling), calibrate each sampler against orifice prior to use each regional site and every two weeks thereafter during test period. (Orifice calibrated against displaced volume test meter annually.)
Operation • Timing	Start and stop all downwind samplers during time span not exceeding 1 min.
• Isokinetic sampling (cyclones)	Adjust sampling intake orientation whenever mean wind direction dictates.
	Change the cyclone intake nozzle whenever the mean wind speed approaching the sampler falls outside of the suggested bounds for that nozzle.
• Prevention of static deposition	Cover sampler inlets prior to and immediately after sampling.

[a] "Mean" denotes a 3- to 15-min average.

Table A-3. Quality Assurance for Miscellaneous Instrumentation

Instrumentation	QA check/requirement[a]
Digital manometers	Compare reading against water-in-tube manometers over range of operating pressures, using "Y" or "T" connectors and flexible tubing. Do not use units which differ by more than 7%.
Digital barometer	Compare against mercury-in-tube barometer. Do not use if more than 0.5 in Hg difference in reading.
Thermometer (mercury or digital)	Compare against NIST-traceable mercury-in-glass. Do not use if more than 3.0?C difference.
Gill anemometers and wind station	Conduct a 4-point calibration of each unit over the range of 2 to 20 mph both before the field exercise and upon return to MRI's main laboratories. Use factory-specified devices for calibration of wind speed and direction.
Davis vane anemometers	Conduct a 4-point calibration by collocating each device with a pitot tube in a steady air flow spanning the range of likely wind speeds to be encountered (5 to 20 mph). Total wind run should be at least 2000 ft.
Watches/stopwatches	The field test leader will compare an elapsed time (> 1 hr) recorded by his watch against the US Naval Observatory master clock. Do not use if more than 3% difference. All crew members will synchronize watches (to the nearest minute) at the start of each test day.

[a] Activities performed prior to going to the field, except as noted.

Table A-4. Criteria for Suspending or Terminating an Exposure Profiling Test

A test may be suspended or terminated if:[a]

1. Rainfall ensues during equipment setup or when sampling is in progress. (Exception made in the case of a source protected by a roof or other enclosure).
2. Mean wind speed during sampling moves outside the 2 to 20 mph acceptable range for more than 20% of the sampling time.
3. The angle between the mean wind direction and the perpendicular to the measurement plane exceeds 45? for more than 20% of the sampling time.
4. Daylight is insufficient for safe equipment operation. (Exception made in case of adequate artificial lighting.)
5. Source conditions deviates from predetermined criteria (e.g., loading equipment malfunction, water splashing, truck spills).

[a] "Mean" denotes a 5- to 15-min average.

Appendix B

Example Calculation

This example calculation is based on data for the 2-dimensional sampling array shown n Figure B-1. Six PM-10 samplers are arranged in 2 horizontal (crosswind) rows at heights of 1.4 and 3.4 m. The vertical arrays are positioned at 2.4-m spacing.

Figure B-1 shows the downwind concentrations measured at each sampling, as well as the upwind (background) concentration of 49 ? g/m^3. When the background value is subtracted from the downwind values, the net concentrations in Table B-1 are obtained.

Table B-1. Net Concentrations (? g/m^3)

Height (m)	Crosswind location		
	–2.4 m	0 m	2.4 m
3.4	767	1034	608
1.4	2787	3616	2112

The mean measured wind speed U during the test was determined as 2.73 and 3.35 m/s at the 1.4-m and 3.4-m heights, respectively. Calculation of net particulate flux F (mg/cm^2-s) is given by

$$F = 10^{-7} (C_{net}) U$$

Total exposure is found by multiplying the flux by the duration (time) of the test. Based on a 129 minute test, the exposures (mg/cm^2) Table 2 are found:

Table 2. Net Exposures (mg/cm^2)

Height (m)	Crosswind location		
	–2.4 m	0 m	2.4 m
3.4	1.99	2.68	1.58
1.4	5.89	7.64	4.46

For example, the first entry is found by

10^{-7} x 767 ? g/m^3 x 129 min x 60 s/min x 3.35 m/s = 1.99

Figure B-2 shows the exposure values at the 1.4- and 3.4-m heights plotted against crosswind direction. The figure also shows how the values are extrapolated to a value of zero to determine the left-hand and right-hand extents of the plume. The exposures are integrated by finding the area under the triangles formed.

Figure B-3 plots the crosswind exposures found from Figure B-2 against height. The final step of the integration process involves determining the area of the triangle in Figure B-3. As shown, the integration of particulate exposure results in a total mass of 4020 g or 4.02 kg.

The emission factor is found by dividing the total mass calculate in the above steps by the total mass of material transferred during the test. Assuming that a total of 2000 Mg was transferred, the emission factor would be found as

4.02 kg/2000 Mg = 0.00201 kg/Mg

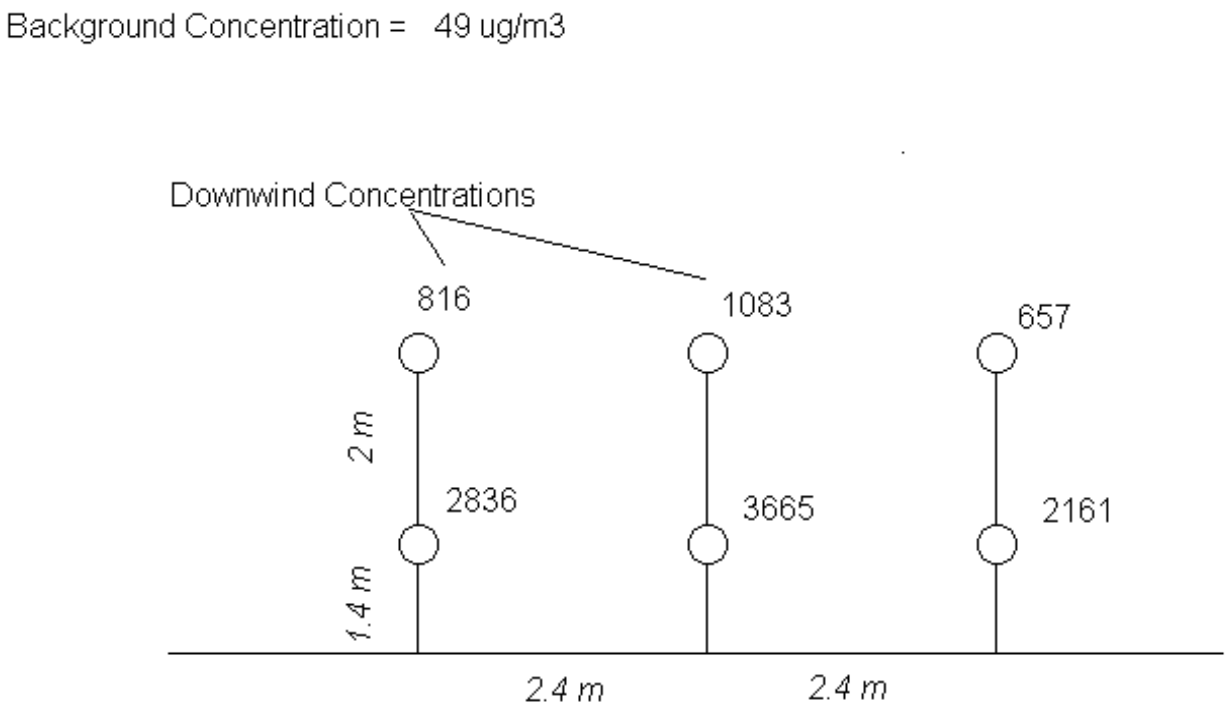

Figure B-1. Example 2-Dimensional Sampling Data

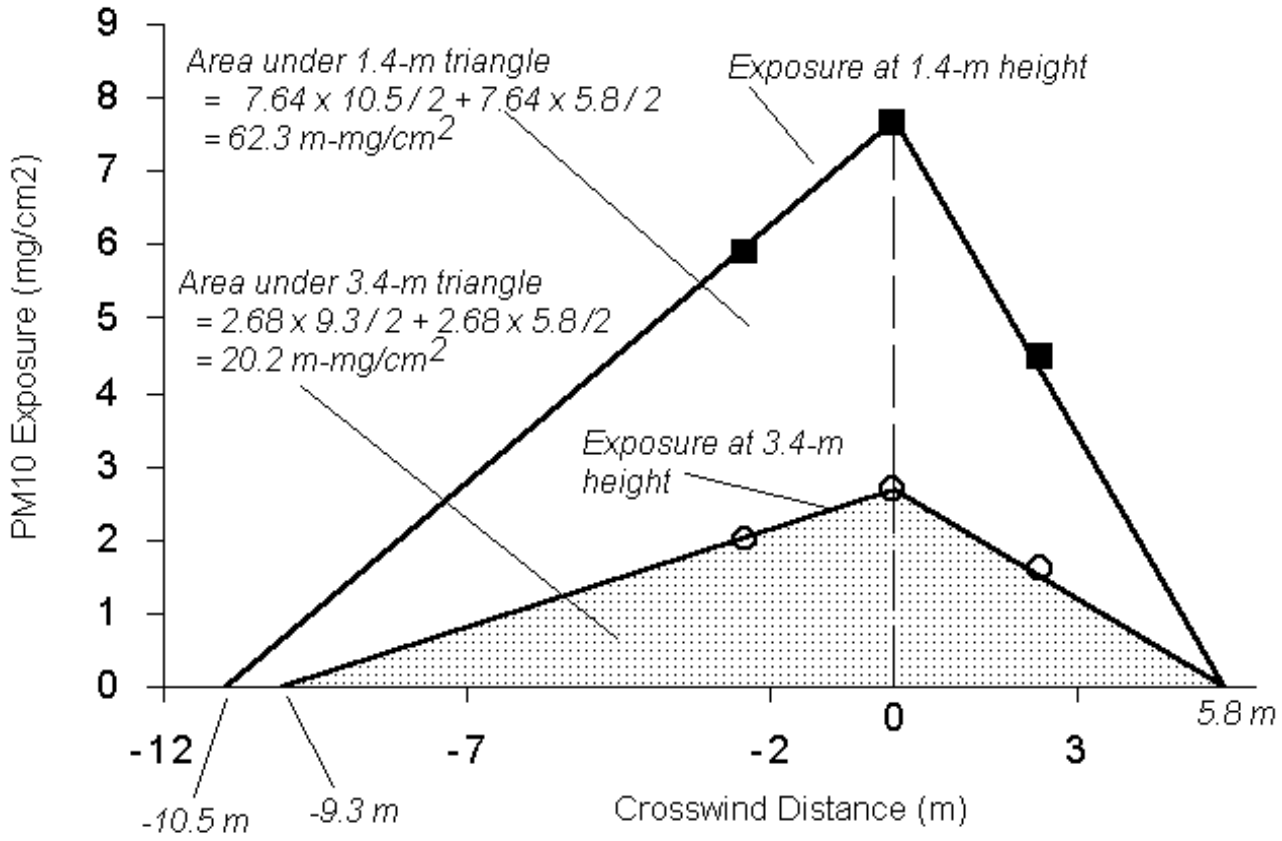

Figure B-2. Crosswind Integration of Exposure Values

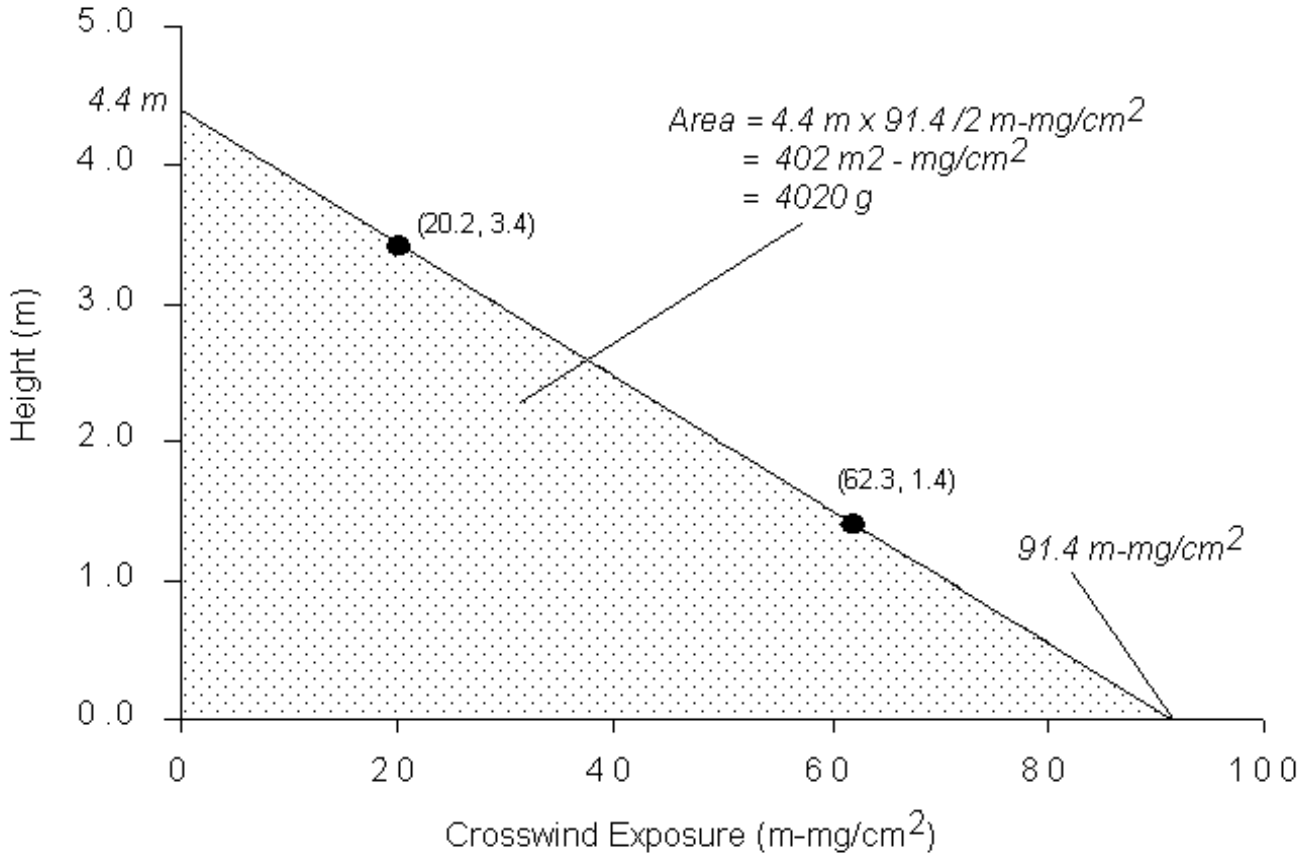

Figure B-3. Vertical integration of the Crosswind Exposure Values

Appendix B

Quality Assurance/Quality Control Activities

B.1 Sample Handling and Traceability Requirements

To maintain sample integrity, the following procedure was used. Each filter was stamped with a unique 7-digit identification number in accordance with SOP (standard operating procedure) MRI-8403.

Particulate samples were collected on glass fiber filters (8 in by 10 in) or on glass fiber impaction substrates (4 in by 5 in). Prior to the initial (tare) weighing, the filter media were equilibrated for 24 h at constant temperature and humidity in a special weighing room. Temperature and humidity levels are given in Table B-1. (*Italicized* items in this appendix's tables present the QA/QC activities as performed during the field test program.) The room contains a hygrothermograph to provide a permanent record of equilibration conditions. The chart was changed weekly and recalibrated against wet and dry bulb thermometers (which are both checked annually against traceable units).

During weighing, the balance was checked at frequent intervals with standard (Class S) weights to ensure accuracy. The filters remained in the same controlled environment until a second analyst reweighed them as a precision check. The QA guidelines pertaining to preparation of sample collection media are presented in Section B.3.

The filters were placed in their like-numbered folders. Groups of approximately 50 were sealed in heavy-duty plastic bags and stored in a heavy corrugated cardboard box equipped with a tight-fitting lid. Substrates were stored “greased side up” in specially designed frames that kept each substrate separate from the others. Unexposed filters and substrates were transported to each field site in the same truck as the sampling equipment and were kept in the field laboratory established in the truck at each site.

As they have been used, exposed filters were placed in individual glassine envelopes and then into numbered file folders. Groups of up to 50 file folders were sealed within heavy-duty plastic bags and then placed into a heavy-duty cardboard box fitted with a lid. Exposed substrates were returned to the specially designed frames. Exposed and unexposed collection media were always kept separate to avoid any cross-contamination. Of a total of 269 filters and 119 substrates used during the field program, 33 and 19, respectively, were used as field blanks to account for the effects of handling, loading, transport, and storage.

When exposed media and the associated blanks were returned to the main MRI laboratory in Kansas City, they were equilibrated under the same conditions as the initial weighing. After reweighing, a minimum of 10% of each type was audited to check weighing accuracy.

In order to ensure traceability, all filter use and analyses were recorded on specially designed data forms.

B.2 Analytical Method Requirements

All analytical methods required for this testing program are inherently gravimetric in nature. That is to say, the final and tare weights were used to determine the net mass of particulate captured on filters and other collection media. The tare and final weights of blank filters were used to account for the systematic effects of filter handling.

The following procedures were followed whenever a sample-related weighing is performed:

- ?? An accuracy check at three levels, spanning the range of approximately the tare weight of the collection medium and the actual weight of the sample plus the medium. Standard weights were class S.
- ?? All accuracy checks were within 0.02% of the reference standard and met the QC requirements required in SOP MRI-8403.

B.3 Quality Control Requirements

Routine audits of sampling and analysis procedures were performed. The purpose of the audits was to demonstrate that measurements are made within acceptable control conditions for particulate source sampling and to assess the source testing data for precision and accuracy. Examples of items audited included gravimetric analysis, flow rate calibration, data processing, and emission factor calculation. The mandatory use of specially designed reporting forms for sampling and analysis data obtained in the field and laboratory aided in the auditing procedure.

To prepare hi-vol filters and impactor substrates for use in the field, the collection media were weighed under stable temperature and humidity conditions. After they were weighed and have passed audit weighing, the media were packaged for shipment to the field in the manner described in Section B.1. Table B-1 outlines the general requirements for conditioning and weighing sampling media. Note that a second, independent analyst performs the audit weights.

Table B-1. Quality Assurance Procedures for Sampling Media

Activity	QA check/requirement
Preparation	Inspect and imprint glass fiber media with identification numbers. *Filters inspected and imprinted with identification numbers in accordance with SOP MRI-8403.*
Conditioning	Equilibrate media for 24 h in clean controlled room with relative humidity of 40% (variation of less than ±5% RH) and with temperature of 23°C (variation of less than ±1°C). *Equilibration data contained in filter analysis logs. All antecedent conditions prior to weighing met QC criteria.*
Weighing	Weigh hi-vol filters to nearest 0.05 mg. *Weights given in filter analysis logs.*
Auditing of weights	Independently verify final weights of 10% of filters and substrates (at least four from each batch). Reweigh entire batch if weights of any hi-vol filters deviate by more than ±2.0 mg. For tare weights, conduct a 100% audit. Reweigh any high-volume filter whose weight deviates by more than ±1.0 mg. Follow same procedures for impactor substrates used for sizing tests. Audit limits for impactor substrates are ±1.0 and ±0.5 mg for final and tare weights, respectively. *All audit weights given in filter analysis logs. Of the 300 8-in by 10-in filters, 3 did not pass initial audit but did pass second audit in accordance with SOP MRI-8403. Greased substrates which could not pass tare audit criteria were removed from sampling media taken to the field Exposed and blank media returned from the field underwent 100% audit of final weights.*
Collection of blanks	Conduct at least one complete blank test for every 1 to 9 emission tests. A minimum of 3 blanks is necessary for each test site/source combination. *A total of 33 filters and 19 substrates were used as field blanks with at least three blanks collected at each site. Blank filter values are given in Appendix E.*
Calibration of balance	Balance to be calibrated once per year by certified manufacturer's representative. Check prior to each use with laboratory Class S weights. *Balance calibrated annually through MRI Instrument Services. Three-level balance check data included in filter analysis log.*

As indicated in Table B-1, MRI collected over the minimum of 10% field blanks for QC purposes conducting 1 blank test for every 1-to-9 emission tests performed. A blank test was conducted in exactly the same manner as an emission test except that no air was passed through the filters after they had been loaded into the sampling devices. Instead, they were immediately recovered and handled the same as any exposed filter from an actual emission test. Blank runs were labeled in the same manner as other tests although the run sheets indicate that a blank test was conducted.

Handling blank filters in an identical manner to all sample filters allows one determine systematic weight changes due to handling steps alone. A field blank filter was loaded into a sampler and then immediately recovered without any air being passed through the media. This technique has been successfully used in many MRI programs to account for systematic weight changes due to handling.

After the particulate matter samples and blanks were collected and returned from the field, the collection media were placed in the gravimetric laboratory and allowed to come to equilibrium. Each filter/substrate was weighed, allowed to return to equilibrium for an additional 24 h, and 100% were reweighed in this program by a second analyst. If a filter or substrate failed to meet the audit criteria given in Table B-1, it was allowed to condition in the gravimetric laboratory an additional 24 h and then reweighed.

B.4 Instrument/Equipment Testing, Inspection and Maintenance

Inspection and maintenance requirements for sampling equipment are provided in Table B-2. Note that because the cyclone pre-separator was cleaned between individual tests, only limited maintenance was required.

B.5 Instrument Calibration and Frequency

Calibration and frequency requirements for the balances used in the gravimetric analyses was given in Table B-1.

Requirements for high-volume (hi-vol) sampler flow rates rely on the use of secondary and primary flow standards. The Roots meter is the primary volumetric standard and the BGI orifice is the secondary standard for calibration of hi-vol sampler flow rates. The Roots meter is calibrated and traceable to a NIST standard by the manufacturer. The BGI orifice is calibrated against the primary standard on an annual basis. Before going to the field, the BGI orifice is first checked to assure that it has not been damaged. In the field, the orifice is used to calibrate the flow rate of each hi-vol sampler. Table B-2 specifies the frequency of calibration and other QA checks regarding air samplers.

Table B-3 outlines the QC checks employed for miscellaneous instrumentation needed.

B.6 Inspection/Acceptance Requirements for Supplies and Consumables

The primary supplies and consumables for this field exercise consisted of the air filter and collection media. Prior to stamping and initial weighing (Table B-1), each filter was visually inspected and was discarded for use if any pin-holes, tears, or other damage

is found. Furthermore, any sampling media that could not meet initial tare audit criteria were discarded prior to going to the field.

B.7 Data Acquisition Requirements

In addition to the field samples, MRI also collected information on the physical size and operational parameters of equipment used in the field exercise. To the extent practical and appropriate, physical characteristics were obtained from the facility operator. Physical dimensions were measured and recorded.

Table B-2. Quality Assurance Procedures for Sampling Equipment

Activity	QA check/requirement[a]
Maintenance • All samplers	Check motors, brushes, gaskets, timers, and flow measuring devices at each plant prior to testing. Repair/replace as necessary. *Sampling devices were cleaned and checked prior to loading truck and upon arrival at plant.*
Calibration • Volumetric flow controller	Prior to start of testing at each regional site, ensure that flow determined by orifice and the look-up table for each volumetric flow controller agrees within 7%. For 20 acfm devices (particle size profiling), calibrate each sampler against orifice prior to use each regional site and every two weeks thereafter during test period. (Orifice calibrated against displaced volume test meter annually.) *Between the time that the test plan was prepared and the field test program, MRI modified its operating procedures for VFC flow controllers. Instead of verifying the look-up table (which is based on only 3 measured flows), an alternative now allows development of a unit-specific calibration of flow rate against filter pressure based on at least 5 measured points. Calibration curves were developed for each VFC as well as cyclone/ impactor (20 acfm) units . Calibrations were performed at each regional site (all tests were completed within 2 weeks of initial calibration at each regional site) and in the event of repair of any unit.*
Operation • Timing	Start and stop all downwind samplers during time span not exceeding 1 min. *All downwind air samplers were start/stopped within 1 min period. Time recorded to nearest 15 seconds.*
• Isokinetic sampling (cyclones)	Adjust sampling intake orientation whenever mean wind direction dictates. *Wind direction relative to line source monitored immediately before and throughout test. Rotation of sampling arrays noted on field run sheets.* Change the cyclone intake nozzle whenever the mean wind speed approaching the sampler falls outside of the suggested bounds for that nozzle. *Wind speed throughout range of sampling heights monitored immediately before and throughout the test. Use of nozzles indicated on field run sheets.*
• Prevention of static deposition	Cover sampler inlets prior to and immediately after sampling. *Loading and unloading operations were coordinated in connection with the sampling. Samplers were uncovered immediately before start of the loading/unloading operation and samplers were allowed to run for at least 1 minute after the loading/unloading was completed.*

[a] "Mean" denotes a 5-min average.

Table B-3. Quality Assurance for Miscellaneous Instrumentation

Instrumentation	QA check/requirement[a]
Digital manometers	Compare reading against water-in-tube manometers over range of operating pressures, using “Y” or “T” connectors and flexible tubing. Do not use units which differ by more than 7%. *Two digital manometers were used. Maximum deviation for unit "A" was 2.4% and < 0.5% for unit "B".*
Digital barometer	Compare against mercury-in-tube barometer. Do not use if more than 0.5 in Hg difference in reading. *Deviation of altimeter/barometer Y-1253 was 0.23 in Hg (0.8% deviation).*
Thermometer (mercury or digital)	Compare against NIST-traceable mercury-in-glass. Do not use if more than 3.0?C difference. *Difference for Hg-in-glass unit was 0.7?F (0.4 ?C) high. Reference thermometer checked annually by MRI Instrument Services.*
Gill anemometers and wind station	Conduct a 4-point calibration of each unit over the range of 2 to 20 mph both before the field exercise and upon return to MRI's main laboratories. Use factory-specified devices for calibration of wind speed and direction. *Units were calibrated using R. M. Young-recommended prior to start of field program and upon return to MRI's main laboratories.*
Davis vane anemometers	Conduct a 4-point calibration by collocating each device with a pitot tube in a steady air flow spanning the range of likely wind speeds to be encountered (5 to 20 mph). Total wind run should be at least 2000 ft. *Four-point calibration against Gill anemometer (after the Gill itself had been calibrated) performed on two units used during field program. Because of lower wind speeds expected at barge unloading stations, calibration over 3 to 6 mph. All wind runs in excess of 2000 ft. Because both Davis vane units were consistently higher than Gill and use of as-measured wind speeds would produce conservatively high emission factors, no correction applied to measured values..*
Watches/stopwatches	The field test leader will compare an elapsed time (> 1 hr) recorded by his watch against the US Naval Observatory master clock. Do not use if more than 3% difference. All crew members will synchronize watches (to the nearest minute) at the start of each test day. *Crew chief watch difference of 4 seconds in elapsed time of 1:45:17 (< 0.1% deviation). Crew member watches and wind data acquisition device were reset to crew chief watch each day.*

[a] Activities performed prior to going to the field, except as noted.

Table B-4. Criteria for Suspending or Terminating an Exposure Profiling Test

A test may be suspended or terminated if:[a]

1. Rainfall ensues during equipment setup or when sampling is in progress. (Exception made in the case of a source protected by a roof or other enclosure). *Test run DD-124 (barge unloading–marine leg) aborted after deployment because of heavy rainfall.*
2. Mean wind speed during sampling moves outside the 2 to 20 mph acceptable range for more than 20% of the sampling time. *Of barge loading, barge unloading, and vessel loading tests, 96% (23 of 24), 87% (13 of 15) and 85% (17 of 20) , respectively, are associated with a mean wind speeds of 2 mph (to 1 significant figure). Several tests interrupted because of unacceptable wind conditions and restarted when acceptable winds returned.*
3. The angle between the mean wind direction and the perpendicular to the measurement plane exceeds 45? for more than 20% of the sampling time. All 85 5-min wind direction averages logged with R. M. Young programmable translator during tests met this criterion.
4. Daylight is insufficient for safe equipment operation. (Exception made in case of adequate artificial lighting.) *Several tests of ship loading conducted under artificial light.*
5. Source conditions deviates from predetermined criteria (e.g., loading equipment malfunction, water splashing, truck spills). *No major occurrences during testing. Minor items noted on run sheets during individual test.*

[a] "Mean" denotes a 5-min average.

Appendix C

Photographs from the Test Program

Photo 1. Typical barge loading facility.

Photo 2. Continuous barge unloader.

Photo 3. Marine leg barge unloader.

Photo 4. Straight vessel (ship) loading spout.

Photo 5. Sloped vessel (ship) loading spout.

Photo 6. Sampling array for vessel loading tests.

Photo 7. Sampling array for barge unloading tests.

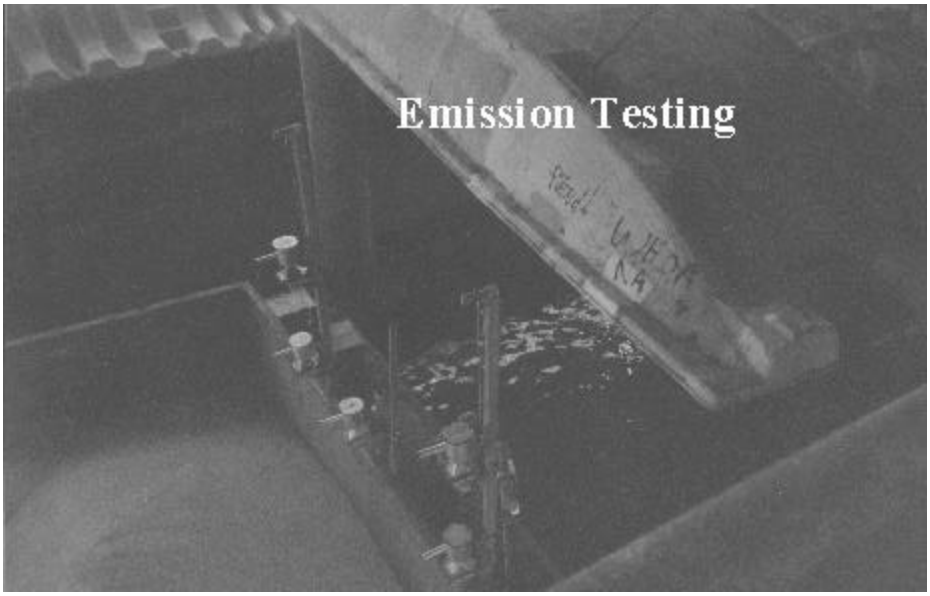

Photo 8. Sampling array for barge loading tests.

Appendix D
Example Calculations

Example Calculation—Barge Unloading Run DD-101

The barge unloading example calculation is based on run DD-101, which was conducted on November 8, 2000, began at 14:16:00 and ended at 14:26:30. The test duration was thus 10.5 minutes. The average temperature during the test was 78?F and the barometric pressure was 30.00 in Hg. All this information is taken from the run sheet for the particular test.

The following table shows the filter net weights for the cyclone samplers at each of four different locations:

Sampler location	Filter no. (Note 1)	Tare weight (mg) (Note 2)	Final weight (mg) (Note 2)	Net weight (mg)	Blank-corrected net weight (mg) (Note 3)
Left top	0051042	2731.10	2761.15	30.05	29.62
Left bottom	0051043	2688.25	2753.50	65.25	64.82
Right top	0051044	2681.25	2747.60	66.35	65.92
Right bottom	0051045	2705.90	2826.80	120.90	120.47

Notes:

1. Information taken from Field Filter Log
2. Information taken from filter weigh books
3. The blank-corrected net weights are based on an average blank value of 0.43 mg. Blank filter statistics are shown in Appendix E of the report.

Concentration values are determined by dividing the net catch values above by the total volume of air sampled. The volume of air sampled equals the sampling duration multiplied by the volumetric flow rate.

The following table illustrates how concentrations were determined for the example test.

Sampler location	VFC ID	Filter pressure (in H_2O) (Note 1)	Flow rate (acfm) (Note 2)	PM-10 concentration (?g/m^3) (Note 3)
Left top	67	14.80	41.3	2410
Left bottom	66	14.10	41.6	5240
Right top	74	14.12	41.2	5390
Right bottom	75	14.25	41.1	9860

Notes:

1. Average of pressures shown on Run Sheet.
2. Flow rates for the VFC samplers were developed after calibration with a BGI orifice. The VFC calibrations are of the form

$$Q = a\,(?P)^b$$

where Q = actual flow rate (acfm)
?P = filter pressure drop (in water)

and a and b are empirical constants for the different VFC units, as shown below:

VFC ID No.	a	b
67	49.6	–0.068
74	48.7	–0.064
75	49.3	–0.068
66	51.3	–0.079

3. The volumetric flow rate for the top left sampler (VFC 67) is found as

$$49.6\ (14.80)^{-0.068} = 41.3 \text{ acfm}$$

Over the 10.5 minute run, a total volume of 41.3 x 10.5 = 434 cubic feet (= 12.3 m^3) of air was sampled. The concentration is thus found as

$$29.62 \text{ mg}/12.3 \text{ m}^3 = 2410\ ?\text{g/m}^3$$

The upwind PM-10 measured for November 8 was 497 ?g/m^3 and the following plume sampling data are obtained:

Sampler location	Net PM-10 concentration (?g/m^3) (Note 1)	Mean wind speed (mph) (Note 2)	Net PM-10 Exposure (g/m^2) (Note 3)
Left top	1910	2.78	1.50
Left bottom	4740	1.71	2.28
Right top	4890	2.78	3.83
Right bottom	9360	1.71	4.51

Notes:

1. Measured concentration minus upwind concentration (497). For example, at the top left location

$$2410 - 497 = 1910\ ?\text{g/m}^3$$

2. Mean wind speeds were measured by Davis vane anemometers during a period roughly coincident with the test period. For run DD-101, the following wind runs were recorded

	Start time	Stop time	Wind run (ft)	Wind speed (fpm)	Wind speed (mph)
Top sampling height (2.4 ft)	14:15:15	14:27:00	2875	245	2.78
Bottom sampling height (7.4 ft)	14:14:15	14:27:00	1920	151	1.71

3. Exposure represents product of wind speed, net concentration, and test duration. For example, at the top left sampling location, exposure is calculated as

$$1910 \text{ mg/m}^3 \times 10.5 \text{ min} \times 2.78 \text{ mph} \times (88 \text{ fpm}/1 \text{ mph}) \times (0.3048 \text{ m}/1 \text{ ft}) \times (1 \text{ g}/10^6 \text{ mg})$$

$$= 1.50 \text{ g/m}^2$$

Exposure values are integrated over the plume area. An effective plume height is first found by extrapolating the net concentration to zero. On the left side, the net concentration is 1910 ug/m^3 at 7.4 ft and 4740 ? g/m^3 at 2.4 ft. Extrapolation to a zero net concentration value on the left leads to an effective height of 10.8 ft. Similarly, extrapolation of 4890 ? g/m^3 at 7.4 ft and 9360 ? g/m^3 at 2.4 ft leads to a value of 12.9 ft on the right side. The average plume height is thus found to be 11.8 ft.

The effective width of the emission source is the width (28 ft) of the barge hold (width taken from field run sheets). As noted in Section 3.3 of the report, the horizontal integration was found by multiplying the average exposure value at a particular height by the horizontal extent of the source. Thus, at the 2.4 ft height, the crosswind exposure is

$$28 \text{ ft} \times (2.28 \text{ g/m}^2 + 4.51 \text{ g/m}^2)/2 = 95.1 \text{ ft-g/m}^2$$

Similarly, at the 7.4 ft height, the crosswind exposure is

$$28 \text{ ft} \times (1.50 \text{ g/m}^2 + 3.83 \text{ g/m}^2)/2 = 74.6 \text{ ft-g/m}^2$$

The crosswind exposures are integrated over height (z) using the method illustrated in Figure 3 of the test report. Extrapolation of the crosswind exposures (95.1 at 2.4 ft and 74.6 at 7.4 ft) leads to a value of 105 ft-g/m^2 at zero height. The area of the trapezoid (from 0 to 7.4 ft) plus the area of the triangle from 7.4 ft to 11.8 ft in the figure below is given by

$$[7.4 \text{ ft} \times (105 \text{ ft-g/m}^2 + 74.6 \text{ ft-g/m}^2)/2] + [(11.8 \text{ ft} - 7.4 \text{ ft}) \times (74.6 \times \text{ft-g/m}^2)/2]$$

$$= 829 \text{ ft}^2 \text{ - g/m}^2 = 77 \text{ g} = 0.17 \text{ lb}$$

Because 291 tons of corn were unloaded during the test, the emission factor for run DD-101 is found as

$$0.17 \text{ lb}/291 \text{ ton} = 0.00058 \text{ lb/ton}$$

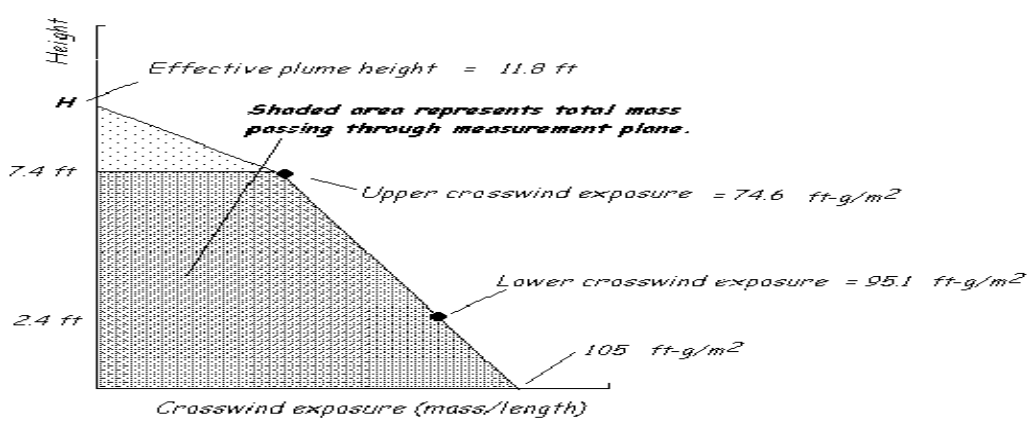

Example Calculation—Ship Loading Run DD-1

This example calculation is based on run DD-1, which was a ship loading test conducted at the test site. The test was conducted on November 7, 2000, began at 11:10:30 and ended at 11:20:30. The test duration was thus 10 minutes. The average temperature during the test was 80?F and the barometric pressure was 30.10 in Hg. All this information is taken from the run sheet for the particular test.

The following table shows the filter net weights calculated for the cyclone samplers at each of four different locations:

Sampler location	Filter No. (Note 1)	Tare weight (mg) (Note 2)	Final weight (mg) (Note 2)	Net weight (mg)	Blank-corrected net weight (mg) (Note 3)
Left top	0051003	2723.65	2731.85	8.20	7.77
Left bottom	0051004	2717.15	2721.95	4.80	4.37
Center top	0051005	2703.70	2710.00	6.30	5.87
Center bottom	0051006	2697.35	2707.15	9.80	9.37
Right top	0051007	2707.40	2711.30	3.90	3.47
Right bottom	0051008	2713.10	2719.30	6.20	5.77

Notes:

1. Information taken from Field Filter Log
2. Information taken from filter weigh books
3. The blank-corrected net weights are based on an average blank value of 0.43 mg. Blank filter statistics are shown in Appendix E of the report.

Sampler location	VFC ID	Filter pressure (in H_2O) (Note 1)	Flow rate (acfm) (Note 2)	PM-10 Concentration (ug/m^3) (Note 3)
Left top	67	14.53	41.3	664
Left bottom	78	14.27	40.0	386
Center top	74	14.18	41.1	504
Center bottom	75	14.25	41.1	805
Right top	69	14.25	41.2	297
Right bottom	66	14.45	41.5	491

Notes:

1. Average of pressures shown on Run Sheet.

2. Flow rates for the VFC samplers were developed after calibration with a BGI orifice. The VFC calibrations are of the form

$$Q = a\,(?P)^b$$

where Q = actual flow rate (acfm)
?P = filter pressure drop (in water)

and a and b are empirical constants for the different VFC units, as shown below:

VFC ID No.	a	b
67	49.6	–0.068
78	45.0	–0.044
74	48.7	–0.064
75	49.3	–0.068
69	50.9	–0.079
66	51.3	–0.079

3. The volumetric flow rate for the top left sampler (VFC 67) is found as

$$49.6\ (14.53)^{-0.068} = 41.3 \text{ acfm}$$

Over the 10 minute run, a total volume of 41.3 x 10 = 413 cubic feet (=11.7 m^3) of air was sampled. The concentration is thus found as

$$7.77 \text{ mg}/11.7 \text{ m}^3 = 664\ ?\text{g/m}^3$$

The upwind PM-10 concentration was not measured on this day because of welding being performed in the general area. In this case, the net concentration was conservatively set equal to the measured concentration.

Sampler location	PM-10 concentration (?g/m^3)	Net PM-10 concentration (?g/m^3) (Note 1)	Mean wind speed (mph) (Note 2)	Net PM-10 Exposure (g/m^2) (Note 3)
Left top	664	664	2.6	0.463
Left bottom	386	386	2.1	0.217
Center top	504	504	2.6	0.351
Center bottom	805	805	2.1	0.453
Right top	297	297	2.6	0.207
Right bottom	491	491	2.1	0.276

Notes:

1. Measured concentration minus upwind concentration.
2. Mean wind speeds were monitored for 5-min averages using Gill anemometers.
3. Exposure represents product of wind speed, net concentration, and test duration. For example, at the top left sampling location, exposure is calculated as

$$664\ ?\text{g/m}^3 \times 10 \text{ min} \times 2.6 \text{ mph} \times (88 \text{ fpm}/1\text{mph}) \times (0.3048 \text{ m}/1 \text{ ft}) \times (1 \text{ g}/10^6\ ?\text{g}) = 0.463 \text{ g/m}^2$$

Exposure values are integrated over the plume area in much the same way in the barge unloading example test (DD-101). An effective plume height is first found by extrapolating the net concentration to zero. For the center and right-hand arrays, the extrapolated plume heights are 15.1 and 15.8, respectively. On the left side, however, concentration increased with height. In this instance, the plume height is set equal to 70 ft, which represents the 90-th percentile of all plume heights extrapolated for ship loading tests. The average plume height is thus found to be 33.6 ft (= [15.1 + 15.8 + 70] /3).

The effective width of the emission source is the width (60 ft) of the ship hold (hatch). As noted in Section 3.3 of the report, the horizontal integration was found by multiplying the average exposure value at a particular height by the horizontal extent of the source. Thus, at the 7.4 ft height, the crosswind exposure is

$$60 \text{ ft} \times (0.463 \text{ g/m}^2 + 0.351 \text{ g/m}^2 + 0.207 \text{ g/m}^2) / 3 = 20.4 \text{ ft-g/m}^2$$

Similarly, at the 2.4 ft height, the crosswind exposure is

$$60 \text{ ft} \times (0.217 \text{ g/m}^2 + 0.453 \text{ g/m}^2 + 0.276 \text{ g/m}^2) / 3 = 18.9 \text{ ft-g/m}^2$$

The crosswind exposures are integrated over height (z) using the method illustrated in Figure 3 of the test report. Extrapolation of the crosswind exposures (20.4 at 7.4 ft and 18.9 at 2.4 ft) leads to a value of 18.2 ft-g / m^2 at zero height. The area of trapezoid in the figure below (from 0 to 7.4 ft) plus the area of the triangle from 7.4 ft to 11.8 ft is given by

$$[7.4 \text{ ft} \times (20.4 \text{ ft-g/m}^2 + 18.2 \text{ ft-g/m}^2)/2] + [(33.6 \text{ ft} - 7.4 \text{ ft}) \times (20.4 \times \text{ft-g/m}^2)/2]$$

$$= 410 \text{ ft}^2 \text{ - g/m}^2 = 38 \text{ g} = 0.084 \text{ lb}$$

Because 140 tons of corn were loaded during the test, the emission factor for run DD-1 is found as

$$0.084 \text{ lb}/140 \text{ ton} = 0.00060 \text{ lb/ton}$$

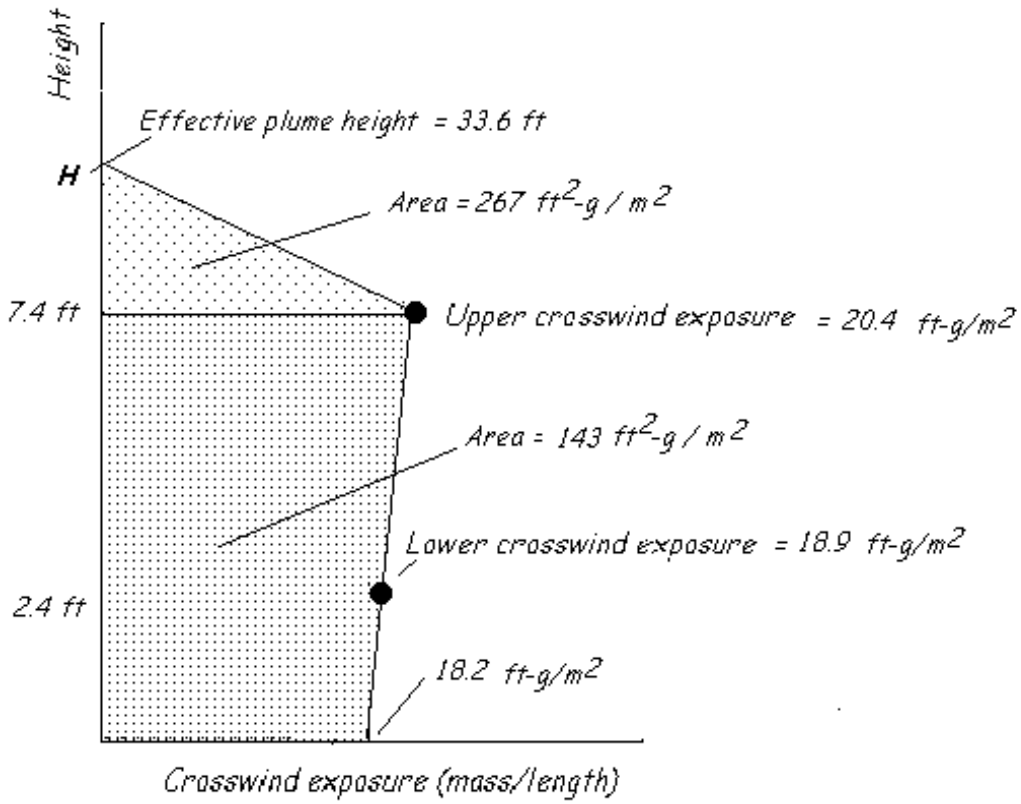
Height
Effective plume height = 33.6 ft
H
Area = 267 ft2-g / m2
7.4 ft
Upper crosswind exposure = 20.4 ft-g/m2
Area = 143 ft2-g / m2
Lower crosswind exposure = 18.9 ft-g/m2
2.4 ft
18.2 ft-g/m2
Crosswind exposure (mass/length)

Example Calculation for Barge Loading Run DD-201

This example calculation is based on run DD-201, which was a barge loading test conducted at the test site. The test was conducted on November 29, 2000, began at 10:22:00 and ended at 10:33:45. The test duration was thus 11.75 min. The average temperature during the test was 68?F and the barometric pressure was 30.20 in Hg. [All information taken from Run Sheet].

The following table shows the filter net weights calculated for the cyclone samplers at each of four different locations:

Substrate	Filter no. (Note 1)	Tare weight (mg) (Note 2)	Final weight (mg) (Note 2)	Net weight (mg)	Blank-corrected net weight (mg) (Note 3)
Stage 1	0038078	986.55	1004.10	17.55	17.31
Stage 2	0038079	983.65	1014.20	30.55	30.31
Stage 3	0038080	982.75	998.05	15.30	15.06
Backup filter	0051245	2710.00	2731.10	21.10	20.67

Notes:

1. Information taken from Field Filter Log
2. Information taken from filter weigh books
3. The blank-corrected net weights for Stages 1-3 are based on an average blank value of 0.24 mg, and of 0.43 mg for the backup filter. Blank filter statistics are shown in Appendix E of the report.

Concentration values are determined by dividing net catch values by the total volume of air sampled. The volume of air sampled equals the sampling duration multiplied by the volumetric flow rate. Flow rates for the 20-acfm impactor samplers were developed after calibration with a BGI orifice. The calibrations are of the form

$$B = a\,(?P) + b$$

where B = BGI orifice pressure drop (in H_2O)
$?P$ = back plate pressure drop (in H_2O)

and a and b are empirical constants for the different calibrations, as shown below:

Calibration date	a	b
11/06/00	1.043	3 E-05
11/10/00	0.9889	0.0207
11/29/00	1.093	–0.114
12/01/00	1.12	–0.0517

For run DD-201, the back plate pressure of 0.81 in H_2O is converted to an equivalent BGI pressure drop of

$$B = 1.093 \times 0.81 - 0.114 = 0.77 \text{ in } H_2O$$

The BGI pressure drop is first substituted into its annual calibration and the resulting flow rate converted from scfm to acfm

$$\text{BGI scfm} = 22.012\ (0.77)^{0.5041} = 19.3 \text{ scfm}$$

Flow rate (acfm) = 19.3 scfm x (29.92 in Hg / 30.2 in Hg) x ([460 + 68] / 537 R)
= 18.8 acfm

Thus, over the 11.75 min long test, a total air volume of

$$11.75 \text{ min} \times 18.8 \text{ acfm} = 221 \text{ cu ft} = 6.2 \text{ m}^3$$

was collected. The different stage concentrations are shown below:

PM size range	Cumulative net catch (mg)	Concentration (mg/m^3)
PM-15	83.35 (= 17.31 + 66.04)	13,400
PM-10.2	66.04 (= 30.31+ 35.73)	10,600
PM-4.2	35.73 (= 20.67 + 15.06)	5760
PM-2.1	20.67 (net catch on backup)	3330

Using the ratio of PM-2.1/PM-10.2 as a measurement of PM-2.5/PM-10 ratio, Run DD-201 produces a value of 0.31 (= 3330/10600).

The background on November 29 was measured as 18 ?g/m^3. Thus, the net PM-10 concentration through the 3-sided enclosure is 10,600 – 18 = 10,600 ?g/m^3. Air flow through the enclosure was measured by Davis vane anemometers during a period roughly coincident with the test period. For run DD-201, the following data were recorded:

Start time	Stop time	Wind run (ft)	Wind speed (fpm)	Wind speed (mph)
10:23:45	10:32:30	1435	164	1.86

The run sheet shows that enclosure had a 108? by 29? opening, with a total area of 22 sq ft or 2.0 m^2. The total PM-10 mass passing through the opening during the test is found as

$$10{,}600\ ?g/m^3 \times 11.75 \text{ min} \times 164 \text{ ft/min} \times 2.0 \text{ m}^2 \times [0.3048 \text{ m}/1 \text{ ft}] \times (1 \text{ g}/10^6\ ?g)$$

$$= 12.4 \text{ g} = 0.027 \text{ lb}$$

Because 54 tons of soybeans were loaded during the test, the emission factor for run DD-201 is found as

0.027 lb/54 ton = 0.00051 lb/ton

Appendix E
Detailed Test Data

Barge Unloading Tests

Run	Date	Sampler location	Sample ID	Flow rate (acfm)	Start time	Stop time	Duration (min)	Avg. temp. (deg. F)	Avg. B.P. (in. Hg)	Avg. filter pressure (in. H_2O)	Filter number	Tare wt. (mg)	Final wt. (mg)	Blank corrected (mg)	Downwind conc. (ug/m3)	Upwind conc. (ug/m3)	Net conc. (ug/m3)	Air flow (mph)	PM-10 exposure (g/m2)
DD-101	11/08/00	Left Top	67	41.3	14:16:00	14:26:30	10.50	78	30.00	14.80	0051042	2731.10	2761.15	29.62	2412	497	1915	2.78	1.499
		Left Bottom	66	41.6					30.00	14.10	0051043	2688.25	2753.50	64.82	5242	497	4745	1.71	2.285
		Right Top	74	41.2					30.00	14.12	0051044	2681.25	2747.60	65.92	5388	497	4891	2.78	3.829
		Right Bottom	75	41.1					30.00	14.25	0051045	2705.90	2826.80	120.47	9856	497	9359	1.71	4.507
DD-102	11/08/00	Left Top	67	41.3	14:38:15	14:49:00	10.75	80	29.90	14.65	0051047	2716.10	2722.40	5.87	467	497	-30	2.26	-0.020
		Left Bottom	66	41.6					29.90	14.10	0051048	2710.25	2739.45	28.77	2273	497	1776	1.19	0.609
		Right Top	74	41.1					29.90	14.55	0051049	2714.85	2746.10	30.82	2465	497	1968	2.26	1.282
		Right Bottom	75	41.0					29.90	14.87	0051050	2712.45	2755.90	43.02	3448	497	2951	1.19	1.012
DD -103	11/08/00	Left Top	67	41.4	15:07:06	15:17:15	10.15	78	29.90	14.45	0051051	2720.00	2806.95	86.52	7277	497	6780	2.45	4.522
		Left Bottom	66	41.5					29.90	14.35	0051052	2701.65	2888.90	186.82	15651	497	15154	1.68	6.930
		Right Top	74	41.1					29.90	14.30	0051053	2712.15	2850.00	137.42	11628	497	11131	2.45	7.424
		Right Bottom	75	41.1					29.90	14.40	0051054	2716.20	2878.70	162.07	13726	497	13229	1.68	6.050
DD-104	11/09/00	Left Top	75	41.2	10:13:45	10:28:15	14.50	58	30.15	13.80	0051056	2706.85	2782.70	75.42	4458	497	3961	7.84	12.078
		Left Bottom	74	41.2					30.15	13.90	0051057	2699.50	2849.90	149.97	8867	497	8370	7.14	23.241
		Right Top	66	41.8					30.15	13.40	0051058	2716.00	2783.40	66.97	3906	497	3409	7.84	10.394
		Right Bottom	78	40.1					30.15	13.20	0051059	2706.15	2850.35	143.77	8726	497	8229	7.14	22.850
										Note: Upwind background concentration set equal to value for previous day. See footnote "b" to Table 5 in text.									
DD-105	11/09/00	Left Top	75	41.2	10:48:45	11:00:00	11.25	56	30.15	13.65	0051060	2709.10	2735.70	26.17	1992	497	1495	5.99	2.703
		Left Bottom	74	41.2					30.15	13.65	0051061	2720.65	2785.00	63.92	4865	497	4368	5.35	7.052
		Right Top	66	41.8					30.15	13.35	0051062	2695.95	2739.00	42.62	3203	497	2706	5.99	4.891
		Right Bottom	78	40.0					30.15	13.85	0051063	2697.75	2791.75	93.57	7336	497	6839	5.35	11.039
										Note: Upwind background concentration set equal to value for previous day. See footnote "b" to Table 5 in text.									
DD-106	11/09/00	Left Top	75	41.2	11:14:15	11:21:00	6.75	58	30.15	13.82	0051064	2691.35	2778.55	86.77	11019	497	10522	5.29	10.077
		Left Bottom	74	41.2					30.15	13.85	0051065	2691.8	2788.50	96.27	12224	497	11727	6.45	13.694
		Right Top	66	41.8					30.15	13.40	0051066	2703	2747.10	43.67	5472	497	4975	5.29	4.764
		Right Bottom	78	40.1					30.15	13.42	0051067	2699.2	2838.20	138.57	18081	497	17584	6.45	20.532
										Note: Upwind background concentration set equal to value for previous day. See footnote "b" to Table 5 in text.									
DD-111	11/12/00	Left Top	69	40.9	12:54:00	12:59:00	5.00	64	30.30	15.67	0051121	2718.40	2939.25	220.42	38042	44	37998	2.49	12.688
		Left Bottom	71	38.1					30.30	14.90	0051122	2731.30	2872.35	140.62	26090	44	26046	2.43	8.487
		Right Top	75	40.9					30.30	15.60	0051123	2756.00	3431.55	675.12	116707	44	116663	2.49	38.955
		Right Bottom	67	41.1					30.30	16.02	0051124	2742.00	3481.55	739.12	127084	44	127040	2.43	41.398
DD-112	11/12/00	Left Top	69	41.0	13:14:00	13:18:30	4.50	72	30.30	15.25	0051126	2741.35	3047.40	305.62	58481	44	58437	1.88	13.259
		Left Bottom	71	38.0					30.30	15.10	0051127	2735.70	2963.70	227.57	46964	44	46920	1.74	9.853
		Right Top	75	40.8					30.30	15.70	0051128	2741.50	2928.65	186.72	35880	44	35836	1.88	8.131
		Right Bottom	67	41.1					30.30	15.80	0051129	2756.40	3106.80	349.97	66796	44	66752	1.74	14.018
DD-113	11/12/00	Left Top	69	41.0	13:29:30	13:35:01	5.52	72	30.20	15.27	0051130	2754.75	2955.50	200.32	31271	44	31227	1.6	7.392
		Left Bottom	71	38.1					30.20	14.95	0051131	2744.40	3022.75	277.92	46747	44	46703	1.62	11.194

Run	Date	Sampler location	Sample ID	Flow rate (acfm)	Start time	Stop time	Duration (min)	Avg. temp. (deg. F)	Avg. B.P. (in. Hg)	Avg. filter pressure (in. H_2O)	Filter number	Tare wt. (mg)	Final wt. (mg)	Blank corrected (mg)	Downwind conc. (ug/m3)	Upwind conc. (ug/m3)	Net conc. (ug/m3)	Air flow (mph)	PM-10 exposure (g/m2)
		Right Top	75	40.8					30.20	15.74	0051132	2749.85	2995.85	245.57	38499	44	38455	1.6	9.104
		Right Bottom	67	41.2					30.20	15.60	0051133	2758.15	3121.30	362.72	56423	44	56379	1.62	13.513
DD-114	11/12/00	Left Top	75	40.8	16:16:30	16:22:00	5.50	70	30.20	15.86	0051134	2762.00	2844.45	82.02	12904	44	12860	3.21	6.089
		Left Bottom	67	41.1					30.20	16.11	0051135	2746.75	2965.50	218.32	34138	44	34094	2.36	11.869
		Right Top	69	41.0					30.20	15.11	0051136	2745.55	3131.90	385.92	60376	44	60332	3.21	28.567
		Right Bottom	71	38.1					30.20	14.90	0051137	2746.20	3143.30	396.67	66906	44	66862	2.36	23.276
DD-115	11/12/00	Left Top	75	40.9	16:38:45	16:49:00	10.25	68	30.20	15.31	0051139	2750.50	2829.90	78.97	6651	44	6607	2.87	5.213
		Left Bottom	67	41.1					30.20	15.88	0051140	2734.00	2813.20	78.77	6603	44	6559	2.95	5.319
		Right Top	69	41.1					30.20	14.70	0051141	2750.20	2827.90	77.27	6472	44	6428	2.87	5.072
		Right Bottom	71	38.1					30.20	14.92	0051142	2755.65	2860.45	104.37	9447	44	9403	2.95	7.626
DD-116	11/12/00	Left Top	75	40.9	17:12:45	17:20:00	7.25	66	30.15	15.51	0051143	2757.70	2827.95	69.82	9049	44	9005	1.48	2.383
		Left Bottom	67	41.1					30.15	15.76	0051144	2747.40	2822.90	75.07	9670	44	9626	0.77	1.325
		Right Top	69	41.0					30.15	15.10	0051145	2760.25	2797.65	36.97	4771	44	4727	1.48	1.251
		Right Bottom	71	38.2					30.15	14.50	0051146	2766.55	2825.50	58.52	8125	44	8081	0.77	1.113
DD-121	11/15/00	Left Top	75	40.7	12:30:30	12:33:00	2.50	60	30.40	16.50	0051161	2734.90	2921.10	185.77	64474	36	64438	1.55	6.697
		Left Bottom	71	37.8					30.40	16.50	0051162	2737.10	3380.10	642.57	240395	36	240359	1.55	24.980
		Right Top	67	41.0					30.40	16.50	0051163	2738.95	3890.15	1150.77	396522	36	396486	1.55	41.206
		Right Bottom	78	39.7					30.40	16.50	0051164	2743.40	3302.00	558.17	198461	36	198425	1.55	20.622
DD-122	11/15/00	Left Top	75	40.8	12:54:00	12:56:30	2.50	62	30.40	15.88	0051166	2737.35	2890.85	153.07	52986	36	52950	1.88	6.675
		Left Bottom	71	37.9					30.40	15.55	0051167	2754.00	3102.70	348.27	129676	36	129640	1.88	16.342
		Right Top	67	41.1					30.40	15.90	0051168	2745.60	2970.00	223.97	76979	36	76943	1.88	9.699
		Right Bottom	78	39.9					30.40	15.40	0051169	2710.45	2987.25	276.37	97964	36	97928	1.88	12.344
DD-123	11/15/00	Left Top	75	40.8	13:09:30	13:12:00	2.50	60	30.40	16.01	0051170	2749.85	3074.95	324.67	112450	36	112414	1.49	11.231
		Left Bottom	71	38.0					30.40	15.05	0051171	2725.60	3045.00	318.97	118456	36	118420	1.49	11.831
		Right Top	67	41.1					30.40	16.06	0051172	2752.00	2917.40	164.97	56739	36	56703	1.49	5.665
		Right Bottom	78	39.8					30.40	15.60	0051173	2759.80	2918.65	158.42	56187	36	56151	1.49	5.610

Ship Loading Tests

Run	Date	Sampler location	Sampler ID	Flow rate (acfm)	Start time	Stop time	Duration (min)	Avg. temp. (deg. F)	Avg. B.P. (in. Hg)	Pressure (in. H2O)	Filter number	Tare wt. (mg)	Final wt. (mg)	Blank corrected Net catch (mg)	Downwind conc. (? g/m3)	Upwind conc. (? g/m3)	Net Conc. (? g/m3)	Wind speed (mph)	PM-10 exposure (g/m2)
DD-1	11/07/00	Left Top	67	41.35	11:10:30	11:20:30	10.00	80	30.10	14.53	0051003	2723.65	2731.85	7.77	663.6		663.6	2.60	0.4627
		Left Bottom	78	39.99	11:10:30	11:20:30	10.00	80	30.10	14.27	0051004	2717.15	2721.95	4.37	385.9		385.9	2.10	0.2174
		Center Top	74	41.14	11:10:30	11:20:30	10.00	80	30.10	14.18	0051005	2703.70	2710.00	5.87	503.9		503.9	2.60	0.3514
		Center Bottom	75	41.11	11:10:30	11:20:30	10.00	80	30.10	14.25	0051006	2697.35	2707.15	9.37	804.9		804.9	2.10	0.4533
		Right Top	69	41.23	11:10:30	11:20:30	10.00	80	30.10	14.25	0051007	2707.40	2711.30	3.47	297.2		297.2	2.60	0.2072
		Right Bottom	66	41.51	11:10:30	11:20:30	10.00	80	30.10	14.45	0051008	2713.10	2719.30	5.77	490.9		490.9	2.10	0.2765
DD-2	11/07/00	Left Top	67	41.40	12:14:30	12:45:30	31.00	82	30.05	14.30	0051009	2718.05	2729.50	11.02	303.3		303.3	2.73	0.6883
		Left Bottom	78	40.04	12:14:30	12:45:30	31.00	82	30.05	13.87	0051010	2718.10	2732.50	13.97	397.5		397.5	2.37	0.7832
		Center Top	74	41.09	12:14:30	12:45:30	31.00	82	30.05	14.45	0051011	2701.05	2709.45	7.97	221.0		221.0	2.73	0.5015
		Center Bottom	75	41.14	12:14:30	12:45:30	31.00	82	30.05	14.09	0051012	2701.35	2712.30	10.52	291.3		291.3	2.37	0.5740
		Right Top	69	41.17	12:14:30	12:45:30	31.00	82	30.05	14.53	0051013	2719.05	2728.00	8.52	235.8		235.8	2.73	0.5351
		Right Bottom	66	41.43	12:14:30	12:45:30	31.00	82	30.05	14.78	0051014	2730.50	2736.80	5.87	161.4		161.4	2.37	0.3180
DD-3	11/07/00	Left Top	67	41.37	13:54:00	14:17:00	23.00	84	30.05	14.43	0051015	2687.00	2986.95	299.52	11116.2		11116.2	3.45	23.6571
		Left Bottom	78	39.96	13:54:00	14:17:00	23.00	84	30.05	14.45	0051016	2697.25	3051.75	354.07	13603.3		13603.3	2.78	23.3279
		Center Top	74	41.05	13:54:00	14:17:00	23.00	84	30.05	14.65	0051017	2706.80	3078.15	370.92	13872.2		13872.2	3.45	29.5224
		Center Bottom	75	41.07	13:54:00	14:17:00	23.00	84	30.05	14.44	0051018	2695.85	3248.65	552.37	20648.9		20648.9	2.78	35.4102
		Right Top	69	41.09	13:54:00	14:17:00	23.00	84	30.05	14.87	0051019	2707.75	3311.35	603.17	22536.5		22536.5	3.45	47.9615
		Right Bottom	66	41.52	13:54:00	14:17:00	23.00	84	30.05	14.41	0051020	2709.60	3350.30	640.27	23679.2		23679.2	2.78	40.6067
DD-4	11/07/00	left Top	67	41.37	14:42:15	14:54:15	12.00	86	30.10	14.42	0051022	2713.80	2760.00	45.77	3255.6		3255.6	5.40	5.6580
		Left Bottom	78	40.01	14:42:15	14:54:15	12.00	86	30.10	14.10	0051023	2706.70	2775.20	68.07	5007.1		5007.1	3.90	6.2848
		Center Top	74	41.14	14:42:15	14:54:15	12.00	86	30.10	14.20	0051024	2698.20	2842.50	143.87	10292.4		10292.4	5.40	17.8876
		Center Bottom	75	41.03	14:42:15	14:54:15	12.00	86	30.10	14.67	0051025	2693.35	3069.65	375.87	26960.0		26960.0	3.90	33.8395
		Right Top	69	41.09	14:42:15	14:54:15	12.00	86	30.10	14.90	0051026	2672.10	2938.50	265.97	19050.0		19050.0	5.40	33.1077
		Right Bottom	66	41.56	14:42:15	14:54:15	12.00	86	30.10	14.23	0051027	2690.80	3008.20	316.97	22445.8		22445.8	3.90	28.1734
DD-5	11/07/00	Left Top	67	41.45	15:51:15	16:04:45	13.50	86	30.10	14.03	0051028	2693.05	2799.90	106.42	6715.9		6715.9	3.33	8.0974
		Left Bottom	78	40.04	15:51:15	16:04:45	13.50	86	30.10	13.88	0051029	2683.85	2824.10	139.82	9135.7		9135.7	2.63	8.6994
		Center Top	74	41.04	15:51:15	16:04:45	13.50	86	30.10	14.72	0051030	2698.25	2949.75	251.07	16002.4		16002.4	3.33	19.2940
		Center Bottom	75	41.01	15:51:15	16:04:45	13.50	86	30.10	14.78	0051031	2687.40	2965.65	277.82	17722.1		17722.1	2.63	16.8758
		Right Top	69	41.08	15:51:15	16:04:45	13.50	86	30.10	14.95	0051032	2713.60	2959.10	245.07	15606.9		15606.9	3.33	18.8171
		Right Bottom	66	41.48	15:51:15	16:04:45	13.50	86	30.10	14.55	0051033	2722.00	2913.30	190.87	12035.6		12035.6	2.63	11.4608
DD-6	11/07/00	Left Top	67	41.42	16:27:30	16:36:00	8.50	82	30.10	14.18	0051035	2705.00	2758.15	52.72	5288.0		5288.0	3.03	3.6527
		Left Bottom	78	40.00	16:27:30	16:36:00	8.50	82	30.10	14.20	0051036	2701.15	2760.50	58.92	6120.5		6120.5	2.33	3.2510
		Center Top	74	41.18	16:27:30	16:36:00	8.50	82	30.10	13.95	0051037	2704.30	2822.90	118.17	11921.4		11921.4	3.03	8.2347
		Center Bottom	75	41.14	16:27:30	16:36:00	8.50	82	30.10	14.08	0051038	2702.20	2791.50	88.87	8973.9		8973.9	2.33	4.7667
		Right Top	69	41.22	16:27:30	16:36:00	8.50	82	30.10	14.30	0051039	2699.80	2936.45	236.22	23808.2		23808.2	3.03	16.4455
		Right Bottom	66	41.40	16:27:30	16:36:00	8.50	82	30.10	14.92	0051040	2713.60	2818.95	104.92	10528.6		10528.6	2.33	5.5925

Run	Date	Sampler location	Sampler ID	Flow rate (acfm)	Start time	Stop time	Duration (min)	Avg. temp. (deg. F)	Avg. B.P. (in. Hg)	Pressure (in. H2O)	Filter number	Tare wt. (mg)	Final wt. (mg)	Blank corrected Net catch (mg)	Downwind conc. (? g/m3)	Upwind conc. (? g/m3)	Net Conc. (? g/m3)	Wind speed (mph)	PM-10 exposure (g/m2)
DD-11	11/10/00	Left Top	67	41.51	20:13:30	20:27:00	13.50	58	30.10	13.75	0051080	2693.40	2755.45	61.62	3883.4	126.0	3757.4	1.65	2.2447
		Left Bottom	75	41.24	20:13:30	20:27:00	13.50	58	30.10	13.62	0051081	2694.55	2743.95	48.97	3106.4	126.0	2980.4	1.22	1.3165
		Center Top	74	41.26	20:13:30	20:27:00	13.50	58	30.10	13.55	0051082	2700.25	2743.80	43.12	2733.9	126.0	2607.9	1.65	1.5580
		Center Bottom	66	41.76	20:13:30	20:27:00	13.50	58	30.10	13.37	0051083	2705.55	2747.60	41.62	2606.9	126.0	2480.9	1.22	1.0959
		Right Top	69	41.56	20:13:30	20:27:00	13.50	58	30.10	12.90	0051084	2691.70	2748.70	56.57	3560.7	126.0	3434.7	1.65	2.0519
		Right Bottom	71	38.44	20:13:30	20:27:00	13.50	58	30.10	13.20	0051085	2698.85	2738.65	39.37	2679.3	126.0	2553.3	1.22	1.1278
DD-12	11/10/00	Left Top	67	41.54	20:56:00	21:17:00	21.00	60	30.20	13.62	0051087	2692.50	2794.45	101.52	4110.3	126.0	3984.3	1.60	3.5904
		Left Bottom	75	41.25	20:56:00	21:17:00	21.00	60	30.20	13.54	0051088	2685.75	2769.70	83.52	3404.5	126.0	3278.5	1.22	2.2528
		Center Top	74	41.31	20:56:00	21:17:00	21.00	60	30.20	13.30	0051089	2694.35	2776.90	82.12	3343.1	126.0	3217.1	1.60	2.8991
		Center Bottom	66	41.76	20:56:00	21:17:00	21.00	60	30.20	13.40	0051090	2691.50	2792.85	100.92	4064.3	126.0	3938.3	1.22	2.7061
		Right Top	69	41.53	20:56:00	21:17:00	21.00	60	30.20	13.00	0051091	2707.55	2780.80	72.82	2948.3	126.0	2822.3	1.60	2.5433
		Right Bottom	71	38.55	20:56:00	21:17:00	21.00	60	30.20	12.75	0051092	2707.85	2790.15	81.87	3571.8	126.0	3445.8	1.22	2.3677
DD-13	11/11/00	Left Top	67	41.50	12:47:00	13:02:30	15.50	68	30.38	13.78	0051094	2694.75	2710.10	14.92	819.1	120.9	698.1	0.80	0.2322
		Left Bottom	75	41.20	12:47:00	13:02:30	15.50	68	30.38	13.78	0051095	2689.85	2701.30	11.02	609.3	120.9	488.4	0.55	0.1117
		Center Top	74	41.28	12:47:00	13:02:30	15.50	68	30.38	13.45	0051096	2708.10	2715.10	6.57	362.6	120.9	241.7	0.80	0.0804
		Center Bottom	66	41.67	12:47:00	13:02:30	15.50	68	30.38	13.74	0051097	2704.65	2719.10	14.02	766.5	120.9	645.5	0.55	0.1476
		Right Top	69	41.51	12:47:00	13:02:30	15.50	68	30.38	13.10	0051098	2730.70	2738.35	7.22	396.3	120.9	275.3	0.80	0.0916
		Right Bottom	71	38.52	12:47:00	13:02:30	15.50	68	30.38	12.85	0051099	2723.05	2742.30	18.82	1113.1	120.9	992.2	0.55	0.2268
DD-14	11/11/00	Left Top	67	41.16	13:26:00	13:33:15	7.25	66	30.15	15.56	0051102	2736.15	2746.20	9.62	1138.5	120.9	1017.5	1.40	0.2770
		Left Bottom	75	40.92	13:26:00	13:33:15	7.25	66	30.15	15.27	0051103	2728.00	2733.55	5.12	609.5	120.9	488.6	1.30	0.1235
		Center Top	74	40.95	13:26:00	13:33:15	7.25	66	30.15	15.25	0051104	2743.65	2746.80	2.72	323.5	120.9	202.6	1.40	0.0552
		Center Bottom	66	41.38	13:26:00	13:33:15	7.25	66	30.15	15.00	0051105	2725.35	2730.50	4.72	555.5	120.9	434.6	1.30	0.1099
		Right Top	69	41.19	13:26:00	13:33:15	7.25	66	30.15	14.44	0051106	2710.80	2719.35	8.12	960.2	120.9	839.3	1.40	0.2285
		Right Bottom	71	38.17	13:26:00	13:33:15	7.25	66	30.15	14.40	0051107	2728.30	2734.35	5.62	717.1	120.9	596.2	1.30	0.1507
DD-17	11/13/00	Left Top	74	40.96	16:52:00	17:07:00	15.00	60	30.20	15.20	0051148	2743.10	2767.60	24.07	1383.6	20.5	1363.0	1.80	0.9870
		Left Bottom	67	41.13	16:52:00	17:07:00	15.00	60	30.20	15.75	0051149	2743.55	2766.90	22.92	1312.1	20.5	1291.6	1.00	0.5196
		Center Top	75	41.08	16:52:00	17:07:00	15.00	60	30.20	14.42	0051150	2756.95	2777.00	19.62	1124.5	20.5	1104.0	1.80	0.7994
		Center Bottom	71	38.21	16:52:00	17:07:00	15.00	60	30.20	14.22	0051151	2750.35	2769.95	19.17	1181.1	20.5	1160.6	1.00	0.4669
		Right Top	69	41.20	16:52:00	17:07:00	15.00	60	30.20	14.40	0051152	2747.20	2761.90	14.27	815.5	20.5	794.9	1.80	0.5756
		Right Bottom	66	41.33	16:52:00	17:07:00	15.00	60	30.20	15.25	0051153	2730.35	2748.00	17.22	980.9	20.5	960.4	1.00	0.3864
DD-18	11/13/00	Left Top	74	41.01	18:00:00	18:15:00	15.00	58	30.20	14.91	0051155	2728.55	3381.05	652.07	37435.5	20.5	37414.9	2.60	39.1353
		Left Bottom	67	41.17	18:00:00	18:15:00	15.00	58	30.20	15.52	0051156	2719.80	2772.40	52.17	2983.6	20.5	2963.0	1.90	2.2648
		Center Top	75	41.12	18:00:00	18:15:00	15.00	58	30.20	14.20	0051157	2734.00	2794.35	59.92	3430.7	20.5	3410.1	2.60	3.5669
		Center Bottom	71	38.19	18:00:00	18:15:00	15.00	58	30.20	14.30	0051158	2724.50	2797.25	72.32	4458.0	20.5	4437.4	1.90	3.3918
		Right Top	69	41.21	18:00:00	18:15:00	15.00	58	30.20	14.37	0051159	2725.85	2783.40	57.12	3263.6	20.5	3243.0	2.60	3.3921
		Right Bottom	66	41.51	18:00:00	18:15:00	15.00	58	30.20	14.45	0051160	2739.40	2808.45	68.62	3892.1	20.5	3871.6	1.90	2.9593
DD-21	11/19/00	Left Top	71	38.34	15:07:45	15:32:45	25.00	56	30.20	13.62	0051190	2733.15	2793.10	59.52	2192.8	18.0	2174.8	2.70	3.9371
		Left Bottom	78	40.09	15:07:45	15:32:45	25.00	56	30.20	13.50	0051176	2739.35	2814.00	74.22	2615.5	18.0	2597.5	2.03	3.5354
		Center Top	74	41.00	15:07:45	15:32:45	25.00	56	30.20	14.95	0051184	2737.00	2829.85	92.42	3184.1	18.0	3166.1	2.70	5.7317

Run	Date	Sampler location	Sampler ID	Flow rate (acfm)	Start time	Stop time	Duration (min)	Avg. temp. (deg. F)	Avg. B.P. (in. Hg)	Pressure (in. H2O)	Filter number	Tare wt. (mg)	Final wt. (mg)	Blank corrected Net catch (mg)	Downwind conc. (? g/m3)	Upwind conc. (? g/m3)	Net Conc. (? g/m3)	Wind speed (mph)	PM-10 exposure (g/m2)
		Center Bottom	69	41.03	15:07:45	15:32:45	25.00	56	30.20	15.16	0051185	2753.45	2876.55	122.67	4223.2	18.0	4205.2	2.03	5.7237
		Right Top	67	41.13	15:07:45	15:32:45	25.00	56	30.20	15.70	0051191	2734.00	2851.40	116.97	4016.8	18.0	3998.8	2.70	7.2392
		Right Bottom	75	40.92	15:07:45	15:32:45	25.00	56	30.20	15.25	0051192	2742.00	2904.05	161.62	5579.2	18.0	5561.2	2.03	7.5694
DD-22	11/19/00	Left Top	71	38.29	15:55:00	16:07:45	12.75	56	30.20	13.85	0051180	2745.45	2783.80	37.92	2742.9	18.0	2724.9	2.60	2.4227
		Left Bottom	78	40.03	15:55:00	16:07:45	12.75	56	30.20	13.92	0051181	2739.65	2796.95	56.87	3934.9	18.0	3916.9	1.64	2.1966
		Center Top	74	40.97	15:55:00	16:07:45	12.75	56	30.20	15.13	0051186	2746.00	2802.55	56.12	3794.0	18.0	3776.0	2.60	3.3571
		Center Bottom	69	41.08	15:55:00	16:07:45	12.75	56	30.20	14.92	0051187	2748.35	2814.00	65.22	4397.0	18.0	4379.0	1.64	2.4558
		Right Top	67	41.17	15:55:00	16:07:45	12.75	56	30.20	15.52	0051182	2730.45	2800.35	69.47	4674.0	18.0	4656.0	2.60	4.1396
		Right Bottom	75	40.84	15:55:00	16:07:45	12.75	56	30.20	15.72	0051183	2749.00	2836.80	87.37	5926.1	18.0	5908.1	1.64	3.3133
DD-23	11/19/00	Left Top	71	38.36	16:25:00	16:47:45	22.75	56	30.20	13.55	0051193	2742.60	2830.50	87.47	3539.8	18.0	3521.8	2.50	5.3720
		Left Bottom	78	40.04	16:25:00	16:47:45	22.75	56	30.20	13.85	0051194	2752.25	2871.80	119.12	4618.1	18.0	4600.1	1.26	3.5366
		Center Top	74	40.98	16:25:00	16:47:45	22.75	56	30.20	15.05	0051195	2744.80	2882.65	137.42	5204.8	18.0	5186.8	2.50	7.9119
		Center Bottom	69	41.02	16:25:00	16:47:45	22.75	56	30.20	15.20	0051196	2754.90	2846.55	91.22	3451.8	18.0	3433.7	1.26	2.6399
		Right Top	67	41.17	16:25:00	16:47:45	22.75	56	30.20	15.50	0051197	2718.10	2897.15	178.62	6734.7	18.0	6716.7	2.50	10.2455
		Right Bottom	75	40.90	16:25:00	16:47:45	22.75	56	30.20	15.35	0051198	2756.25	3001.90	245.22	9306.4	18.0	9288.4	1.26	7.1409
DD-24	11/19/00	Left Top	67	41.47	18:40:15	18:56:15	16.00	54	30.30	13.92	0051199	2758.45	2996.55	237.67	12648.5	18.0	12630.5	2.00	10.8400
		Left Bottom	71	38.61	18:40:15	18:56:15	16.00	54	30.30	12.50	0051201	2722.85	3026.60	303.32	17340.9	18.0	17322.9	0.88	6.5044
		Center Top	78	40.15	18:40:15	18:56:15	16.00	54	30.30	13.05	0051202	2706.00	2937.60	231.17	12709.4	18.0	12691.4	2.00	10.8923
		Center Bottom	69	41.54	18:40:15	18:56:15	16.00	54	30.30	12.96	0051203	2723.30	3005.85	282.12	14988.3	18.0	14970.3	0.88	5.6210
		Right Top	75	41.22	18:40:15	18:56:15	16.00	54	30.30	13.70	0051204	2716.60	2942.20	225.17	12056.6	18.0	12038.6	2.00	10.3320
		Right Bottom	74	41.17	18:40:15	18:56:15	16.00	54	30.30	14.02	0051205	2720.25	2920.25	199.57	10699.2	18.0	10681.2	0.88	4.0106
DD-25	11/19/00	Left Top	67	41.77	19:23:00	19:43:30	20.50	52	30.30	12.55	0051207	2708.85	3044.90	335.62	13842.4	18.0	13824.4	1.10	8.3608
		Left Bottom	71	38.67	19:23:00	19:43:30	20.50	52	30.30	12.25	0051208	2709.70	3045.75	335.62	14951.4	18.0	14933.4	0.54	4.4337
		Center Top	78	40.12	19:23:00	19:43:30	20.50	52	30.30	13.24	0051209	2700.00	3085.75	385.32	16544.8	18.0	16526.7	1.10	9.9952
		Center Bottom	69	41.44	19:23:00	19:43:30	20.50	52	30.30	13.36	0051210	2706.85	3047.05	339.77	14122.6	18.0	14104.6	0.54	4.1876
		Right Top	75	41.19	19:23:00	19:43:30	20.50	52	30.30	13.86	0051211	2699.00	2947.30	247.87	10366.9	18.0	10348.9	1.10	6.2589
		Right Bottom	74	41.24	19:23:00	19:43:30	20.50	52	30.30	13.65	0051212	2716.55	2954.05	237.07	9902.8	18.0	9884.8	0.54	2.9348
DD-26	11/19/00	Left Top	67	41.75	20:08:15	20:25:45	17.50	48	30.30	12.62	0051213	2705.05	2937.30	231.82	11204.5	18.0	11186.5	1.60	8.4006
		Left Bottom	71	38.56	20:08:15	20:25:45	17.50	48	30.30	12.70	0051214	2728.20	3036.75	308.12	16125.9	18.0	16107.9	0.95	7.1822
		Center Top	78	40.19	20:08:15	20:25:45	17.50	48	30.30	12.75	0051215	2701.55	3037.40	335.42	16842.8	18.0	16824.8	1.60	12.6347
		Center Bottom	69	41.48	20:08:15	20:25:45	17.50	48	30.30	13.20	0051216	2682.95	3066.80	383.42	18651.2	18.0	18633.2	0.95	8.3082
		Right Top	75	41.35	20:08:15	20:25:45	17.50	48	30.30	13.10	0051217	2704.20	2994.80	290.17	14161.9	18.0	14143.9	1.60	10.6215
		Right Bottom	74	41.19	20:08:15	20:25:45	17.50	48	30.30	13.90	0051218	2698.20	2977.55	278.92	13664.1	18.0	13646.0	0.95	6.0845
DD-27	11/20/00	Left Top	75	41.13	11:50:30	12:08:30	18.00	62	30.40	14.15	0051219	2707.00	2966.10	258.67	12338.6	62.0	12276.7	2.90	17.1874
		Left Bottom	74	41.16	11:50:30	12:08:30	18.00	62	30.40	14.05	0051220	2709.00	3002.35	292.92	13960.8	62.0	13898.9	2.38	15.9694
		Center Top	71	38.39	11:50:30	12:08:30	18.00	62	30.40	13.42	0051221	2683.45	2920.85	236.97	12111.0	62.0	12049.1	2.90	16.8688
		Center Bottom	78	40.09	11:50:30	12:08:30	18.00	62	30.40	13.48	0051222	2708.65	2981.75	272.67	13344.6	62.0	13282.6	2.38	15.2613
		Right Top	67	41.54	11:50:30	12:08:30	18.00	62	30.40	13.60	0051223	2696.85	2838.25	140.97	6658.1	62.0	6596.1	2.90	9.2346

Run	Date	Sampler location	Sampler ID	Flow rate (acfm)	Start time	Stop time	Duration (min)	Avg. temp. (deg. F)	Avg. B.P. (in. Hg)	Pressure (in. H2O)	Filter number	Tare wt. (mg)	Final wt. (mg)	Blank corrected Net catch (mg)	Downwind conc. (? g/m3)	Upwind conc. (? g/m3)	Net Conc. (? g/m3)	Wind speed (mph)	PM-10 exposure (g/m2)
		Right Bottom	69	41.42	11:50:30	12:08:30	18.00	62	30.40	13.47	0051224	2689.30	2841.35	151.62	7182.1	62.0	7120.1	2.38	8.1808
DD-28	11/20/00	Left Top	75	41.12	12:30:30	12:52:30	22.00	66	30.40	14.20	0051226	2695.60	2975.65	279.62	10915.5	62.0	10853.5	2.74	17.5470
		Left Bottom	74	41.15	12:30:30	12:52:30	22.00	66	30.40	14.10	0051227	2687.00	3002.05	314.62	12271.5	62.0	12209.5	1.96	14.1200
		Center Top	71	38.41	12:30:30	12:52:30	22.00	66	30.40	13.33	0051228	2704.95	3031.90	326.52	13646.3	62.0	13584.3	2.74	21.9619
		Center Bottom	78	40.10	12:30:30	12:52:30	22.00	66	30.40	13.42	0051229	2697.00	3058.85	361.42	14469.2	62.0	14407.2	1.96	16.6616
		Right Top	67	41.46	12:30:30	12:52:30	22.00	66	30.40	13.99	0051230	2714.75	2941.20	226.02	8751.0	62.0	8689.0	2.74	14.0476
		Right Bottom	69	41.34	12:30:30	12:52:30	22.00	66	30.40	13.79	0051231	2693.10	2991.05	297.52	11552.3	62.0	11490.4	1.96	13.2884
DD-29	11/20/00	Left Top	75	41.16	13:13:45	13:27:30	13.75	66	30.40	14.02	0051233	2708.50	2786.40	77.47	4834.5	62.0	4772.5	2.62	4.6112
		Left Bottom	74	41.16	13:13:45	13:27:30	13.75	66	30.40	14.05	0051234	2694.70	2777.65	82.52	5148.6	62.0	5086.7	2.15	4.0330
		Center Top	71	38.33	13:13:45	13:27:30	13.75	66	30.40	13.68	0051235	2707.70	2813.00	104.87	7027.1	62.0	6965.1	2.62	6.7297
		Center Bottom	78	40.07	13:13:45	13:27:30	13.75	66	30.40	13.65	0051236	2695.95	2816.65	120.27	7709.7	62.0	7647.7	2.15	6.0636
		Right Top	67	41.47	13:13:45	13:27:30	13.75	66	30.40	13.92	0051237	2689.25	2752.00	62.32	3859.3	62.0	3797.3	2.62	3.6690
		Right Bottom	69	41.43	13:13:45	13:27:30	13.75	66	30.40	13.44	0051238	2732.55	2808.85	75.87	4703.9	62.0	4641.9	2.15	3.6804

Barge Loading Tests

Run	Date	Start time	Stop time	Avg. temp. (deg. F)	Avg. B.P. (in. Hg)	Back plate pressure (in. H_2O)	Substrate	Filter no.	Tare wt (mg)	Final wt (mg)	Blank corrected (mg)	Downwind conc. (? g/m3)	Upwind Conc. (ug/m3)	Net PM-10 Conc. (? g/m3)	Wind Flow (mph)
DD-201	11/29/00	10:22:00	10:33:45	68	30.20	0.81	Stage 1	0038078	986.55	1004.10	17.31	10356	18	10337	1.86
		10:22:00	10:33:45	68	30.20	0.81	Stage 2	0038079	983.65	1014.20	30.31				
		10:22:00	10:33:45	68	30.20	0.81	Stage 3	0038080	982.75	998.05	15.06				
		10:22:00	10:33:45	68	30.20	0.81	Backup	0051245	2710.00	2731.10	20.67				
DD-202	11/29/00	10:38:45	10:48:30	70	30.20	0.80	Stage 1	0038075	992.05	1059.00	66.71	44663	18	44645	1.70
		10:38:45	10:48:30	70	30.20	0.80	Stage 2	0038076	982.15	1110.80	128.41				
		10:38:45	10:48:30	70	30.20	0.80	Stage 3	0038077	992.60	1054.65	61.81				
		10:38:45	10:48:30	70	30.20	0.80	Backup	0051246	2711.95	2757.70	45.32				
DD-203	11/29/00	11:00:00	11:08:00	70	30.20	0.80	Stage 1	0038072	981.50	1014.20	32.46	39088	18	39070	1.31
		11:00:00	11:08:00	70	30.20	0.80	Stage 2	0038073	993.10	1085.50	92.16				
		11:00:00	11:08:00	70	30.20	0.80	Stage 3	0038074	984.40	1026.90	42.26				
		11:00:00	11:08:00	70	30.20	0.80	Backup	0051247	2725.95	2761.10	34.72				
DD-204	11/29/00	11:21:00	11:32:00	76	30.10	0.80	Stage 1	0038056	980.20	1015.95	35.51	21708	18	21690	1.50
		11:21:00	11:32:00	76	30.10	0.80	Stage 2	0038070	993.85	1070.15	76.06				
		11:21:00	11:32:00	76	30.10	0.80	Stage 3	0038071	994.55	1021.75	26.96				
		11:21:00	11:32:00	76	30.10	0.80	Backup	0051248	2731.10	2758.70	27.17				
DD-205	11/29/00	12:58:00	13:09:15	68	30.10	0.80	Stage 1	0038041	993.10	1128.30	134.96	88993	18	88974	1.77
		12:58:00	13:09:15	68	30.10	0.80	Stage 2	0038042	987.80	1321.55	333.51				
		12:58:00	13:09:15	68	30.10	0.80	Stage 3	0038043	984.20	1108.15	123.71				
		12:58:00	13:09:15	68	30.10	0.80	Backup	0051249	2726.40	2807.30	80.47				
DD-206	11/29/00	13:15:15	13:19:30	68	30.15	0.80	Stage 1	0038053	982.20	1084.35	101.91	184857	18	184838	1.92
		13:15:15	13:19:30	68	30.15	0.80	Stage 2	0038054	981.90	1232.20	250.06				
		13:15:15	13:19:30	68	30.15	0.80	Stage 3	0038055	981.70	1087.95	106.01				
		13:15:15	13:19:30	68	30.15	0.80	Backup	0051250	2707.30	2774.30	66.57				
DD-207	11/29/00	13:49:00	13:56:45	64	30.20	0.80	Stage 1	0038050	977.00	1189.70	212.46	216107	18	216089	2.33
		13:49:00	13:56:45	64	30.20	0.80	Stage 2	0038051	980.50	1498.10	517.36				
		13:49:00	13:56:45	64	30.20	0.80	Stage 3	0038052	979.30	1206.45	226.91				
		13:49:00	13:56:45	64	30.20	0.80	Backup	0051251	2704.65	2856.45	151.37				

Run	Date	Start time	Stop time	Avg. temp. (deg. F)	Avg. B.P. (in. Hg)	Back plate pressure (in. H_2O)	Substrate	Filter no.	Tare wt (mg)	Final wt (mg)	Blank corrected (mg)	Downwind conc. (? g/m3)	Upwind Conc. (ug/m3)	Net PM-10 Conc. (? g/m3)	Wind Flow (mph)
DD-208	11/29/00	14:04:00	14:11:15	64	30.10	0.80	Stage 1	0038047	984.20	1194.85	210.41	201785	18	201767	1.82
		14:04:00	14:11:15	64	30.10	0.80	Stage 2	0038048	984.00	1465.55	481.31				
		14:04:00	14:11:15	64	30.10	0.80	Stage 3	0038049	979.50	1159.60	179.86				
		14:04:00	14:11:15	64	30.10	0.80	Backup	0051252	2711.15	2830.15	118.57				
DD-209	11/29/00	15:04:00	15:19:00	66	30.20	0.80	Stage 1	0038133	916.80	1006.45	89.41	35337	18	35319	1.87
		15:04:00	15:19:00	66	30.20	0.80	Stage 2	0038134	913.40	1078.70	165.06				
		15:04:00	15:19:00	66	30.20	0.80	Stage 3	0038135	926.75	1001.55	74.56				
		15:04:00	15:19:00	66	30.20	0.80	Backup	0051253	2718.95	2764.30	44.92				
DD-210	11/29/00	15:24:30	15:33:00	64	30.10	0.80	Stage 1	0038136	903.35	1064.20	160.61	150413	18	150395	3.07
		15:24:30	15:33:00	64	30.10	0.80	Stage 2	0038137	914.90	1335.80	420.66				
		15:24:30	15:33:00	64	30.10	0.80	Stage 3	0038138	915.30	1074.65	159.11				
		15:24:30	15:33:00	64	30.10	0.80	Backup	0051254	2720.50	2822.60	101.67				
DD-211	11/29/00	15:42:30	15:48:45	64	30.10	0.80	Stage 1	0038139	909.30	1093.60	184.06	204952	18	204934	2.76
		15:42:30	15:48:45	64	30.10	0.80	Stage 2	0038140	916.50	1320.60	403.86				
		15:42:30	15:48:45	64	30.10	0.80	Stage 3	0038141	911.60	1094.25	182.41				
		15:42:30	15:48:45	64	30.10	0.80	Backup	0051255	2712.65	2809.55	96.47				
DD-212	11/29/00	16:04:00	16:11:45	64	30.10	0.80	Stage 1	0038044	984.30	1150.05	165.51	169339	18	169321	2.38
		16:04:00	16:11:45	64	30.10	0.80	Stage 2	0038045	983.80	1406.20	422.16				
		16:04:00	16:11:45	64	30.10	0.80	Stage 3	0038046	978.20	1156.95	178.51				
		16:04:00	16:11:45	64	30.10	0.80	Backup	0051256	2705.95	2805.20	98.82				
DD-221	12/02/00	9:05:00	9:15:30	36	30.30	0.90	Stage 1	0038199	914.10	999.20	84.86	18431	173	18258	2.84
		9:05:00	9:15:30	36	30.30	0.90	Stage 2	0038200	912.85	980.00	66.91				
		9:05:00	9:15:30	36	30.30	0.90	Stage 3	0038201	905.85	929.20	23.11				
		9:05:00	9:15:30	36	30.30	0.90	Backup	0051260	2687.20	2707.95	20.32				
DD-222	12/02/00	9:23:15	9:30:00	36	30.30	0.90	Stage 1	0038195	921.85	1003.85	81.76	31763	173	31590	2.95
		9:23:15	9:30:00	36	30.30	0.90	Stage 2	0038196	903.70	977.60	73.66				
		9:23:15	9:30:00	36	30.30	0.90	Stage 3	0038197	922.00	944.50	22.26				
		9:23:15	9:30:00	36	30.30	0.90	Backup	0051261	2688.35	2715.10	26.32				

Run	Date	Start time	Stop time	Avg. temp. (deg. F)	Avg. B.P. (in. Hg)	Back plate pressure (in. H_2O)	Substrate	Filter no.	Tare wt (mg)	Final wt (mg)	Blank corrected (mg)	Downwind conc. (? g/m3)	Upwind Conc. (ug/m3)	Net PM-10 Conc. (? g/m3)	Wind Flow (mph)
DD-223	12/02/00	10:00:00	10:07:30	36	30.20	0.90	Stage 1	0038190	916.90	1080.80	163.66	60027	173	59854	2.97
		10:00:00	10:07:30	36	30.20	0.90	Stage 2	0038192	926.20	1095.40	168.96				
		10:00:00	10:07:30	36	30.20	0.90	Stage 3	0038194	922.05	972.40	50.11				
		10:00:00	10:07:30	36	30.20	0.90	Backup	0051262	2711.30	2748.50	36.77				
DD-224	12/02/00	10:13:00	10:16:00	38	30.20	0.90	Stage 1	0038187	914.75	967.40	52.41	38523	173	38350	2.16
		10:13:00	10:16:00	38	30.20	0.90	Stage 2	0038188	917.90	958.70	40.56				
		10:13:00	10:16:00	38	30.20	0.90	Stage 3	0038189	919.80	931.60	11.56				
		10:13:00	10:16:00	38	30.20	0.90	Backup	0051263	2716.85	2731.10	13.82				
DD-225	12/02/00	11:49:00	11:56:30	36	30.20	0.90	Stage 1	0038180	915.30	1032.45	116.91	49645	173	49472	2.08
		11:49:00	11:56:30	36	30.20	0.90	Stage 2	0038175	905.10	1041.35	136.01				
		11:49:00	11:56:30	36	30.20	0.90	Stage 3	0038176	918.85	964.40	45.31				
		11:49:00	11:56:30	36	30.20	0.90	Backup	0051264	2702.80	2733.50	30.27				
DD-226	12/02/00	12:02:15	12:08:00	36	30.30	0.90	Stage 1	0038183	916.00	1040.00	123.76	65166	173	64993	2.08
		12:02:15	12:08:00	36	30.30	0.90	Stage 2	0038178	913.10	1056.70	143.36				
		12:02:15	12:08:00	36	30.30	0.90	Stage 3	0038179	912.50	952.15	39.41				
		12:02:15	12:08:00	36	30.30	0.90	Backup	0051265	2693.00	2724.30	30.87				
DD-227	12/02/00	12:30:00	12:36:00	36	30.20	0.90	Stage 1	0038181	921.70	1103.85	181.91	76339	173	76166	3.69
		12:30:00	12:36:00	36	30.20	0.90	Stage 2	0038182	921.45	1095.90	174.21				
		12:30:00	12:36:00	36	30.20	0.90	Stage 3	0038174	914.25	971.20	56.71				
		12:30:00	12:36:00	36	30.20	0.90	Backup	0051266	2683.45	2713.25	29.37				
DD-228	12/02/00	12:41:00	12:45:00	34	30.20	0.90	Stage 1	0038184	925.15	1041.35	115.96	68439	173	68266	2.00
		12:41:00	12:45:00	34	30.20	0.90	Stage 2	0038185	924.30	1026.20	101.66				
		12:41:00	12:45:00	34	30.20	0.90	Stage 3	0038186	922.90	956.25	33.11				
		12:41:00	12:45:00	34	30.20	0.90	Backup	0051267	2709.40	2730.00	20.17				
DD-229	12/02/00	14:13:45	14:20:30	32	30.20	0.90	Stage 1	0038121	909.75	1158.50	248.51	112103	173	111930	3.50
		14:13:45	14:20:30	32	30.20	0.90	Stage 2	0038120	915.25	1204.80	289.31				
		14:13:45	14:20:30	32	30.20	0.90	Stage 3	0038119	910.00	1006.40	96.16				
		14:13:45	14:20:30	32	30.20	0.90	Backup	0051268	2696.25	2737.75	41.07				
DD-230	12/2/00	14:25:00	14:32:00	32	30.30	0.90	Stage 1	0038122	911.20	1258.20	346.76	156948	173	156775	3.20

Run	Date	Start time	Stop time	Avg. temp. (deg. F)	Avg. B.P. (in. Hg)	Back plate pressure (in. H_2O)	Substrate	Filter no.	Tare wt (mg)	Final wt (mg)	Blank corrected (mg)	Downwind conc. (? g/m3)	Upwind Conc. (ug/m3)	Net PM-10 Conc. (? g/m3)	Wind Flow (mph)
		14:25:00	14:32:00	32	30.30	0.90	Stage 2	0038124	906.95	1330.65	423.46				
		14:25:00	14:32:00	32	30.30	0.90	Stage 3	0038127	912.20	1052.05	139.61				
		14:25:00	14:32:00	32	30.30	0.90	Backup	0051269	2710.30	2769.00	58.27				
DD-231	12/2/00	14:51:00	14:58:00	32	30.20	0.90	Stage 1	0038171	907.85	1262.30	354.21	183647	173	183474	2.90
		14:51:00	14:58:00	32	30.20	0.90	Stage 2	0038172	916.45	1427.90	511.21				
		14:51:00	14:58:00	32	30.20	0.90	Stage 3	0038173	914.30	1056.00	141.46				
		14:51:00	14:58:00	32	30.20	0.90	Backup	0051270	2695.60	2768.00	71.97				
DD-232	12/2/00	15:03:15	15:11:00	32	30.20	0.90	Stage 1	0038168	919.10	1268.60	349.26	157359	173	157186	2.60
		15:03:15	15:11:00	32	30.20	0.90	Stage 2	0038169	917.45	1379.25	461.56				
		15:03:15	15:11:00	32	30.20	0.90	Stage 3	0038170	913.85	1062.30	148.21				
		15:03:15	15:11:00	32	30.20	0.90	Backup	0051271	2694.25	2772.35	77.67				

Run	Date	Sampler Start time	Sampler Stop time	Avg. Temp. (deg. F)	Avg. B.P. (in. Hg)	Back plate pressure (in. H_2O)	Substrate	Filter #	Tare wt (mg)	Final wt (mg)	Blank corrected (mg)	PM-10 conc. (? g/m3)	Upwind conc. (? g/m3)	Net PM-10 conc. (ug/m3)	Wind flow (mph)
DD-201	11/29/00	10:22:00	10:33:45	68	30.20	0.81	Stage 1	0038078	986.55	1004.10	17.31	10356	18	10337	1.86
		10:22:00	10:33:45	68	30.20	0.81	Stage 2	0038079	983.65	1014.20	30.31				
		10:22:00	10:33:45	68	30.20	0.81	Stage 3	0038080	982.75	998.05	15.06				
		10:22:00	10:33:45	68	30.20	0.81	Backup	0051245	2710.00	2731.10	20.67				
DD-202	11/29/00	10:38:45	10:48:30	70	30.20	0.80	Stage 1	0038075	992.05	1059.00	66.71	44663	18	44645	1.70
		10:38:45	10:48:30	70	30.20	0.80	Stage 2	0038076	982.15	1110.80	128.41				
		10:38:45	10:48:30	70	30.20	0.80	Stage 3	0038077	992.60	1054.65	61.81				
		10:38:45	10:48:30	70	30.20	0.80	Backup	0051246	2711.95	2757.70	45.32				
DD-203	11/29/00	11:00:00	11:08:00	70	30.20	0.80	Stage 1	0038072	981.50	1014.20	32.46	39088	18	39070	1.31
		11:00:00	11:08:00	70	30.20	0.80	Stage 2	0038073	993.10	1085.50	92.16				
		11:00:00	11:08:00	70	30.20	0.80	Stage 3	0038074	984.40	1026.90	42.26				
		11:00:00	11:08:00	70	30.20	0.80	Backup	0051247	2725.95	2761.10	34.72				
DD-204	11/29/00	11:21:00	11:32:00	76	30.10	0.80	Stage 1	0038056	980.20	1015.95	35.51	21708	18	21690	1.50
		11:21:00	11:32:00	76	30.10	0.80	Stage 2	0038070	993.85	1070.15	76.06				
		11:21:00	11:32:00	76	30.10	0.80	Stage 3	0038071	994.55	1021.75	26.96				
		11:21:00	11:32:00	76	30.10	0.80	Backup	0051248	2731.10	2758.70	27.17				
DD-205	11/29/00	12:58:00	13:09:15	68	30.10	0.80	Stage 1	0038041	993.10	1128.30	134.96	88993	18	88974	1.77
		12:58:00	13:09:15	68	30.10	0.80	Stage 2	0038042	987.80	1321.55	333.51				
		12:58:00	13:09:15	68	30.10	0.80	Stage 3	0038043	984.20	1108.15	123.71				
		12:58:00	13:09:15	68	30.10	0.80	Backup	0051249	2726.40	2807.30	80.47				
DD-206	11/29/00	13:15:15	13:19:30	68	30.15	0.80	Stage 1	0038053	982.20	1084.35	101.91	184857	18	184838	1.92
		13:15:15	13:19:30	68	30.15	0.80	Stage 2	0038054	981.90	1232.20	250.06				
		13:15:15	13:19:30	68	30.15	0.80	Stage 3	0038055	981.70	1087.95	106.01				
		13:15:15	13:19:30	68	30.15	0.80	Backup	0051250	2707.30	2774.30	66.57				
DD-207	11/29/00	13:49:00	13:56:45	64	30.20	0.80	Stage 1	0038050	977.00	1189.70	212.46	216107	18	216089	2.33
		13:49:00	13:56:45	64	30.20	0.80	Stage 2	0038051	980.50	1498.10	517.36				
		13:49:00	13:56:45	64	30.20	0.80	Stage 3	0038052	979.30	1206.45	226.91				
		13:49:00	13:56:45	64	30.20	0.80	Backup	0051251	2704.65	2856.45	151.37				

Run	Date	Sampler Start time	Sampler Stop time	Avg. Temp. (deg. F)	Avg. B.P. (in. Hg)	Back plate pressure (in. H_2O)	Substrate	Filter #	Tare wt (mg)	Final wt (mg)	Blank corrected (mg)	PM-10 conc. (? g/m3)	Upwind conc. (? g/m3)	Net PM-10 conc. (ug/m3)	Wind flow (mph)
DD-208	11/29/00	14:04:00	14:11:15	64	30.10	0.80	Stage 1	0038047	984.20	1194.85	210.41	201785	18	201767	1.82
		14:04:00	14:11:15	64	30.10	0.80	Stage 2	0038048	984.00	1465.55	481.31				
		14:04:00	14:11:15	64	30.10	0.80	Stage 3	0038049	979.50	1159.60	179.86				
		14:04:00	14:11:15	64	30.10	0.80	Backup	0051252	2711.15	2830.15	118.57				
DD-209	11/29/00	15:04:00	15:19:00	66	30.20	0.80	Stage 1	0038133	916.80	1006.45	89.41	35337	18	35319	1.87
		15:04:00	15:19:00	66	30.20	0.80	Stage 2	0038134	913.40	1078.70	165.06				
		15:04:00	15:19:00	66	30.20	0.80	Stage 3	0038135	926.75	1001.55	74.56				
		15:04:00	15:19:00	66	30.20	0.80	Backup	0051253	2718.95	2764.30	44.92				
DD-210	11/29/00	15:24:30	15:33:00	64	30.10	0.80	Stage 1	0038136	903.35	1064.20	160.61	150413	18	150395	3.07
		15:24:30	15:33:00	64	30.10	0.80	Stage 2	0038137	914.90	1335.80	420.66				
		15:24:30	15:33:00	64	30.10	0.80	Stage 3	0038138	915.30	1074.65	159.11				
		15:24:30	15:33:00	64	30.10	0.80	Backup	0051254	2720.50	2822.60	101.67				
DD-211	11/29/00	15:42:30	15:48:45	64	30.10	0.80	Stage 1	0038139	909.30	1093.60	184.06	204952	18	204934	2.76
		15:42:30	15:48:45	64	30.10	0.80	Stage 2	0038140	916.50	1320.60	403.86				
		15:42:30	15:48:45	64	30.10	0.80	Stage 3	0038141	911.60	1094.25	182.41				
		15:42:30	15:48:45	64	30.10	0.80	Backup	0051255	2712.65	2809.55	96.47				
DD-212	11/29/00	16:04:00	16:11:45	64	30.10	0.80	Stage 1	0038044	984.30	1150.05	165.51	169339	18	169321	2.38
		16:04:00	16:11:45	64	30.10	0.80	Stage 2	0038045	983.80	1406.20	422.16				
		16:04:00	16:11:45	64	30.10	0.80	Stage 3	0038046	978.20	1156.95	178.51				
		16:04:00	16:11:45	64	30.10	0.80	Backup	0051256	2705.95	2805.20	98.82				
DD-221	12/02/00	9:05:00	9:15:30	36	30.30	0.90	Stage 1	0038199	914.10	999.20	84.86	18431	173	18258	2.84
		9:05:00	9:15:30	36	30.30	0.90	Stage 2	0038200	912.85	980.00	66.91				
		9:05:00	9:15:30	36	30.30	0.90	Stage 3	0038201	905.85	929.20	23.11				
		9:05:00	9:15:30	36	30.30	0.90	Backup	0051260	2687.20	2707.95	20.32				
DD-222	12/02/00	9:23:15	9:30:00	36	30.30	0.90	Stage 1	0038195	921.85	1003.85	81.76	31763	173	31590	2.95
		9:23:15	9:30:00	36	30.30	0.90	Stage 2	0038196	903.70	977.60	73.66				
		9:23:15	9:30:00	36	30.30	0.90	Stage 3	0038197	922.00	944.50	22.26				
		9:23:15	9:30:00	36	30.30	0.90	Backup	0051261	2688.35	2715.10	26.32				

Run	Date	Sampler Start time	Sampler Stop time	Avg. Temp. (deg. F)	Avg. B.P. (in. Hg)	Back plate pressure (in. H_2O)	Substrate	Filter #	Tare wt (mg)	Final wt (mg)	Blank corrected (mg)	PM-10 conc. (? g/m3)	Upwind conc. (? g/m3)	Net PM-10 conc. (ug/m3)	Wind flow (mph)
DD-223	12/02/00	10:00:00	10:07:30	36	30.20	0.90	Stage 1	0038190	916.90	1080.80	163.66	60027	173	59854	2.97
		10:00:00	10:07:30	36	30.20	0.90	Stage 2	0038192	926.20	1095.40	168.96				
		10:00:00	10:07:30	36	30.20	0.90	Stage 3	0038194	922.05	972.40	50.11				
		10:00:00	10:07:30	36	30.20	0.90	Backup	0051262	2711.30	2748.50	36.77				
DD-224	12/02/00	10:13:00	10:16:00	38	30.20	0.90	Stage 1	0038187	914.75	967.40	52.41	38523	173	38350	2.16
		10:13:00	10:16:00	38	30.20	0.90	Stage 2	0038188	917.90	958.70	40.56				
		10:13:00	10:16:00	38	30.20	0.90	Stage 3	0038189	919.80	931.60	11.56				
		10:13:00	10:16:00	38	30.20	0.90	Backup	0051263	2716.85	2731.10	13.82				
DD-225	12/02/00	11:49:00	11:56:30	36	30.20	0.90	Stage 1	0038180	915.30	1032.45	116.91	49645	173	49472	2.08
		11:49:00	11:56:30	36	30.20	0.90	Stage 2	0038175	905.10	1041.35	136.01				
		11:49:00	11:56:30	36	30.20	0.90	Stage 3	0038176	918.85	964.40	45.31				
		11:49:00	11:56:30	36	30.20	0.90	Backup	0051264	2702.80	2733.50	30.27				
DD-226	12/02/00	12:02:15	12:08:00	36	30.30	0.90	Stage 1	0038183	916.00	1040.00	123.76	65166	173	64993	2.08
		12:02:15	12:08:00	36	30.30	0.90	Stage 2	0038178	913.10	1056.70	143.36				
		12:02:15	12:08:00	36	30.30	0.90	Stage 3	0038179	912.50	952.15	39.41				
		12:02:15	12:08:00	36	30.30	0.90	Backup	0051265	2693.00	2724.30	30.87				
DD-227	12/02/00	12:30:00	12:36:00	36	30.20	0.90	Stage 1	0038181	921.70	1103.85	181.91	76339	173	76166	3.69
		12:30:00	12:36:00	36	30.20	0.90	Stage 2	0038182	921.45	1095.90	174.21				
		12:30:00	12:36:00	36	30.20	0.90	Stage 3	0038174	914.25	971.20	56.71				
		12:30:00	12:36:00	36	30.20	0.90	Backup	0051266	2683.45	2713.25	29.37				
DD-228	12/02/00	12:41:00	12:45:00	34	30.20	0.90	Stage 1	0038184	925.15	1041.35	115.96	68439	173	68266	2.00
		12:41:00	12:45:00	34	30.20	0.90	Stage 2	0038185	924.30	1026.20	101.66				
		12:41:00	12:45:00	34	30.20	0.90	Stage 3	0038186	922.90	956.25	33.11				
		12:41:00	12:45:00	34	30.20	0.90	Backup	0051267	2709.40	2730.00	20.17				
DD-229	12/02/00	14:13:45	14:20:30	32	30.20	0.90	Stage 1	0038121	909.75	1158.50	248.51	112103	173	111930	3.50
		14:13:45	14:20:30	32	30.20	0.90	Stage 2	0038120	915.25	1204.80	289.31				
		14:13:45	14:20:30	32	30.20	0.90	Stage 3	0038119	910.00	1006.40	96.16				
		14:13:45	14:20:30	32	30.20	0.90	Backup	0051268	2696.25	2737.75	41.07				

Run	Date	Sampler Start time	Sampler Stop time	Avg. Temp. (deg. F)	Avg. B.P. (in. Hg)	Back plate pressure (in. H_2O)	Substrate	Filter #	Tare wt (mg)	Final wt (mg)	Blank corrected (mg)	PM-10 conc. (? g/m3)	Upwind conc. (? g/m3)	Net PM-10 conc. (ug/m3)	Wind flow (mph)
DD-230	12/2/00	14:25:00	14:32:00	32	30.30	0.90	Stage 1	0038122	911.20	1258.20	346.76	156948	173	156775	3.20
		14:25:00	14:32:00	32	30.30	0.90	Stage 2	0038124	906.95	1330.65	423.46				
		14:25:00	14:32:00	32	30.30	0.90	Stage 3	0038127	912.20	1052.05	139.61				
		14:25:00	14:32:00	32	30.30	0.90	Backup	0051269	2710.30	2769.00	58.27				
DD-231	12/2/00	14:51:00	14:58:00	32	30.20	0.90	Stage 1	0038171	907.85	1262.30	354.21	183647	173	183474	2.90
		14:51:00	14:58:00	32	30.20	0.90	Stage 2	0038172	916.45	1427.90	511.21				
		14:51:00	14:58:00	32	30.20	0.90	Stage 3	0038173	914.30	1056.00	141.46				
		14:51:00	14:58:00	32	30.20	0.90	Backup	0051270	2695.60	2768.00	71.97				
DD-232	12/2/00	15:03:15	15:11:00	32	30.20	0.90	Stage 1	0038168	919.10	1268.60	349.26	157359	173	157186	2.60
		15:03:15	15:11:00	32	30.20	0.90	Stage 2	0038169	917.45	1379.25	461.56				
		15:03:15	15:11:00	32	30.20	0.90	Stage 3	0038170	913.85	1062.30	148.21				
		15:03:15	15:11:00	32	30.20	0.90	Backup	0051271	2694.25	2772.35	77.67				

Daily Upwind Data

Sampler ID	Date	Test series run (DD-)	Start time	Stop time	Elapsed time (min)	Filter pressure (in. H2O)	Barometric pressure (in Hg)	Dry bulb (F)	Filter number	Final weight (mg)	Tare weight (mg)	Blank corrected net catch (mg)	Upwind conc. (?g/m3)	Flow rate (acfm)
71	11/7/00	**							51002	2718.9	2718			
71	11/8/00	101	9:22	16:16	414	13.69	29.98	79.5	51041	2938.4	2714.55	223.42	496.9	38.356
71	11/9/00	104	8:40	12:23	224	16.34	30.15	57.5	51055	3853.15	2702	1150.72	4802.7***	37.816
78	11/10/00	11	16:38	21:31	293	13.69	30.13	58.7	51079	2733.9	2691.6	41.87	126	40.054
78	11/11/00	13	8:40	17:40	540	13.51	30.28	63.3	51093	2788	2713.45	74.12	120.9	40.077
78	11/12/00	114	10:37	18:00	443	14.84	30.24	68	51120	2759.5	2736.95	22.12	44.2	39.91
78	11/13/00	17	12:47	19:42	415	15.3	30.18	58.4	51147	2765.6	2755.55	9.62	20.5	39.856
66	11/15/00	121	9:09	17:25	496	15.35	30.4	59	51165	2780.75	2759.45	20.87	36	41.31
70	11/19/00	21	12:40	21:07	507	15.52	30.25	53.7	51189	2762	2751.65	9.92	18	38.376
70	11/20/00	27	10:06	16:03	357	14.33	30.4	64	51232	2725.85	2701.2	24.22	62	38.665
75	11/29/00	201	9:55	15:20	325	13.83	30.15	66.6	51244	2713.3	2706.15	6.72	18.4	39.792
75	12/2/00	221	7:57	15:50	473	13.1	30.22	34.8	51259	2773.85	2682.4	91.02	172.6	39.369

** Never started sampler because of welding in vicinity all day

*** The upwind sampler was affected by material falling from a conveyor. At start-up the conveyor was inactive but began to operate while the field crew was on the barge. The measured value is not considered representative of the upwind conditions at the barge unloading station. The previous day's upwind concentration was used to characterize background for runs DD-104 to DD-106.

f

Blank Filters

Filter no.	Tare	Final	Net	Filter no.	Tare	Final	Net
0038062	996.00	996.40	0.40	0051068	2691.70	2691.85	0.15
0038064	991.25	991.00	–0.25	0051069	2720.45	2720.70	0.25
0038065	991.85	991.90	0.05	0051070	2704.00	2704.55	0.55
0038081	989.95	990.20	0.25	0051071	2702.30	2702.40	0.10
0038082	975.55	975.75	0.20	0051072	2705.40	2705.55	0.15
0038083	989.50	989.75	0.25	0051073	2687.45	2687.95	0.50
0038100	992.20	992.20	0.00	0051074	2693.50	2694.00	0.50
0038102	986.15	986.15	0.00	0051075	2708.10	2708.65	0.55
0038103	978.95	979.15	0.20	0051076	2705.65	2706.00	0.35
0038116	914.35	914.60	0.25	0051077	2687.50	2688.30	0.80
0038117	917.15	917.25	0.10	0051078	2696.10	2697.50	1.40
0038118	900.50	900.40	–0.10	0051101	2756.95	2757.40	0.45
0038126	915.80	916.40	0.60	0051108	2736.05	2736.30	0.25
0038129	913.30	914.45	1.15	0051109	2743.40	2743.85	0.45
0038130	917.05	917.35	0.30	0051110	2736.20	2736.40	0.20
0038131	914.35	914.80	0.45	0051111	2737.60	2737.65	0.05
0038132	904.20	904.30	0.10	0051112	2765.30	2765.45	0.15
0038202	914.50	914.90	0.40	0051113	2758.00	2758.25	0.25
		Mean	**0.24**	0051114	2753.10	2752.95	-0.15
		Std Dev	**0.31**	0051115	2749.15	2748.70	-0.45
				0051116	2741.00	2741.25	0.25
				0051117	2758.55	2758.90	0.35
				0051118	2760.00	2760.35	0.35
				0051119	2734.40	2734.50	0.10
				0051239	2710.85	2711.15	0.30
				0051240	2704.45	2704.65	0.20
				0051241	2709.00	2710.05	1.05
				0051242	2712.80	2713.40	0.60
				0051243	2721.90	2722.65	0.75
				0051257	2693.95	2694.40	0.45
				0051258	2710.15	2711.80	1.65
				0051272	2696.15	2697.00	0.85
				0051273	2702.70	2703.55	0.85
						Mean	**0.43**
						Std Dev	**0.41**