United States
Environmental Protection
Agency

Office of Air Quality
Planning and Standards
Research Triangle Park, NC 27711

EPA-454/R-00-025A
May 2000

AIR

EPA

Final Report

Hot Mix Asphalt Plants
Truck Loading and Silo Filling
Manual Methods Testing

Asphalt Plant C
Los Angeles, California

Volume 1 of 8

Office of Air Quality
Clean Air
OAQPS
Planning and Standards

FINAL REPORT

HOT MIX ASPHALT PLANTS
TRUCK LOADING AND SILO FILLING
MANUAL METHODS TESTING
ASPHALT PLANT C, LOS ANGELES, CALIFORNIA

VOLUME 1 OF 8
TEXT AND APPENDIX A

EPA Contract No. 68-D-98-004
Work Assignment No. 3-02

Prepared for:

Mr. Michael L. Toney (MD-19)
Work Assignment Manager
SMTG, EMC, OAQPS
U.S. Environmental Protection Agency
Research Triangle Park, NC 27711

May 2000

Submitted by

PACIFIC ENVIRONMENTAL SERVICES, INC.
5001 S. Miami Blvd., Suite 300
Post Office Box 12077
Research Triangle Park, NC 27709-2077
(919) 941-0333
FAX (919) 941-0234

DISCLAIMER

The information in this document has been funded wholly or in part by the Office of Air Quality Planning and Standards, U.S. Environmental Protection Agency (EPA) under contract to Pacific Environmental Services, Inc. (PES). PES performed the work presented in this document under three EPA contracts and seven Work Assignments; EPA Contract No. 68-D-98-004, Work Assignment Nos. 1-08, 2-07, 3-02, and 3-05, EPA Contract No. 68-D-70002, Work Assignment Nos. 0-05 and 1-07; and EPA Contract No. 68-D-70069, Work Assignment No. 2-16. This document has been prepared by PES, reviewed following PES' internal quality assurance procedures, and approved by PES for distribution. This document has been subjected to the Agency's review, and has been approved by EPA for publication as an EPA document. Mention of trade names does not constitute endorsement by the EPA or PES.

TABLE OF CONTENTS

VOLUME 1 Page

1.0 INTRODUCTION 1-1

2.0 SUMMARY OF TEST RESULTS 2-1

2.1 OVERVIEW 2-1
2.2 TREATMENT OF NON-DETECTS AND ESTIMATES 2-2
2.3 TUNNEL EXHAUST DUCT 2-2
2.4 SILO EXHAUST DUCT RESULTS 2-12
2.5 PM AND MCEM DEPOSITION ESTIMATES 2-15
2.6 METEOROLOGICAL STATION RESULTS 2-15

3.0 PROCESS DESCRIPTION 3-1

3.1 COORDINATION BETWEEN TESTING AND PROCESS OPERATIONS 3-3
3.2 PROCESS MONITORING DURING TESTING 3-3
3.3 PROCESS SAMPLES 3-4
3.4 VELOCITY OF AIR ACROSS TOP OF TRANSPORT TRUCKS DURING LOAD-OUT 3-5

4.0 SAMPLING LOCATIONS 4-1

4.1 TUNNEL EXHAUST DUCT 4-1
4.2 SILO EXHAUST DUCT 4-1

5.0 SAMPLING AND ANALYTICAL PROCEDURES 5-1

5.1 LOCATION OF MEASUREMENT SITES AND SAMPLE/VELOCITY TRAVERSE POINTS 5-1
5.2 DETERMINATION OF EXHAUST GAS VOLUMETRIC FLOW RATE 5-1
5.3 DETERMINATION OF EXHAUST GAS DRY MOLECULAR WEIGHT 5-3
5.4 DETERMINATION OF EXHAUST GAS MOISTURE CONTENT 5-3

TABLE OF CONTENTS (CONTINUED)

VOLUME 1 (CONTINUED)

Page

5.5 DETERMINATION OF PM AND MCEM 5-3
5.6 DETERMINATION OF VOHAPs 5-3
5.7 DETERMINATION OF SVOHAPs 5-7
5.8 DETERMINATION OF WIND SPEED, WIND DIRECTION, AMBIENT TEMPERATURE, AND AMBIENT HUMIDITY 5-7
5.9 ESTIMATE OF PM AND MCEM ON THE CEILING OF THE LOAD-OUT TUNNEL DOWNSTREAM OF SILO NO. 5 5-7
5.10 ESTIMATE OF PM AND MCEM DEPOSITION ON THE INSIDE WALLS OF THE SILO NO. 2 EXHAUST PLENUM 5-9
5.11 ESTIMATE OF PM AND MCEM DEPOSITION ON THE INSIDE WALLS OF THE SILO EXHAUST DUCT 5-9
5.12 ESTIMATE OF PM AND MCEM DEPOSITION ON THE INSIDE WALLS OF THE TUNNEL EXHAUST DUCT 5-10

6.0 QUALITY ASSURANCE/QUALITY CONTROL (QA/QC) PROCEDURES AND RESULTS 6-1

6.1 CALIBRATION AND PREPARATION OF APPARATUS 6-1
6.2 REAGENTS AND GLASSWARE PREPARATION 6-2
6.3 ON-SITE SAMPLING 6-3
6.4 SAMPLE RECOVERY 6-4
6.5 LABORATORY ANALYTICAL QA/QC PROCEDURES 6-5
6.6 QA COORDINATOR FIELD AUDIT 6-7

APPENDIX A - TEST RESULTS AND CALCULATIONS 1

A.1 TED TEST RESULTS 3
A.2 SED TEST RESULTS 101
A.3 EXAMPLE CALCULATIONS 195
A.4 PARTICULATE DEPOSITION DATA 204
A.5 CAPTURE EFFICIENCY CALCULATIONS 211

VOLUME 2

APPENDIX B - PROCESS DATA 1

B.1 PRODUCTION RECORDS FOR 7/24/98 THROUGH 7/28/98 3
B.2 PRODUCT STORAGE RECORDS FOR 7/25/98 THROUGH 7/28/98 9

TABLE OF CONTENTS (CONTINUED)

VOLUME 2 (CONTINUED)

APPENDIX B - PROCESS DATA (CONTINUED)

B.3 LOAD-OUT RECORDS USED IN TED EMISSION CALCULATIONS .. 19
B.4 LOAD-OUT RECORDS FOR 6/18/98 THROUGH 7/26/98 33
B.5 LOAD-OUT RECORDS FOR 7/24/98 THROUGH 7/28/98 44
B.6 SILO NO. 2 LOAD-IN RECORDS USED IN SED EMISSION CALCULATIONS 68
B.7 ASPHALT TEMPERATURES AT LOAD-OUT 90
B.8 MASS CHANGE RESULTS FROM ASTM TESTS PERFORMED ON ASPHALT CEMENT SAMPLES 93
B.9 VELOCITY OF AIR ACROSS TOP OF TRANSPORT TRUCKS DURING LOAD-OUT 100
B.10 METALS ANALYSIS OF PROCESS SAMPLES 104

VOLUME 3

APPENDIX C - FIELD DATA 1

C.1 TED FIELD DATA 2
C.2 SED FIELD DATA 59
C.3 METEOROLOGICAL STATION DATA 89
C.4 ON-SITE GC/MS REPORT AND DATA 118

APPENDIX D - QA/QC DATA 230

APPENDIX E - PROJECT PARTICIPANTS 280

APPENDIX F - TEST METHODS

F.1 EPA METHOD 1
F.2 EPA METHOD 1A
F.3 EPA METHOD 2
F.4 EPA METHOD 4
F.5 EPA METHOD 18
F.6 EPA METHOD 315
F.7 SW-846 METHOD 0010
F.8 SW-846 METHOD 0030

TABLE OF CONTENTS (CONCLUDED)

VOLUME 4

APPENDIX G - ANALYTICAL DATA 1

G.1 PM AND MCEM DATA 1a
G.2 PAH/SVOHAPS CASE NARRATIVE AND PAH DATA 1k

VOLUME 5

APPENDIX G - ANALYTICAL DATA (CONTINUED) 659

G.3 SVOHAPS DATA 659

VOLUME 6

APPENDIX G - ANALYTICAL DATA (CONTINUED) 1248

G.3 SVOHAPS DATA (CONCLUDED) 1248

VOLUME 7

APPENDIX G - ANALYTICAL DATA (CONTINUED) 1a

G.4 VOHAPS DATA 1c

VOLUME 8

APPENDIX G - ANALYTICAL DATA (CONCLUDED) 1a

G.4 VOHAPS DATA (CONCLUDED) 1c
G.5 EPA METHOD 18 REPORT AND DATA 260

LIST OF TABLES

Page

Table 1.1 Test Log Tunnel Exhaust Duct, Asphalt Plant C - California 1-4
Table 1.2 Test Log Silo Exhaust Duct, Asphalt Plant C - California 1-5

Table 2.1 Summary of Results, Production Emissions for PM, MCEM, PAH, SVOHAP and VOHAP, Asphalt Plant C, California - July 1998 2-3
Table 2.2 Summary of Results, Average PM and MCEM Emissions, Asphalt Plant C, California - July 1998 2-4
Table 2.3 Summary of Results, Average PAH and SVOHAP Emissions, Asphalt Plant C, California - July 1998 2-5
Table 2.4 Summary of Results, Average VOHAP Emissions, Asphalt Plant C, California - July 1998 2-6
Table 2.5 Summary of Results, PAHS, SVOHAPS, & VOHAPS Average Emissions, Silo Exhaust Duct - Asphalt Plant C, California, July 1998 2-7
Table 2.6 PM and MCEM Emissions Sampling and Exhaust Gas Parameters Normal Operations, Tunnel Exhaust Duct, Asphalt Plant C - California .. 2-16
Table 2.7 PM and MCEM Exhaust Gas Concentrations and Emission Rates, Normal Operations, Tunnel Exhaust Duct, Asphalt Plant C - California 2-17
Table 2.8 PAHs and Semi-Volatile Organics Emissions Sampling and Exhaust Gas Parameters, Normal Operations, Tunnel Exhaust Duct, Asphalt Plant C - California 2-18
Table 2.9 PAHs Exhaust Gas Concentrations and Emission Rates, Normal Operations Tunnel Exhaust Duct, Asphalt Plant C - California 2-19
Table 2.10 Semi-Volatile Organics Exhaust Gas Concentrations and Emission Rates, Normal Operations, Tunnel Exhaust Duct, Asphalt Plant C - California .. 2-21
Table 2.11 Volatile Organics - SW-846 Method 0030 Emissions Sampling and Exhaust Gas Parameters, Normal Operations, Tunnel Exhaust Duct, Asphalt Plant C - California 2-30
Table 2.12 Volatile Organics - SW-846 Method 0030 Exhaust Gas Concentrations and Emission Rates, Normal Operation, Tunnel Exhaust Duct, Asphalt Plant C - California 2-31
Table 2.13 Volatile Organics - EPA Method 18 Emissions Sampling and Exhaust Gas Parameters, Normal Operations, Tunnel Exhaust Duct, Asphalt Plant C - California 2-36
Table 2.14 Volatile Organics - EPA Method 18 Exhaust Gas Concentrations and Emission Rates, Normal Operations, Tunnel Exhaust Duct, Asphalt Plant C - California 2-37
Table 2.15 On-Site GC/MS Volatile Organics Exhaust Gas Concentrations and Emission Rates with Vost (SW-846 Method 0030) and EPA Method 18 Comparison, Tunnel Exhaust Duct, Asphalt Plant C - California 7/24/98 . 2-38
Table 2.16 PM and MCEM Emissions Sampling and Exhaust Gas Parameters, Background Condition, Tunnel Exhaust Duct, Asphalt Plant C - California 2-39

LIST OF TABLES (CONTINUED)

Page

Table 2.17 PM and MCEM Exhaust Gas Concentrations and Emission Rates, Background Condition, Tunnel Exhaust Duct, Asphalt Plant C - California 2-40

Table 2.18 PAHs and Semi-Volatile Organics Emissions Sampling and Exhaust Gas Parameters Background Condition, Tunnel Exhaust Duct, Asphalt Plant C - California 2-41

Table 2.19 PAHs Exhaust Gas Concentrations and Emission Rates, Background Condition, Tunnel Exhaust Duct, Asphalt Plant C - California 2-42

Table 2.20 Semi-Volatile Organics Exhaust Gas Concentrations and Emission Rates, Background Condition, Tunnel Exhaust Duct, Asphalt Plant C - California 2-44

Table 2.21 Volatile Organics - SW-846 Method 0030 Emissions Sampling and Exhaust Gas Parameters, Background Condition, Tunnel Exhaust Duct, Asphalt Plant C - California 2-53

Table 2.22 Volatile Organics - SW-846 Method 0030 Exhaust Gas Concentrations and Emission Rates, Background Condition, Tunnel Exhaust Duct, Asphalt Plant C - California 2-54

Table 2.23 Volatile Organics - EPA Method 18 Emissions Sampling and Exhaust Gas Parameters, Background Condition, Tunnel Exhaust Duct, Asphalt Plant C - California 2-59

Table 2.24 Volatile Organics - EPA Method 18 Exhaust Gas Concentrations and Emission Rates, Background Condition, Tunnel Exhaust Duct, Asphalt Plant C - California 2-60

Table 2.25 Sample Log Silo Exhaust Duct, Asphalt Plant C - California 2-61

Table 2.26 PM and MCEM Emissions Sampling and Exhaust Gas Parameters, Silo Exhaust Duct, Asphalt Plant C - California 2-62

Table 2.27 PM and MCEM Exhaust Gas Concentrations and Emission Rates, Silo Exhaust Duct, Asphalt Plant C - California 2-63

Table 2.28 PAHs and Semi-Volatile Organics Emissions Sampling and Exhaust Gas Parameters, Silo Exhaust Duct, Asphalt Plant C - California 2-64

Table 2.29 PAHs Exhaust Gas Concentrations and Emission Rates, Silo Exhaust Duct, Asphalt Plant C - California 2-65

Table 2.30 Semi-Volatile Organics Exhaust Gas Concentrations and Emission Rates, Silo Exhaust Duct, Asphalt Plant C - California 2-67

Table 2.31 Volatile Organics - SW-846 Method 0030 Emissions Sampling and Exhaust Gas Parameters, Silo Exhaust Duct, Asphalt Plant C - California . 2-76

Table 2.32 Volatile Organics - SW-846 Method 0030 Exhaust Gas Concentrations and Emission Rates, Silo Exhaust Duct, Asphalt Plant C - California 2-77

Table 2.33 On-Site GC/MS Volatile Organics Exhaust Gas Concentrations and Emission Rates with Vost (SW-846 Method 0030) Comparison, Silo Exhaust Duct, Asphalt Plant C - California 7/25/98 2-82

LIST OF TABLES (CONCLUDED)

Page

Table 2.34 PM and MCEM Deposition Estimates, Asphalt Plant C - California 2-83
Table 2.35 Meteorological Data Summary, Asphalt Plant C - California 2-84

Table 3.1 Load-out Data Used in TED Emission Calculations 3-6
Table 3.2 Load-in Data for Silo No. 2 Used in SED Emission Calculations 3-7
Table 3.3 Asphalt Temperatures at Load-out, Asphalt Plant C, California 3-8
Table 3.4 Mass Change of Asphalt, Asphalt Plant C, California 3-9
Table 3.5 Results of Metals Analyses of Asphalt Samples, Asphalt Plant C, California 3-10
Table 3.6 Air Velocity Over Transport Trucks During Load-out, Asphalt Plant C, California 3-11

Table 5.1 Summary of Sampling and Analytical Methods, Asphalt Plant C, California 5-2

Table 6.1 Summary of Temperature Sensor Calibration Data 6-8
Table 6.2 Summary of Pitot Tube Dimensional Data 6-9
Table 6.3 Summary of Dry Gas Meter and Orifice Calibration Data 6-10
Table 6.4 Summary of EPA Method 315 and SW-846 Method 0010 Field Sampling QA/QC Data 6-11
Table 6.5 Summary of EPA Method 315 Blank Sample Catches 6-12
Table 6.6 SW-846 Method 0010 PAHs Field and Laboratory Blanks Results, Tunnel Exhaust Duct 6-13
Table 6.7 SW-846 Method 0010 PAHs Field and Laboratory Blanks Results, Silo Exhaust Duct 6-14
Table 6.8 SW-846 Method 0010 PAHs Surrogate Recovery Results, Tunnel Exhaust Duct 6-15
Table 6.9 SW-846 Method 0010 Semi-Volatile Surrogate Recovery Results Tunnel Exhaust Duct 6-16
Table 6.10 SW-846 Method 0010 PAHs Surrogate Recovery Results, Silo Exhaust Duct 6-17
Table 6.11 SW-846 Method 0010 Semi-Volatile Surrogate Recovery Results Silo Exhaust Duct 6-18
Table 6.12 SW-846 Method 0030 Field and Laboratory Blanks Results Tunnel Exhaust Duct 6-19
Table 6.13 SW-846 Method 0030 Laboratory Blank Results, Silo Exhaust Duct 6-20
Table 6.14 SW-846 Method 0030 Surrogate Recovery Results Tunnel Exhaust Duct 6-21
Table 6.15 SW-846 Method 0030 Surrogate Recovery Results Silo Exhaust Duct 6-22

LIST OF FIGURES

Page

Figure 1.1 Project Organization - US EPA Hot Mix Asphalt Load-out Operation, Asphalt Plant C, California 1-6

Figure 2.1 Load-out Tunnel and MET Station Location and Average Wind Direction 2-85

Figure 3.1 Process Flow Schematic, Asphalt Plant C, California 3-2
Figure 3.2 Velocity Measurement Locations and Dimensions of Transport Trucks . . 3-12

Figure 4.1 Tunnel Exhaust Duct Sampling Locations, Asphalt Plant C, California 4-2
Figure 4.2 Tunnel Exhaust Duct Traverse Point Locations, Asphalt Plant C, California 4-3
Figure 4.3 Silo Exhaust Duct Sampling Locations, Asphalt Plant C, California 4-4
Figure 4.4 Silo Exhaust Duct Traverse Point Locations, Asphalt Plant C, California . . 4-5

Figure 5.1 EPA Method 315 Sampling Train Schematic 5-4
Figure 5.2 SW-846 Method 0030 Sampling Train Schematic 5-6
Figure 5.3 SW-846 Method 0010 Sampling Train Schematic 5-8
Figure 5.4 Location of TED Deposition Test Plates T_1, T_2, and T_3 5-11

GLOSSARY OF TERMS

ASTM – American Society for Testing and Materials
CEMS – Continuous Emissions Monitoring System
CTS – Calibration Transfer Standard
EMC – Emissions Measurement Center
EMAD – Emission Monitoring and Analysis Division
ESP – Electrostatic Precipitator
FID – Flame Ionization Detector
FTIR – Fourier Transform Infrared Spectroscopy
HAP – Hazardous Air Pollutant
MCEM – Methylene Chloride Extractable Matter
MRI – Midwest Research Institute
PES – Pacific Environmental Services
PM – Particulate Matter
PTE – Permanent Total Enclosure
RAP – Recycled Asphalt
RTFOT – Rolling Thin Film Oven Test
SED – Silo Exhaust Duct

GLOSSARY OF TERMS (CONTINUED)

SMTG – Source Measurement Technology Group
SVOHAP – Semi-Volatile Organic Hazardous Air Pollutant
TED – Tunnel Emissions Duct
TFOT – Thin Film Oven Test
THC – Total Hydrocarbons
VOHAP – Volatile Organic Hazardous Air Pollutant
VOST – Volatile Organic Sampling Train

1.0 INTRODUCTION

The United States Environmental Protection Agency (EPA) Office of Air Quality Planning and Standards (OAQPS) is investigating hot mix asphalt plants to identify and quantify particulate matter (PM), methylene chloride extractable matter (MCEM), and organic hazardous air pollutant (HAP) emissions during asphalt concrete loading operations. In support of this investigation, the OAQPS issued Pacific Environmental Services, Inc. (PES) Work Assignment Nos. 0-05 and 1-07 on EPA Contract No. 68-D7-002, Work Assignment Nos. 1-08, 2-07, 3-05, and 3-02 on EPA Contract 68D-98-004, and Work Assignment No. 2-16 on EPA Contract 68-D7-0069 to conduct emissions testing at a hot mix asphalt plant during load-out operations.

The primary objective of the emissions testing was to characterize the uncontrolled emissions of PM, MCEM, polynuclear aromatic hydrocarbons (PAHs), semi-volatile organic hazardous air pollutants (SVOHAPs), and volatile organic hazardous air pollutants (VOHAPs) from a hot mix asphalt production plant during loading operations. An asphalt plant located south of Los Angeles, CA, (referred to in this report as Asphalt Plant C or Plant C), was selected as the host facility. Testing was performed over five consecutive days beginning on July 24, 1998. Testing was performed under two conditions - normal operations and a background condition.

Under normal operations, testing was performed in the 32 inch (") inside diameter (ID) tunnel exhaust duct (TED) to characterize load-out emissions. Load-out in this report refers to the loading of hot mix asphalt concrete into a transport truck. Also under normal operations, testing was performed to characterize emissions from an asphalt concrete storage silo during load-in operations. Load-in in this report refers to the loading of asphalt concrete into a storage silo. To characterize load-in emissions, testing was performed in the 10" ID duct that is used to exhaust load-in fumes off Silo No. 2. This 10" ID duct is referred to in this report as the Silo Exhaust Duct (SED).

Under the background condition, testing was performed in the TED to characterize emissions from the combustion of diesel fuel in transport trucks. The background testing was performed in the TED on July 26, 1998 when Plant C was shut down. Two transport trucks were used to simulate normal load-out operations and spent four hours moving through the load-out tunnel using the same routine the trucks use when the plant is running and loading asphalt concrete.

Table 1.1 is a Test Log for the TED location and identifies the test run numbers, dates, sampling objectives, run times, and whether results are presented for the run. Table 1.2 is a Test Log listing all the test runs performed in the SED and has the same parameters as Table 1.1.

Note that results are not available for all the test runs performed. In some cases sampling problems, and in some cases, problems in the analysis were sufficient to invalidate the test run. These problems are discussed in Section 2.0 of this report.

Along with the testing, PES monitored and recorded ambient weather conditions, monitored and documented process operations, collected process samples, and measured the temperature of the asphalt concrete in the bed of randomly selected transport trucks as the trucks left the load-out tunnel. PES also took measurements to estimate the deposition of PM and MCEM on the inside walls of the TED, the inside walls of the exhaust plenum above Silo No. 2, the inside walls of the SED, and the ceiling of the load-out tunnel.

In addition, for a separate project, PES collected and analyzed a short series of grab samples from the Plant C dryer baghouse stack on July 25, 1998 using an on-site GC/MS. PES measured 6 VOHAPs in the baghouse stack at concentrations ranging from 10 to 330 parts per billion. These results are not load-out emissions and are not presented in the text of this report. These results are presented in Volume 3, Appendix C.4, beginning on page 146.

PES used six subcontractors for this effort: Advanced Asphalt Technologies, LP (AAT), Eastern Research Group (ERG), Enthalpy Analytical, Inc. (EAI), Quanterra Incorporated (QI), Triangle Laboratories, Inc. (TLI), Emission Monitoring, Inc. (EMI), and Atlantic Technical Services, Inc. (ATS). AAT provided analysis of the process samples. ERG provided analysis of the EPA Method 315 samples. EAI provided support for the EPA Method 18 sampling and analysis. TLI provided analysis of the SW-846 Method 0030 samples. QI provided analysis of the SW-846 Method 0010 samples. EMI provided the on-site Gas Chromatograph/Mass Spectrometry (GC/MS) data. ATS provided support services during the preparation of the Site Specific Test Plan (SSTP), the preparation of the Quality Assurance Project Plan (QAPP), and the preparation of the Draft Final Report.

The PES field test crew consisted of Frank Phoenix (Project Manager and Field Team Leader), Michael Maret, Dennis D. Holzschuh, Joe Rubio, Nick Nielsen, Troy Abernathy, Jairo Barreda, and Jessica Swift. The PES on-site QA coordinator was Dennis P. Holzschuh. Laura Kinner and Jim Peeler, of EMI, ran the on-site GC/MS instrumentation. Brian Purser, of EAI, provided support for the Method 18 sampling. On-site direction and overall coordination for the project was provided by Michael L. Toney, the EPA Emission Measurement Center Work Assignment Manager for WA 2-07, and Ron Myers with the EPA Emission Factor and Inventory Group. The test project organization and major lines of communication are presented in Figure 1.1. Note that Scott Klamm with Midwest Research Institute (MRI) is identified in Figure 1.1. MRI, under a separate EPA contract, was also on-site and performed testing simultaneous with PES for total hydrocarbons, selected organics, and measured the capture efficiency (CE) of the load-out tunnel. The results of the MRI tests appear in a separate report.

Including this introduction, this report consists of seven sections and seven appendices in eight volumes. Sections 1.0 through 7.0 and Appendix A are contained in Volume 1. Appendix B is contained in Volume 2. Appendices C, D, E, and F are contained in Volume 3, and Appendix G is contained in Volumes 4, 5, 6, 7, and 8. In Section 2.0, a summary of results

is presented. More detailed results appear in Appendix A. In Section 3.0, a brief description of the process is presented along with a summary of the process data collected and results of analyses of the process samples. More detailed process information is presented in Appendix B. In Section 4.0, descriptions of the sampling locations are presented. In Section 5.0, descriptions of the sampling and analytical procedures used during the test program are given. In Section 6.0, descriptions of the quality assurance/quality control (QA/QC) procedures used during the test program are discussed. Field data and meteorological data are in Appendix C. QA/QC data are presented in Appendix D. Copies of the test methods are presented in Appendix F. Detailed analytical results are presented in Appendix G.

TABLE 1.1

TEST LOG
TUNNEL EXHAUST DUCT
ASPHALT PLANT C - CALIFORNIA

Run Number[a]	Date	Sampling Objective	Run Time	Results Presented [b]
T-MM5-1	07/24/98	Semi-volatiles/PAHs	0720-1256	No
T-M18-1	07/24/98	Select Volatiles	0720-1256	Yes
T-M315-1	07/24/98	PM and MCEM	0720-1303	Yes
T-V-1-1	07/24/98	Volatiles	0829-0849	Yes
T-V-1-2	07/24/98	Volatiles	0910-0945	Yes
T-V-1-3	07/24/98	Volatiles	1058-1133	Yes
T-V-1-4	07/24/98	Volatiles	1219-1249	No
T-MM5-2	07/25/98	Semi-volatiles/PAHs	0710-1121	Yes
T-M18-2	07/25/98	Select Volatiles	0710-1126	Yes
T-M315-2	07/25/98	PM and MCEM	0711-1127	Yes
T-V-2-1	07/25/98	Volatiles	0802-0827	Yes
T-V-2-2	07/25/98	Volatiles	0859-0924	Yes
T-V-2-3	07/25/98	Volatiles	0951-1023	Yes
T-V-2-4	07/25/98	Volatiles	1102-1122	Yes
T-MM5-4	07/26/98	Semi-volatiles/PAHs	0925-1343	Yes
T-M18-4	07/26/98	Select Volatiles	0925-1346	Yes
T-M315-4	07/26/98	PM and MCEM	0926-1340	Yes
T-V-4-1	07/26/98	Volatiles	0925-0950	Yes
T-V-4-2	07/26/98	Volatiles	1025-1050	Yes
T-V-4-3	07/26/98	Volatiles	1152-1222	No
T-V-4-4	07/26/98	Volatiles	1255-1320	Yes
T-MM5-3	07/27/98	Semi-volatiles/PAHs	0710-1155	Yes
T-M18-3	07/27/98	Select Volatiles	0710-1155	Yes
T-M315-3	07/27/98	PM and MCEM	0711-1200	Yes
T-V-3-1	07/27/98	Volatiles	0917-0947	Yes
T-V-3-2	07/27/98	Volatiles	1009-1034	Yes
T-V-3-3	07/27/98	Volatiles	1053-1123	Yes

[a] Run Numbers are composed of the sampling location, sampling method, repetition number, and sample number. Where T = TED, MM5 = Modified Method 5 (SW-846 Method 0010), V = VOST (SW-846 Method 0030), M18 = EPA Method 18, M315 = EPA Method 315.
Example T-V-1-1 = VOST run 1, sample 1 at the TED.

[b] Refer to Section 2.0 for an explanation.

TABLE 1.2

TEST LOG
SILO EXHAUST DUCT
ASPHALT PLANT C - CALIFORNIA

Run Number [a]	Date	Sampling Objective	Run Time	Results Presented [b]
S-MM5-1	07/24/98	Semi-volatiles/PAHs	0720-1018	No
S-M18-1	07/24/98	Selected Volatiles	0920-1008	No
S-M315-1	07/24/98	PM and MCEM	1141-1243	Yes
S-V-1-1	07/24/98	Volatiles	0726-0736	Yes
S-V-1-2	07/24/98	Volatiles	0859-0909	Yes
S-V-1-3	07/24/98	Volatiles	0934-0944	No
S-V-1-4	07/24/98	Volatiles	1004-1014	Yes
S-MM5-2	07/25/98	Semi-volatiles/PAHs	0710-0950	Yes
S-M18-2	07/25/98	Selected Volatiles	0710-0954	No
S-M315-2	07/25/98	PM and MCEM	1015-1117	Yes
S-V-2-1	07/25/98	Volatiles	0710-0720	No
S-V-2-2	07/25/98	Volatiles	0746-0756	No
S-V-2-3	07/25/98	Volatiles	0849-0859	No
S-V-2-4	07/25/98	Volatiles	0910-0920	Yes
S-MM5-3	07/26/98	Semi-volatiles/PAHs	0804-1050	No
S-M18-3	07/26/98	Selected Volatiles	1023-1248	No
S-M315-3	07/26/98	PM and MCEM	1230-1257	No
S-V-3-1	07/26/98	Volatiles	0816-0821	No
S-V-3-2	07/26/98	Volatiles	0831-0836	No
S-V-3-3	07/26/98	Volatiles	0938-0943	Yes
S-V-3-4	07/26/98	Volatiles	0955-1002	No
S-V-3-5	07/26/98	Volatiles	1022-1029	No
S-V-3-6	07/26/98	Volatiles	1035-1042	No
S-M315-4	07/28/98	PM and MCEM	0649-0840	Yes
S-MM5-4	07/28/98	Semi-volatiles/PAHs	0913-1323	Yes
S-MM5-5	07/28/98	Semi-volatiles/PAHs	1358-1940	Yes

[a] Run Numbers are composed of the sampling location, sampling method, repetition number, and sample number. Where S = TED, MM5 = Modified Method 5 (SW-846 Method 0010), V = VOST (SW-846 Method 0030), M18 = EPA Method 18, and M315 = EPA Method 315.
Example S-V-1-1 = VOST run 1, sample 1 at the SED.

[b] Refer to Section 2.0 for an explanation.

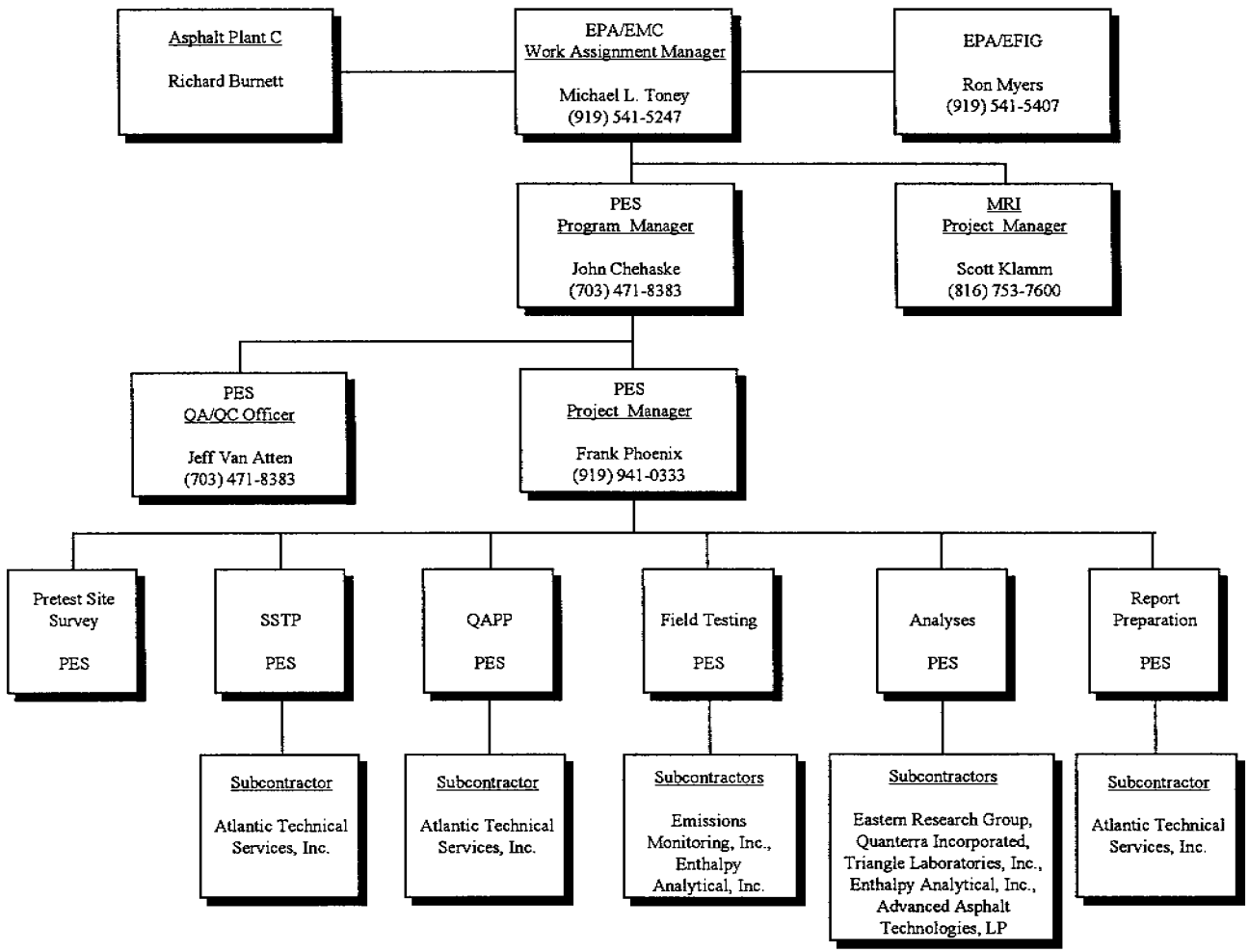

Figure 1.1 Project Organization - US EPA Hot Mix Asphalt Load-out Operation, Asphalt Plant C, California

2.0 SUMMARY OF TEST RESULTS

In this section, a summary of results are presented for the emissions testing performed at Asphalt Plant C in California. First an overview is presented in summary of results Tables 2.1 through 2.5. Next an extensive and detailed discussion of results is presented. The results of the TED test runs performed under normal operations are discussed first, beginning with the PM and MCEM results, and followed in order by the PAHs results, the SVOHAPs results, and the VOHAPs results. Next the results of the TED test runs performed under the background condition are discussed, followed in order by the results of the SED testing, the PM and MCEM deposition estimates, and the meteorological data. After the discussions, 30 summary tables are presented, beginning on page 2-16 with the TED normal operations tables, and followed in order by the TED background condition tables, the SED tables, the PM and MCEM deposition table, and the meteorological data table. For an index of tables, refer to the List of Tables beginning on page vii.

In this Summary of Results section, an extensive amount of data is presented. The vast majority of data met the quality objectives set at the beginning of the project, however, some problems were encountered. The most significant problems were encountered during analysis of the SED samples. At the SED, the relatively large concentration of non-target hydrocarbons interfered with the analysis of the target HAPs. As a result, some of the QA/QC criteria were not met, and some of the HAPs results are ± 100%. These problems are discussed in detail below.

2.1 OVERVIEW

The primary objective of the project was to characterize emissions from loading operations at a hot mix asphalt plant. Sampling and analysis were performed at two locations for PM, MCEM, and 156 organic HAPs, including 19 PAHs, 87 SVOHAPs, and 50 VOHAPs. Sampling was performed in the TED to characterize load-out emissions and in the SED to characterize load-in emissions. Load-out refers to the loading of hot mix asphalt concrete into a transport truck. Load-in refers to the loading of asphalt concrete into a storage silo. In this overview section, load-out and load-in are referred to jointly as "production".

The overall average TED and SED results for production emissions are summarized in Table 2.1. In Table 2.1 and in the rest of this overview section, TED emissions are also referred to as Truck Loading emissions and the SED emissions are referred to as Silo emissions. The results have been normalized to a pounds per ton basis (i.e., pounds of emissions per ton of asphalt concrete loaded) and can be used to estimate total loading emissions using plant loading

records or estimates. The Silo emissions are presented on an "as measured" basis. The Truck Loading emissions are presented on an "as measured" basis and on a "Capture Efficiency Corrected" basis. The adjustments for capture efficiency (CE) use the lower 90% confidence level CE values for each run. The lower 90% confidence level CE values were determined by MRI from tracer gas measurements conducted simultaneously with the TED testing. The calculations used to correct the TED results are presented in this report in Appendix A.5 beginning on page 211. Table 2.2 presents average production emissions for PM and MCEM. Table 2.3 presents average production emissions for individual PAH and SVOHAP compound. Table 2.4 presents average production emissions for individual VOHAP compounds. Table 2.5 presents average Silo emissions for individual PAH and VOHAP compounds.

2.2 TREATMENT OF NON-DETECTS AND ESTIMATES

Many of the compounds were never detected and the catch weight and results for these compounds were reported as non-detects (ND). Some compounds were detected in one or two test runs but not all three. In these cases, two formatting procedures were followed. First, NDs were reported for the non-detect compounds and the ND values were counted as zero in the test-run-average calculations. Second, the test run averages were enclosed in parentheses "( )" to indicate that they included at least one ND zero value. Some compounds were detected outside the calibration range of the method. In these cases, the catch weights and all the results were enclosed in braces "{ }" to identify the values as estimates. If one test run in the set was a ND and another test run in the set was an estimate, the ND formatting was chosen over the estimate formatting and the test-run-average results were enclosed in parentheses "( )".

2.3 TUNNEL EXHAUST DUCT

Sampling at the TED was performed over four consecutive days beginning on July 24, 1998. The first two days and fourth day of testing were performed under normal operations. The third day of testing was performed under the background condition. Simultaneous with the TED testing, MRI, under a separate EPA contract, measured the capture efficiency (CE) of the load-out tunnel. In a separate report, MRI reports 90% lower confidence level tunnel capture efficiencies of 64% for the testing on July 24, 1998, 65% for testing on July 25, 1998, 45% for testing on July 26, 1998, and 54% for testing on July 27, 1998. In Tables 2.1, 2.2, 2.3, and 2.4, TED emissions are presented "as measured" and "corrected for the capture efficiency". In Tables 2.5 through 2.33, TED emissions are presented "as measured" only.

TABLE 2.1
SUMMARY OF RESULTS
PRODUCTION EMISSIONS FOR PM, MCEM, PAH, SVOHAP, and VOHAP
ASPHALT PLANT C, CALIFORNIA - JULY 1998

	As Measured [1]		Capture Efficiency Corrected [2]
	Silo	Truck Loading [3]	Truck Loading [3]
Test Parameter [6, 7, 8]	Production [4] lb/ton [5]	Production lb/ton	Production lb/ton
PM - Method 315	3.95E-04	1.70E-04	2.75E-04
PM - Deposition Estimate [9]	7.12E-05	1.06E-04	1.34E-04
PM - Total	4.66E-04	2.76E-04	4.09E-04
MCEM - Method 315	1.34E-04	9.59E-05	1.53E-04
MCEM - Deposition Estimate [9]	1.12E-06	7.73E-06	8.68E-06
MCEM - Total	1.35E-04	1.04E-04	1.62E-04
Total PAHs	9.69E-06	2.01E-06	3.12E-06
Total SVOHAPs	NP	3.55E-07	5.82E-07
Total VOHAPs	3.49E-05	2.21E-05	3.65E-05

[1] The As Measured data is taken from Tables 2.2, 2.3, 2.4, and 2.34; Silo emissions were measured in the SED, Truck Loading emissions were measured in the TED.

[2] 90% lower confidence level CE corrections are based on run by run CE tests performed by MRI; see Appendix A.5, pages 211 and 212 for the calculations.

[3] Truck Loading emissions include background emissions from truck operations. See Table 2-2.

[4] Production in this table represents Normal Operation.

[5] Pounds per ton of asphalt loaded.

[6] PM represents Particulate Matter, MCEM represents Methylene Chloride Extractable Matter.

[7] MCEM is a component of PM (i.e., the methylene chloride extractable portion of PM) and it is not appropriate to add the PM and MCEM together.

[8] PAH represents Polynuclear Aromatic Hydrocarbons; SVOHAP, Semi-Volatile Organic Hazardous Air Pollutants; VOHAP, Volatile Organic Hazardous Air Pollutants.

[9] Data taken from Table 2.34, see also Appendix A.4, pages 206 through 209.

TABLE 2.2
SUMMARY OF RESULTS
AVERAGE PM AND MCEM EMISSIONS
ASPHALT PLANT C, CALIFORNIA - JULY 1998

	As Measured [1]					Capture Efficiency Corrected [2]		
	Silo		Truck Loading			Truck Loading		
	Production [3]		Production		Background [4]	Production		Background
	gr/dscf [5]	lb/ton [6]	gr/dscf	lb/ton	gr/dscf	gr/dscf	lb/ton	gr/dscf
PM [7]	3.63E-02	3.95E-04	9.42E-04	1.70E-04	7.93E-04	1.55E-03	2.75E-04	1.76E-03
MCEM [7, 8]	1.19E-02	1.34E-04	5.25E-04	9.59E-05	3.78E-04	8.44E-04	1.53E-04	8.40E-04

[1] The As Measured data is taken from Tables 2.7, 2.17 and 2.27; Silo emissions were measured in the SED, Truck Loading emissions were measured in the TED.

[2] 90% lower confidence level CE corrections are based on run by run CE tests performed by MRI; see Appendix A.5, pages 211 and 212 for the calculations.

[3] Production in this table represents Normal Operation.

[4] The Background test was performed while no asphalt was loaded and represents emissions from diesel trucks only.

[5] Grains per dry standard cubic foot.

[6] Pounds per ton of asphalt loaded.

[7] PM represents Particulate Matter, MCEM represents Methylene Chloride Extractable Matter.

[8] MCEM is a component of PM (i.e., the methylene chloride extractable portion of PM) and it is not appropriate to add the PM and MCEM together.

TABLE 2.3
SUMMARY OF RESULTS
AVERAGE PAH AND SVOHAP EMISSIONS
ASPHALT PLANT C, CALIFORNIA - JULY 1998

	As Measured [1]					Capture Efficiency Corrected [2]		
	Silo		Truck Loading			Truck Loading		
	Production [3]		Production		Background [3]	Production		Background
	ppbvd [4]	lb/ton [4]	ppbvd	lb/ton	ppbvd	ppbvd	lb/ton	ppbvd
PAH [5, 6, 7]								
Acenaphthene	1.80E+01	3.80E-07	1.70E-01	8.47E-08	1.79E-02	2.64E-01	1.31E-07	3.97E-02
Acenaphthylene	4.38E-01	9.04E-09	1.90E-02	9.30E-09	2.60E-03	2.94E-02	1.44E-08	5.78E-03
Anthracene	4.54E+00	1.10E-07	4.35E-02	2.67E-08	6.19E-03	6.76E-02	4.15E-08	1.38E-02
Benzo(a)anthracene	1.50E+00	4.33E-08	8.23E-03	6.28E-09	3.29E-04	1.28E-02	9.77E-09	7.32E-04
Benzo(b)fluoranthene	ND	ND	3.18E-03	2.69E-09	3.58E-04	4.93E-03	4.18E-09	7.95E-04
Benzo(k)fluoranthene	ND	ND	8.88E-04	7.62E-10	ND	1.38E-03	1.19E-09	ND
Benzo(g,h,i)perylene	ND	ND	7.71E-04	7.21E-10	1.36E-04	1.20E-03	1.12E-09	3.02E-04
Benzo(a)pyrene	ND	ND	9.10E-04	7.80E-10	ND	1.41E-03	1.21E-09	ND
Benzo(e)pyrene	1.82E-01	6.17E-09	3.29E-03	2.85E-09	2.58E-04	5.11E-03	4.43E-09	5.74E-04
Chrysene	5.60E+00	1.62E-07	4.84E-02	3.66E-08	6.81E-03	7.51E-02	5.69E-08	1.51E-02
Dibenz(a,h)anthracene	ND	ND	1.61E-04	1.82E-10	ND	2.51E-04	2.84E-10	ND
Fluoranthene	4.38E+00	1.16E-07	2.91E-02	1.99E-08	7.44E-03	4.52E-02	3.09E-08	1.65E-02
Fluorene	3.60E+01	8.89E-07	5.14E-01	3.04E-07	4.83E-02	7.99E-01	4.74E-07	1.07E-01
Indeno(1,2,3-cd)pyrene	ND	ND	1.92E-04	2.27E-10	ND	3.01E-04	3.55E-10	ND
2-Methylnaphthalene	2.22E+02	4.52E-06	1.65E+00	7.47E-07	9.17E-02	2.55E+00	1.16E-06	2.04E-01
Naphthalene	8.52E+01	1.50E-06	9.25E-01	3.77E-07	ND	1.43E+00	5.85E-07	ND
Perylene	6.19E-01	2.77E-08	8.90E-03	7.90E-09	ND	1.38E-02	1.23E-08	ND
Phenanthrene	6.01E+01	1.55E-06	5.28E-01	3.26E-07	1.13E-01	8.21E-01	5.07E-07	2.50E-01
Pyrene	1.32E+01	3.78E-07	8.06E-02	5.45E-08	1.49E-02	1.25E-01	8.47E-08	3.31E-02
Total PAH's	--	9.69E-06	--	2.01E-06	--	--	3.12E-06	--
SVOHAPs [5, 6, 7, 8]	NP	NP						
Phenol			1.54E+00	3.55E-07	ND	2.52E+00	5.82E-07	ND
Total PAH + SVOHAP	--	9.69E-06	--	2.36E-06	--	--	3.70E-06	--

[1] The As Measured data is taken from Tables 2.9, 2.10, 2.19, 2.20 and 2.29; Silo emissions were measured in the SED, Truck Loading emissions were measured in the TED.

[2] 90% lower confidence level CE corrections are based on run by run CE tests performed by MRI; see Appendix A.5, pages 211 and 212 for the calculations.

[3] Production represents Normal Operations, the Background test was performed while no asphalt was loaded and represents emissions from diesel trucks only.

[4] ppbvd represents parts per billion by volume dry, lb/ton represents pounds per ton of asphalt loaded.

[5] PAH represents polynuclear aromatic hydrocarbons; SVOHAP represents semi-volatile organic hazardous air pollutants.

[6] The formatting procedures discussed in Section 2.2 using parentheses and braces were not followed here.

[7] ND Non Detects - Results were below analyte detection limit.

[8] NP Not Presented - The four detected SVOHAP compounds in Table 2.30 are already presented as PAH compounds and are not presented again here.

TABLE 2.4
SUMMARY OF RESULTS
AVERAGE VOHAP EMISSIONS
ASPHALT PLANT C, CALIFORNIA - JULY 1998

	As Measured [1]					Capture Efficiency Corrected [2]		
	Silo		Truck Loading			Truck Loading		
	Production [3]		Production		Background [3]	Production		Background
	ppbvd [4]	lb/ton [4]	ppbvd	lb/ton	ppbvd	ppbvd	lb/ton	ppbvd
VOHAPS [5, 6, 7]								
Acetone	3.54E+02	2.87E-06	4.57E+00	9.65E-07	2.00E+00	7.23E+00	1.52E-06	4.43E+00
Benzene [8]	1.60E+02	1.81E-06	2.65E+00	7.76E-07	5.34E-01	4.18E+00	1.22E-06	1.19E+00
Bromomethane	1.71E+01	2.98E-07	5.06E-01	1.72E-07	9.15E-02	7.90E-01	2.69E-07	2.03E-01
2-Butanone	2.10E+02	1.81E-06	2.60E+00	6.97E-07	2.67E-01	4.12E+00	1.10E-06	ND
Carbon Disulfide	6.73E+01	8.94E-07	5.30E-01	1.57E-07	ND	8.45E-01	2.48E-07	ND
Chloroethane	1.56E+01	2.52E-07	1.64E-02	3.59E-09	ND	2.57E-02	5.61E-09	ND
Chloroform	ND	ND	ND	ND	1.90E-02	ND	ND	4.22E-02
Chloromethane	1.47E+02	1.37E-06	1.35E+00	2.45E-07	3.74E-01	2.15E+00	3.88E-07	8.31E-01
Cumene [8]	ND	ND	3.95E+00	1.75E-06	ND	9.21E+00	4.08E-06	ND
Ethylbenzene [8]	1.54E+02	2.01E-06	1.46E+01	5.53E-06	7.80E+00	2.32E+01	8.73E-06	1.73E+01
Hexane [8]	4.81E+02	6.09E-06	6.70E+00	2.18E-06	1.95E-01	1.04E+01	3.39E-06	4.33E-01
Isooctane	1.05E+00	2.45E-08	8.60E-02	4.03E-08	1.06E-01	1.37E-01	6.34E-08	2.35E-01
Methylene Chloride	8.61E-01	1.78E-08	4.41E+00	1.20E-06	1.21E+01	7.50E+00	2.01E-06	2.68E+01
MTBE	no data	no data	2.73E-01	8.78E-08	7.07E-01	4.51E-01	1.42E-07	1.57E+00
Styrene	2.16E+01	2.32E-07	2.29E-01	8.13E-08	1.45E-01	3.92E-01	1.36E-07	3.22E-01
Tetrachloroethene	ND	ND	2.05E-01	1.20E-07	8.65E-02	3.34E-01	1.94E-07	1.92E-01
Toluene [8]	2.82E+02	3.42E-06	1.15E+01	3.73E-06	5.90E+00	1.85E+01	5.94E-06	1.31E+01
1,1,1-Trichloroethane	ND	ND	ND	ND	3.40E-02	ND	ND	7.55E-02
Trichloroethene	ND	ND	ND	ND	2.87E-03	ND	ND	6.39E-03
Trichlorofluoromethane	ND	ND	6.96E-02	3.30E-08	7.42E-02	1.16E-01	5.41E-08	1.65E-01
m-/p-Xylene [8]	7.84E+02	1.06E-05	7.03E+00	2.70E-06	1.36E-01	1.10E+01	4.22E-06	3.03E-01
o-Xylene [8]	2.26E+02	3.18E-06	3.05E+00	1.16E-06	8.71E-02	4.81E+00	1.83E-06	1.94E-01
Total VOHAP's	--	3.49E-05	--	2.21E-05	--	--	3.65E-05	--

[1] The As Measured data is taken from Tables 2.12, 2.22, 2.32 and Appendix A.5, page 212; Silo emissions were measured in the SED, Truck Loading emissions were measured in the TED.

[2] 90% lower confidence level CE corrections are based on run by run CE tests performed by MRI; see Appendix A.5, pages 211 and 212 for the calculations.

[3] Production represents Normal Operations, the Background test was performed while no asphalt was loaded and represents emissions from diesel trucks only.

[4] ppbvd represents parts per billion by volume dry, lb/ton represents pounds per ton of asphalt loaded.

[5] VOHAPs represents volatile organic hazardous air pollutants.

[6] The formatting procedures discussed in Section 2.2 using parentheses and braces were not followed here.

[7] ND Non Detects - Results were below analyte detection limit.

[8] For Truck Loading, data represents the average of the Method 0030 and the Method 18 test runs calculated in Appendix A.5, page 212.

TABLE 2.5

SUMMARY OF RESULTS
PAHS, SVOHAPS, & VOHAPS AVERAGE EMISSIONS
SILO EXHAUST DUCT - ASPHALT PLANT C, CALIFORNIA
JULY 1998

	Normal Operations [1]	
	ppbvd [2]	lb/ton [3]
PAH		
Acenaphthene	1.80E+01	3.80E-07
Acenaphthylene	4.38E-01	9.04E-09
Anthracene	4.54E+00	1.10E-07
Benzo(a)anthracene	1.50E+00	4.33E-08
Benzo(e)pyrene	1.82E-01	6.17E-09
Chrysene	5.60E+00	1.62E-07
Fluoranthene	4.38E+00	1.16E-07
Fluorene	3.60E+01	8.89E-07
2-Methylnaphthalene	2.22E+02	4.52E-06
Naphthalene	8.52E+01	1.50E-06
Perylene	6.19E-01	2.77E-08
Phenanthrene	6.01E+01	1.55E-06
Pyrene	1.32E+01	3.78E-07
Total PAH	--	9.69E-06
SVOHAP	NP [4]	NP
Total PAH + SVOHAP	--	9.69E-06

	Normal Operations [1]	
	ppbvd [2]	lb/ton [3]
VOHAPS		
Acetone	3.54E+02	2.87E-06
Benzene	1.60E+02	1.81E-06
Bromomethane	1.71E+01	2.98E-07
2-Butanone	2.10E+02	1.81E-06
Carbon Disulfide	6.73E+01	8.94E-07
Chloroethane	1.56E+01	2.52E-07
Chloromethane	1.47E+02	1.37E-06
Ethylbenzene	1.54E+02	2.01E-06
n-Hexane	4.81E+02	6.09E-06
Isooctane	1.05E+00	2.45E-08
Methylene Chloride	8.61E-01	1.78E-08
Styrene	2.16E+01	2.32E-07
Toluene	2.82E+02	3.42E-06
m-/p-Xylene	7.84E+02	1.06E-05
o-Xylene	2.26E+02	3.18E-06
Total VOHAPS	--	3.49E-05

1 The formatting procedures discussed in Section 2.2 using parentheses and braces were not followed here.
2 Parts per billion by volume, dry.
3 Pounds per ton of asphalt loaded in.
4 NP Not Presented - The four detected SVOHAP are already presented as PAH and are not presented again here.

2.3.1 Tunnel Exhaust Duct Results - Normal Operations

Normal operations in this report refers to the routine loading of asphalt concrete into transport trucks (often referred to in this report as "load-out"). Under normal operations, testing in the TED was conducted only during load-out. When load-out stopped, the testing stopped. Refer to Section 3.0 for more information on the coordination between testing and load-out operations. In the tables that follow, target compound concentrations are presented in grains per dry standard cubic feet (gr/dscf) or parts per billion by volume dry (ppbvd) and emissions are presented in pounds per ton (lb/ton) of asphalt concrete loaded. Pounds per ton emissions were calculated by dividing the emissions in pounds per test period by the tons of asphalt concrete loaded into transport trucks during the test period. Pounds per test period emissions were calculated by multiplying the target compound concentration by the TED exhaust gas flow rate and by the test time. The data are presented "as measured" and are not corrected for background or capture efficiency. Detailed results of the PM, MCEM, PAHs, SVOHAPs, VOHAPs, are presented in Volume 1, Appendix A. Example calculations are presented in Volume 1, Appendix A.3, beginning on page 195.

2.3.1.1 PM and MCEM Results - Normal Operations

In Table 2.6, emissions sampling and exhaust gas parameters are presented for the PM and MCEM tests performed under normal operations. In Table 2.7, exhaust gas concentrations and emissions are presented for the PM and MCEM tests performed under normal operations.

2.3.1.2 PAHs and SVOHAPs Results - Normal Operations

In Table 2.8, emissions sampling and exhaust gas parameters are presented for the PAHs and SVOHAPs test runs performed under normal operations. A single SW-846 Method 0010 Modified Method 5 (MM5) sampling train was used to collect both PAHs and SVOHAPs. Note that PAHs are SVOHAPs, but for clarity are referred to separately in this report. Also note that some of the SVOHAPs and some of the VOHAPs presented is this report are not listed in the CAA as HAPs. The results from T-MM5-1 are not presented. The sample from test run T-MM5-1 was mistakenly separated from the other samples, discarded, and never analyzed. As a result, this report presents two sets of PAHs and SVOHAPs data from the TED instead of three. The average absolute difference between test runs T-MM5-2 and T-MM5-3 is 0.065 ppbvd. This indicates good precision and data quality for the two runs presented.

In Table 2.9, exhaust gas concentrations and emissions are presented for all 19 PAHs. At 1.65 ppbvd, 2-methylnaphthalene ranked the highest. Nine of the 19 PAHs were found at levels above the method calibration range but were still within the linear response range of the detector. The results for these nine PAHs were enclosed in braces "{ }" identifying them as estimates. In Table 2.10, exhaust gas concentrations and emissions are presented for three of the 87 target SVOHAPs; 84 target SVOHAPs were not detected. At 2.60 ppbvd, 2-methylnaphthalene ranked the highest. Note that 2-methylnaphthalene, naphthalene, and pyrene were analyzed as PAHs and as SVOHAPs and appear in both Table 2.9 and Table 2.10. Also note that the results of the two analyses for each of the three compounds were essentially the same.

2.3.1.3 VOHAPs Results - Normal Operations

Three different procedures were used to measure VOHAPs: 1) sampling procedure SW 846 Method 0030 in combination with analytical procedure SW 846 Method 8260 (often referred to in this report as VOST), 2) Method 18, and 3) on-site GC/MS. The VOST results are presented first, followed in order by the Method 18 and on-site GC/MS results.

2.3.1.3.1 VOST VOHAPs Results - Normal Operations. The Volatile Organic Sampling Train (VOST) of SW-846 Method 0030 was used to collect VOHAPs. The analytical procedures of SW-846 Method 8260 were used to analyze for VOHAPs. Each VOST test run, with the exception of T-V-3, consisted of four samples (three as required by the method, and a fourth as a back-up sample) collected over the four-hour test period. For T-V-3 a fourth back-up sample was not collected. In Table 2.11, emissions sampling and exhaust gas parameters for the VOST test runs are presented. In Table 2.12, exhaust gas concentrations and emissions are presented for "VOST" VOHAPS. Test run T-V-1 represents the sum of three samples, T-V-1-1, T-V-1-2, and T-V-1-3 (T-V-1-4 was lost during analysis). Test run T-V-2 represents the sum of four samples, T-V-2-1, T-V-2-2, T-V-2-3, and backup sample T-V-2-4. Test run T-V-3 represents the sum of three samples T-V-3-1, T-V-3-2, and T-V-3-3. A total of 10 samples were analyzed for 50 target VOHAPs. Eighteen VOHAPs were detected; m-/p-xylene ranked the highest at 5.18 ppbvd.

Note that most of the results presented in Table 2.12 are enclosed in either braces "{ }" or parentheses "( )". The braces indicate that at least one of the samples in the test run was below the lower quantification limit of SW-846 Method 8260 of 0.05 μg/sample, and identifies the sum presented as containing an estimate. The parentheses indicate that at least one of the samples in the test run was a ND identifying the sum presented as containing a zero.

Note also that the samples were not analyzed within the 14 day analysis window in the method. The laboratory started with the SED samples and after encountering severe matrix problems (see Section 2.4 for details), delayed analyzing all remaining Plant C samples until August 9, 1998. The first set of TED samples were analyzed on August 9, 1998, three days outside the 14 day window. The last set of TED samples were analyzed on August 24, 1998, 17 days outside the 14 day window. As a result, even though the samples were sealed and stored in a freezer, it is possible that some portion of the most volatile compounds was lost before analysis.

2.3.1.3.2 Method 18 VOHAPs Results - Normal Operations. In addition to VOST, Method 18 was used in a backup capacity to collect and analyze eight VOHAPs. The eight "Method 18" VOHAPs were expected to be above the upper quantification limit of SW-846 Method 8260 of 1.0 μg/sample (as it turned out, the eight "Method 18" VOHAPs were detected using SW-846 Method 8260 at levels well below 1.0 μg/sample). In Table 2.13, the emissions sampling parameters and exhaust gas parameters for the Method 18 test runs are presented. In Table 2.14, exhaust gas concentrations and emissions are presented for the "Method 18" VOHAPs. Note that for five of the eight "Method 18" VOHAPs, the Method 18 results were

higher than the VOST results. Also note that the concentrations of the "Method 18" VOHAPs were lower than expected, are close to the lower detection limits of Method 18, and therefore are less reliable than the VOST results.

2.3.1.3.3 GC/MS VOHAPs Results - Normal Operations. A portable, direct interface GC/MS system was used as an on-site screening tool for the measurement of selected VOHAPs. The GC/MS system used a grab sample technique where the effluent sample was co-mixed with the internal standard mixture in the GC sampling loop before injection into the GC/MS. The sample conditioning system consisted of an unheated stainless steel probe, a 0.3 micron quartz filter, a Teflon®-heated diaphragm pump, and Teflon® tubing connected to the GC/MS. Under normal operations, 16 separate samples were collected and analyzed with the GC/MS system on July 23, 24, and 25, 1998, as discussed below.

1. On July 23, 1998, three samples were collected at the exit end of the load-out tunnel through the sampling system and conveyed to the GC/MS. No compounds were detected in these samples.

2. One July 23, 1998, one sample was collected upwind of the load-out tunnel through the sampling system and conveyed to the GC/MS. No compounds were detected in this sample.

3. On July 24, 1998, seven samples were collected from the TED through the sampling system and conveyed to the GC/MS. Results from the last three samples are presented in Table 2.15.

4. On July 24, 1998, four samples were collected from the TED through the sampling system and conveyed to a Tedlar® bag and then to the GC/MS. Results of these samples are presented in Table 2.15.

5. On July 25, 1998, one sample was collected from directly above a transport truck inside the load-out tunnel during load-out. This sample was collected through the sampling system and conveyed to a Tedlar® bag and then to the GC/MS. The results of this sample are presented in Table 2.15.

In Table 2.15, the results of the "GC/MS" VOHAPs testing are presented. For comparison, selected "VOST" and "Method 18" VOHAPs are also presented. A detailed presentation of the "GC/MS" VOHAPs testing is presented in Volume 3, Appendix C.4, beginning on page 118.

2.3.2 Tunnel Exhaust Duct Results - Background Condition

The background condition testing was performed to characterize emissions from the combustion of diesel fuel in the transport trucks. The background testing was performed in the TED on Sunday, July 26, 1998, when the plant was shut down. Two transport trucks were used

to simulate normal load-out operations and spent four hours sequentially entering, stopping, sitting, and exiting the load-out tunnel. In the tables that follow, target compound concentrations are presented in gr/dscf or ppbvd, and emissions are presented in pounds per hour (lb/hr). Pounds per hour emissions were calculated by multiplying the target compound concentration by the TED exhaust gas flow rate.

2.3.2.1 PM and MCEM Results - Background Condition

In Table 2.16, emissions sampling and exhaust gas parameters are presented for the PM and MCEM tests performed under the background condition. In Table 2.17, exhaust gas concentrations and emissions are presented for the PM and MCEM tests performed under the background condition.

2.3.2.2 PAHs and SVOHAPs Results - Background Condition

In Table 2.18, emissions sampling and exhaust gas parameters are presented for the PAHs and SVOHAPs test runs performed under the background condition. In Table 2.19, exhaust gas concentrations and emissions are presented for 13 of the 19 PAHs; six of the PAHs were ND. At 0.113 ppbvd, phenanthrene ranked the highest. Note that during normal operations, phenanthrene averaged 0.528 ppbvd. In Table 2.20, the exhaust gas concentrations and emissions for all 87 target SVOHAP compounds are reported as NDs.

2.3.2.3 VOHAPs Results - Background Condition

In Table 2.21, emissions sampling and exhaust gas parameters are presented for the VOST test runs performed under the background condition. In Table 2.22, exhaust gas concentrations and emissions are presented for "VOST" VOHAPs. Results are presented for three samples for test run T-V-4: T-V-4-1, T-V-4-2, and T-V-4-4 (T-V-4-3 was lost during analysis). Nineteen of the 50 VOHAPs were detected. Methylene chloride ranked the highest at 12.1 ppbvd. This background concentration appears high (during normal operations, methylene chloride averaged 4.41 ppbvd) and may be the result of field contamination. Note first that methylene chloride was used as a clean-up solvent in the field, and second that methylene chloride was found in significant quantities in the TED VOST field blank (see Table 6.12 in Section 6.0).

Note that for samples T-V-4-1, T-V-4-2, and T-V-4-4, unlike the normal operations samples, the Tenax® and Tenax®/charcoal tubes were desorbed and analyzed separately. This was done as a precaution against the matrix interferences encountered analyzing the SED samples. As it turned out, matrix interferences were not a problem at the TED, and the remaining TED Tenax® and Tenax®/charcoal tube combinations were analyzed together.

Method 18 was used in a backup capacity during the background condition. In Table 2.23, emissions sampling and exhaust gas parameters are presented for the eight "Method 18" VOHAPs. In Table 2.24, exhaust gas concentrations and emissions are presented for the eight "Method 18" VOHAPs.

2.4 SILO EXHAUST DUCT RESULTS

Sampling at the SED was performed over five days beginning on Friday, July 24, 1998. Testing was not performed at the SED on Sunday, July 26, 1998 when the plant was shut down. All the testing at the SED was performed under normal operations. Normal operations at the SED refers to the routine production and loading of asphalt concrete into Silo No. 2 (also referred to in this report as "load-in").

In Table 2.25, a sample log is presented identifying the 27 test runs performed at the SED. Results are presented in this section for 11 of the 27 test runs performed. Results are not presented for 16 of the test runs for the reasons discussed below. Two major problems were encountered during the testing in the SED. First, the exhaust gas moisture content in the SED varied significantly (from 15% to 70%) as the moisture content in the reclaimed asphalt changed. As a result, the sampling rates on three runs (S-MM5-1B, S-MM5-3, and S-M315-3) were over-isokinetic and replacement runs (S-MM5-4, S-MM5-5, and S-M315-4) were performed. Second, the total hydrocarbon concentrations in the SED were much higher than expected, creating extensive matrix interference problems during analysis. As a result, it was necessary to modify the PAHs, SVOHAPs, and VOHAPs analytical procedures. For the PAHs and SVOHAPs analyses, the samples were diluted and re-analyzed. For the VOHAPs, since dilution was not an option, only selected samples were analyzed. Because of these matrix problems, the PAHs, SVOHAPs, and VOHAPs results presented are qualitative, and only identify the compounds and approximate the concentrations present. More detailed explanations of these problems are presented below.

In the summary of results tables that follow, target compound concentrations are presented in gr/dscf or ppbvd and emissions are presented in lb/tons of asphalt concrete loaded. Pounds per ton emissions were calculated by dividing the emissions in pounds per test period by the tons of asphalt concrete loaded into Silo No. 2 during the test period. Pounds per test period emissions were calculated by multiplying the target compound concentration first by the SED exhaust flow rate and second by the test time. Detailed results are presented in Volume 1, Appendix A.2, beginning on page 102.

2.4.1 Silo Exhaust Duct - PM and MCEM Results

In Table 2.26, emissions sampling and exhaust gas parameters are presented for the PM and MCEM test runs performed at the SED. In Table 2.27, exhaust gas concentrations and emissions are presented for the PM and MCEM tests performed at the SED. Note that test run S-315-3 is not presented. The sampling rate for test run S-315-3 was over-isokinetic and a replacement run (S-315-4) was performed.

2.4.2 Silo Exhaust Duct - PAHs and SVOHAPs Results

In Table 2.28, emissions sampling and exhaust gas parameters are presented for the PAHs and SVOHAPs test runs performed at the SED. A single SW-846 Method 0010 Modified Method 5 (MM5) sampling train was used to collect both PAHs and SVOHAPs. Note that

(S-MM5-1B) was performed. The sampling rates for test runs S-MM5-1B and S-MM5-3 were over-isokinetic and replacement runs (S-MM5-4 and S-MM5-5) were performed. In Table 2.29, exhaust gas concentrations and emissions are presented for 13 of the 19 PAHs; 6 of the PAHs were not detected. In Table 2.30, exhaust gas concentrations and emissions are presented for 4 of the 87 target SVOHAPs; 83 of the SVOHAPs were not detected.

The PAH analyses, using California Air Resources Board (CARB) Method 429 were, as the QI case narrative indicates, "significantly compromised by extensive matrix interferences, including retention-time shifts and co-eluding interferences, and saturated analyte levels." As a result, no usable data was obtained from the initial analyses. After the initial analyses, however, aliquots of the SED sample extracts were diluted and re-analyzed. These dilutions minimized the matrix interferences but also pushed the internal standards (introduced before extraction) below the instrument detection limits. After dilution, QI introduced new internal standards at normal levels for calculating the target analyte levels. Without the original internal standards, the opportunity to perform recovery corrections, and the opportunity to measure the efficiency of sample extraction and clean-up were lost. The QI case narrative indicates that the net result is a potential low bias in the reported concentrations.

Like the PAHs analysis, the initial SVOHAPs analyses (using SW-846 Method 8270) encountered severe matrix interferences that required dilutions. In these cases, the Method 8270 detection limits were approximately 200 times higher than the CARB 429 detection limits; therefore, all but four target compounds were pushed below the detection limits. One compound (2-methylnaphthalene) was detected above the quantification limit and three compounds (fluorene, naphthalene, and phenanthrene) were detected below the quantification limit but above the detection limit. The remaining 83 target SVOHAPs and the internal standards spiked at the time of extraction were not detected. In an effort to help characterize the non-target hydrocarbons causing the matrix interferences, the highest 20 chromatogram peaks were semi-quantified using the NIST 44,000 compound library. These data are presented as tentatively identified compounds (TICs) in Volume 1, Appendix A.2, beginning on page 133.

2.4.3 Silo Exhaust Duct - VOHAPs Results

Three different procedures were used to measure VOHAPs in the SED: VOST, Method 18, and on-site GC/MS. The VOST results are presented first, followed in order by the Method 18 and the on-site GC/MS results.

2.4.3.1 Silo Exhaust Duct - VOHAPs Results, VOST

In Table 2.31, emissions sampling and exhaust gas parameters are presented for the VOST test runs performed at the SED. In Table 2.32, exhaust gas concentrations and emissions are presented for the "VOST" VOHAPs. In Table 2.32, test run S-V-1 represents the sum of three samples; test run S-V-2 represents one sample; and S-V-3 represents one sample.

Matrix problems, similar to those encountered during the PAHs and SVOHAPs analyses were encountered during the "VOST" VOHAPs analyses. For the first set of analyses, the Tenax® and Tenax® charcoal tubes were analyzed together. The non-target hydrocarbons in the

Matrix problems, similar to those encountered during the PAHs and SVOHAPs analyses were encountered during the "VOST" VOHAPs analyses. For the first set of analyses, the Tenax® and Tenax® charcoal tubes were analyzed together. The non-target hydrocarbons in the samples overwhelmed and shut down the analyzer, and no usable data was obtained. Unlike the PAHs and SVOHAPs, the volatile samples could not be diluted and re-analyzed (i.e., in Method 8260, the sample is thermal desorbed and immediately injected into the analyzer). It became clear that a quantitative analysis that met all the QA/QC criteria of VOST was unlikely. A decision was made to analyze selected samples and establish a qualitative understanding of the VOHAPs present.

Five samples were chosen: three samples from the first test run (S-V-1-1, S-V-1-2, and S-V-1-4), one from the second test run (S-V-2-4), and one from the third test run (S-V-3-3). This time the Tenax® and Tenax® charcoal tubes were analyzed separately (note that the data from Tenax®-charcoal tube from S-V-1-1 was lost in analysis). This generated 450 data points. Three hundred and fifty-three (353) of the 450 data points were ND. Twenty-eight data points were found at levels above the upper quantification limit of 1.0 μg/sample; 36 were found between the lower quantification limit of 0.1 μg/sample and the detection limit of 0.001 μg/sample; 24 were found within the upper and lower limits; and no data was available for 9 data points (a calibration standard was not available for methylene chloride). Results of the 28 VOHAPs above the quantification limit and the 36 VOHAPs below the quantification limit are enclosed in braces "{ }" identifying them as estimates. As a worst case, these estimates are ± 100 % and serve to identify the VOHAPs present and approximate the concentrations.

Note also that the samples were analyzed 26 days outside the 14 day analytical window in the method. As a result, even though the samples were sealed and stored in a freezer, it is possible that some portion of the most volatile compounds was lost before analysis.

2.4.3.2 Silo Exhaust Duct - VOHAPs Results, Method 18

Method 18 was used in a backup capacity to collect and analyze eight VOHAPs. Matrix problems were encountered here as well. EAI's case narrative states, "The large number of peaks made quantification impossible. There were literally hundreds of peaks. The FID was unable to differentiate the target peaks from the crowd. There is a significant possibility that the concentrations presented include extraneous peaks that co-eluded with the target peaks." Given these problems, it was decided not to present the Method 18 results. Instead, in an effort to better understand the makeup of the non-target hydrocarbons, the Method 18 extracts were qualitatively characterized using the analytical procedures of SW-846-Method 8260. The highest 30 peaks were given the best tentative identification using the NIST 44,000 compound library. The peaks were semi-quantified using the internal standard 4-bromofluorobenzene and a response factor of 1.00. Some of the compounds appear more than once indicating the presence of isomers. The concentrations and emissions appear in Volume 1, Appendix A.2, beginning on page 180. The results have an estimated error of +100% to -50%.

2.4.3.3 Silo Exhaust Duct - VOHAPs Results, On-site GC/MS

A portable, direct interface GC/MS was used as an on-site screening tool for the measurement of selected VOHAPs. On July 25, 1998, four separate 15-minute samples were collected at the SED between 9:00 a.m. and 10:30 a.m. through a sample conditioning system and conveyed to the GC/MS. The sample conditioning system consisted of an unheated stainless steel probe, a 0.3 micron quartz filter, a stainless steel heat exchanger, two glass impingers for moisture removal, a Teflon®-heated diaphragm pump, and Teflon® tubing connected to the GC/MS. The result of the "GC/MS" VOHAPs analyses are presented in Table 2.33. The average concentration of the selected VOHAPs measured with VOST are also presented.

2.5 PM AND MCEM DEPOSITION ESTIMATES

Measurements were made to estimate the PM and MCEM deposition on the inside walls of the TED, the inside walls of the exhaust plenum above Silo No. 2, the inside walls of the SED and on the ceiling of the load-out tunnel downstream of Silo No. 5. These estimates are summarized in Table 2.34. A more detailed account of these estimates appears in Volume 1, Appendix A.4, beginning on page 204. Silo specific load-out data was not available. It was therefore assumed for the deposition calculations that load-out was evenly spread between the five silos. For the Old SED estimate, it was assumed that Plant C produced 3,000,000 tons from start-up through July 19, 1998.

The Method 315 results in Table 2.1 show that all the PM in the TED was MCEM. The deposition estimates for the TED, however, show significantly more PM than MCEM. The difference points to a high bias in the deposition estimates due to ambient dust generated in the load-out tunnel and drawn into the TED each morning at start-up. This bias is discussed in more detail in Section 5.12.

2.6 METEOROLOGICAL STATION RESULTS

A meteorological (MET) monitoring station was positioned on top of the load-out tunnel, above the entrance. The station monitored the wind speed, wind direction, and ambient temperature. Readings from the MET station were recorded once per minute during the testing and downloaded to a data acquisition system. Due to a hardware problem, no data were collected on 7/26/98 during the background condition testing. Ambient humidity was measured manually using a sling psychrometer and recorded in a field notebook. Table 2.35 summarizes the meteorological data collected. Figure 2.1 shows the position of the load-out tunnel and the MET station and the average wind direction for each test day.

TABLE 2.6

PM AND MCEM
EMISSIONS SAMPLING AND EXHAUST GAS PARAMETERS
NORMAL OPERATIONS, TUNNEL EXHAUST DUCT
ASPHALT PLANT C - CALIFORNIA

Run No.	T-M315-1	T-M315-2	T-M315-3	Average
Date	7/24/98	7/25/98	7/27/98	
Clock Time, 24-hr clock	0720-1303	0711-1127	0711-1200	
Total Sampling Time, minutes	240	240	240	
Average Sampling Rate, dscfm [a]	0.671	0.679	0.636	0.662
Capture Efficiency, percent [b]	64	65	54	61
Sample Volume:				
dscf [c]	160.986	162.940	152.700	158.875
dscm [d]	4.559	4.614	4.324	4.499
Average Exhaust Gas Temperature, °F	85	88	94	89
Moisture, % by Volume	3.5	2.4	1.9	2.6
Exhaust Gas Volumetric Flow Rate:				
acfm [e]	11,200	11,200	10,500	11,000
dscfm [a]	10,200	10,200	9,510	9,970
dscmm [f]	288	289	269	282
Isokinetic Sampling Ratio, %	101.6	102.4	103.7	102.6
Process Parameters				
RTFOT Results, Mass Change at 325°F, % [g]	-0.362	-0.322	-0.284	-0.322
Asphalt Temperature at Load-out, °F [h]	321	316	291	310
Asphalt Loaded per Test Period, Tons [i]	1,875.0	1,499.7	2,529.7	1,968.1

[a] Dry standard cubic feet per minute at 68°F (20°C) and 1 atm.
[b] Lower 90% confidence level capture efficiency was determined by MRI.
[c] Dry standard cubic feet at 68°F (20°C) and 1 atm.
[d] Dry standard cubic meters at 68°F (20°C) and 1 atm.
[e] Actual cubic feet per minute at exhaust gas conditions.
[f] Dry standard cubic meters per minute at 68°F (20°C) and 1 atm.
[g] Rolling Thin Film Oven Test (ASTM D 2872) from Table 3.4 in Section 3.
[h] From Table 3.3 in Section 3.
[i] From Table 2.7 in Section 2.

TABLE 2.7

PM AND MCEM
EXHAUST GAS CONCENTRATIONS AND EMISSION RATES
NORMAL OPERATIONS, TUNNEL EXHAUST DUCT
ASPHALT PLANT C - CALIFORNIA

Run No.	T-M315-1	T-M315-2	T-M315-3	Average
Date	7/24/98	7/25/98	7/27/98	
Clock Time, 24-hr clock	0720-1303	0711-1127	0711-1200	
Net Test Time, minutes	240	240	240	
Tons of asphalt loaded per test period	1,875.0	1,499.7	2,529.7	1,968.1
Equivalent Hourly Load-out Rate, ton/hr	468.8	374.9	632.4	492.0
Particulate Matter				
Concentration, gr/dscf [a]	1.23E-03	7.39E-04	8.59E-04	9.42E-04
Concentration, g/dscm [b]	2.81E-03	1.69E-03	1.97E-03	2.15E-03
Emission Rate, lb/test period [c]	4.27E-01	2.58E-01	2.80E-01	3.22E-01
Emission Rate, lb/ton [d]	2.28E-04	1.72E-04	1.11E-04	1.70E-04
Methylene Chloride Extractable Matter				
Concentration, gr/dscf [a]	1.07E-03	2.27E-04	2.73E-04	5.25E-04
Concentration, g/dscm [b]	2.46E-03	5.20E-04	6.24E-04	1.20E-03
Emission Rate, lb/test period [c]	3.74E-01	7.95E-02	8.90E-02	1.81E-01
Emission Rate, lb/ton [d]	1.99E-04	5.30E-05	3.52E-05	9.59E-05

[a] Grains per dry standard cubic feet at 68°F (20°C) and 1 atm.

[b] Grams per dry standard cubic meters at 68°F (20°C) and 1 atm.

[c] Pounds per test period.

[d] Pounds per ton of asphalt loaded.

TABLE 2.8

PAHs AND SEMI-VOLATILE ORGANICS EMISSIONS SAMPLING AND EXHAUST GAS PARAMETERS NORMAL OPERATIONS, TUNNEL EXHAUST DUCT ASPHALT PLANT C - CALIFORNIA

Run No.	T-MM5-2	T-MM5-3	Average
Date	7/25/98	7/27/98	
Clock Time, 24-hr clock	0710-1121	0710-1155	
Total Sampling Time, minutes	240	240	
Average Sampling Rate, dscfm [a]	0.634	0.648	0.641
Capture Efficiency, percent [b]	65	54	60
Sample Volume:			
dscf [c]	152.087	155.540	153.813
dscm [d]	4.307	4.404	4.356
Average Exhaust Gas Temperature, °F	82	89	85
Moisture, % by Volume	3.5	3.5	3.5
Exhaust Gas Volumetric Flow Rate:			
acfm [e]	10,600	11,100	10,900
dscfm [a]	9,660	9,970	9,820
dscmm [f]	274	282	278
Isokinetic Sampling Ratio, %	105.8	104.8	105.3
Process Parameters			
RTFOT Results, Mass Change at 325°F, % [g]	-0.322	-0.284	-0.303
Asphalt Temperature at Load-out, °F [h]	316	291	304
Asphalt Loaded per Test Period, Tons [i]	1,478.7	2,530.2	2,004.5

[a] Dry standard cubic feet per minute at 68°F (20°C) and 1 atm.
[b] Lower 90% confidence level capture efficiency was determined by MRI.
[c] Dry standard cubic feet at 68°F (20°C) and 1 atm.
[d] Dry standard cubic meters at 68°F (20°C) and 1 atm.
[e] Actual cubic feet per minute at exhaust gas conditions.
[f] Dry standard cubic meters per minute at 68°F (20°C) and 1 atm.
[g] Rolling Thin Film Oven Test (ASTM D 2872) from Table 3.4 in Section 3.
[h] From Table 3.3 in Section 3.
[i] From Table 2.9 in Section 2

TABLE 2.9

PAHs EXHAUST GAS CONCENTRATIONS AND EMISSION RATES NORMAL OPERATIONS, TUNNEL EXHAUST DUCT ASPHALT PLANT C - CALIFORNIA

Run No.	T-MM5-2	T-MM5-3	Average
Date	7/25/98	7/27/98	
Clock Time, 24-hr clock	0710-1121	0710-1155	
Tons of asphalt loaded per test period	1478.7	2530.2	2004.45
Acenaphthene			
Concentration, ppbvd [a]	{1.63E-01}	{1.77E-01}	{1.70E-01}
Emission Rate, lb/ton [b]	{1.02E-07}	{6.70E-08}	{8.47E-08}
Acenaphthylene			
Concentration, ppbvd [a]	1.70E-02	2.09E-02	1.90E-02
Emission Rate, lb/ton [b]	1.07E-08	7.91E-09	9.30E-09
Anthracene			
Concentration, ppbvd [a]	{5.33E-02}	3.37E-02	{4.35E-02}
Emission Rate, lb/ton [b]	{3.87E-08}	1.47E-08	{2.67E-08}
Benzo(a)anthracene			
Concentration, ppbvd [a]	9.05E-03	7.42E-03	8.23E-03
Emission Rate, lb/ton [b]	8.41E-09	4.16E-09	6.28E-09
Benzo(b)fluoranthene			
Concentration, ppbvd [a]	3.54E-03	2.81E-03	3.18E-03
Emission Rate, lb/ton [b]	3.64E-09	1.74E-09	2.69E-09
Benzo(k)fluoranthene			
Concentration, ppbvd [a]	1.04E-03	7.36E-04	8.88E-04
Emission Rate, lb/ton [b]	1.07E-09	4.56E-10	7.62E-10
Benzo(ghi)perylene			
Concentration, ppbvd [a]	8.89E-04	6.52E-04	7.71E-04
Emission Rate, lb/ton [b]	1.00E-09	4.42E-10	7.21E-10
Benzo(a)pyrene			
Concentration, ppbvd [a]	1.06E-03	7.58E-04	9.10E-04
Emission Rate, lb/ton [b]	1.09E-09	4.69E-10	7.80E-10
Benzo(e)pyrene			
Concentration, ppbvd [a]	3.98E-03	2.60E-03	3.29E-03
Emission Rate, lb/ton [b]	4.09E-09	1.61E-09	2.85E-09
Chrysene			
Concentration, ppbvd [a]	{5.14E-02}	{4.55E-02}	{4.84E-02}
Emission Rate, lb/ton [b]	{4.77E-08}	{2.55E-08}	{3.66E-08}

TABLE 2.9 (Concluded)

PAHs EXHAUST GAS CONCENTRATIONS AND EMISSION RATES NORMAL OPERATIONS, TUNNEL EXHAUST DUCT ASPHALT PLANT C - CALIFORNIA

Run No.	T-MM5-2	T-MM5-3	Average
Dibenz(a,h)anthracene			
Concentration, ppbvd [a]	3.21E-04	ND	(1.61E-04)
Emission Rate, lb/ton [b]	3.64E-10	ND	(1.82E-10)
Fluoranthene			
Concentration, ppbvd [a]	{3.31E-02}	{2.51E-02}	{2.91E-02}
Emission Rate, lb/ton [b]	{2.73E-08}	{1.25E-08}	{1.99E-08}
Fluorene			
Concentration, ppbvd [a]	{7.06E-01}	{3.22E-01}	{5.14E-01}
Emission Rate, lb/ton [b]	{4.77E-07}	{1.31E-07}	{3.04E-07}
Indeno(1,2,3-cd)pyrene			
Concentration, ppbvd [a]	3.85E-04	ND	(1.92E-04)
Emission Rate, lb/ton [b]	4.55E-10	ND	(2.27E-10)
2-Methylnaphthalene			
Concentration, ppbvd [a]	{1.49E+00}	{1.81E+00}	{1.65E+00}
Emission Rate, lb/ton [b]	{8.64E-07}	{6.30E-07}	{7.47E-07}
Naphthalene			
Concentration, ppbvd [a]	{8.28E-01}	{1.02E+00}	{9.25E-01}
Emission Rate, lb/ton [b]	{4.32E-07}	{3.22E-07}	{3.77E-07}
Perylene			
Concentration, ppbvd [a]	1.17E-02	6.06E-03	8.90E-03
Emission Rate, lb/ton [b]	1.20E-08	3.75E-09	7.90E-09
Phenanthrene			
Concentration, ppbvd [a]	{6.58E-01}	{3.98E-01}	{5.28E-01}
Emission Rate, lb/ton [b]	{4.77E-07}	{1.74E-07}	{3.26E-07}
Pyrene			
Concentration, ppbvd [a]	{8.84E-02}	{7.29E-02}	{8.06E-02}
Emission Rate, lb/ton [b]	{7.28E-08}	{3.62E-08}	{5.45E-08}

[a] Parts per billion by volume dry.

[b] Pounds per ton of asphalt loaded.

ND Not Detectable - Results are below target analyte detection limit. Values are counted as zero (0) in averages.

{ } Estimate - Concentration in the sample exceeded the method calibration range, but was still within the linear response range of the detector.

( ) Results in parentheses include NDs which were averaged as zero.

TABLE 2.10

SEMI-VOLATILE ORGANICS
EXHAUST GAS CONCENTRATIONS AND EMISSION RATES
NORMAL OPERATIONS, TUNNEL EXHAUST DUCT
ASPHALT PLANT C - CALIFORNIA

Run No.	T-MM5-2	T-MM5-3	Average
Date	7/25/98	7/27/98	
Clock Time, 24-hr clock	0710-1121	0710-1155	
Tons of asphalt loaded per test period	1478.7	2530.2	2004.45
Acenaphthene			
Concentration, ppbvd [a]	ND	ND	ND
Emission Rate, lb/ton [b]	ND	ND	ND
Acenaphthylene			
Concentration, ppbvd [a]	ND	ND	ND
Emission Rate, lb/ton [b]	ND	ND	ND
Acetophenone			
Concentration, ppbvd [a]	ND	ND	ND
Emission Rate, lb/ton [b]	ND	ND	ND
4-Aminobiphenyl			
Concentration, ppbvd [a]	ND	ND	ND
Emission Rate, lb/ton [b]	ND	ND	ND
Aniline			
Concentration, ppbvd [a]	ND	ND	ND
Emission Rate, lb/ton [b]	ND	ND	ND
Anthracene			
Concentration, ppbvd [a]	ND	ND	ND
Emission Rate, lb/ton [b]	ND	ND	ND
Benzidine			
Concentration, ppbvd [a]	ND	ND	ND
Emission Rate, lb/ton [b]	ND	ND	ND
Benzo(a)anthracene			
Concentration, ppbvd [a]	ND	ND	ND
Emission Rate, lb/ton [b]	ND	ND	ND
Benzo(b)fluoranthene			
Concentration, ppbvd [a]	ND	ND	ND
Emission Rate, lb/ton [b]	ND	ND	ND
Benzo(k)fluoranthene			
Concentration, ppbvd [a]	ND	ND	ND
Emission Rate, lb/ton [b]	ND	ND	ND

TABLE 2.10 (Continued)

SEMI-VOLATILE ORGANICS
EXHAUST GAS CONCENTRATIONS AND EMISSION RATES
NORMAL OPERATIONS, TUNNEL EXHAUST DUCT
ASPHALT PLANT C - CALIFORNIA

Run No.	T-MM5-2	T-MM5-3	Average
Benzoic acid			
Concentration, ppbvd [a]	ND	ND	ND
Emission Rate, lb/ton [b]	ND	ND	ND
Benzo(g,h,i)perylene			
Concentration, ppbvd [a]	ND	ND	ND
Emission Rate, lb/ton [b]	ND	ND	ND
Benzo(a)pyrene			
Concentration, ppbvd [a]	ND	ND	ND
Emission Rate, lb/ton [b]	ND	ND	ND
Benzo(e)pyrene			
Concentration, ppbvd [a]	ND	ND	ND
Emission Rate, lb/ton [b]	ND	ND	ND
Benzyl alcohol			
Concentration, ppbvd [a]	ND	ND	ND
Emission Rate, lb/ton [b]	ND	ND	ND
Biphenyl			
Concentration, ppbvd [a]	ND	ND	ND
Emission Rate, lb/ton [b]	ND	ND	ND
4-Bromophenyl phenyl ether			
Concentration, ppbvd [a]	ND	ND	ND
Emission Rate, lb/ton [b]	ND	ND	ND
Butyl benzyl phthalate			
Concentration, ppbvd [a]	ND	ND	ND
Emission Rate, lb/ton [b]	ND	ND	ND
Chloroacetophenone			
Concentration, ppbvd [a]	ND	ND	ND
Emission Rate, lb/ton [b]	ND	ND	ND
4-Chloroaniline			
Concentration, ppbvd [a]	ND	ND	ND
Emission Rate, lb/ton [b]	ND	ND	ND
bis(2-Chloroethoxy)-methane			
Concentration, ppbvd [a]	ND	ND	ND
Emission Rate, lb/ton [b]	ND	ND	ND

TABLE 2.10 (Continued)

SEMI-VOLATILE ORGANICS
EXHAUST GAS CONCENTRATIONS AND EMISSION RATES
NORMAL OPERATIONS, TUNNEL EXHAUST DUCT
ASPHALT PLANT C - CALIFORNIA

Run No.	T-MM5-2	T-MM5-3	Average
bis(2-Chloroethyl) ether			
Concentration, ppbvd [a]	ND	ND	ND
Emission Rate, lb/ton [b]	ND	ND	ND
4-Chloro-3-methylphenol			
Concentration, ppbvd [a]	ND	ND	ND
Emission Rate, lb/ton [b]	ND	ND	ND
2-Chloronaphthalene			
Concentration, ppbvd [a]	ND	ND	ND
Emission Rate, lb/ton [b]	ND	ND	ND
2-Chlorophenol			
Concentration, ppbvd [a]	ND	ND	ND
Emission Rate, lb/ton [b]	ND	ND	ND
4-Chlorophenyl phenyl ether			
Concentration, ppbvd [a]	ND	ND	ND
Emission Rate, lb/ton [b]	ND	ND	ND
Chrysene			
Concentration, ppbvd [a]	ND	ND	ND
Emission Rate, lb/ton [b]	ND	ND	ND
Cumene			
Concentration, ppbvd [a]	ND	ND	ND
Emission Rate, lb/ton [b]	ND	ND	ND
Dibenz(a,h)anthracene			
Concentration, ppbvd [a]	ND	ND	ND
Emission Rate, lb/ton [b]	ND	ND	ND
Dibenzofuran			
Concentration, ppbvd [a]	ND	ND	ND
Emission Rate, lb/ton [b]	ND	ND	ND
1,2-Dibromo-3-chloropropane (DBCP)			
Concentration, ppbvd [a]	ND	ND	ND
Emission Rate, lb/ton [b]	ND	ND	ND
Di-n-butyl phthalate			
Concentration, ppbvd [a]	ND	ND	ND
Emission Rate, lb/ton [b]	ND	ND	ND

TABLE 2.10 (Continued)

SEMI-VOLATILE ORGANICS
EXHAUST GAS CONCENTRATIONS AND EMISSION RATES
NORMAL OPERATIONS, TUNNEL EXHAUST DUCT
ASPHALT PLANT C - CALIFORNIA

Run No.	T-MM5-2	T-MM5-3	Average
1,2-Dichlorobenzene			
Concentration, ppbvd [a]	ND	ND	ND
Emission Rate, lb/ton [b]	ND	ND	ND
1,3-Dichlorobenzene			
Concentration, ppbvd [a]	ND	ND	ND
Emission Rate, lb/ton [b]	ND	ND	ND
1,4-Dichlorobenzene			
Concentration, ppbvd [a]	ND	ND	ND
Emission Rate, lb/ton [b]	ND	ND	ND
3,3'-Dichlorobenzidine			
Concentration, ppbvd [a]	ND	ND	ND
Emission Rate, lb/ton [b]	ND	ND	ND
2,4-Dichlorophenol			
Concentration, ppbvd [a]	ND	ND	ND
Emission Rate, lb/ton [b]	ND	ND	ND
Diethyl phthalate			
Concentration, ppbvd [a]	ND	ND	ND
Emission Rate, lb/ton [b]	ND	ND	ND
N-N-Diethylaniline			
Concentration, ppbvd [a]	ND	ND	ND
Emission Rate, lb/ton [b]	ND	ND	ND
3,3'-Dimethoxybenzidine			
Concentration, ppbvd [a]	ND	ND	ND
Emission Rate, lb/ton [b]	ND	ND	ND
Dimethyl phthalate			
Concentration, ppbvd [a]	ND	ND	ND
Emission Rate, lb/ton [b]	ND	ND	ND
Dimethylaniline			
Concentration, ppbvd [a]	ND	ND	ND
Emission Rate, lb/ton [b]	ND	ND	ND
3,3'-Dimethylbenzidine			
Concentration, ppbvd [a]	ND	ND	ND
Emission Rate, lb/ton [b]	ND	ND	ND

TABLE 2.10 (Continued)

SEMI-VOLATILE ORGANICS
EXHAUST GAS CONCENTRATIONS AND EMISSION RATES
NORMAL OPERATIONS, TUNNEL EXHAUST DUCT
ASPHALT PLANT C - CALIFORNIA

Run No.	T-MM5-2	T-MM5-3	Average
2,4-Dimethylphenol			
Concentration, ppbvd [a]	ND	ND	ND
Emission Rate, lb/ton [b]	ND	ND	ND
4,6-Dinitro-2-methylphenol			
Concentration, ppbvd [a]	ND	ND	ND
Emission Rate, lb/ton [b]	ND	ND	ND
2,4-Dinitrophenol			
Concentration, ppbvd [a]	ND	ND	ND
Emission Rate, lb/ton [b]	ND	ND	ND
2,4-Dinitrotoluene			
Concentration, ppbvd [a]	ND	ND	ND
Emission Rate, lb/ton [b]	ND	ND	ND
2,6-Dinitrotoluene			
Concentration, ppbvd [a]	ND	ND	ND
Emission Rate, lb/ton [b]	ND	ND	ND
Di-n-octyl phthalate			
Concentration, ppbvd [a]	ND	ND	ND
Emission Rate, lb/ton [b]	ND	ND	ND
bis(2-Ethylhexyl)-phthalate			
Concentration, ppbvd [a]	ND	ND	ND
Emission Rate, lb/ton [b]	ND	ND	ND
Fluoranthene			
Concentration, ppbvd [a]	ND	ND	ND
Emission Rate, lb/ton [b]	ND	ND	ND
Fluorene			
Concentration, ppbvd [a]	ND	ND	ND
Emission Rate, lb/ton [b]	ND	ND	ND
Hexachlorobenzene			
Concentration, ppbvd [a]	ND	ND	ND
Emission Rate, lb/ton [b]	ND	ND	ND
Hexachlorobutadiene			
Concentration, ppbvd [a]	ND	ND	ND
Emission Rate, lb/ton [b]	ND	ND	ND

TABLE 2.10 (Continued)

SEMI-VOLATILE ORGANICS
EXHAUST GAS CONCENTRATIONS AND EMISSION RATES
NORMAL OPERATIONS, TUNNEL EXHAUST DUCT
ASPHALT PLANT C - CALIFORNIA

Run No.	T-MM5-2	T-MM5-3	Average
Hexachlorocyclopentadiene			
Concentration, ppbvd [a]	ND	ND	ND
Emission Rate, lb/ton [b]	ND	ND	ND
Hexachloroethane			
Concentration, ppbvd [a]	ND	ND	ND
Emission Rate, lb/ton [b]	ND	ND	ND
Hydroquinone			
Concentration, ppbvd [a]	ND	ND	ND
Emission Rate, lb/ton [b]	ND	ND	ND
Indeno(1,2,3-cd)pyrene			
Concentration, ppbvd [a]	ND	ND	ND
Emission Rate, lb/ton [b]	ND	ND	ND
Isophorone			
Concentration, ppbvd [a]	ND	ND	ND
Emission Rate, lb/ton [b]	ND	ND	ND
2-Methoxybenzenamine			
Concentration, ppbvd [a]	ND	ND	ND
Emission Rate, lb/ton [b]	ND	ND	ND
4,4'-Methyl-bis(2-chloroaniline)			
Concentration, ppbvd [a]	ND	ND	ND
Emission Rate, lb/ton [b]	ND	ND	ND
2-Methylnaphthalene			
Concentration, ppbvd [a]	2.36E+00	2.84E+00	2.60E+00
Emission Rate, lb/ton [b]	1.36E-06	9.92E-07	1.18E-06
2-Methylphenol			
Concentration, ppbvd [a]	ND	ND	ND
Emission Rate, lb/ton [b]	ND	ND	ND
3/4-Methylphenol			
Concentration, ppbvd [a]	ND	ND	ND
Emission Rate, lb/ton [b]	ND	ND	ND
Naphthalene			
Concentration, ppbvd [a]	ND	1.66E+00	(8.31E-01)
Emission Rate, lb/ton [b]	ND	5.23E-07	(2.61E-07)

TABLE 2.10 (Continued)

SEMI-VOLATILE ORGANICS
EXHAUST GAS CONCENTRATIONS AND EMISSION RATES
NORMAL OPERATIONS, TUNNEL EXHAUST DUCT
ASPHALT PLANT C - CALIFORNIA

Run No.	T-MM5-2	T-MM5-3	Average
2-Nitroaniline			
Concentration, ppbvd [a]	ND	ND	ND
Emission Rate, lb/ton [b]	ND	ND	ND
3-Nitroaniline			
Concentration, ppbvd [a]	ND	ND	ND
Emission Rate, lb/ton [b]	ND	ND	ND
4-Nitroaniline			
Concentration, ppbvd [a]	ND	ND	ND
Emission Rate, lb/ton [b]	ND	ND	ND
Nitrobenzene			
Concentration, ppbvd [a]	ND	ND	ND
Emission Rate, lb/ton [b]	ND	ND	ND
4-Nitrodiphenyl			
Concentration, ppbvd [a]	ND	ND	ND
Emission Rate, lb/ton [b]	ND	ND	ND
2-Nitrophenol			
Concentration, ppbvd [a]	ND	ND	ND
Emission Rate, lb/ton [b]	ND	ND	ND
4-Nitrophenol			
Concentration, ppbvd [a]	ND	ND	ND
Emission Rate, lb/ton [b]	ND	ND	ND
N-Nitrosodimethylamine			
Concentration, ppbvd [a]	ND	ND	ND
Emission Rate, lb/ton [b]	ND	ND	ND
N-Nitrosodiphenylamine			
Concentration, ppbvd [a]	ND	ND	ND
Emission Rate, lb/ton [b]	ND	ND	ND
N-Nitroso-di-n-propylamine			
Concentration, ppbvd [a]	ND	ND	ND
Emission Rate, lb/ton [b]	ND	ND	ND
N-Nitrosomorpholine			
Concentration, ppbvd [a]	ND	ND	ND
Emission Rate, lb/ton [b]	ND	ND	ND

TABLE 2.10 (Continued)

SEMI-VOLATILE ORGANICS
EXHAUST GAS CONCENTRATIONS AND EMISSION RATES
NORMAL OPERATIONS, TUNNEL EXHAUST DUCT
ASPHALT PLANT C - CALIFORNIA

Run No.	T-MM5-2	T-MM5-3	Average
2,2'-Oxybis(1-chloropropane)			
Concentration, ppbvd [a]	ND	ND	ND
Emission Rate, lb/ton [b]	ND	ND	ND
Pentachloronitrobenzene (PCNB)			
Concentration, ppbvd [a]	ND	ND	ND
Emission Rate, lb/ton [b]	ND	ND	ND
Pentachlorophenol			
Concentration, ppbvd [a]	ND	ND	ND
Emission Rate, lb/ton [b]	ND	ND	ND
Phenanthrene			
Concentration, ppbvd [a]	ND	ND	ND
Emission Rate, lb/ton [b]	ND	ND	ND
Phenol			
Concentration, ppbvd [a]	ND	3.08E+00	(1.54E+00)
Emission Rate, lb/ton [b]	ND	7.11E-07	(3.55E-07)
Pyrene			
Concentration, ppbvd [a]	ND	ND	ND
Emission Rate, lb/ton [b]	ND	ND	ND
o-Toluidine			
Concentration, ppbvd [a]	ND	ND	ND
Emission Rate, lb/ton [b]	ND	ND	ND
1,2,4-Trichlorobenzene			
Concentration, ppbvd [a]	ND	ND	ND
Emission Rate, lb/ton [b]	ND	ND	ND
2,4,5-Trichlorophenol			
Concentration, ppbvd [a]	ND	ND	ND
Emission Rate, lb/ton [b]	ND	ND	ND
2,4,6-Trichlorophenol			
Concentration, ppbvd [a]	ND	ND	ND
Emission Rate, lb/ton [b]	ND	ND	ND

TABLE 2.10 (Concluded)

SEMI-VOLATILE ORGANICS
EXHAUST GAS CONCENTRATIONS AND EMISSION RATES
NORMAL OPERATIONS, TUNNEL EXHAUST DUCT
ASPHALT PLANT C - CALIFORNIA

Run No.	T-MM5-2	T-MM5-3	Average
Trifluralin			
Concentration, ppbvd [a]	ND	ND	ND
Emission Rate, lb/ton [b]	ND	ND	ND

[a] Parts per billion by volume dry.

[b] Pounds per ton of asphalt loaded.

ND Not Detectable - Results are below target analyte detection limit. Values are counted as zero (0) in averages.

( ) Results in parentheses include NDs which were averaged as zero.

TABLE 2.11

VOLATILE ORGANICS - SW-846 METHOD 0030
EMISSIONS SAMPLING AND EXHAUST GAS PARAMETERS
NORMAL OPERATIONS, TUNNEL EXHAUST DUCT
ASPHALT PLANT C - CALIFORNIA

Run No.	T-V-1	T-V-2	T-V-3	Average
Date	7/24/98	7/25/98	7/27/98	
Clock Time, 24-hr clock	0829-1133	0802-1122	0917-1123	
Total Sampling Time, minutes	89.9	102.3	85.0	92.4
Capture Efficiency, percent [a]	64	65	54	61
Average Sampling Rate, dsLpm [b]	0.610	0.817	0.720	0.716
Total Sample Volume, dsL [c]	52.98	82.64	60.89	65.50
Average Exhaust Gas Temperature, °F [d]	81	82	89	84
Moisture, % by Volume [d]	3.7	3.5	3.5	3.6
Exhaust Gas Volumetric Flow Rate: [d]				
acfm [e]	11,300	10,600	11,100	11,000
dscfm [f]	10,300	9,660	9,970	9,977
dscmm [g]	292	274	282	283
Process Parameters				
RTFOT Results, Mass Change at 325°F, % [h]	-0.362	-0.322	-0.284	-0.322
Asphalt Temperature at Load-out, °F [i]	321	316	291	310
Asphalt Loaded per Test Period, Tons [j]	709.1	586.1	824.5	706.6

[a] Lower 90% confidence level capture efficiency was determined by MRI.
[b] Dry standard liters per minute at 68°F (20°C) and 1 atm.
[c] Dry standard liters at 68°F (20°C) and 1 atm.
[d] Data taken from concurrent SW-846 Method 0010 train.
[e] Actual cubic feet per minute at exhaust gas conditions.
[f] Dry standard cubic feet per minute at 68°F (20°C) and 1 atm.
[g] Dry standard cubic meters per minute at 68°F (20°C) and 1 atm.
[h] Rolling Thin Film Oven Test (ASTM D 2872) from Table 3.4 in Section 3.
[i] From Table 3.3 in Section 3.
[j] From Table 2.12 in Section 2.

TABLE 2.12

VOLATILE ORGANICS - SW-846 METHOD 0030
EXHAUST GAS CONCENTRATIONS AND EMISSION RATES
NORMAL OPERATIONS, TUNNEL EXHAUST DUCT
ASPHALT PLANT C - CALIFORNIA

Run No.	T-V-1	T-V-2	T-V-3	Average
Date	7/24/98	7/25/98	7/27/98	
Clock Time, 24-hr clock	0829-1133	0802-1122	0917-1123	
Tons of asphalt loaded per test period	709.1	586.1	824.5	706.6
Acetone				
Concentration, ppbvd [a]	{8.18E+00}	4.30E+00	(1.24E+00)	(4.57E+00)
Emission Rate, lb/ton [b]	{1.61E-06}	1.09E-06	(1.93E-07)	(9.65E-07)
Acrylonitrile				
Concentration, ppbvd [a]	ND	ND	ND	ND
Emission Rate, lb/ton [b]	ND	ND	ND	ND
Allyl chloride				
Concentration, ppbvd [a]	ND	ND	ND	ND
Emission Rate, lb/ton [b]	ND	ND	ND	ND
Benzene				
Concentration, ppbvd [a]	4.37E+00	2.85E+00	1.80E+00	3.01E+00
Emission Rate, lb/ton [b]	1.16E-06	9.75E-07	3.75E-07	8.35E-07
Bromodichloromethane				
Concentration, ppbvd [a]	ND	ND	ND	ND
Emission Rate, lb/ton [b]	ND	ND	ND	ND
Bromoform				
Concentration, ppbvd [a]	ND	ND	ND	ND
Emission Rate, lb/ton [b]	ND	ND	ND	ND
Bromomethane				
Concentration, ppbvd [a]	{1.17E+00}	(3.25E-01)	(2.08E-02)	(5.06E-01)
Emission Rate, lb/ton [b]	{3.77E-07}	(1.35E-07)	(5.27E-09)	(1.72E-07)
1,3-Butadiene				
Concentration, ppbvd [a]	ND	ND	ND	ND
Emission Rate, lb/ton [b]	ND	ND	ND	ND
2-Butanone				
Concentration, ppbvd [a]	(3.59E+00)	(3.29E+00)	(9.10E-01)	(2.60E+00)
Emission Rate, lb/ton [b]	(8.77E-07)	(1.04E-06)	(1.75E-07)	(6.97E-07)
Carbon disulfide				
Concentration, ppbvd [a]	{2.98E-01}	{1.02E+00}	{2.70E-01}	{5.30E-01}
Emission Rate, lb/ton [b]	{7.69E-08}	{3.40E-07}	{5.48E-08}	{1.57E-07}

TABLE 2.12 (Continued)

VOLATILE ORGANICS - SW-846 METHOD 0030
EXHAUST GAS CONCENTRATIONS AND EMISSION RATES
NORMAL OPERATIONS, TUNNEL EXHAUST DUCT
ASPHALT PLANT C - CALIFORNIA

Run No.	T-V-1	T-V-2	T-V-3	Average
Carbon tetrachloride				
Concentration, ppbvd [a]	ND	ND	ND	ND
Emission Rate, lb/ton [b]	ND	ND	ND	ND
Chlorobenzene				
Concentration, ppbvd [a]	ND	ND	ND	ND
Emission Rate, lb/ton [b]	ND	ND	ND	ND
Chloroethane				
Concentration, ppbvd [a]	(4.93E-02)	ND	ND	(1.64E-02)
Emission Rate, lb/ton [b]	(1.08E-08)	ND	ND	(3.59E-09)
Chloroform				
Concentration, ppbvd [a]	ND	ND	ND	ND
Emission Rate, lb/ton [b]	ND	ND	ND	ND
Chloromethane				
Concentration, ppbvd [a]	2.14E+00	{1.33E+00}	(5.71E-01)	(1.35E+00)
Emission Rate, lb/ton [b]	3.66E-07	{2.93E-07}	(7.70E-08)	(2.45E-07)
Cumene				
Concentration, ppbvd [a]	ND	ND	ND	ND
Emission Rate, lb/ton [b]	ND	ND	ND	ND
Dibromochloromethane				
Concentration, ppbvd [a]	ND	ND	ND	ND
Emission Rate, lb/ton [b]	ND	ND	ND	ND
1,2-Dibromoethane				
Concentration, ppbvd [a]	ND	ND	ND	ND
Emission Rate, lb/ton [b]	ND	ND	ND	ND
1,1-Dichloroethane				
Concentration, ppbvd [a]	ND	ND	ND	ND
Emission Rate, lb/ton [b]	ND	ND	ND	ND
1,2-Dichloroethane				
Concentration, ppbvd [a]	ND	ND	ND	ND
Emission Rate, lb/ton [b]	ND	ND	ND	ND
1,1-Dichloroethene				
Concentration, ppbvd [a]	ND	ND	ND	ND
Emission Rate, lb/ton [b]	ND	ND	ND	ND

TABLE 2.12 (Continued)

VOLATILE ORGANICS - SW-846 METHOD 0030
EXHAUST GAS CONCENTRATIONS AND EMISSION RATES
NORMAL OPERATIONS, TUNNEL EXHAUST DUCT
ASPHALT PLANT C - CALIFORNIA

Run No.	T-V-1	T-V-2	T-V-3	Average
cis-1,2-Dichloroethene				
Concentration, ppbvd [a]	ND	ND	ND	ND
Emission Rate, lb/ton [b]	ND	ND	ND	ND
trans-1,2-Dichloroethene				
Concentration, ppbvd [a]	ND	ND	ND	ND
Emission Rate, lb/ton [b]	ND	ND	ND	ND
1,2-Dichloropropane				
Concentration, ppbvd [a]	ND	ND	ND	ND
Emission Rate, lb/ton [b]	ND	ND	ND	ND
cis-1,3-Dichloropropene				
Concentration, ppbvd [a]	ND	ND	ND	ND
Emission Rate, lb/ton [b]	ND	ND	ND	ND
trans-1,3-Dichloropropene				
Concentration, ppbvd [a]	ND	ND	ND	ND
Emission Rate, lb/ton [b]	ND	ND	ND	ND
1,2-Epoxybutane				
Concentration, ppbvd [a]	ND	ND	ND	ND
Emission Rate, lb/ton [b]	ND	ND	ND	ND
Ethyl acrylate				
Concentration, ppbvd [a]	ND	ND	ND	ND
Emission Rate, lb/ton [b]	ND	ND	ND	ND
Ethylbenzene				
Concentration, ppbvd [a]	1.58E+00	{4.41E-01}	7.85E-01	{9.36E-01}
Emission Rate, lb/ton [b]	5.69E-07	{2.05E-07}	2.22E-07	{3.32E-07}
n-Hexane				
Concentration, ppbvd [a]	{2.04E+00}	{2.26E+00}	{1.76E+00}	{2.02E+00}
Emission Rate, lb/ton [b]	{5.97E-07}	{8.54E-07}	{4.05E-07}	{6.18E-07}
2-Hexanone				
Concentration, ppbvd [a]	ND	ND	ND	ND
Emission Rate, lb/ton [b]	ND	ND	ND	ND
Iodomethane				
Concentration, ppbvd [a]	ND	ND	ND	ND
Emission Rate, lb/ton [b]	ND	ND	ND	ND

TABLE 2.12 (Continued)

VOLATILE ORGANICS - SW-846 METHOD 0030
EXHAUST GAS CONCENTRATIONS AND EMISSION RATES
NORMAL OPERATIONS, TUNNEL EXHAUST DUCT
ASPHALT PLANT C - CALIFORNIA

Run No.	T-V-1	T-V-2	T-V-3	Average
Isooctane				
Concentration, ppbvd [a]	ND	{2.17E-01}	(4.15E-02)	(8.60E-02)
Emission Rate, lb/ton [b]	ND	{1.08E-07}	(1.27E-08)	(4.03E-08)
Methyl methacrylate				
Concentration, ppbvd [a]	ND	ND	ND	ND
Emission Rate, lb/ton [b]	ND	ND	ND	ND
Methylene chloride				
Concentration, ppbvd [a]	{4.63E+00}	(2.17E+00)	{6.44E+00}	(4.41E+00)
Emission Rate, lb/ton [b]	{1.33E-06}	(8.07E-07)	{1.46E-06}	(1.20E-06)
4-Methyl-2-pentanone				
Concentration, ppbvd [a]	ND	ND	ND	ND
Emission Rate, lb/ton [b]	ND	ND	ND	ND
MTBE				
Concentration, ppbvd [a]	(9.79E-02)	{4.29E-01}	{2.91E-01}	(2.73E-01)
Emission Rate, lb/ton [b]	(2.92E-08)	{1.66E-07}	{6.85E-08}	(8.78E-08)
Styrene				
Concentration, ppbvd [a]	ND	(2.99E-01)	{3.87E-01}	(2.29E-01)
Emission Rate, lb/ton [b]	ND	(1.36E-07)	{1.08E-07}	(8.13E-08)
1,1,2,2-Tetrachloroethane				
Concentration, ppbvd [a]	ND	ND	ND	ND
Emission Rate, lb/ton [b]	ND	ND	ND	ND
Tetrachloroethene				
Concentration, ppbvd [a]	(2.52E-01)	{2.07E-01}	{1.57E-01}	(2.05E-01)
Emission Rate, lb/ton [b]	(1.42E-07)	{1.50E-07}	{6.96E-08}	(1.20E-07)
Toluene				
Concentration, ppbvd [a]	{6.29E+00}	2.34E+00	2.70E+00	{3.78E+00}
Emission Rate, lb/ton [b]	{1.96E-06}	9.44E-07	6.63E-07	{1.19E-06}
1,1,1-Trichloroethane				
Concentration, ppbvd [a]	ND	ND	ND	ND
Emission Rate, lb/ton [b]	ND	ND	ND	ND
1,1,2-Trichloroethane				
Concentration, ppbvd [a]	ND	ND	ND	ND
Emission Rate, lb/ton [b]	ND	ND	ND	ND

TABLE 2.12 (Concluded)

VOLATILE ORGANICS - SW-846 METHOD 0030
EXHAUST GAS CONCENTRATIONS AND EMISSION RATES
NORMAL OPERATIONS, TUNNEL EXHAUST DUCT
ASPHALT PLANT C - CALIFORNIA

Run No.	T-V-1	T-V-2	T-V-3	Average
Trichloroethene				
Concentration, ppbvd [a]	ND	ND	ND	ND
Emission Rate, lb/ton [b]	ND	ND	ND	ND
Trichlorofluoromethane				
Concentration, ppbvd [a]	(5.62E-02)	(7.20E-02)	{8.05E-02}	(6.96E-02)
Emission Rate, lb/ton [b]	(2.61E-08)	(4.33E-08)	{2.95E-08}	(3.30E-08)
Vinyl acetate				
Concentration, ppbvd [a]	ND	ND	ND	ND
Emission Rate, lb/ton [b]	ND	ND	ND	ND
Vinyl bromide				
Concentration, ppbvd [a]	ND	ND	ND	ND
Emission Rate, lb/ton [b]	ND	ND	ND	ND
Vinyl chloride				
Concentration, ppbvd [a]	ND	ND	ND	ND
Emission Rate, lb/ton [b]	ND	ND	ND	ND
m-/p-Xylene				
Concentration, ppbvd [a]	{9.22E+00}	{2.50E+00}	3.82E+00	{5.18E+00}
Emission Rate, lb/ton [b]	{3.32E-06}	{1.16E-06}	1.08E-06	{1.85E-06}
o-Xylene				
Concentration, ppbvd [a]	2.85E+00	{7.16E-01}	1.39E+00	{1.65E+00}
Emission Rate, lb/ton [b]	1.03E-06	{3.33E-07}	3.93E-07	{5.84E-07}

[a] Parts per billion by volume dry.

[b] Pounds per ton of asphalt loaded

ND Not Detectable - Results are below target analyte detection limit. Values are counted as zero (0) in averages.

{ } Estimate - Concentration exceeds calibration range.

( ) Results in parentheses include NDs which were averaged as zero.

TABLE 2.13

VOLATILE ORGANICS - EPA METHOD 18
EMISSIONS SAMPLING AND EXHAUST GAS PARAMETERS
NORMAL OPERATIONS, TUNNEL EXHAUST DUCT
ASPHALT PLANT C - CALIFORNIA

Run No.	T-M18-1A	T-M18-2A	T-M18-3A	Average
Date	7/24/98	7/25/98	7/27/98	
Clock Time, 24-hr clock	0720-1256	0710-1126	0710-1155	
Total Sampling Time, minutes	240	240	240	240
Capture Efficiency, percent [a]	64	65	54	61
Average Sampling Rate, dsLpm [b]	0.966	0.960	0.961	0.962
Total Sample Volume, dsL [c]	231.9	230.3	230.7	231.0
Average Exhaust Gas Temperature, °F [d]	81	82	89	84
Moisture, % by Volume [d]	3.7	3.5	3.5	3.6
Exhaust Gas Volumetric Flow Rate: [d]				
acfm [e]	11,300	10,600	11,100	11,000
dscfm [f]	10,300	9,660	9,970	9,977
dscmm [g]	292	274	282	283
Process Parameters				
RTFOT Results, Mass Change at 325°F, % [h]	-0.362	-0.322	-0.284	-0.322
Asphalt Temperature at Load-out, °F [i]	321	316	291	310
Asphalt Loaded per Test Period, Tons [j]	1,853.8	1,499.7	2,530.2	1,961.2

[a] Lower 90% confidence level capture efficiency was determined by MRI.

[b] Dry standard liters per minute at 68°F (20°C) and 1 atm.

[c] Dry standard liters at 68°F (20°C) and 1 atm.

[d] Data taken from concurrent SW-846 Method 0010 train.

[e] Actual cubic feet per minute at exhaust gas conditions.

[f] Dry standard cubic feet per minute at 68°F (20°C) and 1 atm.

[g] Dry standard cubic meters per minute at 68°F (20°C) and 1 atm.

[h] Rolling Thin Film Oven Test (ASTM D 2872) from Table 3.4 in Section 3.

[i] From Table 3.3 in Section 3.

[j] From Table 2.14 in Section 2.

TABLE 2.14

VOLATILE ORGANICS - EPA METHOD 18
EXHAUST GAS CONCENTRATIONS AND EMISSION RATES
NORMAL OPERATIONS, TUNNEL EXHAUST DUCT
ASPHALT PLANT C - CALIFORNIA

Run No.	T-M18-1A	T-M18-2A	T-M18-3A	Average
Date	7/24/98	7/25/98	7/27/98	
Clock Time, 24-hr clock	0720-1256	0710-1126	0710-1155	
Tons of asphalt loaded per test period	1,853.8	1,499.7	2,530.2	1,961.2
Benzene				
Concentration, ppbvd [a]	ND	{6.86E+00}	ND	(2.29E+00)
Emission Rate, lb/ton [b]	ND	{2.15E-06}	ND	(7.17E-07)
Cumene				
Concentration, ppbvd [a]	{1.39E+01}	{9.82E+00}	ND	(7.91E+00)
Emission Rate, lb/ton [b]	{5.78E-06}	{4.74E-06}	ND	(3.51E-06)
Ethylbenzene				
Concentration, ppbvd [a]	3.22E+01	4.04E+01	{1.21E+01}	{2.82E+01}
Emission Rate, lb/ton [b]	1.18E-05	1.72E-05	{3.15E-06}	{1.07E-05}
Hexane				
Concentration, ppbvd [a]	{1.18E+01}	{2.23E+01}	ND	(1.14E+01)
Emission Rate, lb/ton [b]	{3.52E-06}	{7.71E-06}	ND	(3.74E-06)
Toluene				
Concentration, ppbvd [a]	{1.71E+01}	{2.91E+01}	{1.14E+01}	{1.92E+01}
Emission Rate, lb/ton [b]	{5.45E-06}	{1.08E-05}	{2.59E-06}	{6.27E-06}
m-Xylene				
Concentration, ppbvd [a]	{6.97E+00}	{6.76E+00}	ND	(4.58E+00)
Emission Rate, lb/ton [b]	{2.56E-06}	{2.88E-06}	ND	(1.81E-06)
o-Xylene				
Concentration, ppbvd [a]	{7.80E+00}	{5.57E+00}	ND	(4.46E+00)
Emission Rate, lb/ton [b]	{2.86E-06}	{2.37E-06}	ND	(1.75E-06)
p-Xylene				
Concentration, ppbvd [a]	{2.08E+01}	{1.32E+01}	ND	(1.13E+01)
Emission Rate, lb/ton [b]	{7.64E-06}	{5.62E-06}	ND	(4.42E-06)

[a] Parts per billion by volume dry.

[b] Pounds per ton of asphalt loaded.

ND Not Detectable - Results are below target analyte detection limit. Values are counted as zero (0) in averages.

{ } Estimate - Concentration exceeds calibration range.

( ) Results in parentheses include NDs which were averaged as zero.

TABLE 2.15

ON-SITE GC/MS VOLATILE ORGANICS EXHAUST GAS CONCENTRATIONS AND EMISSION RATES WITH VOST (SW-846 METHOD 0030) AND EPA METHOD 18 COMPARISON
TUNNEL EXHAUST DUCT
ASPHALT PLANT C, CALIFORNIA
7/24/98

Sample ID	TED-72409	TED-72410	TED-72411	TED-BAG01	TED-BAG02	TED-BAG03	TED-BAG04	HMLO[a] BAG04	Averages		
									GC/MS Results	VOST	M18
Acquisition Time	1146	1203	1217	1230-1242	1230-1242	1230-1242	1230-1242	1220-1235		0829-1133	0720-1256
Toluene											
Concentration, ppbvd[b]	8	8	10	10	9	10	20	7.67	10.3	6.29	17.1
m/p-Xylene											
Concentration, ppbvd[b]	15	18	40	17	10	40	20	20.0	22.5	9.22	27.8[c]
Ethyl Benzene											
Concentration, ppbvd[b]	3	3	NA	9	9	NA	2	4.33	5.06	1.58	32.2
Benzene											
Concentration, ppbvd[b]	NA	NA	10	NA	NA	10	10	10.0	10.0	4.37	ND

[a] HMLO - Taken from Hot Mix Load-out sample above transport truck during load-out.

[b] Parts per billion by volume dry.

[c] The EPA Method 18 results lists m-xlyene and p-xylene separately. The value shown here is the sum of the two.

Notes:

"NA" indicates compound was not analyzed. "ND" indicates compound was below the detection limit (Not Detected). NDs were not averaged as zeroes in this table.

On-site GC cannot be directly related to the longer integration times - grab samples were taken only during active loading.

TABLE 2.16

PM AND MCEM
EMISSIONS SAMPLING AND EXHAUST GAS PARAMETERS
BACKGROUND CONDITION, TUNNEL EXHAUST DUCT
ASPHALT PLANT C - CALIFORNIA

Run No.	T-M315-4
Date	7/26/98
Clock Time, 24-hr clock	0926-1340
Total Sampling Time, minutes	240
Average Sampling Rate, dscfm [a]	0.698
Capture Efficiency, percent [b]	45
Sample Volume:	
dscf [c]	167.419
dscm [d]	4.741
Average Exhaust Gas Temperature, °F	91
Moisture, % by Volume	3.2
Exhaust Gas Volumetric Flow Rate:	
acfm [e]	11,800
dscfm [a]	10,500
dscmm [f]	299
Isokinetic Sampling Ratio, %	101.7

[a] Dry standard cubic feet per minute at 68°F (20°C) and 1 atm.

[b] Lower 90% confidence level capture efficiency was determined by MRI.

[c] Dry standard cubic feet at 68°F (20°C) and 1 atm.

[d] Dry standard cubic meters at 68°F (20°C) and 1 atm.

[e] Actual cubic feet per minute at exhaust gas conditions.

[f] Dry standard cubic meters per minute at 68°F (20°C) and 1 atm.

TABLE 2.17

PM AND MCEM
EXHAUST GAS CONCENTRATIONS AND EMISSION RATES
BACKGROUND CONDITION, TUNNEL EXHAUST DUCT
ASPHALT PLANT C - CALIFORNIA

Run No.	T-M315-4
Date	7/26/98
Clock Time, 24-hr clock	0926-1340
Particulate Matter (PM)	
Concentration, gr/dscf [a]	7.93E-04
Concentration, g/dscm [b]	1.81E-03
Emission Rate, lb/test period [c]	2.87E-01
Methylene Chloride Extractable Matter (MCEM)	
Concentration, gr/dscf [a]	3.78E-04
Concentration, g/dscm [b]	8.65E-04
Emission Rate, lb/test period [c]	1.37E-01

[a] Grains per dry standard cubic feet at 68°F (20°C) and 1 atm.

[b] Grams per dry standard cubic meters at 68°F (20°C) and 1 atm.

[c] Pounds per test period.

TABLE 2.18

PAHs AND SEMI-VOLATILE ORGANICS EMISSIONS SAMPLING AND EXHAUST GAS PARAMETERS BACKGROUND CONDITION, TUNNEL EXHAUST DUCT ASPHALT PLANT C - CALIFORNIA

Run No.	T-MM5-4
Date	7/26/98
Clock Time, 24-hr clock	0925-1343
Total Sampling Time, minutes	240
Average Sampling Rate, dscfm [a]	0.706
Capture Efficiency, percent [b]	45
Sample Volume:	
dscf [c]	169.391
dscm [d]	4.797
Average Exhaust Gas Temperature, °F	87
Moisture, % by Volume	3.6
Exhaust Gas Volumetric Flow Rate:	
acfm [e]	12,000
dscfm [a]	10,800
dscmm [f]	310
Isokinetic Sampling Ratio, %	105.6

[a] Dry standard cubic feet per minute at 68°F (20°C) and 1 atm.
[b] Lower 90% confidence level capture efficiency was determined by MRI.
[c] Dry standard cubic feet at 68°F (20°C) and 1 atm.
[d] Dry standard cubic meters at 68°F (20°C) and 1 atm.
[e] Actual cubic feet per minute at exhaust gas conditions.
[f] Dry standard cubic meters per minute at 68°F (20°C) and 1 atm.

TABLE 2.19

PAHs EXHAUST GAS CONCENTRATIONS AND EMISSION RATES BACKGROUND CONDITION, TUNNEL EXHAUST DUCT ASPHALT PLANT C - CALIFORNIA

Run No.	T-MM5-4
Date	7/26/98
Clock Time, 24-hr clock	0925-1343
Acenaphthene	
Concentration, ppbvd [a]	{1.79E-02}
Emission Rate, lb/test period [b]	{1.85E-05}
Acenaphthylene	
Concentration, ppbvd [a]	2.60E-03
Emission Rate, lb/test period [b]	2.69E-06
Anthracene	
Concentration, ppbvd [a]	6.19E-03
Emission Rate, lb/test period [b]	7.41E-06
Benzo(a)anthracene	
Concentration, ppbvd [a]	3.29E-04
Emission Rate, lb/test period [b]	5.05E-07
Benzo(b)fluoranthene	
Concentration, ppbvd [a]	3.58E-04
Emission Rate, lb/test period [b]	6.06E-07
Benzo(k)fluoranthene	
Concentration, ppbvd [a]	ND
Emission Rate, lb/test period [b]	ND
Benzo(ghi)perylene	
Concentration, ppbvd [a]	1.36E-04
Emission Rate, lb/test period [b]	2.53E-07
Benzo(a)pyrene	
Concentration, ppbvd [a]	ND
Emission Rate, lb/test period [b]	ND
Benzo(e)pyrene	
Concentration, ppbvd [a]	2.58E-04
Emission Rate, lb/test period [b]	4.38E-07
Chrysene	
Concentration, ppbvd [a]	6.81E-03
Emission Rate, lb/test period [b]	1.04E-05

TABLE 2.19 (Concluded)

PAHs EXHAUST GAS CONCENTRATIONS AND EMISSION RATES BACKGROUND CONDITION, TUNNEL EXHAUST DUCT ASPHALT PLANT C - CALIFORNIA

Run No.	T-MM5-4
Dibenz(a,h)anthracene	
Concentration, ppbvd [a]	ND
Emission Rate, lb/test period [b]	ND
Fluoranthene	
Concentration, ppbvd [a]	7.44E-03
Emission Rate, lb/test period [b]	1.01E-05
Fluorene	
Concentration, ppbvd [a]	{4.83E-02}
Emission Rate, lb/test period [b]	{5.39E-05}
Indeno(1,2,3-cd)pyrene	
Concentration, ppbvd [a]	ND
Emission Rate, lb/test period [b]	ND
2-Methylnaphthalene	
Concentration, ppbvd [a]	{9.17E-02}
Emission Rate, lb/test period [b]	{8.76E-05}
Naphthalene	
Concentration, ppbvd [a]	BRL
Emission Rate, lb/test period [b]	BRL
Perylene	
Concentration, ppbvd [a]	ND
Emission Rate, lb/test period [b]	ND
Phenanthrene	
Concentration, ppbvd [a]	{1.13E-01}
Emission Rate, lb/test period [b]	{1.35E-04}
Pyrene	
Concentration, ppbvd [a]	{1.49E-02}
Emission Rate, lb/test period [b]	{2.02E-05}

[a] Parts per billion by volume.

[b] Pounds per test period.

ND Not Detectable - Results are below target analyte detection limit. Values are counted as zero (0) in averages.

{ } Estimate - Concentration in the sample exceeded the method calibration range, but was still within the linear response range of the detector.

BRL Below Reporting Limit based on Equation 429-32 of CARB Method 429.

TABLE 2.20

SEMI-VOLATILE ORGANICS
EXHAUST GAS CONCENTRATIONS AND EMISSION RATES
BACKGROUND CONDITION, TUNNEL EXHAUST DUCT
ASPHALT PLANT C - CALIFORNIA

Run No.	T-MM5-4
Date	7/26/98
Clock Time, 24-hr clock	0925-1343
Acenaphthene	
Concentration, ppbvd [a]	ND
Emission Rate, lb/test period [b]	ND
Acenaphthylene	
Concentration, ppbvd [a]	ND
Emission Rate, lb/test period [b]	ND
Acetophenone	
Concentration, ppbvd [a]	ND
Emission Rate, lb/test period [b]	ND
4-Aminobiphenyl	
Concentration, ppbvd [a]	ND
Emission Rate, lb/test period [b]	ND
Aniline	
Concentration, ppbvd [a]	ND
Emission Rate, lb/test period [b]	ND
Anthracene	
Concentration, ppbvd [a]	ND
Emission Rate, lb/test period [b]	ND
Benzidine	
Concentration, ppbvd [a]	ND
Emission Rate, lb/test period [b]	ND
Benzo(a)anthracene	
Concentration, ppbvd [a]	ND
Emission Rate, lb/test period [b]	ND
Benzo(b)fluoranthene	
Concentration, ppbvd [a]	ND
Emission Rate, lb/test period [b]	ND
Benzo(k)fluoranthene	
Concentration, ppbvd [a]	ND
Emission Rate, lb/test period [b]	ND

TABLE 2.20 (Continued)

SEMI-VOLATILE ORGANICS
EXHAUST GAS CONCENTRATIONS AND EMISSION RATES
BACKGROUND CONDITION, TUNNEL EXHAUST DUCT
ASPHALT PLANT C - CALIFORNIA

Run No.	T-MM5-4
Benzoic acid	
Concentration, ppbvd [a]	ND
Emission Rate, lb/test period [b]	ND
Benzo(g,h,i)perylene	
Concentration, ppbvd [a]	ND
Emission Rate, lb/test period [b]	ND
Benzo(a)pyrene	
Concentration, ppbvd [a]	ND
Emission Rate, lb/test period [b]	ND
Benzo(e)pyrene	
Concentration, ppbvd [a]	ND
Emission Rate, lb/test period [b]	ND
Benzyl alcohol	
Concentration, ppbvd [a]	ND
Emission Rate, lb/test period [b]	ND
Biphenyl	
Concentration, ppbvd [a]	ND
Emission Rate, lb/test period [b]	ND
4-Bromophenyl phenyl ether	
Concentration, ppbvd [a]	ND
Emission Rate, lb/test period [b]	ND
Butyl benzyl phthalate	
Concentration, ppbvd [a]	ND
Emission Rate, lb/test period [b]	ND
Chloroacetophenone	
Concentration, ppbvd [a]	ND
Emission Rate, lb/test period [b]	ND
4-Chloroaniline	
Concentration, ppbvd [a]	ND
Emission Rate, lb/test period [b]	ND
bis(2-Chloroethoxy)-methane	
Concentration, ppbvd [a]	ND
Emission Rate, lb/test period [b]	ND

TABLE 2.20 (Continued)

SEMI-VOLATILE ORGANICS
EXHAUST GAS CONCENTRATIONS AND EMISSION RATES
BACKGROUND CONDITION, TUNNEL EXHAUST DUCT
ASPHALT PLANT C - CALIFORNIA

Run No.	T-MM5-4
bis(2-Chloroethyl) ether	
Concentration, ppbvd [a]	ND
Emission Rate, lb/test period [b]	ND
4-Chloro-3-methylphenol	
Concentration, ppbvd [a]	ND
Emission Rate, lb/test period [b]	ND
2-Chloronaphthalene	
Concentration, ppbvd [a]	ND
Emission Rate, lb/test period [b]	ND
2-Chlorophenol	
Concentration, ppbvd [a]	ND
Emission Rate, lb/test period [b]	ND
4-Chlorophenyl phenyl ether	
Concentration, ppbvd [a]	ND
Emission Rate, lb/test period [b]	ND
Chrysene	
Concentration, ppbvd [a]	ND
Emission Rate, lb/test period [b]	ND
Cumene	
Concentration, ppbvd [a]	ND
Emission Rate, lb/test period [b]	ND
Dibenz(a,h)anthracene	
Concentration, ppbvd [a]	ND
Emission Rate, lb/test period [b]	ND
Dibenzofuran	
Concentration, ppbvd [a]	ND
Emission Rate, lb/test period [b]	ND
1,2-Dibromo-3-chloropropane (DBCP)	
Concentration, ppbvd [a]	ND
Emission Rate, lb/test period [b]	ND
Di-n-butyl phthalate	
Concentration, ppbvd [a]	ND
Emission Rate, lb/test period [b]	ND

TABLE 2.20 (Continued)

SEMI-VOLATILE ORGANICS
EXHAUST GAS CONCENTRATIONS AND EMISSION RATES
BACKGROUND CONDITION, TUNNEL EXHAUST DUCT
ASPHALT PLANT C - CALIFORNIA

Run No.	T-MM5-4
1,2-Dichlorobenzene	
Concentration, ppbvd [a]	ND
Emission Rate, lb/test period [b]	ND
1,3-Dichlorobenzene	
Concentration, ppbvd [a]	ND
Emission Rate, lb/test period [b]	ND
1,4-Dichlorobenzene	
Concentration, ppbvd [a]	ND
Emission Rate, lb/test period [b]	ND
3,3'-Dichlorobenzidine	
Concentration, ppbvd [a]	ND
Emission Rate, lb/test period [b]	ND
2,4-Dichlorophenol	
Concentration, ppbvd [a]	ND
Emission Rate, lb/test period [b]	ND
Diethyl phthalate	
Concentration, ppbvd [a]	ND
Emission Rate, lb/test period [b]	ND
N-N-Diethylaniline	
Concentration, ppbvd [a]	ND
Emission Rate, lb/test period [b]	ND
3,3'-Dimethoxybenzidine	
Concentration, ppbvd [a]	ND
Emission Rate, lb/test period [b]	ND
Dimethyl phthalate	
Concentration, ppbvd [a]	ND
Emission Rate, lb/test period [b]	ND
Dimethylaniline	
Concentration, ppbvd [a]	ND
Emission Rate, lb/test period [b]	ND
3,3'-Dimethylbenzidine	
Concentration, ppbvd [a]	ND
Emission Rate, lb/test period [b]	ND

TABLE 2.20 (Continued)

SEMI-VOLATILE ORGANICS
EXHAUST GAS CONCENTRATIONS AND EMISSION RATES
BACKGROUND CONDITION, TUNNEL EXHAUST DUCT
ASPHALT PLANT C - CALIFORNIA

Run No.	T-MM5-4
2,4-Dimethylphenol	
Concentration, ppbvd [a]	ND
Emission Rate, lb/test period [b]	ND
4,6-Dinitro-2-methylphenol	
Concentration, ppbvd [a]	ND
Emission Rate, lb/test period [b]	ND
2,4-Dinitrophenol	
Concentration, ppbvd [a]	ND
Emission Rate, lb/test period [b]	ND
2,4-Dinitrotoluene	
Concentration, ppbvd [a]	ND
Emission Rate, lb/test period [b]	ND
2,6-Dinitrotoluene	
Concentration, ppbvd [a]	ND
Emission Rate, lb/test period [b]	ND
Di-n-octyl phthalate	
Concentration, ppbvd [a]	ND
Emission Rate, lb/test period [b]	ND
bis(2-Ethylhexyl)-phthalate	
Concentration, ppbvd [a]	ND
Emission Rate, lb/test period [b]	ND
Fluoranthene	
Concentration, ppbvd [a]	ND
Emission Rate, lb/test period [b]	ND
Fluorene	
Concentration, ppbvd [a]	ND
Emission Rate, lb/test period [b]	ND
Hexachlorobenzene	
Concentration, ppbvd [a]	ND
Emission Rate, lb/test period [b]	ND
Hexachlorobutadiene	
Concentration, ppbvd [a]	ND
Emission Rate, lb/test period [b]	ND

TABLE 2.20 (Continued)

SEMI-VOLATILE ORGANICS
EXHAUST GAS CONCENTRATIONS AND EMISSION RATES
BACKGROUND CONDITION, TUNNEL EXHAUST DUCT
ASPHALT PLANT C - CALIFORNIA

Run No.	T-MM5-4
Hexachlorocyclopentadiene	
Concentration, ppbvd [a]	ND
Emission Rate, lb/test period [b]	ND
Hexachloroethane	
Concentration, ppbvd [a]	ND
Emission Rate, lb/test period [b]	ND
Hydroquinone	
Concentration, ppbvd [a]	ND
Emission Rate, lb/test period [b]	ND
Indeno(1,2,3-cd)pyrene	
Concentration, ppbvd [a]	ND
Emission Rate, lb/test period [b]	ND
Isophorone	
Concentration, ppbvd [a]	ND
Emission Rate, lb/test period [b]	ND
2-Methoxybenzenamine	
Concentration, ppbvd [a]	ND
Emission Rate, lb/test period [b]	ND
4,4'-Methyl-bis(2-chloroaniline)	
Concentration, ppbvd [a]	ND
Emission Rate, lb/test period [b]	ND
2-Methylnaphthalene	
Concentration, ppbvd [a]	ND
Emission Rate, lb/test period [b]	ND
2-Methylphenol	
Concentration, ppbvd [a]	ND
Emission Rate, lb/test period [b]	ND
3/4-Methylphenol	
Concentration, ppbvd [a]	ND
Emission Rate, lb/test period [b]	ND
Naphthalene	
Concentration, ppbvd [a]	ND
Emission Rate, lb/test period [b]	ND

TABLE 2.20 (Continued)

SEMI-VOLATILE ORGANICS
EXHAUST GAS CONCENTRATIONS AND EMISSION RATES
BACKGROUND CONDITION, TUNNEL EXHAUST DUCT
ASPHALT PLANT C - CALIFORNIA

Run No.	T-MM5-4
2-Nitroaniline	
Concentration, ppbvd [a]	ND
Emission Rate, lb/test period [b]	ND
3-Nitroaniline	
Concentration, ppbvd [a]	ND
Emission Rate, lb/test period [b]	ND
4-Nitroaniline	
Concentration, ppbvd [a]	ND
Emission Rate, lb/test period [b]	ND
Nitrobenzene	
Concentration, ppbvd [a]	ND
Emission Rate, lb/test period [b]	ND
4-Nitrodiphenyl	
Concentration, ppbvd [a]	ND
Emission Rate, lb/test period [b]	ND
2-Nitrophenol	
Concentration, ppbvd [a]	ND
Emission Rate, lb/test period [b]	ND
4-Nitrophenol	
Concentration, ppbvd [a]	ND
Emission Rate, lb/test period [b]	ND
N-Nitrosodimethylamine	
Concentration, ppbvd [a]	ND
Emission Rate, lb/test period [b]	ND
N-Nitrosodiphenylamine	
Concentration, ppbvd [a]	ND
Emission Rate, lb/test period [b]	ND
N-Nitroso-di-n-propylamine	
Concentration, ppbvd [a]	ND
Emission Rate, lb/test period [b]	ND
N-Nitrosomorpholine	
Concentration, ppbvd [a]	ND
Emission Rate, lb/test period [b]	ND

TABLE 2.20 (Continued)

SEMI-VOLATILE ORGANICS
EXHAUST GAS CONCENTRATIONS AND EMISSION RATES
BACKGROUND CONDITION, TUNNEL EXHAUST DUCT
ASPHALT PLANT C - CALIFORNIA

Run No.	T-MM5-4
2,2'-Oxybis(1-chloropropane)	
Concentration, ppbvd [a]	ND
Emission Rate, lb/test period [b]	ND
Pentachloronitrobenzene (PCNB)	
Concentration, ppbvd [a]	ND
Emission Rate, lb/test period [b]	ND
Pentachlorophenol	
Concentration, ppbvd [a]	ND
Emission Rate, lb/test period [b]	ND
Phenanthrene	
Concentration, ppbvd [a]	ND
Emission Rate, lb/test period [b]	ND
Phenol	
Concentration, ppbvd [a]	ND
Emission Rate, lb/test period [b]	ND
Pyrene	
Concentration, ppbvd [a]	ND
Emission Rate, lb/test period [b]	ND
o-Toluidine	
Concentration, ppbvd [a]	ND
Emission Rate, lb/test period [b]	ND
1,2,4-Trichlorobenzene	
Concentration, ppbvd [a]	ND
Emission Rate, lb/test period [b]	ND
2,4,5-Trichlorophenol	
Concentration, ppbvd [a]	ND
Emission Rate, lb/test period [b]	ND
2,4,6-Trichlorophenol	
Concentration, ppbvd [a]	ND
Emission Rate, lb/test period [b]	ND

TABLE 2.20 (Concluded)

SEMI-VOLATILE ORGANICS
EXHAUST GAS CONCENTRATIONS AND EMISSION RATES
BACKGROUND CONDITION, TUNNEL EXHAUST DUCT
ASPHALT PLANT C - CALIFORNIA

Run No.	T-MM5-4
Trifluralin	
Concentration, ppbvd [a]	ND
Emission Rate, lb/test period [b]	ND

[a] Parts per billion by volume dry.

[b] Pounds per test period.

ND Not Detectable - Results are below target analyte detection limit.

TABLE 2.21

VOLATILE ORGANICS - SW-846 METHOD 0030
EMISSIONS SAMPLING AND EXHAUST GAS PARAMETERS
BACKGROUND CONDITION, TUNNEL EXHAUST DUCT
ASPHALT PLANT C - CALIFORNIA

Run No.	T-V-4
Date	7/26/98
Clock Time, 24-hr clock	0925-1222
Total Sampling Time, minutes	75
Capture Efficiency, percent [a]	45
Average Sampling Rate, dsLpm [b]	0.850
Total Sample Volume, dsL [c]	63.72
Average Exhaust Gas Temperature, °F [d]	87
Moisture, % by Volume [d]	3.6
Exhaust Gas Volumetric Flow Rate: [d]	
acfm [e]	12,000
dscfm [f]	10,800
dscmm [g]	310

[a] Lower 90% confidence level capture efficiency was determined by MRI.

[b] Dry standard liters per minute at 68°F (20°C) and 1 atm.

[c] Dry standard liters at 68°F (20°C) and 1 atm.

[d] Data taken from concurrent SW-846 Method 0010 train.

[e] Actual cubic feet per minute at exhaust gas conditions.

[f] Dry standard cubic feet per minute at 68°F (20°C) and 1 atm.

[g] Dry standard cubic meters per minute at 68°F (20°C) and 1 atm.

TABLE 2.22

VOLATILE ORGANICS - SW-846 METHOD 0030
EXHAUST GAS CONCENTRATIONS AND EMISSION RATES
BACKGROUND CONDITION, TUNNEL EXHAUST DUCT
ASPHALT PLANT C - CALIFORNIA

Run No.	T-V-4
Date	7/26/98
Clock Time, 24-hr clock	0925-1222
Acetone	
Concentration, ppbvd [a]	(2.00E+00)
Emission Rate, lb/test period [b]	(2.43E-04)
Acrylonitrile	
Concentration, ppbvd [a]	ND
Emission Rate, lb/test period [b]	ND
Allyl chloride	
Concentration, ppbvd [a]	ND
Emission Rate, lb/test period [b]	ND
Benzene	
Concentration, ppbvd [a]	{1.07E+00}
Emission Rate, lb/test period [b]	{1.75E-04}
Bromodichloromethane	
Concentration, ppbvd [a]	ND
Emission Rate, lb/test period [b]	ND
Bromoform	
Concentration, ppbvd [a]	ND
Emission Rate, lb/test period [b]	ND
Bromomethane	
Concentration, ppbvd [a]	(9.15E-02)
Emission Rate, lb/test period [b]	(1.82E-05)
1,3-Butadiene	
Concentration, ppbvd [a]	ND
Emission Rate, lb/test period [b]	ND
2-Butanone	
Concentration, ppbvd [a]	(2.67E-01)
Emission Rate, lb/test period [b]	(4.04E-05)
Carbon disulfide	
Concentration, ppbvd [a]	ND
Emission Rate, lb/test period [b]	ND

TABLE 2.22 (Continued)

VOLATILE ORGANICS - SW-846 METHOD 0030
EXHAUST GAS CONCENTRATIONS AND EMISSION RATES
BACKGROUND CONDITION, TUNNEL EXHAUST DUCT
ASPHALT PLANT C - CALIFORNIA

Run No.	T-V-4
Carbon tetrachloride	
Concentration, ppbvd [a]	ND
Emission Rate, lb/test period [b]	ND
Chlorobenzene	
Concentration, ppbvd [a]	ND
Emission Rate, lb/test period [b]	ND
Chloroethane	
Concentration, ppbvd [a]	ND
Emission Rate, lb/test period [b]	ND
Chloroform	
Concentration, ppbvd [a]	(1.90E-02)
Emission Rate, lb/test period [b]	(4.76E-06)
Chloromethane	
Concentration, ppbvd [a]	(3.74E-01)
Emission Rate, lb/test period [b]	(3.96E-05)
Cumene	
Concentration, ppbvd [a]	ND
Emission Rate, lb/test period [b]	ND
Dibromochloromethane	
Concentration, ppbvd [a]	ND
Emission Rate, lb/test period [b]	ND
1,2-Dibromoethane	
Concentration, ppbvd [a]	ND
Emission Rate, lb/test period [b]	ND
1,1-Dichloroethane	
Concentration, ppbvd [a]	ND
Emission Rate, lb/test period [b]	ND
1,2-Dichloroethane	
Concentration, ppbvd [a]	ND
Emission Rate, lb/test period [b]	ND
1,1-Dichloroethene	
Concentration, ppbvd [a]	ND
Emission Rate, lb/test period [b]	ND

TABLE 2.22 (Continued)

VOLATILE ORGANICS - SW-846 METHOD 0030
EXHAUST GAS CONCENTRATIONS AND EMISSION RATES
BACKGROUND CONDITION, TUNNEL EXHAUST DUCT
ASPHALT PLANT C - CALIFORNIA

Run No.	T-V-4
cis-1,2-Dichloroethene	
Concentration, ppbvd [a]	ND
Emission Rate, lb/test period [b]	ND
trans-1,2-Dichloroethene	
Concentration, ppbvd [a]	ND
Emission Rate, lb/test period [b]	ND
1,2-Dichloropropane	
Concentration, ppbvd [a]	ND
Emission Rate, lb/test period [b]	ND
cis-1,3-Dichloropropene	
Concentration, ppbvd [a]	ND
Emission Rate, lb/test period [b]	ND
trans-1,3-Dichloropropene	
Concentration, ppbvd [a]	ND
Emission Rate, lb/test period [b]	ND
1,2-Epoxybutane	
Concentration, ppbvd [a]	ND
Emission Rate, lb/test period [b]	ND
Ethyl acrylate	
Concentration, ppbvd [a]	ND
Emission Rate, lb/test period [b]	ND
Ethylbenzene	
Concentration, ppbvd [a]	(1.46E-01)
Emission Rate, lb/test period [b]	(3.25E-05)
n-Hexane	
Concentration, ppbvd [a]	{3.90E-01}
Emission Rate, lb/test period [b]	{7.05E-05}
2-Hexanone	
Concentration, ppbvd [a]	ND
Emission Rate, lb/test period [b]	ND
Iodomethane	
Concentration, ppbvd [a]	ND
Emission Rate, lb/test period [b]	ND

TABLE 2.22 (Continued)

VOLATILE ORGANICS - SW-846 METHOD 0030
EXHAUST GAS CONCENTRATIONS AND EMISSION RATES
BACKGROUND CONDITION, TUNNEL EXHAUST DUCT
ASPHALT PLANT C - CALIFORNIA

Run No.	T-V-4
Isooctane	
Concentration, ppbvd [a]	(1.06E-01)
Emission Rate, lb/test period [b]	(2.54E-05)
Methyl methacrylate	
Concentration, ppbvd [a]	ND
Emission Rate, lb/test period [b]	ND
Methylene chloride	
Concentration, ppbvd [a]	{1.21E+01}
Emission Rate, lb/test period [b]	{2.15E-03}
4-Methyl-2-pentanone	
Concentration, ppbvd [a]	ND
Emission Rate, lb/test period [b]	ND
MTBE	
Concentration, ppbvd [a]	(7.07E-01)
Emission Rate, lb/test period [b]	(1.31E-04)
Styrene	
Concentration, ppbvd [a]	{1.45E-01}
Emission Rate, lb/test period [b]	{3.17E-05}
1,1,2,2-Tetrachloroethane	
Concentration, ppbvd [a]	ND
Emission Rate, lb/test period [b]	ND
Tetrachloroethene	
Concentration, ppbvd [a]	(8.65E-02)
Emission Rate, lb/test period [b]	(3.01E-05)
Toluene	
Concentration, ppbvd [a]	{1.33E+00}
Emission Rate, lb/test period [b]	{2.57E-04}
1,1,1-Trichloroethane	
Concentration, ppbvd [a]	(3.40E-02)
Emission Rate, lb/test period [b]	(9.51E-06)
1,1,2-Trichloroethane	
Concentration, ppbvd [a]	ND
Emission Rate, lb/test period [b]	ND

TABLE 2.22 (Concluded)

VOLATILE ORGANICS - SW-846 METHOD 0030
EXHAUST GAS CONCENTRATIONS AND EMISSION RATES
BACKGROUND CONDITION, TUNNEL EXHAUST DUCT
ASPHALT PLANT C - CALIFORNIA

Run No.	T-V-4
Trichloroethene	
Concentration, ppbvd [a]	(2.87E-03)
Emission Rate, lb/test period [b]	(7.93E-07)
Trichlorofluoromethane	
Concentration, ppbvd [a]	(7.42E-02)
Emission Rate, lb/test period [b]	(2.14E-05)
Vinyl acetate	
Concentration, ppbvd [a]	ND
Emission Rate, lb/test period [b]	ND
Vinyl bromide	
Concentration, ppbvd [a]	ND
Emission Rate, lb/test period [b]	ND
Vinyl chloride	
Concentration, ppbvd [a]	ND
Emission Rate, lb/test period [b]	ND
m-/p-Xylene	
Concentration, ppbvd [a]	(4.09E-01)
Emission Rate, lb/test period [b]	(9.11E-05)
o-Xylene	
Concentration, ppbvd [a]	(1.74E-01)
Emission Rate, lb/test period [b]	(3.88E-05)

[a] Parts per billion by volume dry.

[b] Pounds per test period.

ND Not Detectable - Results are below target analyte detection limit. Values are counted as zero (0) in averages.

{ } Estimate - Concentration exceeds calibration range.

( ) Results in parentheses include NDs which were averaged as zero.

TABLE 2.23

VOLATILE ORGANICS - EPA METHOD 18
EMISSIONS SAMPLING AND EXHAUST GAS PARAMETERS
BACKGROUND CONDITION, TUNNEL EXHAUST DUCT
ASPHALT PLANT C - CALIFORNIA

Run No.	T-M18-4A
Date	7/26/98
Clock Time, 24-hr clock	0925-1346
Total Sampling Time, minutes	240
Capture Efficiency, percent [a]	45
Average Sampling Rate, dsLpm [b]	0.941
Total Sample Volume, dsL [c]	225.8
Average Exhaust Gas Temperature, °F [d]	87
Moisture, % by Volume [d]	3.6
Exhaust Gas Volumetric Flow Rate: [d]	
acfm [e]	12,000
dscfm [f]	10,800
dscmm [g]	310

[a] Lower 90% confidence level capture efficiency was determined by MRI.

[b] Dry standard liters per minute at 68°F (20°C) and 1 atm.

[c] Dry standard liters at 68°F (20°C) and 1 atm.

[d] Data taken from concurrent SW-846 Method 0010 train.

[e] Actual cubic feet per minute at exhaust gas conditions.

[f] Dry standard cubic feet per minute at 68°F (20°C) and 1 atm.

[g] Dry standard cubic meters per minute at 68°F (20°C) and 1 atm.

TABLE 2.24

VOLATILE ORGANICS - EPA METHOD 18
EXHAUST GAS CONCENTRATIONS AND EMISSION RATES
BACKGROUND CONDITION, TUNNEL EXHAUST DUCT
ASPHALT PLANT C - CALIFORNIA

Run No.	T-M18-4A
Date	7/26/98
Clock Time, 24-hr clock	0925-1346
Benzene	
Concentration, ppbvd [a]	ND
Emission Rate, lb/test period [b]	ND
Cumene	
Concentration, ppbvd [a]	ND
Emission Rate, lb/test period [b]	ND
Ethylbenzene	
Concentration, ppbvd [a]	{1.55E+01}
Emission Rate, lb/test period [b]	{1.10E-02}
Hexane	
Concentration, ppbvd [a]	ND
Emission Rate, lb/test period [b]	ND
Toluene	
Concentration, ppbvd [a]	{1.05E+01}
Emission Rate, lb/test period [b]	{6.48E-03}
m-Xylene	
Concentration, ppbvd [a]	ND
Emission Rate, lb/test period [b]	ND
o-Xylene	
Concentration, ppbvd [a]	ND
Emission Rate, lb/test period [b]	ND
p-Xylene	
Concentration, ppbvd [a]	ND
Emission Rate, lb/test period [b]	ND

[a] Parts per billion by volume dry.

[b] Pounds per test period.

ND Not Detectable - Results are below target analyte detection limit.

{ } Estimate - Concentration exceeds calibration range.

TABLE 2.25

SAMPLE LOG
SILO EXHAUST DUCT
ASPHALT PLANT C - CALIFORNIA

Run Number	Results Presented	Comments
S-MM5-1	No	Integrity of the sample was compromised during transport to the laboratory.
S-V-1-1	Yes	First of 3 sets of tubes for Run S-V-1. Tenax tube only; Tenax/charcoal tube lost in analysis.
S-V-1-2	Yes	Second of 3 sets of tubes for Run S-V-1.
S-V-1-3	No	Third of 3 sets of tubes for Run S-V-1; decision was made to analyze sample S-V-1-4, instead.
S-V-1-4	Yes	Fourth set of tubes from Run S-V-1.
S-M18-1	No	Analyzed but no useful data were obtained because of severe matrix interferences.
S-M315-1	Yes	No problems encountered during analysis.
S-MM5-2	Yes	Analyzed and then reanalyzed after dilution.
S-MM5-1B	No	Sampling rate was over-isokinetic; run was rejected.
S-V-2-1	No	Because of the large volume of non-target hydrocarbons present, this sample was not analyzed.
S-V-2-2	No	Because of the large volume of non-target hydrocarbons present, this sample was not analyzed.
S-V-2-3	No	Because of the large volume of non-target hydrocarbons present, this sample was not analyzed.
S-V-2-4	Yes	Only set of tubes from Run S-V-2 chosen for analysis; represents qualitative results for Run S-V-2.
S-M18-2	No	Analyzed but no useful data were obtained because of severe matrix interferences.
S-M315-2	Yes	Isokinetic rate was 110%; no problems encountered during analysis.
S-MM5-3	No	Sampling rate was over-isokinetic; run was rejected.
S-V-3-1	No	Because of the large volume of non-target hydrocarbons present, this sample was not analyzed.
S-V-3-2	No	Because of the large volume of non-target hydrocarbons present, this sample was not analyzed.
S-V-3-3	Yes	Only set of tubes from Run S-V-3 chosen for analysis; represents qualitative results for Run S-V-3.
S-V-3-4	No	Because of the large volume of non-target hydrocarbons present, this sample was not analyzed.
S-V-3-5	No	Because of the large volume of non-target hydrocarbons present, this sample was not analyzed.
S-V-3-6	No	Because of the large volume of non-target hydrocarbons present, this sample was not analyzed.
S-M18-3	No	Analyzed but no useful data were obtained because of severe matrix interferences.
S-M315-3	No	Sampling rate was over-isokinetic; run was rejected.
S-M315-4	Yes	No problems encountered during analysis.
S-MM5-4	Yes	Analyzed and then reanalyzed after dilution.
S-MM5-5	Yes	Analyzed and then reanalyzed after dilution.

TABLE 2.26

PM AND MCEM
EMISSIONS SAMPLING AND EXHAUST GAS PARAMETERS
SILO EXHAUST DUCT
ASPHALT PLANT C - CALIFORNIA

Run No.	S-M315-1	S-M315-2	S-M315-4	Average
Date	7/24/98	7/25/98	7/28/98	
Clock Time, 24-hr clock	1141-1243	1015-1117	0649-0840	
Total Sampling Time, minutes	60	60	60	
Average Sampling Rate, dscfm [a]	0.677	0.680	0.566	0.641
Sample Volume:				
dscf [b]	40.646	40.819	33.959	38.475
dscm [c]	1.151	1.156	0.962	1.089
Average Exhaust Gas Temperature, °F	256	270	228	251
Moisture, % by Volume	15.4	24.6	47.1	29.1
Exhaust Gas Volumetric Flow Rate:				
acfm [d]	753	800	754	769
dscfm [a]	459	426	297	394
dscmm [e]	13.0	12.1	8.41	11.2
Isokinetic Sampling Ratio, %	102.3	110.6	101.7	104.9
Process Parameters				
RTFOT Results, Mass Change at 325°F, % [f]	-0.362	-0.322	-0.346	-0.343
Asphalt Temperature at Load-out, °F [g, i]	321	316	NM	319
Asphalt Loaded per Test Period, Tons [h]	336.7	282.7	402.4	340.6

[a] Dry standard cubic feet per minute at 68°F (20°C) and 1 atm.
[b] Dry standard cubic feet at 68°F (20°C) and 1 atm.
[c] Dry standard cubic meters at 68°F (20°C) and 1 atm.
[d] Actual cubic feet per minute at exhaust gas conditions.
[e] Dry standard cubic meters per minute at 68°F (20°C) and 1 atm.
[f] Rolling Thin Film Oven Test (ASTM D 2872) from Table 3.4 in Section 3.
[g] From Table 3.3 in Section 3.
[h] From Table 2.27 in Section 2.
[i] NM = Not Measured.

TABLE 2.27

PM AND MCEM
EXHAUST GAS CONCENTRATIONS AND EMISSION RATES
SILO EXHAUST DUCT
ASPHALT PLANT C - CALIFORNIA

Run No.	S-M315-1	S-M315-2	S-M315-4	Average
Date	7/24/98	7/25/98	7/28/98	
Clock Time, 24-hr clock	1141-1243	1015-1117	0649-0840	
Tons of asphalt loaded in, per test period	336.7	282.7	402.4	340.6
Particulate Matter (PM)				
Concentration, gr/dscf [a]	5.10E-02	3.39E-02	2.42E-02	3.63E-02
Concentration, g/dscm [b]	1.17E-01	7.75E-02	5.54E-02	8.32E-02
Emission Rate, lb/test period [c]	2.00E-01	1.24E-01	6.16E-02	1.29E-01
Emission Rate, lb/ton [d]	5.95E-04	4.37E-04	1.53E-04	3.95E-04
Methylene Chloride Extractable Matter (MCEM)				
Concentration, gr/dscf [a]	1.77E-02	1.24E-02	5.54E-03	1.19E-02
Concentration, g/dscm [b]	4.04E-02	2.83E-02	1.27E-02	2.71E-02
Emission Rate, lb/test period [c]	6.94E-02	4.51E-02	1.41E-02	4.29E-02
Emission Rate, lb/ton [d]	2.06E-04	1.60E-04	3.51E-05	1.34E-04

[a] Grains per dry standard cubic feet at 68°F (20°C) and 1 atm.

[b] Grams per dry standard cubic meters at 68°F (20°C) and 1 atm.

[c] Pounds per test period.

[d] Pounds per ton of asphalt loaded in.

TABLE 2.28

PAHs AND SEMI-VOLATILE ORGANICS EMISSIONS SAMPLING AND EXHAUST GAS PARAMETERS SILO EXHAUST DUCT ASPHALT PLANT C - CALIFORNIA

Run No.	S-MM5-2	S-MM5-4	S-MM5-5	Average
Date	7/25/98	7/28/98	7/28/98	
Clock Time, 24-hr clock	0710-0950	0913-1323	1358-1940	
Total Sampling Time, minutes	120	120	120	
Average Sampling Rate, dscfm [a]	0.706	0.400	0.769	0.625
Sample Volume:				
dscf [b]	84.662	47.947	92.325	74.978
dscm [c]	2.397	1.358	2.614	2.123
Average Exhaust Gas Temperature, °F	241	270	270	261
Moisture, % by Volume	22.5	52.7	36.3	37.2
Exhaust Gas Volumetric Flow Rate:				
acfm [d]	780	698	684	721
dscfm [a]	445	232	305	327
dscmm [e]	12.6	6.56	8.64	9.27
Isokinetic Sampling Ratio, %	109.9	92.1	100.8	100.9
Process Parameters				
RTFOT Results, Mass Change at 325°F, % [f,i]	-0.322	-0.346	-0.346	-0.334
Asphalt Temperature at Load-out, °F [g,j]	316	NM	NM	316
Asphalt Loaded per Test Period, Tons [h]	602.5	881.0	709.4	731.0

[a] Dry standard cubic feet per minute at 68°F (20°C) and 1 atm.
[b] Dry standard cubic feet at 68°F (20°C) and 1 atm.
[c] Dry standard cubic meters at 68°F (20°C) and 1 atm.
[d] Actual cubic feet per minute at exhaust gas conditions.
[e] Dry standard cubic meters per minute at 68°F (20°C) and 1 atm.
[f] Rolling Thin Film Oven Test (ASTM D 2872) from Table 3.4 in Section 3.
[g] From Table 3.3 in Section 3.
[h] From Table 2.29 in Section 2.
[i] Average mass change for 7/25/98 and 7/28/98.
[j] NM = Not Measured.

TABLE 2.29

PAHs EXHAUST GAS CONCENTRATIONS AND EMISSION RATES
SILO EXHAUST DUCT
ASPHALT PLANT C - CALIFORNIA

Run No.	S-MM5-2	S-MM5-4	S-MM5-5	Average
Date	7/25/98	7/28/98	7/28/98	
Clock Time, 24-hr clock	0710-0950	0913-1323	1358-1940	
Tons of asphalt loaded per test period	602.5	881.0	709.4	731.0
Acenaphthene				
Concentration, ppbvd [a]	1.24E+01	1.95E+01	2.21E+01	1.80E+01
Emission Rate, lb/ton [b]	4.38E-07	2.46E-07	4.56E-07	3.80E-07
Acenaphthylene				
Concentration, ppbvd [a]	ND	ND	1.31E+00	(4.38E-01)
Emission Rate, lb/ton [b]	ND	ND	2.71E-08	(9.04E-09)
Anthracene				
Concentration, ppbvd [a]	3.21E+00	5.57E+00	4.85E+00	4.54E+00
Emission Rate, lb/ton [b]	1.31E-07	8.12E-08	1.16E-07	1.10E-07
Benzo(a)anthracene				
Concentration, ppbvd [a]	7.47E-01	2.02E+00	1.73E+00	1.50E+00
Emission Rate, lb/ton [b]	3.92E-08	3.77E-08	5.30E-08	4.33E-08
Benzo(b)fluoranthene				
Concentration, ppbvd [a]	ND	ND	ND	ND
Emission Rate, lb/ton [b]	ND	ND	ND	ND
Benzo(k)fluoranthene				
Concentration, ppbvd [a]	ND	ND	ND	ND
Emission Rate, lb/ton [b]	ND	ND	ND	ND
Benzo(g,h,i)perylene				
Concentration, ppbvd [a]	ND	ND	ND	ND
Emission Rate, lb/ton [b]	ND	ND	ND	ND
Benzo(a)pyrene				
Concentration, ppbvd [a]	ND	ND	ND	ND
Emission Rate, lb/ton [b]	ND	ND	ND	ND
Benzo(e)pyrene				
Concentration, ppbvd [a]	ND	ND	5.47E-01	(1.82E-01)
Emission Rate, lb/ton [b]	ND	ND	1.85E-08	(6.17E-09)
Chrysene				
Concentration, ppbvd [a]	2.81E+00	7.53E+00	6.45E+00	5.60E+00
Emission Rate, lb/ton [b]	1.48E-07	1.41E-07	1.97E-07	1.62E-07

TABLE 2.29 (Concluded)

PAHs EXHAUST GAS CONCENTRATIONS AND EMISSION RATES
SILO EXHAUST DUCT
ASPHALT PLANT C - CALIFORNIA

Run No.	S-MM5-2	S-MM5-4	S-MM5-5	Average
Dibenz(a,h)anthracene				
Concentration, ppbvd [a]	ND	ND	ND	ND
Emission Rate, lb/ton [b]	ND	ND	ND	ND
Fluoranthene				
Concentration, ppbvd [a]	2.73E+00	5.87E+00	4.55E+00	4.38E+00
Emission Rate, lb/ton [b]	1.27E-07	9.71E-08	1.23E-07	1.16E-07
Fluorene				
Concentration, ppbvd [a]	3.62E+01	3.62E+01	3.54E+01	3.60E+01
Emission Rate, lb/ton [b]	1.38E-06	4.93E-07	7.89E-07	8.89E-07
Indeno(1,2,3-cd)pyrene				
Concentration, ppbvd [a]	ND	ND	ND	ND
Emission Rate, lb/ton [b]	ND	ND	ND	ND
2-Methylnaphthalene				
Concentration, ppbvd [a]	1.98E+02	2.49E+02	2.20E+02	2.22E+02
Emission Rate, lb/ton [b]	6.46E-06	2.90E-06	4.19E-06	4.52E-06
Naphthalene				
Concentration, ppbvd [a]	6.26E+01	9.95E+01	9.33E+01	8.52E+01
Emission Rate, lb/ton [b]	1.84E-06	1.04E-06	1.60E-06	1.50E-06
Perylene				
Concentration, ppbvd [a]	8.35E-01	ND	1.02E+00	(6.19E-01)
Emission Rate, lb/ton [b]	4.84E-08	ND	3.45E-08	(2.77E-08)
Phenanthrene				
Concentration, ppbvd [a]	5.46E+01	6.36E+01	6.19E+01	6.01E+01
Emission Rate, lb/ton [b]	2.24E-06	9.28E-07	1.48E-06	1.55E-06
Pyrene				
Concentration, ppbvd [a]	1.14E+01	1.49E+01	1.32E+01	1.32E+01
Emission Rate, lb/ton [b]	5.30E-07	2.46E-07	3.58E-07	3.78E-07

[a] Parts per billion by volume dry.

[b] Pounds per ton of asphalt loaded in.

ND Not Detectable - Results are below target analyte detection limit. Values are counted as zero (0) in averages.

( ) Parentheses indicate the results include NDs that were averaged as zero.

TABLE 2.30

SEMI-VOLATILE ORGANICS
EXHAUST GAS CONCENTRATIONS AND EMISSION RATES
SILO EXHAUST DUCT
ASPHALT PLANT C - CALIFORNIA

Run No.	S-MM5-2	S-MM5-4	S-MM5-5	Average
Date	7/25/98	7/28/98	7/28/98	
Clock Time, 24-hr clock	0710-0950	0913-1323	1358-1940	
Tons of asphalt loaded per test period	602.5	881.0	709.4	731.0
Acenaphthene				
Concentration, ppbvd [a]	ND	ND	ND	ND
Emission Rate, lb/ton [b]	ND	ND	ND	ND
Acenaphthylene				
Concentration, ppbvd [a]	ND	ND	ND	ND
Emission Rate, lb/ton [b]	ND	ND	ND	ND
Acetophenone				
Concentration, ppbvd [a]	ND	ND	ND	ND
Emission Rate, lb/ton [b]	ND	ND	ND	ND
4-Aminobiphenyl				
Concentration, ppbvd [a]	ND	ND	ND	ND
Emission Rate, lb/ton [b]	ND	ND	ND	ND
Aniline				
Concentration, ppbvd [a]	ND	ND	ND	ND
Emission Rate, lb/ton [b]	ND	ND	ND	ND
Anthracene				
Concentration, ppbvd [a]	ND	ND	ND	ND
Emission Rate, lb/ton [b]	ND	ND	ND	ND
Benzidine				
Concentration, ppbvd [a]	ND	ND	ND	ND
Emission Rate, lb/ton [b]	ND	ND	ND	ND
Benzo(a)anthracene				
Concentration, ppbvd [a]	ND	ND	ND	ND
Emission Rate, lb/ton [b]	ND	ND	ND	ND
Benzo(b)fluoranthene				
Concentration, ppbvd [a]	ND	ND	ND	ND
Emission Rate, lb/ton [b]	ND	ND	ND	ND
Benzo(k)fluoranthene				
Concentration, ppbvd [a]	ND	ND	ND	ND
Emission Rate, lb/ton [b]	ND	ND	ND	ND

TABLE 2.30 (Continued)

SEMI-VOLATILE ORGANICS
EXHAUST GAS CONCENTRATIONS AND EMISSION RATES
SILO EXHAUST DUCT
ASPHALT PLANT C - CALIFORNIA

Run No.	S-MM5-2	S-MM5-4	S-MM5-5	Average
Benzoic acid				
Concentration, ppbvd [a]	ND	ND	ND	ND
Emission Rate, lb/ton [b]	ND	ND	ND	ND
Benzo(g,h,i)perylene				
Concentration, ppbvd [a]	ND	ND	ND	ND
Emission Rate, lb/ton [b]	ND	ND	ND	ND
Benzo(a)pyrene				
Concentration, ppbvd [a]	ND	ND	ND	ND
Emission Rate, lb/ton [b]	ND	ND	ND	ND
Benzo(e)pyrene				
Concentration, ppbvd [a]	ND	ND	ND	ND
Emission Rate, lb/ton [b]	ND	ND	ND	ND
Benzyl alcohol				
Concentration, ppbvd [a]	ND	ND	ND	ND
Emission Rate, lb/ton [b]	ND	ND	ND	ND
Biphenyl				
Concentration, ppbvd [a]	ND	ND	ND	ND
Emission Rate, lb/ton [b]	ND	ND	ND	ND
4-Bromophenyl phenyl ether				
Concentration, ppbvd [a]	ND	ND	ND	ND
Emission Rate, lb/ton [b]	ND	ND	ND	ND
Butyl benzyl phthalate				
Concentration, ppbvd [a]	ND	ND	ND	ND
Emission Rate, lb/ton [b]	ND	ND	ND	ND
Chloroacetophenone				
Concentration, ppbvd [a]	ND	ND	ND	ND
Emission Rate, lb/ton [b]	ND	ND	ND	ND
4-Chloroaniline				
Concentration, ppbvd [a]	ND	ND	ND	ND
Emission Rate, lb/ton [b]	ND	ND	ND	ND
bis(2-Chloroethoxy)-methane				
Concentration, ppbvd [a]	ND	ND	ND	ND
Emission Rate, lb/ton [b]	ND	ND	ND	ND

TABLE 2.30 (Continued)

SEMI-VOLATILE ORGANICS
EXHAUST GAS CONCENTRATIONS AND EMISSION RATES
SILO EXHAUST DUCT
ASPHALT PLANT C - CALIFORNIA

Run No.	S-MM5-2	S-MM5-4	S-MM5-5	Average
bis(2-Chloroethyl) ether				
Concentration, ppbvd [a]	ND	ND	ND	ND
Emission Rate, lb/ton [b]	ND	ND	ND	ND
4-Chloro-3-methylphenol				
Concentration, ppbvd [a]	ND	ND	ND	ND
Emission Rate, lb/ton [b]	ND	ND	ND	ND
2-Chloronaphthalene				
Concentration, ppbvd [a]	ND	ND	ND	ND
Emission Rate, lb/ton [b]	ND	ND	ND	ND
2-Chlorophenol				
Concentration, ppbvd [a]	ND	ND	ND	ND
Emission Rate, lb/ton [b]	ND	ND	ND	ND
4-Chlorophenyl phenyl ether				
Concentration, ppbvd [a]	ND	ND	ND	ND
Emission Rate, lb/ton [b]	ND	ND	ND	ND
Chrysene				
Concentration, ppbvd [a]	ND	ND	ND	ND
Emission Rate, lb/ton [b]	ND	ND	ND	ND
Cumene				
Concentration, ppbvd [a]	ND	ND	ND	ND
Emission Rate, lb/ton [b]	ND	ND	ND	ND
Dibenz(a,h)anthracene				
Concentration, ppbvd [a]	ND	ND	ND	ND
Emission Rate, lb/ton [b]	ND	ND	ND	ND
Dibenzofuran				
Concentration, ppbvd [a]	ND	ND	ND	ND
Emission Rate, lb/ton [b]	ND	ND	ND	ND
1,2-Dibromo-3-chloropropane (DBCP)				
Concentration, ppbvd [a]	ND	ND	ND	ND
Emission Rate, lb/ton [b]	ND	ND	ND	ND
Di-n-butyl phthalate				
Concentration, ppbvd [a]	ND	ND	ND	ND
Emission Rate, lb/ton [b]	ND	ND	ND	ND

TABLE 2.30 (Continued)

SEMI-VOLATILE ORGANICS
EXHAUST GAS CONCENTRATIONS AND EMISSION RATES
SILO EXHAUST DUCT
ASPHALT PLANT C - CALIFORNIA

Run No.	S-MM5-2	S-MM5-4	S-MM5-5	Average
1,2-Dichlorobenzene				
Concentration, ppbvd [a]	ND	ND	ND	ND
Emission Rate, lb/ton [b]	ND	ND	ND	ND
1,3-Dichlorobenzene				
Concentration, ppbvd [a]	ND	ND	ND	ND
Emission Rate, lb/ton [b]	ND	ND	ND	ND
1,4-Dichlorobenzene				
Concentration, ppbvd [a]	ND	ND	ND	ND
Emission Rate, lb/ton [b]	ND	ND	ND	ND
3,3'-Dichlorobenzidine				
Concentration, ppbvd [a]	ND	ND	ND	ND
Emission Rate, lb/ton [b]	ND	ND	ND	ND
2,4-Dichlorophenol				
Concentration, ppbvd [a]	ND	ND	ND	ND
Emission Rate, lb/ton [b]	ND	ND	ND	ND
Diethyl phthalate				
Concentration, ppbvd [a]	ND	ND	ND	ND
Emission Rate, lb/ton [b]	ND	ND	ND	ND
N-N-Diethylaniline				
Concentration, ppbvd [a]	ND	ND	ND	ND
Emission Rate, lb/ton [b]	ND	ND	ND	ND
3,3'-Dimethoxybenzidine				
Concentration, ppbvd [a]	ND	ND	ND	ND
Emission Rate, lb/ton [b]	ND	ND	ND	ND
Dimethyl phthalate				
Concentration, ppbvd [a]	ND	ND	ND	ND
Emission Rate, lb/ton [b]	ND	ND	ND	ND
Dimethylaniline				
Concentration, ppbvd [a]	ND	ND	ND	ND
Emission Rate, lb/ton [b]	ND	ND	ND	ND
3,3'-Dimethylbenzidine				
Concentration, ppbvd [a]	ND	ND	ND	ND
Emission Rate, lb/ton [b]	ND	ND	ND	ND

TABLE 2.30 (Continued)

SEMI-VOLATILE ORGANICS
EXHAUST GAS CONCENTRATIONS AND EMISSION RATES
SILO EXHAUST DUCT
ASPHALT PLANT C - CALIFORNIA

Run No.	S-MM5-2	S-MM5-4	S-MM5-5	Average
2,4-Dimethylphenol				
Concentration, ppbvd [a]	ND	ND	ND	ND
Emission Rate, lb/ton [b]	ND	ND	ND	ND
4,6-Dinitro-2-methylphenol				
Concentration, ppbvd [a]	ND	ND	ND	ND
Emission Rate, lb/ton [b]	ND	ND	ND	ND
2,4-Dinitrophenol				
Concentration, ppbvd [a]	ND	ND	ND	ND
Emission Rate, lb/ton [b]	ND	ND	ND	ND
2,4-Dinitrotoluene				
Concentration, ppbvd [a]	ND	ND	ND	ND
Emission Rate, lb/ton [b]	ND	ND	ND	ND
2,6-Dinitrotoluene				
Concentration, ppbvd [a]	ND	ND	ND	ND
Emission Rate, lb/ton [b]	ND	ND	ND	ND
Di-n-octyl phthalate				
Concentration, ppbvd [a]	ND	ND	ND	ND
Emission Rate, lb/ton [b]	ND	ND	ND	ND
bis(2-Ethylhexyl)-phthalate				
Concentration, ppbvd [a]	ND	ND	ND	ND
Emission Rate, lb/ton [b]	ND	ND	ND	ND
Fluoranthene				
Concentration, ppbvd [a]	ND	ND	ND	ND
Emission Rate, lb/ton [b]	ND	ND	ND	ND
Fluorene				
Concentration, ppbvd [a]	ND	ND	{3.10E+01}	(1.03E+01)
Emission Rate, lb/ton [b]	ND	ND	{6.91E-07}	(2.30E-07)
Hexachlorobenzene				
Concentration, ppbvd [a]	ND	ND	ND	ND
Emission Rate, lb/ton [b]	ND	ND	ND	ND
Hexachlorobutadiene				
Concentration, ppbvd [a]	ND	ND	ND	ND
Emission Rate, lb/ton [b]	ND	ND	ND	ND

TABLE 2.30 (Continued)

SEMI-VOLATILE ORGANICS
EXHAUST GAS CONCENTRATIONS AND EMISSION RATES
SILO EXHAUST DUCT
ASPHALT PLANT C - CALIFORNIA

Run No.	S-MM5-2	S-MM5-4	S-MM5-5	Average
Hexachlorocyclopentadiene				
Concentration, ppbvd [a]	ND	ND	ND	ND
Emission Rate, lb/ton [b]	ND	ND	ND	ND
Hexachloroethane				
Concentration, ppbvd [a]	ND	ND	ND	ND
Emission Rate, lb/ton [b]	ND	ND	ND	ND
Hydroquinone				
Concentration, ppbvd [a]	ND	ND	ND	ND
Emission Rate, lb/ton [b]	ND	ND	ND	ND
Indeno(1,2,3-cd)pyrene				
Concentration, ppbvd [a]	ND	ND	ND	ND
Emission Rate, lb/ton [b]	ND	ND	ND	ND
Isophorone				
Concentration, ppbvd [a]	ND	ND	ND	ND
Emission Rate, lb/ton [b]	ND	ND	ND	ND
2-Methoxybenzenamine				
Concentration, ppbvd [a]	ND	ND	ND	ND
Emission Rate, lb/ton [b]	ND	ND	ND	ND
4,4'-Methyl-bis(2-chloroaniline)				
Concentration, ppbvd [a]	ND	ND	ND	ND
Emission Rate, lb/ton [b]	ND	ND	ND	ND
2-Methylnaphthalene				
Concentration, ppbvd [a]	2.54E+02	{2.87E+02}	2.85E+02	{2.75E+02}
Emission Rate, lb/ton [b]	8.30E-06	{3.33E-06}	5.43E-06	{5.69E-06}
2-Methylphenol				
Concentration, ppbvd [a]	ND	ND	ND	ND
Emission Rate, lb/ton [b]	ND	ND	ND	ND
3/4-Methylphenol				
Concentration, ppbvd [a]	ND	ND	ND	ND
Emission Rate, lb/ton [b]	ND	ND	ND	ND
Naphthalene				
Concentration, ppbvd [a]	{1.25E+02}	{2.07E+02}	{1.87E+02}	{1.73E+02}
Emission Rate, lb/ton [b]	{3.69E-06}	{2.17E-06}	{3.21E-06}	{3.02E-06}

TABLE 2.30 (Continued)

SEMI-VOLATILE ORGANICS
EXHAUST GAS CONCENTRATIONS AND EMISSION RATES
SILO EXHAUST DUCT
ASPHALT PLANT C - CALIFORNIA

Run No.	S-MM5-2	S-MM5-4	S-MM5-5	Average
2-Nitroaniline				
Concentration, ppbvd [a]	ND	ND	ND	ND
Emission Rate, lb/ton [b]	ND	ND	ND	ND
3-Nitroaniline				
Concentration, ppbvd [a]	ND	ND	ND	ND
Emission Rate, lb/ton [b]	ND	ND	ND	ND
4-Nitroaniline				
Concentration, ppbvd [a]	ND	ND	ND	ND
Emission Rate, lb/ton [b]	ND	ND	ND	ND
Nitrobenzene				
Concentration, ppbvd [a]	ND	ND	ND	ND
Emission Rate, lb/ton [b]	ND	ND	ND	ND
4-Nitrodiphenyl				
Concentration, ppbvd [a]	ND	ND	ND	ND
Emission Rate, lb/ton [b]	ND	ND	ND	ND
2-Nitrophenol				
Concentration, ppbvd [a]	ND	ND	ND	ND
Emission Rate, lb/ton [b]	ND	ND	ND	ND
4-Nitrophenol				
Concentration, ppbvd [a]	ND	ND	ND	ND
Emission Rate, lb/ton [b]	ND	ND	ND	ND
N-Nitrosodimethylamine				
Concentration, ppbvd [a]	ND	ND	ND	ND
Emission Rate, lb/ton [b]	ND	ND	ND	ND
N-Nitrosodiphenylamine				
Concentration, ppbvd [a]	ND	ND	ND	ND
Emission Rate, lb/ton [b]	ND	ND	ND	ND
N-Nitroso-di-n-propylamine				
Concentration, ppbvd [a]	ND	ND	ND	ND
Emission Rate, lb/ton [b]	ND	ND	ND	ND
N-Nitrosomorpholine				
Concentration, ppbvd [a]	ND	ND	ND	ND
Emission Rate, lb/ton [b]	ND	ND	ND	ND

TABLE 2.30 (Continued)

SEMI-VOLATILE ORGANICS
EXHAUST GAS CONCENTRATIONS AND EMISSION RATES
SILO EXHAUST DUCT
ASPHALT PLANT C - CALIFORNIA

Run No.	S-MM5-2	S-MM5-4	S-MM5-5	Average
2,2'-Oxybis(1-chloropropane)				
Concentration, ppbvd [a]	ND	ND	ND	ND
Emission Rate, lb/ton [b]	ND	ND	ND	ND
Pentachloronitrobenzene (PCNB)				
Concentration, ppbvd [a]	ND	ND	ND	ND
Emission Rate, lb/ton [b]	ND	ND	ND	ND
Pentachlorophenol				
Concentration, ppbvd [a]	ND	ND	ND	ND
Emission Rate, lb/ton [b]	ND	ND	ND	ND
Phenanthrene				
Concentration, ppbvd [a]	{5.35E+01}	{5.86E+01}	{6.19E+01}	{5.80E+01}
Emission Rate, lb/ton [b]	{2.19E-06}	{8.55E-07}	{1.48E-06}	{1.51E-06}
Phenol				
Concentration, ppbvd [a]	ND	ND	ND	ND
Emission Rate, lb/ton [b]	ND	ND	ND	ND
Pyrene				
Concentration, ppbvd [a]	ND	ND	ND	ND
Emission Rate, lb/ton [b]	ND	ND	ND	ND
o-Toluidine				
Concentration, ppbvd [a]	ND	ND	ND	ND
Emission Rate, lb/ton [b]	ND	ND	ND	ND
1,2,4-Trichlorobenzene				
Concentration, ppbvd [a]	ND	ND	ND	ND
Emission Rate, lb/ton [b]	ND	ND	ND	ND
2,4,5-Trichlorophenol				
Concentration, ppbvd [a]	ND	ND	ND	ND
Emission Rate, lb/ton [b]	ND	ND	ND	ND
2,4,6-Trichlorophenol				
Concentration, ppbvd [a]	ND	ND	ND	ND
Emission Rate, lb/ton [b]	ND	ND	ND	ND

TABLE 2.30 (Concluded)

SEMI-VOLATILE ORGANICS
EXHAUST GAS CONCENTRATIONS AND EMISSION RATES
SILO EXHAUST DUCT
ASPHALT PLANT C - CALIFORNIA

Run No.	S-MM5-2	S-MM5-4	S-MM5-5	Average
Trifluralin				
Concentration, ppbvd [a]	ND	ND	ND	ND
Emission Rate, lb/ton [b]	ND	ND	ND	ND

[a] Parts per billion by volume dry.

[b] Pounds per ton of asphalt loaded in.

ND Not Detectable - Results are below target analyte detection limit. Values are counted as zero (0) in averages.

{ } Estimate - Concentration exceeds calibration range.

( ) Results in parentheses include NDs which were averaged as zero.

TABLE 2.31

VOLATILE ORGANICS - SW-846 METHOD 0030
EMISSIONS SAMPLING AND EXHAUST GAS PARAMETERS
SILO EXHAUST DUCT
ASPHALT PLANT C - CALIFORNIA

Run No.	S-V-1	S-V-2	S-V-3	Average
Date	7/24/98	7/25/98	7/27/98	
Clock Time, 24-hr clock	0726-1014	0910-0920	0938-0943	
Total Sampling Time, minutes	30.0	10.0	5.0	15.0
Average Sampling Rate, dsLpm [a]	0.194	0.25	0.442	0.295
Total Sample Volume, dsL [b]	5.83	2.47	2.21	3.51
Average Exhaust Gas Temperature, °F [c]	235	241	229	235
Moisture, % by Volume [c]	12.8	22.5	59.4	31.6
Exhaust Gas Volumetric Flow Rate: [c]				
acfm [d]	777	780	761	773
dscfm [e]	503	445	230	393
dscmm [f]	14.2	12.6	6.52	11.1
Process Parameters				
RTFOT Results, Mass Change at 325°F, % [g]	-0.362	-0.322	-0.284	-0.322
Asphalt Temperature at Load-out, °F [h]	321	316	291	310
Asphalt Loaded per Test Period, Tons [i]	193.5	46.3	47.1	95.6

[a] Dry standard liters per minute at 68°F (20°C) and 1 atm.
[b] Dry standard liters at 68°F (20°C) and 1 atm.
[c] Data taken from concurrent SW-846 Method 0010 train.
[d] Actual cubic feet per minute at exhaust gas conditions.
[e] Dry standard cubic feet per minute at 68°F (20°C) and 1 atm.
[f] Dry standard cubic meters per minute at 68°F (20°C) and 1 atm.
[g] Rolling Thin Film Oven Test (ASTM D 2872) from Table 3.4 in Section 3.
[h] From Table 3.3 in Section 3.
[i] From Table 2.32 in Section 2.

TABLE 2.32

VOLATILE ORGANICS - SW-846 METHOD 0030
EXHAUST GAS CONCENTRATIONS AND EMISSION RATES
SILO EXHAUST DUCT
ASPHALT PLANT C - CALIFORNIA

Run No.	S-V-1	S-V-2	S-V-3	Average
Date	7/24/98	7/25/98	7/27/98	
Clock Time, 24-hr clock	0726-1014	0910-0920	0938-0943	
Tons of asphalt loaded per test period	193.5	46.3	47.1	95.6
Acetone				
Concentration, ppbvd [a]	{1.20E+02}	{3.44E+02}	{5.99E+02}	{3.54E+02}
Emission Rate, lb/ton [b]	{1.41E-06}	{4.98E-06}	{2.21E-06}	{2.87E-06}
Acrylonitrile				
Concentration, ppbvd [a]	ND	ND	ND	ND
Emission Rate, lb/ton [b]	ND	ND	ND	ND
Allyl chloride				
Concentration, ppbvd [a]	ND	ND	ND	ND
Emission Rate, lb/ton [b]	ND	ND	ND	ND
Benzene				
Concentration, ppbvd [a]	{1.60E+02}	{8.93E+01}	{2.32E+02}	{1.60E+02}
Emission Rate, lb/ton [b]	{2.53E-06}	{1.74E-06}	{1.15E-06}	{1.81E-06}
Bromodichloromethane				
Concentration, ppbvd [a]	ND	ND	ND	ND
Emission Rate, lb/ton [b]	ND	ND	ND	ND
Bromoform				
Concentration, ppbvd [a]	ND	ND	ND	ND
Emission Rate, lb/ton [b]	ND	ND	ND	ND
Bromomethane				
Concentration, ppbvd [a]	{1.32E+01}	2.33E+01	1.49E+01	{1.71E+01}
Emission Rate, lb/ton [b]	{2.54E-07}	5.51E-07	8.96E-08	{2.98E-07}
1,3-Butadiene				
Concentration, ppbvd [a]	ND	ND	ND	ND
Emission Rate, lb/ton [b]	ND	ND	ND	ND
2-Butanone				
Concentration, ppbvd [a]	ND	{1.89E+02}	{4.42E+02}	(2.10E+02)
Emission Rate, lb/ton [b]	ND	{3.40E-06}	{2.02E-06}	(1.81E-06)
Carbon disulfide				
Concentration, ppbvd [a]	ND	1.20E+02	8.16E+01	(6.73E+01)
Emission Rate, lb/ton [b]	ND	2.29E-06	3.94E-07	(8.94E-07)

TABLE 2.32 (Continued)

VOLATILE ORGANICS - SW-846 METHOD 0030
EXHAUST GAS CONCENTRATIONS AND EMISSION RATES
SILO EXHAUST DUCT
ASPHALT PLANT C - CALIFORNIA

Run No.	S-V-1	S-V-2	S-V-3	Average
Carbon tetrachloride				
Concentration, ppbvd [a]	ND	ND	ND	ND
Emission Rate, lb/ton [b]	ND	ND	ND	ND
Chlorobenzene				
Concentration, ppbvd [a]	ND	ND	ND	ND
Emission Rate, lb/ton [b]	ND	ND	ND	ND
Chloroethane				
Concentration, ppbvd [a]	ND	4.69E+01	ND	(1.56E+01)
Emission Rate, lb/ton [b]	ND	7.55E-07	ND	(2.52E-07)
Chloroform				
Concentration, ppbvd [a]	ND	ND	ND	ND
Emission Rate, lb/ton [b]	ND	ND	ND	ND
Chloromethane				
Concentration, ppbvd [a]	8.80E+01	2.23E+02	1.31E+02	1.47E+02
Emission Rate, lb/ton [b]	8.99E-07	2.80E-06	4.18E-07	1.37E-06
Cumene				
Concentration, ppbvd [a]	ND	ND	ND	ND
Emission Rate, lb/ton [b]	ND	ND	ND	ND
Dibromochloromethane				
Concentration, ppbvd [a]	ND	ND	ND	ND
Emission Rate, lb/ton [b]	ND	ND	ND	ND
1,2-Dibromoethane				
Concentration, ppbvd [a]	ND	ND	ND	ND
Emission Rate, lb/ton [b]	ND	ND	ND	ND
1,1-Dichloroethane				
Concentration, ppbvd [a]	ND	ND	ND	ND
Emission Rate, lb/ton [b]	ND	ND	ND	ND
1,2-Dichloroethane				
Concentration, ppbvd [a]	ND	ND	ND	ND
Emission Rate, lb/ton [b]	ND	ND	ND	ND
1,1-Dichloroethene				
Concentration, ppbvd [a]	ND	ND	ND	ND
Emission Rate, lb/ton [b]	ND	ND	ND	ND

TABLE 2.32 (Continued)

VOLATILE ORGANICS - SW-846 METHOD 0030
EXHAUST GAS CONCENTRATIONS AND EMISSION RATES
SILO EXHAUST DUCT
ASPHALT PLANT C - CALIFORNIA

Run No.	S-V-1	S-V-2	S-V-3	Average
cis-1,2-Dichloroethene				
Concentration, ppbvd [a]	ND	ND	ND	ND
Emission Rate, lb/ton [b]	ND	ND	ND	ND
trans-1,2-Dichloroethene				
Concentration, ppbvd [a]	ND	ND	ND	ND
Emission Rate, lb/ton [b]	ND	ND	ND	ND
1,2-Dichloropropane				
Concentration, ppbvd [a]	ND	ND	ND	ND
Emission Rate, lb/ton [b]	ND	ND	ND	ND
cis-1,3-Dichloropropene				
Concentration, ppbvd [a]	ND	ND	ND	ND
Emission Rate, lb/ton [b]	ND	ND	ND	ND
trans-1,3-Dichloropropene				
Concentration, ppbvd [a]	ND	ND	ND	ND
Emission Rate, lb/ton [b]	ND	ND	ND	ND
1,2-Epoxybutane				
Concentration, ppbvd [a]	ND	ND	ND	ND
Emission Rate, lb/ton [b]	ND	ND	ND	ND
Ethyl acrylate				
Concentration, ppbvd [a]	ND	ND	ND	ND
Emission Rate, lb/ton [b]	ND	ND	ND	ND
Ethylbenzene				
Concentration, ppbvd [a]	{1.50E+02}	{3.54E+01}	{2.78E+02}	{1.54E+02}
Emission Rate, lb/ton [b]	{3.21E-06}	{9.37E-07}	{1.87E-06}	{2.01E-06}
n-Hexane				
Concentration, ppbvd [a]	{6.50E+02}	{1.61E+02}	{6.33E+02}	{4.81E+02}
Emission Rate, lb/ton [b]	{1.13E-05}	{3.46E-06}	{3.45E-06}	{6.09E-06}
2-Hexanone				
Concentration, ppbvd [a]	ND	ND	ND	ND
Emission Rate, lb/ton [b]	ND	ND	ND	ND
Iodomethane				
Concentration, ppbvd [a]	ND	ND	ND	ND
Emission Rate, lb/ton [b]	ND	ND	ND	ND

TABLE 2.32 (Continued)

VOLATILE ORGANICS - SW-846 METHOD 0030
EXHAUST GAS CONCENTRATIONS AND EMISSION RATES
SILO EXHAUST DUCT
ASPHALT PLANT C - CALIFORNIA

Run No.	S-V-1	S-V-2	S-V-3	Average
Isooctane				
Concentration, ppbvd [a]	(3.07E+00)	{8.52E-02}	ND	(1.05E+00)
Emission Rate, lb/ton [b]	(7.09E-08)	{2.43E-09}	ND	(2.45E-08)
Methyl methacrylate				
Concentration, ppbvd [a]	ND	ND	ND	ND
Emission Rate, lb/ton [b]	ND	ND	ND	ND
Methylene chloride				
Concentration, ppbvd [a]	(2.91E-01)	{2.29E+00}	ND	(8.61E-01)
Emission Rate, lb/ton [b]	(5.01E-09)	{4.85E-08}	ND	(1.78E-08)
4-Methyl-2-pentanone				
Concentration, ppbvd [a]	ND	ND	ND	ND
Emission Rate, lb/ton [b]	ND	ND	ND	ND
MTBE				
Concentration, ppbvd [a]	no data	no data	no data	no data
Emission Rate, lb/ton [b]	no data	no data	no data	no data
Styrene				
Concentration, ppbvd [a]	(1.19E-01)	1.36E+01	5.12E+01	(2.16E+01)
Emission Rate, lb/ton [b]	(2.50E-09)	3.54E-07	3.38E-07	(2.32E-07)
1,1,2,2-Tetrachloroethane				
Concentration, ppbvd [a]	ND	ND	ND	ND
Emission Rate, lb/ton [b]	ND	ND	ND	ND
Tetrachloroethene				
Concentration, ppbvd [a]	ND	ND	ND	ND
Emission Rate, lb/ton [b]	ND	ND	ND	ND
Toluene				
Concentration, ppbvd [a]	{2.99E+02}	{8.75E+01}	{4.61E+02}	{2.82E+02}
Emission Rate, lb/ton [b]	{5.57E-06}	{2.01E-06}	{2.69E-06}	{3.42E-06}
1,1,1-Trichloroethane				
Concentration, ppbvd [a]	ND	ND	ND	ND
Emission Rate, lb/ton [b]	ND	ND	ND	ND
1,1,2-Trichloroethane				
Concentration, ppbvd [a]	ND	ND	ND	ND
Emission Rate, lb/ton [b]	ND	ND	ND	ND

TABLE 2.32 (Concluded)

VOLATILE ORGANICS - SW-846 METHOD 0030
EXHAUST GAS CONCENTRATIONS AND EMISSION RATES
SILO EXHAUST DUCT
ASPHALT PLANT C - CALIFORNIA

Run No.	S-V-1	S-V-2	S-V-3	Average
Trichloroethene				
Concentration, ppbvd [a]	ND	ND	ND	ND
Emission Rate, lb/ton [b]	ND	ND	ND	ND
Trichlorofluoromethane				
Concentration, ppbvd [a]	ND	ND	ND	ND
Emission Rate, lb/ton [b]	ND	ND	ND	ND
Vinyl acetate				
Concentration, ppbvd [a]	ND	ND	ND	ND
Emission Rate, lb/ton [b]	ND	ND	ND	ND
Vinyl bromide				
Concentration, ppbvd [a]	ND	ND	ND	ND
Emission Rate, lb/ton [b]	ND	ND	ND	ND
Vinyl chloride				
Concentration, ppbvd [a]	ND	ND	ND	ND
Emission Rate, lb/ton [b]	ND	ND	ND	ND
m-/p-Xylene				
Concentration, ppbvd [a]	{8.34E+02}	{1.93E+02}	{1.32E+03}	{7.84E+02}
Emission Rate, lb/ton [b]	{1.79E-05}	{5.12E-06}	{8.91E-06}	{1.06E-05}
o-Xylene				
Concentration, ppbvd [a]	{2.42E+02}	7.18E+01	{3.63E+02}	{2.26E+02}
Emission Rate, lb/ton [b]	{5.21E-06}	1.90E-06	{2.44E-06}	{3.18E-06}

[a] Parts per billion by volume dry.

[b] Pounds per ton of asphalt loaded in.

ND Not Detectable - Results are below target analyte detection limit. Values are counted as zero (0) in averages.

{ } Estimate - Concentration exceeds calibration range.

( ) Results in parentheses include NDs which were averaged as zero.

TABLE 2.33

ON-SITE GC/MS VOLATILE ORGANICS EXHAUST GAS CONCENTRATIONS AND EMISSION RATES WITH VOST (SW-846 METHOD 0030) COMPARISON
SILO EXHAUST DUCT
ASPHALT PLANT C, CALIFORNIA
7/25/98

Sample ID	SED-72501	SED-72502	SED-72503	SED-72504	Averages	
					GC/MS	VOST
Acquisition Time	0859	0920	0944	1003		0910-0920
Benzene						
Concentration, ppbvd[a]	40	50	50	30	42.5	89.3
Carbon Disulfide						
Concentration, ppbvd[a]	100	80	50	20	62.5	120
Ethyl Benzene						
Concentration, ppbvd[a]	50	290	290	190	205	35.4
Hexane						
Concentration, ppbvd[a]	110	ND	ND	ND	110	161
Methyl Ethyl Ketone						
Concentration, ppbvd[a]	1,460	1,400	1,690	1,090	1,410	189[b]
Toluene						
Concentration, ppbvd[a]	100	170	170	140	145	87.5
m/p-Xylene						
Concentration, ppbvd[a]	250	300	360	360	318	193
o-Xylene						
Concentration, ppbvd[a]	90	280	280	180	208	71.8

[a] Parts per billion by volume dry.

[b] Methyl Ethyl Ketone is reported as 2-Butanone in the VOST analytical results.

Note: "ND" indicates compound was below the detection limit (Not Detected). NDs were not averaged as zeroes in this table.

TABLE 2.34

PM AND MCEM DEPOSITION ESTIMATES
ASPHALT PLANT C - CALIFORNIA

Sampling Location	Estimate of Asphalt Concrete Loaded,[1,2] Tons	PM Deposition Estimate,[3] lbs/ton	CE Corrected PM Deposition Estimate,[4] lbs/ton	MCEM Deposition Estimate,[3] lbs/ton	CE Corrected MCEM Deposition Estimate,[4] lbs/ton
TED[5]	75,347	2.80E-05	4.59E-05	6.40E-07	1.05E-06
Tunnel Ceiling[6]	20,666	6.30E-05	6.30E-05	6.26E-06	6.26E-06
Silo No. 2 Exhasut Plenum[7]	4,133	1.52E-05	2.49E-05	8.34E-07	1.37E-06
TOTAL TED	-	1.06E-04	1.34E-04	7.73E-06	8.68E-06
New SED[8]	8,142	7.12E-05	-	1.12E-06	-
Old SED[9,10]	600,000	1.27E-06	-	9.28E-08	-

[1] Silo specific load-out data was not available; estimates were made for TED, New SED, Old SED, and Silo No. 2 Exhaust Plenum.

[2] Data taken from Volume 2, Appendix B.4, page 43.

[3] Data taken from Volume 1, Appendix A.4, pages 206, 207, and 208.

[4] Capture Efficiency (CE) corrections based on the three run average 90% lower confidence level CE of 61%; the Tunnel Ceiling was not corrected for CE.

[5] Deposition in the TED upstream of the TED sampling location; test plates were installed on June 28, 1998 and cleaned on July 26, 1998.

[6] Deposition on the Tunnel Ceiling downstream of Silo No. 5; Ceiling plates were installed on July 23, 1998 and removed on July 26, 1998.

[7] Deposition on the inside walls of the exhaust plenum below Silo No. 2; Box pipes were installed on July 23, 1998 and removed on July 26, 1998.

[8] Deposition in the New SED upstream of the SED sampling location; New SED was installed on July 19, 1998 and cleaned on July 26, 1998.

[9] Deposition in the Old SED; sample taken from a section of the old SED installed at Plant C start-up and removed on July 19, 1998.

[10] Total production since start-up was assumed to be 3,000,000 tons; for Silo No. 2 one fifth of 3,000,000 tons (I.e., 600,000 tons) was used.

TABLE 2.35

METEOROLOGICAL DATA SUMMARY
ASPHALT PLANT C, CALIFORNIA

Date	Time Periods	Wind Speed, MPH	Ambient Temperature Degrees C	Wind Direction, Degrees*	Ambient Relative Humidity, %
7/24/98	0646-0700	3.02	17.7	173	
	0701-0800	3.35	18.0	184	90
	0801-0812	3.98	18.1	151	
	0931-1000	3.71	22.6	228	
	1001-1100	4.05	21.3	224	
	1101-1200	6.12	23.0	233	
	1201-1300	7.63	25.2	219	60
	Average	**4.55**	**20.8**	**202**	**75**
7/25/98	0548-0559	3.23	19.1	281	
	0600-0659	2.91	19.8	218	
	0700-0759	4.12	20.1	262	77
	0800-0859	4.96	21.0	225	
	0900-0959	5.53	23.4	206	
	1000-1059	6.03	25.8	219	
	1100-1159	6.80	27.6	213	61
	1200-1259	7.74	29.3	206	
	1300-1327	9.01	29.5	204	
	Average	**5.59**	**23.9**	**226**	**69**
7/27/98	0722-0759	2.74	22.0	135	70
	0800-0859	4.27	22.7	213	
	0900-0959	6.33	26.9	231	
	1000-1059	6.13	29.1	223	
	1100-1159	6.63	31.9	219	
	1200-1202	8.00	33.9	198	
	Average	**5.68**	**27.7**	**203**	**70**

* Degrees clockwise from north (e.g. 180° = wind from the south)

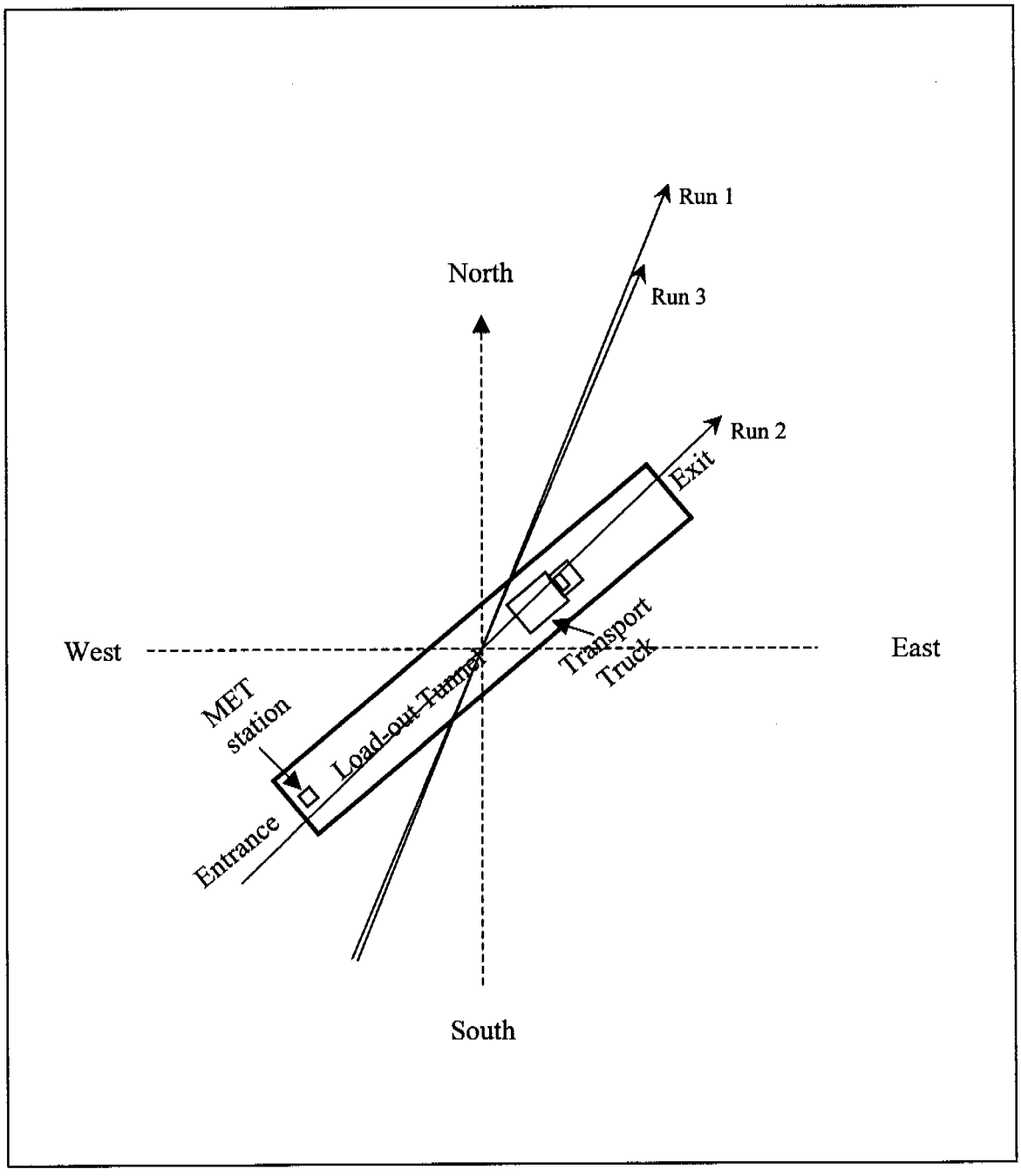

Run 1 - Average wind direction on July 24, 1998 (202°)
Run 2 - Average wind direction on July 25, 1998 (226°)
Run 3 - Average wind direction on July 27, 1998 (203°)
Run 4 - No Data for July 26, 1998

Figure 2.1 Load-out Tunnel and MET Station Location and Average Wind Direction

3.0 PROCESS DESCRIPTION

Asphalt Plant C is a hot mix asphalt plant located south of Los Angeles, California. A simplified process flow schematic is shown in Figure 3.1. The plant was built in 1994 and has a rated production capacity of 650 tons per hour (TPH) of hot mix asphalt. The plant produces five different categories of asphalt concrete, ⅜-inch, ½-inch, ¾-inch, fines, and recycled asphalt pavement (RAP). In RAP, small amounts of recycled asphalt are added to the mix. The plant also adds small amounts of rubber to some products as a crack inhibitor. The plant uses two different kinds of liquid asphalt, AR-4000 and AR-8000 (AR-4000 is used approximately 90 percent of the time). The percent weight of liquid asphalt in the mix varies from 4.8% to 6.0% depending on the size of the aggregate in the mix.

Five 200-ton heated storage silos sit on top of a load-out tunnel. The storage silos serve as a holding station between production and the loading of the asphalt concrete into transport trucks. A conveyer system carries the fresh asphalt from the secondary chamber of the dryer to the top of the silos and loads one silo at a time. When a silo becomes full or when production changes to a different mix, loading is switched to another silo. Asphalt fumes generated in the silos during load-in are vented through an exhaust system on top of the silos. Each of the five silos has its own 10 inch ID silo exhaust duct that feeds a 12 inch ID common header that carries the asphalt fumes to the TED downstream of Silo No. 1 (see Figure 3.1). Two dampers are positioned in each of the five silo exhaust ducts. During load-in, the dampers above the silo being loaded are positioned to direct load-in fumes from the silo to the common header. The dampers above the other four silos are positioned to vent the "idle" silos to atmosphere.

The load-out tunnel is approximately 183 feet long by 16 feet high by 16 feet wide. Attached to the ceiling of the load-out tunnel, and below each of the five silos, is an exhaust plenum that draws air and vapors off the transport trucks and out of the tunnel during load-out. Each of the five exhaust plenums is identical and shaped like a tuning fork with holes in the bottom and slots in the inside legs. Air and vapors from the asphalt concrete during load-out are drawn through the holes and slots and into the tunnel exhaust duct by a constant rate induced draft fan. Only one exhaust plenum is in operation at any one time. Dampers, triggered when loading begins, control the flow of air and vapors into the exhaust plenums.

During a full load-out schedule, transport trucks enter the tunnel approximately every three minutes. Single bed transport trucks hold approximately 21 tons of asphalt concrete. Dual bed transport trucks (i.e., a truck and trailer) hold approximately 25 tons. It typically takes 15 to 30 seconds to load a transport truck. Under normal operation, the temperature of the asphalt concrete is approximately 305°F as it is dropped from the storage silo into the transport truck.

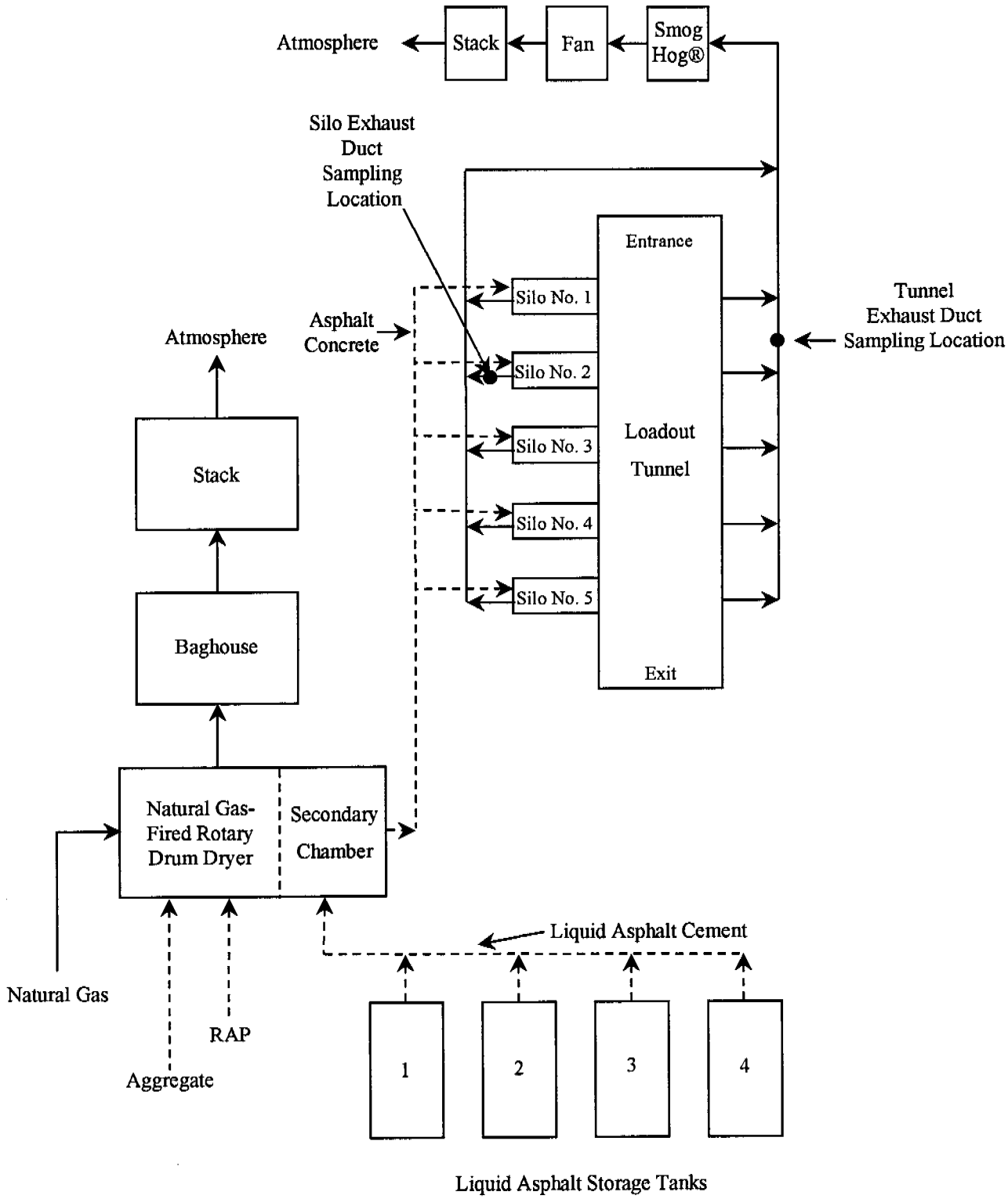

Figure 3.1 Process Flow Schematic, Asphalt Plant C, California

During normal operation, and depending on demand, the plant produces between 2,000 and 6,000 tons of asphalt concrete in a 12 hour day. The plant typically starts up at 4:00 am and produces asphalt concrete at a steady rate for 10 to 12 hours. Load-out typically begins at 6:30 am and continues for 8 to 10 hours. In addition, the plant often operates a second shift that typically starts up at 6:30 pm and runs most of the night. On a daily basis, the average load-out rate typically matches the average production rate and the storage silos begin and end each day empty.

3.1 COORDINATION BETWEEN TESTING AND PROCESS OPERATIONS

Testing in the TED was performed to characterize emissions from the load-out tunnel during the load-out of asphalt concrete from the storage silos into transport trucks. In Table 3.1, the total load-out tons of asphalt concrete are presented for each TED test run. This load-out data was used to convert the TED emissions from pounds per test period to pounds per ton of asphalt loaded. Note that asphalt concrete loaded from Silo No. 1 is not included. The sampling location in the TED was upstream of the Silo No. 1 exhaust plenum, as shown in Figure 3.1.

Under normal load-out operations, 21 to 25 tons of asphalt concrete are transferred in 15 to 30 seconds from the silo to the truck. Testing to characterize emissions from the load-out tunnel was performed only when asphalt concrete was loaded from Silos 2, 3, 4 or 5. If load-out operations were suspended on Silos 2, 3, 4 and 5 for more than 10 minutes, the TED testing was stopped.

Testing was also performed to characterize emissions from Silo No. 2 during the loading of asphalt concrete into Silo No. 2. In Table 3.2, the total load-in tons of asphalt concrete are presented for each SED test run (load-in refers to the loading of asphalt concrete into Silo No. 2). This load-in data was used to convert the SED emissions from pounds per test period to pounds per ton of asphalt loaded. The SED testing was performed only when asphalt concrete was being loaded in Silo No. 2. Testing was stopped if the loading into Silo No. 2 was stopped.

3.2 PROCESS MONITORING DURING TESTING

For the five days of testing beginning on July 24, 1998, PES monitored and recorded process operations data including plant production records, tunnel load-out data, and Silo No. 2 load-in data. PES also reviewed and recorded daily production records for plant operations from June 18, 1998 through July 23, 1998. In addition, PES measured the temperature of the asphalt concrete in randomly selected transport trucks as the trucks left the load-out tunnel. This Plant C process data is summarized below. The complete records appear in Volume 2, Appendix B.

- Production Records beginning on 7/24/98 and running through 7/28/98 - These records document plant operations and include material feed rates and temperatures, total mix rates and product codes, and process equipment parameters. The mix feed rate data were used to calculate the Silo No. 2 load-in data.

- Silo Storage Records beginning on 7/25/98 and running through 7/28/98 - These records document the type (i.e., ⅜-inch, ½-inch, ¾-inch, fines, or RAP) and amount (tons) of asphalt concrete stored in each silo during the testing. The tons of asphalt concrete in silos, recorded every 30 minutes during the testing, changed as new product was loaded in and stored product was loaded out of the silos. This data serves to document silo operations. It was not used in any emission calculations.

- Load-out Records used in TED Emission Calculations - These records summarize pertinent information from the Field Load-out Records discussed below. These records document the load-out tons used in the TED emission calculations. This data is summarized in Table 3.1.

- Load-out Records beginning on 6/18/98 and running through 7/26/98 - These records document Plant C production beginning the day the TED test plates were installed and running through the day the TED test plates were removed. This data was used to estimate PM and MCEM deposition in the TED.

- Field Load-out Records beginning on 7/24/98 and running through 7/28/98 - These records document load-out operations during the testing and include product code, product description, job name, time of loading, tons loaded, truck number, and silo number.

- Silo No. 2 Load-in Records used in SED Emission Calculations - These records estimate the load-in tons in Silo No. 2 during the SED testing. The minute-by-minute load-in tons were estimated based on the mix rate production data recorded during the SED testing (i.e., mix rates in tons per hour were converted to mix rates in ton per minute). This minute- by-minute data is summarized in Table 3.2.

- Asphalt Temperatures at Load-out beginning on 7/24/98 and running through 7/28/98 - These records document the temperature of the asphalt concrete in randomly selected transport trucks just after load-out. These temperatures were recorded with a dial thermometer inserted in the asphalt concrete in the bed of the truck shortly after the truck left the load-out tunnel. Temperature measurements were taken from nine trucks on July 24, 1998, ten trucks on July 25, 1998, and ten trucks on July 27, 1998. This data is summarized in Table 3.3.

3.3 PROCESS SAMPLES

Asphalt cement samples (i.e., hot liquid asphalt) were collected on July 24, 25, 27, and 28, 1998. On July 24, 25, and 27, 1998 three sets of samples were taken. On July 28, 1998, four sets of samples were taken. The first set of samples each day was collected near the beginning of the test run. The second set of samples and the third set of samples on July 28, 1998, were taken near the middle of the test run. The last set of samples were taken near the end of the test run. Reclaimed asphalt samples (RAP) were collected on July 25, 27, and 28, 1998 (RAP was not used on July 24, 1998).

3.3.1 Asphalt Cement Samples

Thirteen asphalt cement samples were collected following the procedures of California Transportation Method 125. Each sample was analyzed twice for volatile content at 325°F, once following the procedures of ASTM D 1754 - Effects of Heat and Air on Asphalt Materials (Thin Film Oven Test), and a second time following the procedures of ASTM D 2872 - Effects of Heat and Air on a Moving Film of Asphalt (Rolling Thin Film Oven Test). The results are presented in Table 3.4. In addition, the middle sample from each day was analyzed four more times: 1) using ASTM D 1754 with an oven temperature of 300°F, 2) using ASTM D 1754 with an oven temperature of 350°F, 3) using ASTM D 2872 with an oven temperature of 300°F, and 4) using ASTM D 2872 with an oven temperature of 350°F. The results of these analyses appear in Volume 2, Appendix B.8, beginning on page 93.

In addition, four of the asphalt cement samples (one from each day) were analyzed using the procedures of SW-846 Method 3050A, SW-846 Method 6010B, and SW-846 Method 7471 for antimony, arsenic, beryllium, cadmium, chromium, lead, manganese, nickel, selenium, cobalt, and mercury. The results are summarized in Table 3.5. Detailed analytical results appear in Volume 2, Appendix B.10, beginning on page 104.

3.3.2 RAP Samples

Eleven RAP samples were collected during the test program following the procedures of Section 5.2.1, Sampling from a Conveyor Belt, of ASTM D 979-96, Standard Practice for Sampling Bituminous Paving Mixtures. Three of the samples, one from each day, were analyzed as follows (the remaining eight samples were archived). The asphalt cement in the RAP was separated from the aggregate following the procedures of ASTM D 2172-88, Quantitative Extraction of Bitumen from Bituminous Paving Mixtures. The asphalt cement was then recovered from the extract following the procedures of ASTM D 1856-95a, Recovery of Asphalt from Solution by Abson Method. The recovered asphalt cement and the recovered aggregate were then analyzed separately using the procedures of SW-846 Method 3050A, SW-846 Method 6010B, and SW-846 Method 7471 for antimony, arsenic, beryllium, cadmium, chromium, lead, manganese, nickel, selenium, cobalt, and mercury. The results are summarized in Table 3.5. Detailed analytical results appear in Volume 2, Appendix B.10, beginning on page 104.

3.4 VELOCITY OF AIR ACROSS TOP OF TRANSPORT TRUCKS DURING LOAD-OUT

Air velocity measurements were taken above seven transport trucks inside the tunnel during load-out from Silo No. 2. Measurements were taken using a hot wire anemometer at five regularly spaced intervals just above the back end of the truck bed. In each case, a second truck was waiting at the entrance of the tunnel. The results are summarized in Table 3.6; Figure 3.2 shows the measurement locations. Detailed results appear in Volume 2, Appendix B.9, beginning on page 100.

TABLE 3.1

LOAD-OUT DATA
USED IN TED EMISSION CALCULATIONS

Test Date	Run Number	Tons of Asphalt Loaded into Trucks from Silo Nos. 2, 3, 4, and 5 During Testing
7/24/98	T-V-1-1	169.9
7/24/98	T-V-1-2	262.3
7/24/98	T-V-1-3	276.9
7/24/98	T-M315-1	1,875.0
7/24/98	T-M18-1	1,853.8
7/25/98	T-V-2-1	177.8
7/25/98	T-V-2-2	182.6
7/25/98	T-V-2-3	162.9
7/25/98	T-V-2-4	62.8
7/25/98	T-MM5-2	1,478.7
7/25/98	T-M315-2	1,499.7
7/25/98	T-M18-2	1,499.7
7/27/98	T-V-3-1	258.4
7/27/98	T-V-3-2	292.2
7/27/98	T-V-3-3	273.9
7/27/98	T-MM5-3	2,530.2
7/27/98	T-M315-3	2,529.7
7/27/98	T-M18-3	2,530.2

TABLE 3.2

LOAD-IN DATA FOR SILO NO. 2
USED IN SED EMISSION CALCULATIONS

Test Date	Run Number	Tons of Asphalt Loaded into Silo No. 2 During Testing
7/24/98	S-V-1-1	79.2
7/24/98	S-V-1-2	57.7
7/24/98	S-V-1-4	56.6
7/24/98	S-M315-1	336.7
7/24/98	S-M18-1	745.4
7/25/98	S-V-2-4	46.3
7/25/98	S-MM5-2	602.5
7/25/98	S-M315-2	282.7
7/25/98	S-M18-2	595.5
7/27/98	S-V-3-3	47.1
7/27/98	S-MM5-3	1,079.5
7/27/98	S-M18-3	472.4
7/28/98	S-MM5-4	881.0
7/28/98	S-MM5-5	709.4
7/28/98	S-M315-4	402.4

TABLE 3.3

ASPHALT TEMPERATURES AT LOAD-OUT
ASPHALT PLANT C - CALIFORNIA

Date	Run No.	Time of Reading	Truck ID	Temperature,°F
07/24/98	1	07:25	89	327
07/24/98	1	07:31	99	322
07/24/98	1	07:36	92	316
07/24/98	1	11:12	88	317
07/24/98	1	11:15	89	325
07/24/98	1	11:20	12	319
07/24/98	1	13:16	9	327
07/24/98	1	13:20	13	317
07/24/98	1	13:26	16	322
Daily Average				321
07/25/98	2	07:33	27	317
07/25/98	2	7;36	T-3	332
07/25/98	2	07:39	23	329
07/25/98	2	09:32	21	289
07/25/98	2	09:35	8	312
07/25/98	2	09:37	9	320
07/25/98	2	11:48	16	327
07/25/98	2	11:56	18	317
07/25/98	2	12:00	27	299
Daily Average				316
07/27/98	3	08:04	T-1	276
07/27/98	3	08:09	16	272
07/27/98	3	08:11	CA1138	297
07/27/98	3	09:41	27	277
07/27/98	3	09:45	T-1	292
07/27/98	3	09:55	2305-2	307
07/27/98	3	12:45	CA20119	292
07/27/98	3	12:47	O-8	309
07/27/98	3	12:51	CA21784	299
Daily Average				291
Average				310

TABLE 3.4

MASS CHANGE OF ASPHALT
ASPHALT PLANT C, CALIFORNIA

Date	Sample Time	Sample ID	Thin Film Oven Test[1]	Rolling Thin Film Oven Test[2]
			Percent Change at 325°F	Percent Change at 325°F
7/24/98	7:21 AM	AC1B	-0.175	-0.347
7/24/98	11:05 AM	AC1M	-0.178	-0.369
7/24/98	12:54 PM	AC1E	-0.196	-0.370
7/25/98	7:16 AM	AC2B	-0.182	-0.313
7/25/98	9:18 AM	AC2M	-0.173	-0.311
7/25/98	11:18 AM	AC2E	-0.186	-0.341
7/27/98	7:28 AM	AC3B	-0.146	-0.301
7/27/98	9:29 AM	AC3M	-0.166	-0.286
7/27/98	12:24 PM	AC3E	-0.150	-0.264
7/28/98	7:41 AM	AC4B	-0.141	-0.361
7/28/98	9:17 AM	AC5B	-0.157	-0.292
7/28/98	1:51 PM	AC6B	-0.095	-0.322
7/28/98	7:43 PM	AC6E	-0.237	-0.408
Average			-0.169	-0.330

[1] ASTM D1754-94 - Effects of Heat and Air on Asphalt Materials (Thin Film Oven Test).

[2] ASTM D2872-88 - Effects of Heat and Air on a Moving Film of Asphalt (Rolling Thin Film Oven Test).

TABLE 3.5

RESULTS OF METALS ANALYSES OF ASPHALT SAMPLES ASPHALT PLANT C, CALIFORNIA

Metal	Virgin Asphalt Cement	RAP Samples	
		Recovered Asphalt Cement	Recovered Aggregate
Arsenic, mg/Kg	ND	ND	4.98
Beryllium, mg/Kg	ND	ND	ND
Cadmium, mg/Kg	ND	ND	0.654
Cobalt, mg/Kg	(0.490)	(0.195)	6.49
Chromium, mg/Kg	ND	ND	13.1
Manganese, mg/Kg	(0.216)	4.28	249
Nickel, mg/Kg	17.7	16.5	8.91
Lead, mg/Kg	(0.448)	2.90	25.1
Antimony, mg/Kg	ND	ND	ND
Selenium, mg/Kg	(0.359)	(0.217)	2.26
Mercury, mg/Kg	ND	ND	(0.0252)

Note: All results shown are the average of multiple sample analyses. ND = Not detected. Values in parentheses indicate the average includes one or more NDs, which were averaged as a zero.

TABLE 3.6

AIR VELOCITY OVER TRANSPORT TRUCKS DURING LOAD-OUT ASPHALT PLANT C, CALIFORNIA

Test Date	Point No.	Time of Reading	Truck No.	Velocity Reading, fpm [a]
07/24/98	1	1209	29	60
07/24/98	2	1209	29	52
07/24/98	3	1209	29	59
07/24/98	4	1213	16	271
07/24/98	5	1213	16	220
07/24/98	1	1219	TP	71
07/24/98	2	1219	TP	21
07/24/98	3	1216	88	140
07/24/98	4	1216	88	135
07/24/98	5	1216	88	170
07/25/98	1	1209	21	104
07/25/98	2	1209	21	135
07/25/98	3	1211	7	136
07/25/98	4	1211	7	123
07/25/98	5	1211	7	72
07/25/98	1	1220	15	43
07/25/98	2	1220	15	41
07/25/98	3	1215	8	64
07/25/98	4	1215	8	55
07/25/98	5	1215	8	71
Average				102

[a] Feet per minute.

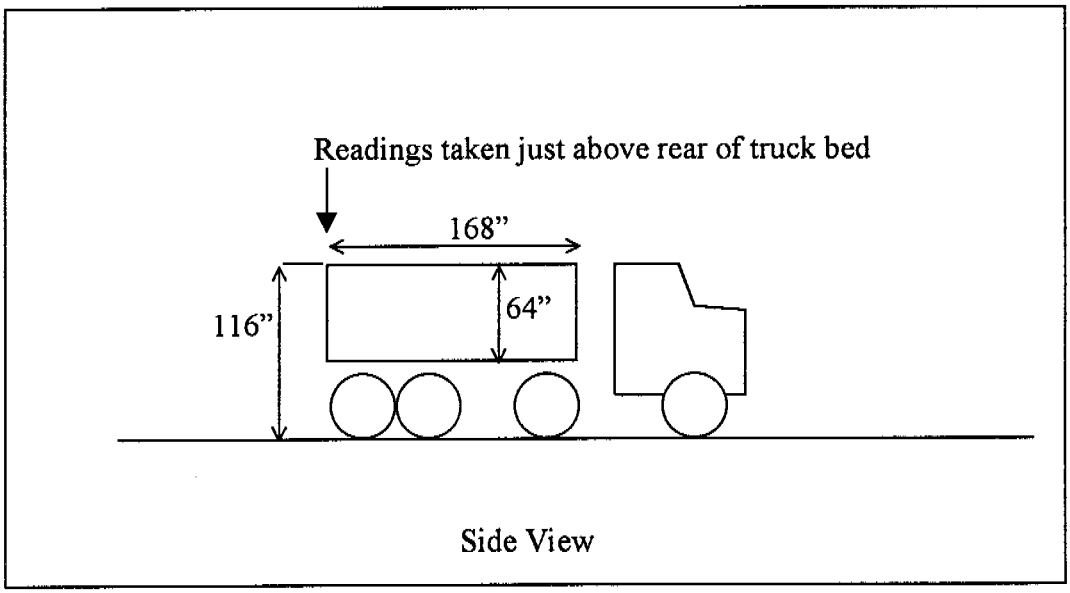

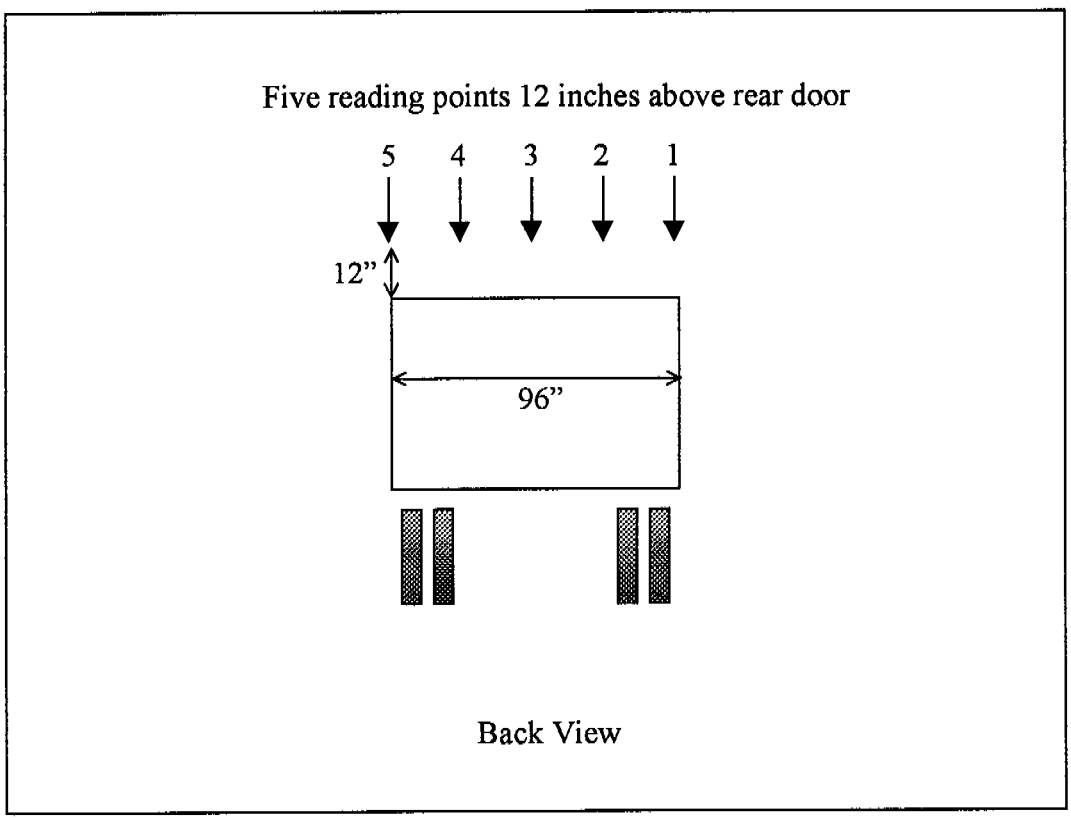

Figure 3.2 Velocity Measurement Locations and Dimensions of Transport Trucks

4.0 SAMPLING LOCATIONS

Source sampling was performed in the tunnel exhaust duct upstream of Silo No. 1 and in the exhaust duct off Silo No. 2 as shown in Figure 3.1 of Section 3.0. EPA Method 1, Section 2.1 states: "Sampling and velocity measurement is performed at a site located at least eight duct diameters downstream and two diameters upstream from any flow disturbance. If necessary, an alternative location may be selected, at a position at least two duct diameters downstream and a half diameter upstream of any flow disturbance". Note that at both locations the 8 and 2 criteria were not met but the alternative 2 and ½ criteria were met. Also note that at both locations, the absence of non-parallel flow was confirmed following the procedures of Section 2.4 of EPA Method 1. Brief descriptions and schematic diagrams of the sampling locations are presented below.

4.1 TUNNEL EXHAUST DUCT

The tunnel exhaust duct is a horizontal 32-inch inside diameter (ID) duct and serves as a common manifold for exhausting the five silos from the load-out tunnel. Sampling ports were installed upstream of the duct breaching from Silo No.1 as shown in Figure 4.1. For isokinetic testing, a 24-point traverse matrix consisting of 12 traverse points on each of 2 perpendicular traverse lines was used. For non-isokinetic sampling, a single sampling point near the center of the duct was used. The results of the EPA Method 1 calculations and the locations of the traverse points are presented in Figure 4.2.

Prior to testing, the TED was checked for the presence of non-parallel flow by recording yaw angle misalignment at each isokinetic sampling point as specified in Section 2.4 of EPA Method 1. The average yaw angle was found to be 1°, which is well below the maximum EPA requirement of 20°.

4.2 SILO EXHAUST DUCT

Fumes from Silo No. 2 exhaust through a 24-inch ID duct to a 10-inch ID duct and then to a 12-inch ID common header that transfers the fumes from Silo No. 2 to the Smog Hog®. The original 10-inch ID duct was removed and replaced with the new 10-inch ID duct shown in Figure 4.3. Sampling was performed in this new section. For isokinetic testing, a 24-point traverse matrix consisting of 12 traverse points on each of two perpendicular traverse lines was used. For non-isokinetic sampling, a single sampling point near the center of the duct was used. The results of the EPA Method 1A calculations and the locations of the traverse points are presented in Figure 4.4.

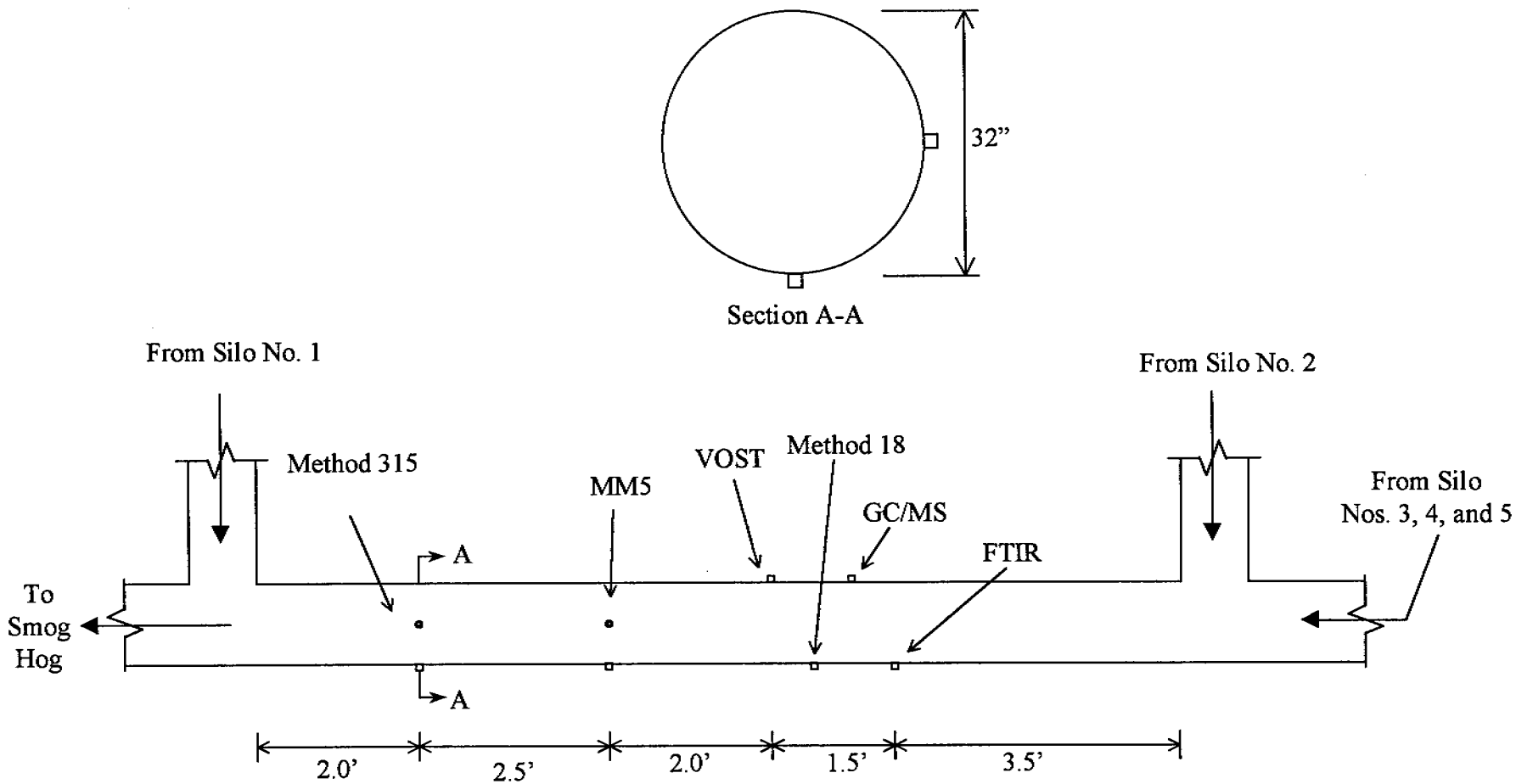

Figure 4.1 Tunnel Exhaust Duct Sampling Locations, Asphalt Plant C, California

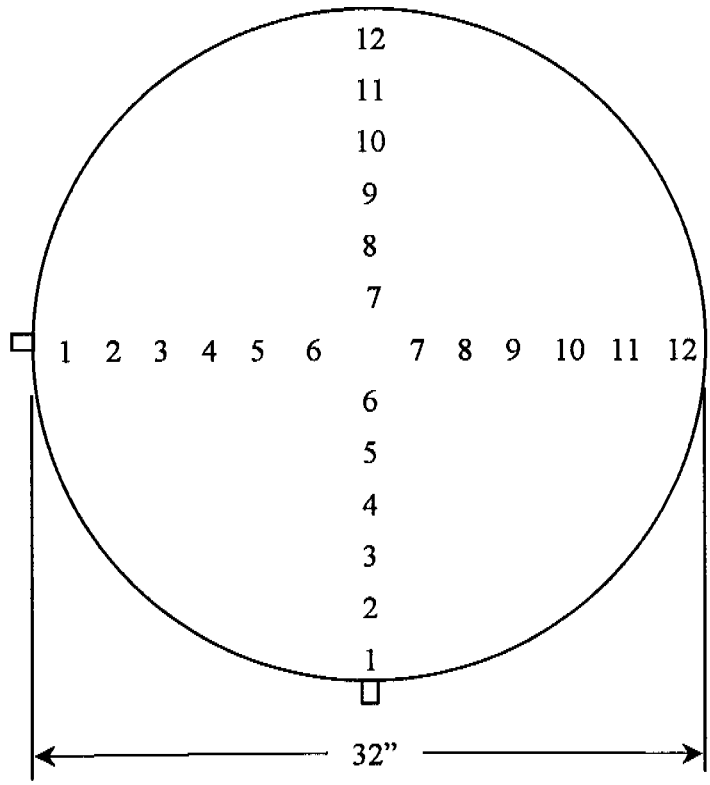

Traverse Point Number	Distance from Wall, inches
1	0.7
2	2.1
3	3.8
4	5.7
5	8.0
6	11.4
7	20.6
8	24.0
9	26.3
10	28.2
11	29.9
12	31.3

Figure 4.2 Tunnel Exhaust Duct Traverse Point Locations, Asphalt Plant C, California

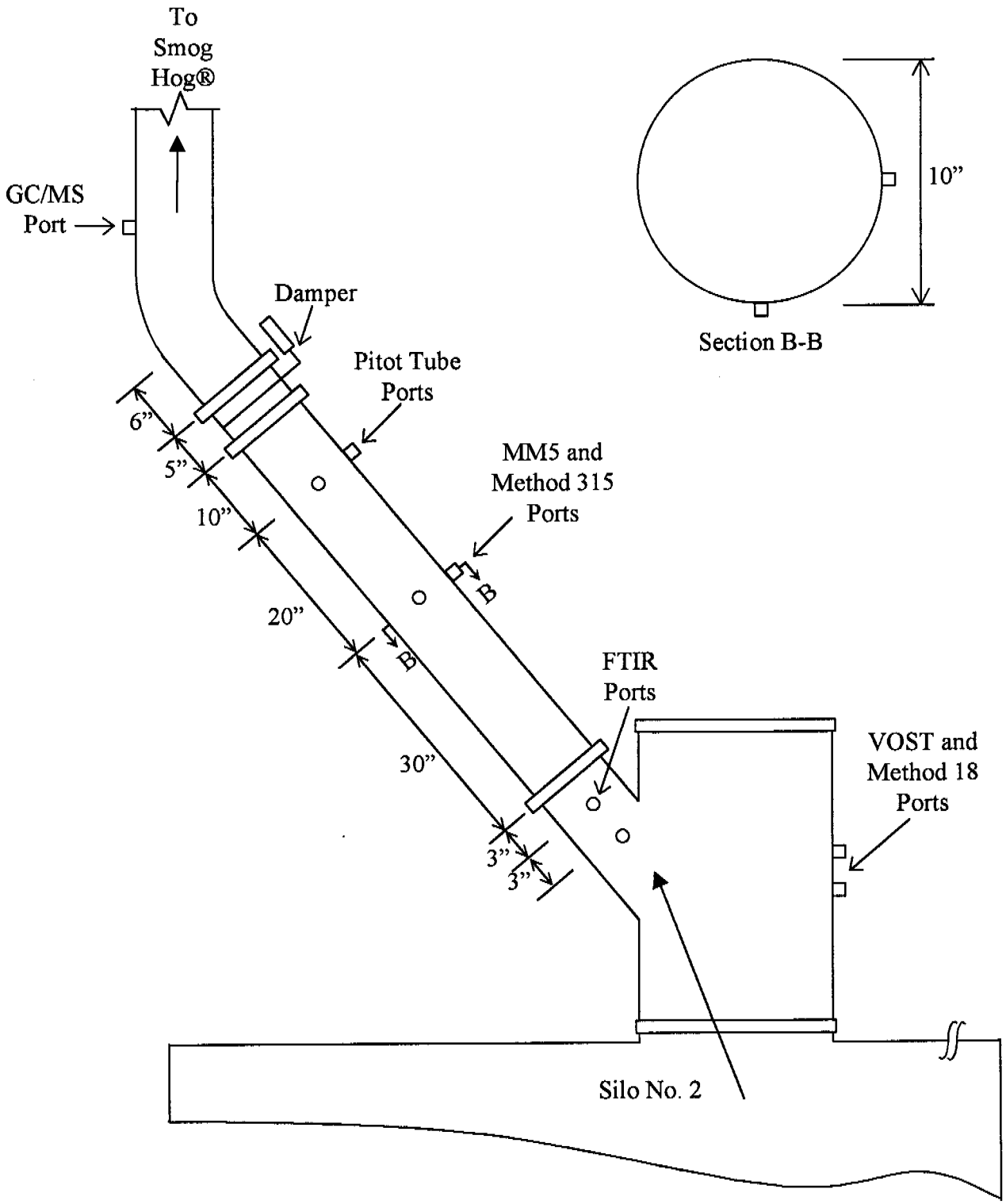

Figure 4.3 Silo Exhaust Duct Sampling Locations, Asphalt Plant C, California

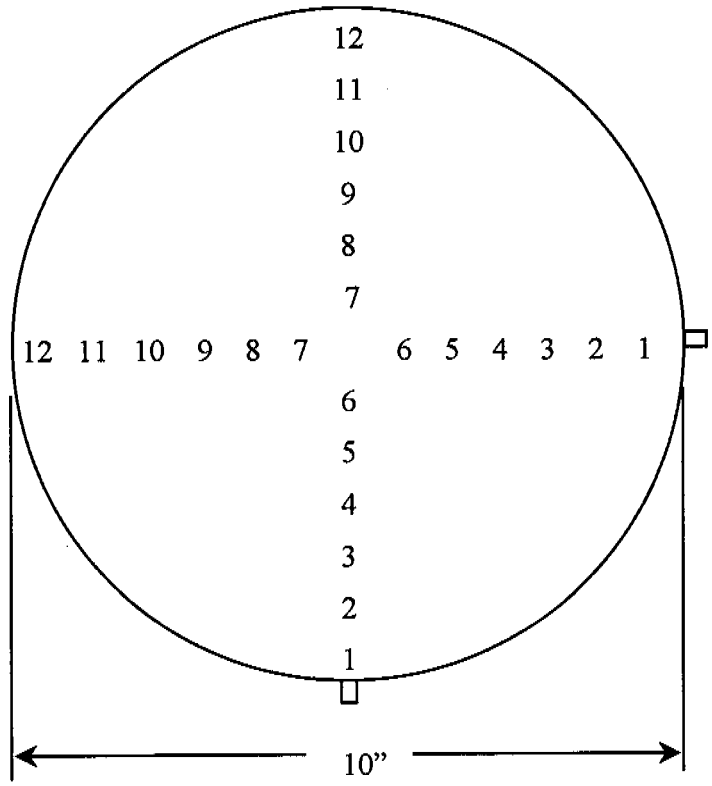

Traverse Point Number	Distance from Wall, inches
1	0.5
2	0.7
3	1.2
4	1.8
5	2.5
6	3.6
7	6.4
8	7.5
9	8.2
10	8.8
11	9.3
12	9.5

Figure 4.4 Silo Exhaust Duct Traverse Point Locations, Asphalt Plant C, California

Prior to testing, the SED was checked for the presence of non-parallel flow by recording yaw angle misalignment at each isokinetic sampling point as specified in Section 2.4 of Method 1. The average yaw angle was found to be <1°, which is well below the maximum EPA requirement of 20°.

5.0 SAMPLING AND ANALYTICAL PROCEDURES

Source sampling was performed in the TED and SED to determine the concentrations and mass emission rates of PM, MCEM, and organic HAPs. Four tests at the TED and three tests at the SED were performed over five consecutive days beginning on July 24, 1998. The sampling and analysis methods that were used are summarized in Table 5.1. Brief descriptions of the sampling and analysis procedures used are presented below. Copies of all the methods which were used are presented in Volume, Appendix F.

5.1 LOCATION OF MEASUREMENT SITES AND SAMPLE/VELOCITY TRAVERSE POINTS

EPA Method 1, "Sample and Velocity Traverses for Stationary Sources," was used to position velocity and sample traverse point locations at the TED. EPA Method 1A, "Sample and Velocity Traverses for Stationary Sources with Small Stacks or Ducts," was used to position velocity and sample traverse point locations at the SED. Note that a small diameter S-type pitot tube was used instead of the standard pitot tube specified in Method 1A due to space constraints at the SED. Also note that this modification was approved by EPA prior to the testing and had no impact on the results. The process ductwork and the locations of measurement sites and traverse points were discussed in Section 4.0 of this document.

5.2 DETERMINATION OF EXHAUST GAS VOLUMETRIC FLOW RATE

EPA Method 2, "Determination of Stack Gas Velocity and Volumetric Flow Rate (Type S Pitot Tube)," was used to determine exhaust gas velocity. A Type S Pitot tube, constructed according to Method 2 criteria and having an assigned coefficient of 0.84, was connected to an inclined-vertical manometer. The pitot tube was inserted into the duct and the velocity pressure (delta p) was recorded at each traverse point. The effluent gas temperature was also recorded at each traverse point using a Type-K thermocouple. The average exhaust gas velocity was calculated from the average square roots of the velocity pressures, average exhaust gas temperature, exhaust gas molecular weight, and absolute stack pressure. The volumetric air flow rate was calculated as the product of average velocity and the cross-sectional area of the duct at the sampling location.

TABLE 5.1

SUMMARY OF SAMPLING AND ANALYTICAL METHODS
ASPHALT PLANT C, CALIFORNIA

Sampling Location	Parameter	Test Methods	Net Run Times, Minutes
TED	Air Flow Rate	EPA 1 & 2	240
	Moisture	EPA 4	240
	PM/MCEM	EPA Method 315	240
	VOHAPs	SW-846-0030 EPA 18 EPA CTM-028	20-35 240 5-15
	SVOHAPs	SW-846 0010	240
SED	Air Flow Rate	EPA 1, 1A, & 2	60-120
	Moisture	EPA 4	60-120
	PM/MCEM	EPA Method 315	60
	VOHAPs	SW-846-0030 EPA 18 On-Site GC/MS	5-10 50-120 5-15
	SVOHAPs	SW-846 0010	120

5.3 DETERMINATION OF EXHAUST GAS DRY MOLECULAR WEIGHT

The exhaust gas drawn from the TED and SED during load out was essentially ambient air with trace levels of PM, MCEM, and organic HAPs. Correspondingly, the exhaust gases were assigned the dry molecular weight of ambient air (28.84 grams per gram-mol).

5.4 DETERMINATION OF EXHAUST GAS MOISTURE CONTENT

EPA Method 4, "Determination of Moisture Content in Stack Gases," was used to determine the flue gas moisture content. EPA Method 4 was performed in conjunction with each EPA Method 315 and SW-846 Method 0010 test run. Integrated, multi-point, isokinetic sampling was performed. Condensed moisture was determined by recording pre-test and post-test weights of the impingers, reagents, and silica gel. Condensed moisture in the XAD®-2 sorbent trap from the SW-846 Method 0010 sample train was also determined gravimetrically and the results included in the moisture content calculations.

5.5 DETERMINATION OF PM AND MCEM

EPA Method 315, "Determination of Filterable Particulate Matter (PM) and Methylene Chloride Extractable Matter (MCEM) Emissions from Stationary Sources," was used to collect PM and MCEM samples in the TED and SED. Multi-point integrated samples were extracted isokinetically from each of the 24 traverse points at both locations. Each point was sampled for 10 minutes at the TED, for a net run time of 240 minutes. Each point was sampled for 2.5 minutes at the SED, for net run times of 60 minutes.

The Method 315 samples were extracted from the sampling locations through a glass nozzle, a heated glass-lined probe, a heated glass fiber filter, and a series of chilled impingers. The first and second impinger each contained 100 milliliters (mL) of deionized (DI) water. The third impinger remained empty. The fourth and final impinger contained 200 grams of silica gel. A schematic of the EPA Method 315 sampling train is shown in Figure 5.1.

The samples were analyzed according to EPA Method 315. Each component of the front half of the sample train was dried and weighed to give particulate matter results. All components were then extracted with methylene chloride to give MCEM results.

5.6 DETERMINATION OF VOHAPS

Two test methods were used to quantify VOHAPs. SW-846 Method 0030 in combination with SW-846 Method 8260B (referred to as VOST) was used to quantify a majority of the targeted compounds. EPA Method 18 was used in a backup capacity to quantify benzene, cumene, ethylbenzene, hexane, toluene, o-xylene, m-xylene, and p-xylene. In addition, a third

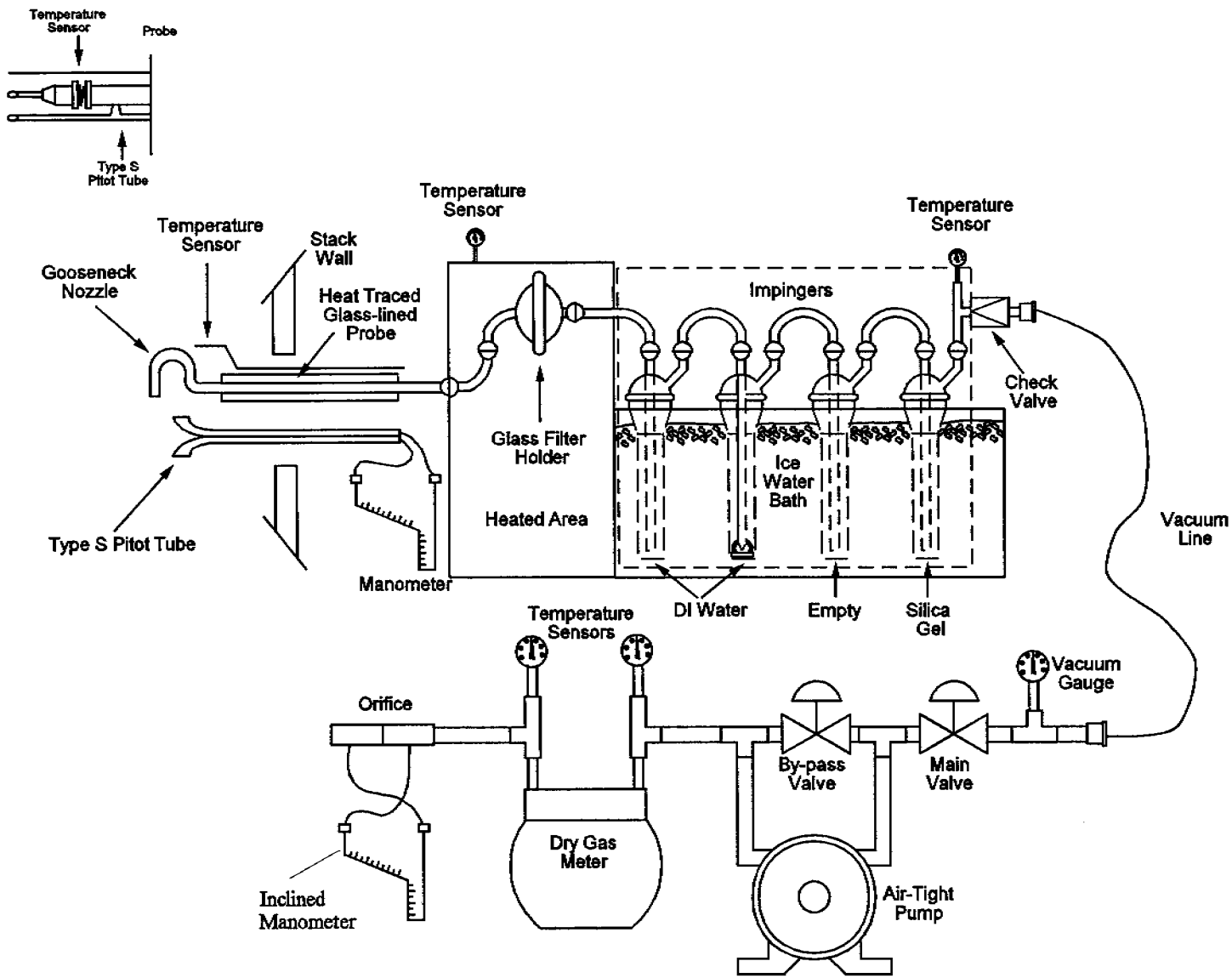

Figure 5.1 EPA Method 315 Sampling Train Schematic

method using a direct interface GC/MS procedure was used as an on-site screening tool and QC check for selected VOHAPs.

5.6.1 SW-846 Method 0030 (VOST)

SW-846 Method 0030 (VOST) was used to collect VOHAPs at the SED and TED. A single-point integrated sample was extracted at a constant rate at a point near the center of the duct. The sample was drawn through a heated glass-lined probe, a condenser, a Tenax® tube, a condensate trap and a Tenax® /charcoal tube. A schematic of the VOST sampling train is shown in Figure 5.2. Four pairs of tubes were collected during each run, except during the third run at the TED, in which three pairs of tubes were collected and during the third run at the SED, in which six pairs of tubes were collected. Sample times varied from 5 to 35 minutes and sample volume from 1.7 to 23.5 liters. Sampling was performed over the 240-minute test period at the TED.

Analysis was performed by thermal desorption purge-and-trap (SW-846 Method 5040) and high resolution gas chromatography/low resolution mass spectrometry (SW-846 Method 8260B). For test sets S-V-1-1, S-V-1-4, S-V-2-4, S-V-3-3, T-V-4-1, T-V-4-2, and T-V-4-4, each tube was analyzed separately. For all other samples, each pair of tubes, the front Tenax® tube and the back Tenax®/charcoal tube, were thermally desorbed and analyzed together as one sample. Refer to Section 2.0 for a discussion of the problems encountered during the analyses.

5.6.2 EPA Method 18

EPA Method 18, "Measurement of Gaseous Organic Compound Emissions by Gas Chromatography" (Adsorption Tube Procedure), was used to collect and analyze for selected VOHAPs at the TED and SED. The target VOHAPs were benzene, cumene, ethylbenzene, hexane, toluene, o-xylene, m-xylene, and p-xylene. At both locations, two sampling trains were run in parallel. Each train consisted of a Teflon® probe and sample line, two adsorbent tubes in series, a rotameter, a critical orifice, a vacuum gauge, and a pump. The adsorbent tubes were 1000 mg SKC Anasorb® 747 activated-polymer tubes. Pre-spiked adsorbent tubes (spiked in the field just prior to sampling) were used in one train and non-spiked adsorbent tubes were used in the second train. A single-point, integrated sample was drawn through each train at a constant rate of approximately one liter per minute. Each test at the TED was 240 minutes in duration. Each test at the SED was 120 minutes in duration, except for run S-M18-3 which was 50 minutes in duration. Analysis was performed using gas chromatography techniques coupled with a flame ionization detector (GC/FID). Due to the problems discussed in Section 2.2.5, additional analysis of the SED samples was performed using GC/MS.

5.6.3 EPA CTM - 028

A portable, direct interface GC/MS was used as an on-site screening tool for the measurement of selected VOHAPs. As a screening tool, the GC/MS was moved around the facility at the discretion of the PES Project Manager and EPA Work Assignment Manager. It was used to measure concentrations of specific VOHAPs in and around the load-out tunnel

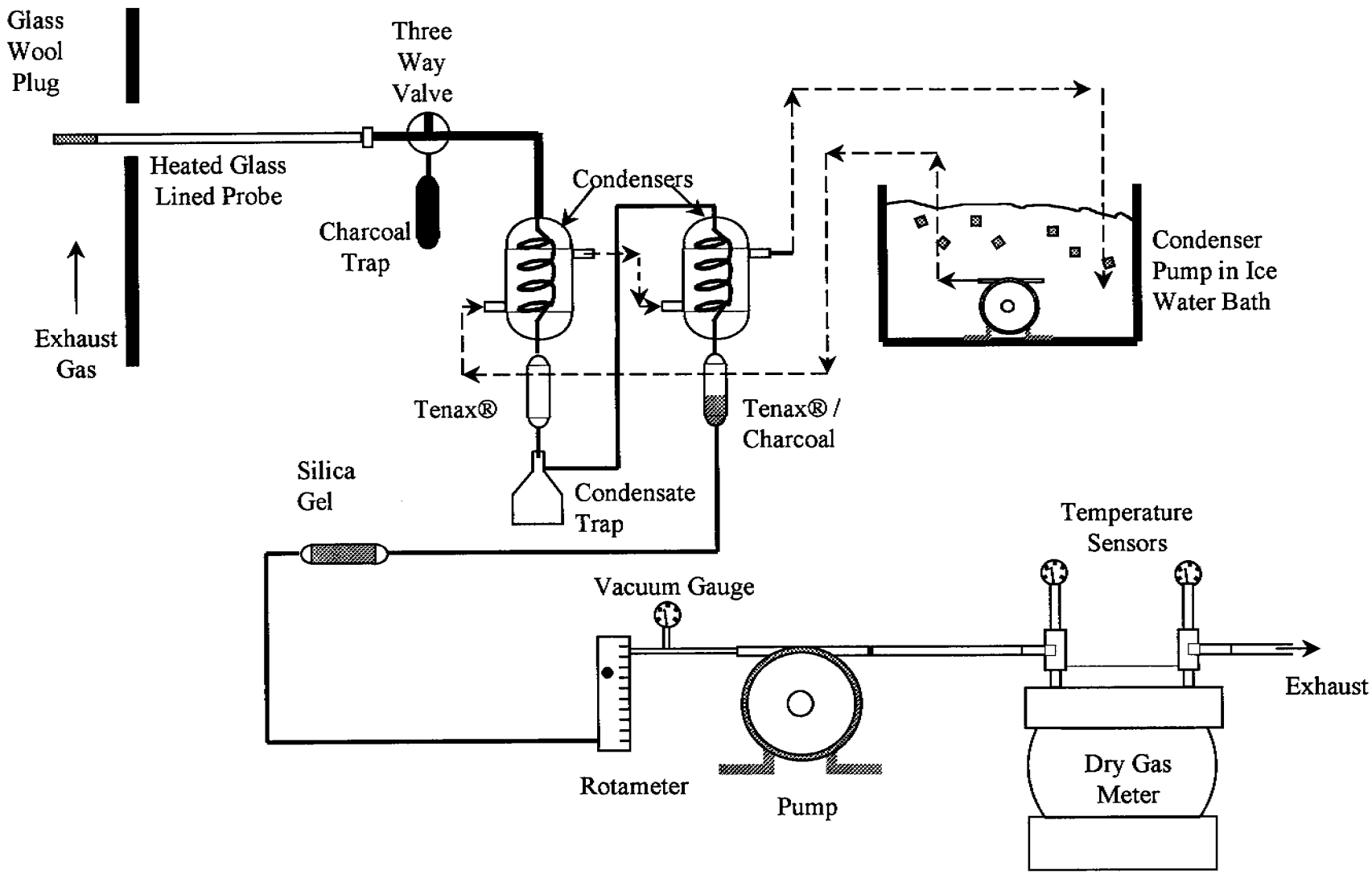

Figure 5.2 SW-846 Method 0030 Sampling Train Schematic

before, during, and after selected load-outs. It was also used to periodically measure concentrations of specific VOHAPs in the SED and TED. The sampling and analytical procedures are described in detail in the EMI Report in Volume 3, Appendix C.4, beginning on page 118.

5.7 DETERMINATION OF SVOHAPS

SW-846 Method 0010, "Modified Method 5 Sampling Train (MM5)," was used to collect SVOHAPs at both locations. A multi-point integrated sample was extracted isokinetically from the 24 traverse points in the TED and the SED. At the TED, each traverse point was sampled for 10 minutes for a net run time of 240 minutes. At the SED, each traverse point was sampled for 5 minutes for a net run time of 120 minutes. Readings were taken every 5 minutes at both test locations during each run. The SW-846 Method 0010 samples were drawn through a glass nozzle, a heated glass-lined probe, a pre-cleaned and heated glass fiber filter, a water-cooled condenser coil, and a sorbent trap containing approximately 40 g of XAD®-2 sorbent resin. A schematic of the SW-846 Method 0010 sampling train is shown in Figure 5.3.

The MM5 samples were extracted following the procedure of SW-846 Method 3542, dated January 1995. The sample extracts were analyzed two ways: 1) in accordance with the guidelines of SW-846 Method 8270C by high resolution gas chromatograph/low resolution mass spectrometer (HCGC/LRMS) for SVOHAPs, and 2) in accordance with the guidelines of CARB Method 429 by high resolution gas chromatograph/high resolution mass spectrometer (HRGC/HRMS) for PAHs. The three sample fractions for each test run, i.e., front half extract, the back half extract (XAD®-2 and back half rinse), and the condensate extract, were combined for analysis.

5.8 DETERMINATION OF WIND SPEED, WIND DIRECTION, AMBIENT TEMPERATURE, AND AMBIENT HUMIDITY

A meteorological (MET) monitoring station was positioned on top of the tunnel at the entrance end of the tunnel, and was used to monitor wind speed, wind direction, and ambient temperature. The station was operated according to the manufacturer's specifications. Readings were recorded using a data acquisition system. In addition, ambient humidity was measured using a sling psychrometer once per test run.

5.9 ESTIMATE OF PM AND MCEM ON THE CEILING OF THE LOAD-OUT TUNNEL DOWNSTREAM OF SILO NO. 5

The ceiling downstream of Silo No. 5 was divided into three equal sections. One test plate was installed in the center of each section at the beginning of the test program. The plates were positioned against the ceiling. Prior to installation, the test plates were cleaned with acetone. At the end of the test program, the test plates were removed and cleaned again with

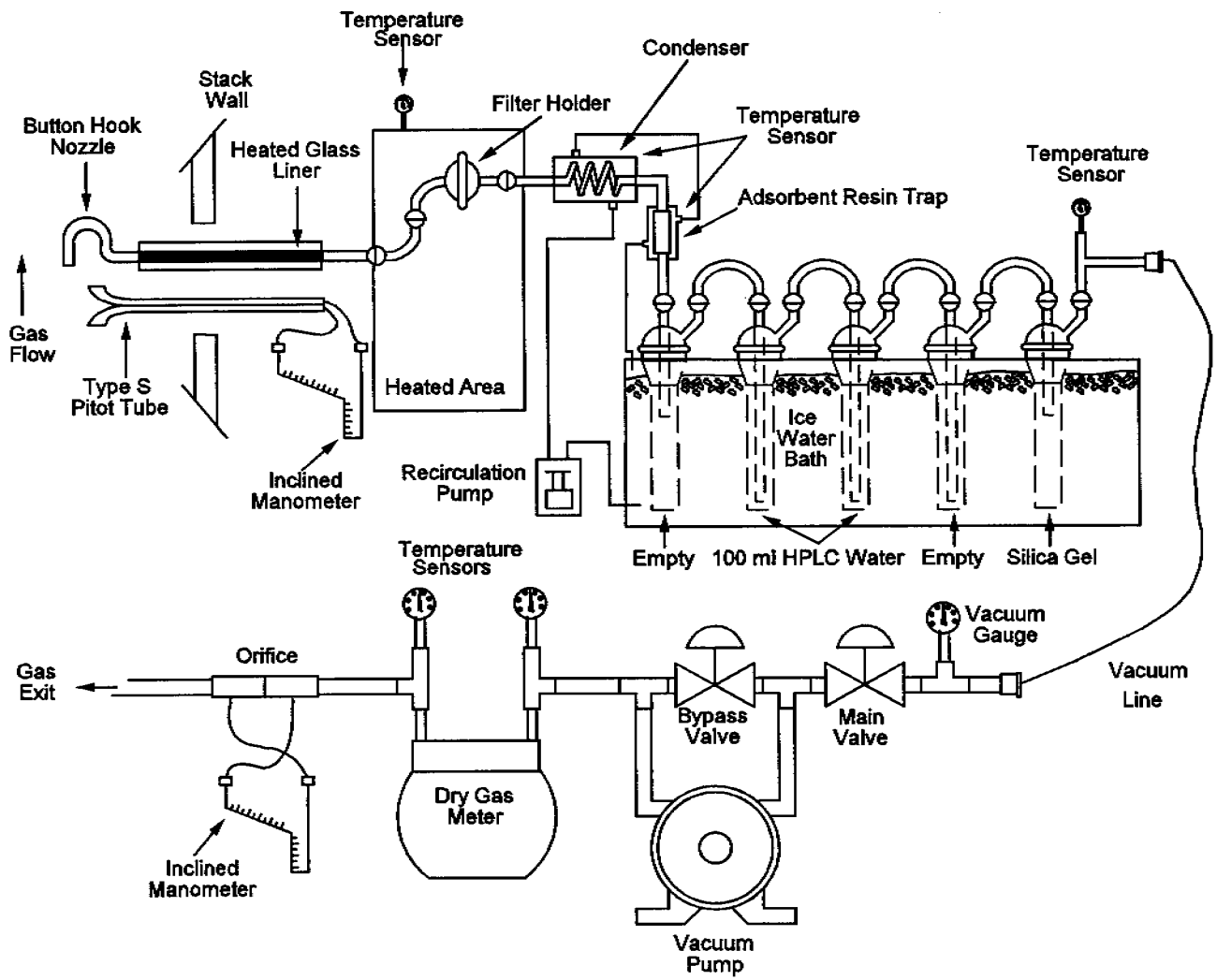

Figure 5.3 SW-846 Method 0010 Sampling Train Schematic

acetone. This procedure resulted in three acetone rinse samples. The total PM and MCEM in the rinses were determined gravimetrically following the procedures of EPA Method 315.

PM and MCEM deposition on each ceiling section was estimated by multiplying the sample catches from the Method 315 analysis by the ratio of the ceiling section surface area to the test plate surface area. Total deposition on the ceiling downstream of Silo No. 5 was calculated as the sum of the deposition on each of the three sections. A log was kept of all load-out operations from the time the test plates were installed until the test plates were removed. This data, along with the deposition data described above were used to calculate deposition per ton of load-out asphalt.

5.10 ESTIMATE OF PM AND MCEM DEPOSITION ON THE INSIDE WALLS OF THE SILO NO. 2 EXHAUST PLENUM

Above each of the five silos is a tuning fork-shaped exhaust plenum. Asphalt fumes from load-out operations exit the load-out tunnel through the exhaust plenums and into the TED. The five exhaust plenums are identical. On each plenum there are six 8-inch round holes in the bottom face and four 4x12-inch rectangular holes on the sides. Asphalt fumes from load-out operations enter the exhaust plenums through these holes.

At the beginning of the test program, six pieces of box pipe (i.e., square cross section steel tubing), each measuring 3x3x6 inches long were placed inside the exhaust plenum under Silo No. 2. One box pipe was placed just downstream of each of the six 8-inch round holes in the bottom face of the plenum. Prior to installation, the box pipes and the installation sections of the exhaust plenum were cleaned with acetone. At the end of the test program, the box pipes were removed and cleaned again with acetone. This procedure resulted in six acetone rinse samples. The PM and MCEM in the rinses were determined gravimetrically following the procedures of EPA Method 315. Deposition on the inside walls of the Silo No. 2 exhaust plenum was estimated by multiplying the sample catches from the EPA Method 315 analyses by the ratio of the exhaust plenum surface and to the box pipes surface area. An estimate was made of all load-out operations from Silo No. 2 while the box pipes were in place. This data, along with the deposition data described above, was used to calculate deposition per ton of load-out asphalt.

5.11 ESTIMATE OF PM AND MCEM DEPOSITION ON THE INSIDE WALLS OF THE SILO EXHAUST DUCT

Two SED deposition samples were collected and analyzed (one called the new SED and one called the old SED). Just prior to the testing, a section of the old SED (i.e., the original silo exhaust duct above Silo No. 2 installed when the plant was built), was removed and a new section installed. In the new SED, sampling ports were installed as shown in Figure 4.3. Prior to installation, the inside walls of the new SED were cleaned with acetone. After the testing, a large section of the inside walls of the new SED was cleaned again with acetone. This procedure resulted in one acetone rinse sample. The total PM and MCEM in the rinse were determined

gravimetrically following the procedures of EPA Method 315. Deposition on the inside walls of the new SED was estimated by multiplying the sample catches from the Method 315 analyses by the ratio of the total surface area of the SED upstream of the sampling ports to the surface area of the cleaned section. An estimate was made of all load-in operations into Silo No. 2 between cleanings. These data, along with the deposition data described above, were used to calculate deposition per ton of load-in asphalt in the new SED.

For the old SED sample, a portion of the old SED was cleaned with acetone and analyzed as described above. An estimate was made of all load-in operations into Silo No. 2 from start-up until the old SED was removed. This estimate, along with the sample catches from the Method 315 analysis, were used to calculate deposition per ton of load-in asphalt in the old SED.

5.12 ESTIMATE OF PM AND MCEM DEPOSITION ON THE INSIDE WALLS OF THE TUNNEL EXHAUST DUCT

The tunnel exhaust duct is a 32-inch diameter common manifold duct that leads from the load-out tunnel to the Smog Hog®, as shown in Figure 3.1. Before the test program, the middle section of the tunnel exhaust duct adjacent to Silo No. 3 was removed, cleaned, and test plates (T_1, T_2 and T_3) installed at the three locations shown in Figure 5.4. The original plan called for T_3 to serve as an impaction plate and T_1, and T_2 to serve as non-impaction plates. During the testing however, Silo No. 3 saw limited use, minimizing the impaction deposition on T_3. Therefore, for the deposition calculations discussed below, the three test plates were essentially treated as one large non-impaction plate. Prior to installation, the test plates were cleaned with acetone. After the test program, the test plates were removed and cleaned again with acetone. This procedure resulted in three acetone rinse samples. The total PM and MCEM in the rinses was determined gravimetrically following the procedures of EPA Method 315. PM and MCEM deposition in the TED upstream of the sampling location were estimated by multiplying the sample catches by the ratio of the TED surface area upstream of the TED sampling location to the test places surface area. An estimate was made of the total load-out tons from Silos 2, 3, 4 and 5 from the time the test plates were installed until the test plates were removed. This data, along with the sample catches were used to calculate the total deposition per ton of load-out asphalt. Start-up procedures include a brief period when dry aggregate, absent of liquid asphalt, is run through the entire plant and loaded in a silo. This is done to insure that the aggregate is up to temperature before liquid asphalt is added to the mix. At the end of this brief start-up period the dry aggregate in the silo is loaded in a truck and returned to the aggregate stockpile. At start-up this dry aggregate generates a lot of ambient dust that is drawn off the tunnel through the TED.

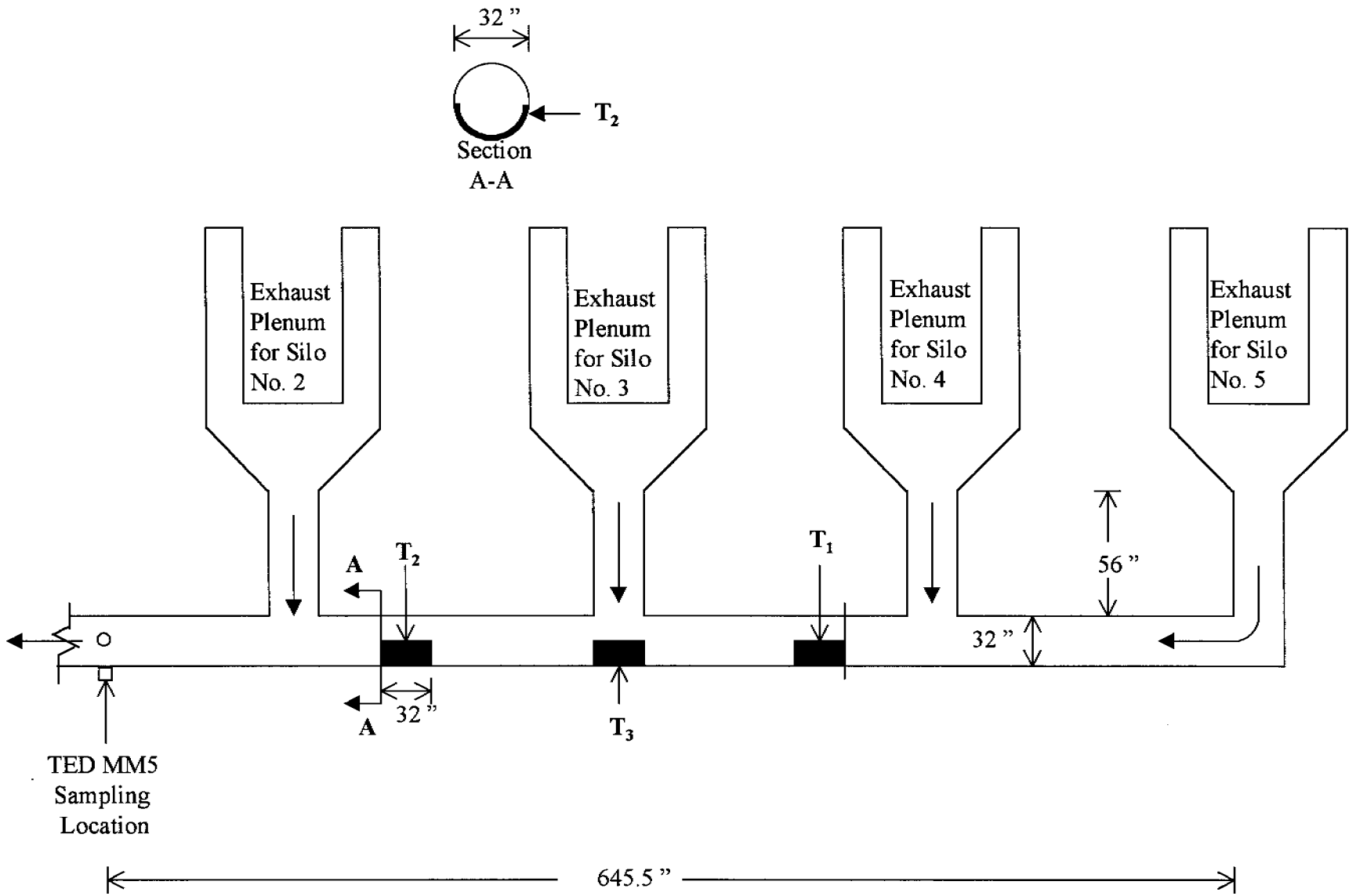

Figure 5.4 Location of TED Deposition Test Plates T_1,T_2, and T_3

6.0 QUALITY ASSURANCE/QUALITY CONTROL (QA/QC) PROCEDURES AND RESULTS

For any environmental measurement, a degree of uncertainty exists in the data generated due to the inherent limitations of the measurement system employed. The goals of a QA/QC program are to ensure, to the highest degree possible, the accuracy of the data collected. This section summarizes the QA/QC procedures that were employed by PES in the performance of this test program. The procedures contained in the reference test methods and in the Quality Assurance Handbook for Air Pollution Measurement Systems, Volume III, Stationary Source Specific Methods, EPA/600/R-94/038c, served as the basis for performance for all testing and related work activities in this project.

6.1 CALIBRATION AND PREPARATION OF APPARATUS

Brief descriptions of the calibration procedures used by PES are presented below. Detailed results of equipment and sensor calibrations may be found in Volume 3, Appendix D, beginning on page 230.

6.1.1 Barometers

PES used aneroid barometers which were calibrated against a station pressure reported by a nearby National Weather Service Station and corrected for elevation.

6.1.2 Temperature Sensors

Bimetallic dial thermometers and Type K thermocouples were calibrated using the procedure described in EPA/600/R-94/038c. Each temperature sensor was checked over the expected range of use against an ASTM 3C or 3F thermometer. Digital thermocouple displays were calibrated using a thermocouple simulator having a range of 0-2400°F. Table 6.1 summarizes the type of calibration checks performed, the acceptable levels of variance, and the results. All the dial thermometers and thermocouples used met the variance (i.e., tolerance) levels in the method.

6.1.3 Pitot Tubes

PES used Type S pitot tubes that were constructed and calibrated according to geometric specifications of EPA Method 2 and were assigned a pitot coefficient (C_p) of 0.84. The dimensional criteria results for each pitot tube used are presented in Table 6.2.

6.1.4 Differential Pressure Gauges

PES used Dwyer inclined/vertical manometers to measure differential pressures. The differential pressure measurements included velocity pressure, static pressure, and meter orifice pressure. Manometers were selected with sufficient sensitivity to accurately measure pressures over the entire range of observed values. Manometers are primary standards and require no calibration.

6.1.5 Dry Gas Meters and Orifices

The EPA Method 315 and SW-846 Method 0010 dry gas meters were calibrated in accordance with Sections 5.3.1 and 5.3.2 of EPA Method 5. This procedure involves direct comparison of the metered volume passed through the dry gas meter to a reference dry test meter. The reference dry test meter is calibrated annually using a wet test meter. Before its initial use in the field, and annually thereafter, each metering system used was calibrated over the entire range of operation as specified in EPA Method 5. After field use, a calibration check of each metering system was performed at a single intermediate setting based on the field test. The post-test calibration check of the dry gas meter correction factor must agree within 5% of the correction factor generated during the initial or annual calibration. The results for the dry gas meters, summarized in Table 6.3, show the dry gas meters used met the method criteria.

6.2 REAGENTS AND GLASSWARE PREPARATION

6.2.1 EPA Method 315

Sample reagents consisted of pesticide (or better) grade acetone and methylene chloride for glassware preparation and sample recoveries. Water used in sample recoveries and the impinger trains was HPLC-grade reagent water. Reagent blanks were collected and analyzed. Refer to Section 6.5.1 for the results of the laboratory analysis of the EPA Method 315 reagent blanks.

6.2.2 SW-846 Method 0010

All sample train glassware and sample recovery apparatus were preconditioned following the procedures of SW-846 Method 0010. The procedures required that all sampling train components and sample recovery apparatus be soaked in hot soapy water (Alconox®), followed by three rinses each with tap water, distilled/deionized water, pesticide grade methanol, and methylene chloride. All glassware was then capped with aluminum foil. Quartz-fiber filters were used which were free of organic binders.

The XAD®-2 sorbent traps were prepared by QI. After cleaning, the traps were pre-spiked with surrogates, and capped with glass balls and sockets. The impinger water used was organic-free, reagent grade. Distilled-in-glass pesticide (or better) grade methylene chloride and methyl alcohol were used in equal portions (50/50 mix) as the recovery solvent.

6.2.3 SW-846 Method 0030

Prior to testing, all glassware was cleaned with non-ionic detergent in an ultrasonic bath, rinsed well with organic-free water, and dried at 110°C. Tenax® was provided by TLI. New Tenax® was Soxhlet extracted for 24 hours with methanol. The Tenax® was then dried for 6 hours in a vacuum oven at 50°C before use.

6.3 ON-SITE SAMPLING

The on-site QA/QC activities are described below.

6.3.1 Measurement Sites

Prior to sampling, both ducts were checked dimensionally to determine measurement site locations, location of velocity and sample test ports, inside duct dimensions, and sample traverse point locations. Inside duct dimensions were checked through each traverse line to ensure uniformity of the duct inside diameter.

6.3.2 Velocity Measurements

All velocity measurement apparatus were assembled, leveled, zeroed, and leak-checked prior to use and at the end of each test run. The static pressure was determined at a single point near the center of the duct cross-section.

6.3.3 Moisture

The EPA Method 315 and SW-846 Method 0010 trains were used to determine stack gas moisture. During sampling, the exit gas of the last impinger was maintained below 68°F to ensure adequate condensation of the exhaust gas water vapor. The total condensed moisture collected was determined on-site gravimetrically using an electronic platform balance with 0.1 gram sensitivity.

6.3.4 EPA Method 315 and SW-846 Method 0010

The field sampling QA/QC for EPA Method 315 and SW-846 Method 0010 began in the sample recovery area. The sample trains were set up and leak-checked to verify sample train integrity before transport to the sampling sites. At the sites, the trains were leak checked a second time. Leak checks were also conducted before and after any sample train component changes and upon completion of the test runs. Table 6.4 summarizes the EPA Method 315 and SW-846 Method 0010 field sampling QA/QC measurements and EPA's acceptability criteria. All the test runs used in the presentation of results met the QA/QC criteria of the methods, with the exception of Run S-M315-2. The isokinetic percentage for Run S-M315-2 was 110.6% which is 0.6% greater than the EPA criteria of 110%.

In addition to the samples, field blank samples were collected. EPA Method 315 and SW-846 Method 0010 sampling trains were assembled, transported to each sampling location, and leak-checked. The sample trains were then recovered using the same procedures employed during the recovery of the sample trains used during actual sample runs. The collected fractions were transferred to labeled, pre-cleaned sample bottles, transported to the subcontract laboratory, and analyzed in the same manner as the collected samples. Refer to Sections 6.5.1 and 6.5.2 for the results of the laboratory analyses of the EPA Method 315 and SW-846 Method 0010, respectively, field blanks.

6.3.5 SW-846 Method 0030

The field sampling QA/QC for the SW-846 Method 0030 testing began before the start of the test run. Each sampling train was leak checked prior to testing by pulling a vacuum of least 10 inches of mercury. After a post-test leak check, the cartridges were sealed in a suitable environment for storage and transport until analysis. A field blank was collected at each sample location. Refer to the Section 6.4.3 for the results of the laboratory analyses of the SW-846 Method 0030 field blanks.

6.3.6 EPA Method 18

The field sampling QA/QC for the EPA Method 18 testing began before the start of the test run. The sampling trains were assembled as discussed in Section 5.6.2. The adsorbent tubes remained sealed until just before being connected to the sampling trains. The sampling trains were calibrated using an electronic bubble meter prior to the start of each test run. Once the sampling began, the sample rate taken from the in-line rotameter was recorded every 10 minutes. At the completion of each test run, the sample trains were calibrated a second time using the electronic bubble meter. A set of field blanks was collected on the second day of testing. The sampling trains were assembled as described above. Two electronic bubble meter calibrations were performed on each train. Following the second calibration, the field blank tubes were capped and stored in a cooler for transport to the laboratory.

6.3.7 Particulate Deposition

The test plates were cleaned with acetone immediately prior to installation. After the test program was completed, the plates were removed and cleaned in the sample recovery area. The sample recovery area was kept clean of all dust. An acetone blank and one field blank per location were collected, analyzed, and compared to the test results. In general, field blank results were low relative to the sample results.

6.4 SAMPLE RECOVERY

Sample recovery was performed in an on-site laboratory under the supervision of the PES Project Manager.

6.4.1 EPA Method 315

Sample recovery was performed following the procedures of EPA Method 315. Reagent blanks of the water, acetone, and methylene chloride, along with unused filters, were taken. The reagent water was weighed and the liquid level marked. The back half of the train was rinsed with water and the rinse added to the reagent water and the liquid level marked again. The jar was sealed with Teflon® tape. The back half of the train was rinsed with acetone and methylene chloride and the rinses recovered in a separate jar. The liquid levels were marked and the lids sealed with Teflon® tape. The front half of the train was also rinsed with acetone and methylene chloride into a separate jar. The liquid level was marked and the jar sealed with Teflon® tape. The liquid levels were checked at the analytical laboratory to assure sample integrity.

6.4.2 SW-846 Method 0010

Recovery of the MM5 sample train was performed following the procedures of SW-846 Method 0010. In addition to the field blank, blanks were taken of reagent grade water, methanol, methylene chloride, unused filters, and the XAD®-2 resin. The sample recovery apparatus was made of Teflon® or glass and pre-cleaned as described in Section 6.2.2. The sample train cleanup was accomplished by rinsing each sample train component three times with a 50/50 mixture of methanol and methylene chloride. All sample containers were tared and then re-weighed following sample recovery. The samples were weighed a third time at the analytical laboratory to ensure sample integrity. The field blanks were handled following the same procedure.

6.4.3 SW-846 Method 0030

Recovery of the SW-846 Method 0030 samples was performed following the procedures of SW-846 Method 0030. At the end of the test run, the sample tubes were removed, capped, and stored in a cooler. The field blanks were treated in the same manner.

6.4.4 EPA Method 18

At the end of each test, the EPA Method 18 adsorbent tubes were removed, capped, and stored in a cooler for transport to the laboratory. The field blank was treated in the same way.

6.5 LABORATORY ANALYTICAL QA/QC PROCEDURES

6.5.1 EPA Method 315

The Method 315 field and laboratory blanks were analyzed following the procedures of EPA Method 315 to evaluate the effectiveness of the sample train clean-up procedures and to check for contamination of the reagent materials. The results of these blank analyses are presented in Table 6.5. The TED field blank indicates a small amount of contamination, some of which may be residue left over from T-M315-2.

6.5.2 SW-846 Method 0010

QI analyzed the SW-846 Method 0010 samples from the TED and the SED for PAHs following the procedures of CARB Method 429. Field blanks, method blanks, and laboratory blanks were used to check for contamination at both locations. The blanks were processed in the same way the field samples were processed. The TED blank results are presented in Table 6.6. The SED blank results are presented in Table 6.7. For comparison purposes, the average catch weights for the target PAH compounds in the field samples are also presented. Note that the background condition run (T-MM5-4) catch weights were not averaged with the normal operation runs (T-MM5-2 and T-MM5-2) in Table 6.6. The TED field blank results are essentially the same as the method blank and reagent blank and do not indicate any contamination. The SED field blank results show some contamination, but the contamination is very low (and insignificant) compared to the average field sample catch weight at the SED.

CARB Method 429 outlines a procedure for determining whether contributions from a field blank are significant enough to require modification of the run samples' test results. For all PAHs results from the SED, and all compounds but naphthalene at the TED, the blank values were low enough when compared to the target compounds that changes in the test results were unnecessary. The naphthalene on the background condition (run T-MM5-4) fell below the report limit when Equation 429-32 of CARB Method 429 was applied. A table showing the ratios of the TED run samples to the field blank is included with the PAHs test results in Volume 1, Appendix A.1, on page 22a.

The XAD®-2 resins were spiked with PAHs and SVOHAPs surrogate standards before going in the field (referred to here as pre-spiked surrogates). The percent recoveries for the pre-spiked PAHs surrogate in the TED samples are presented in Tables 6.8. Six of the 102 PAHs surrogate recoveries were below the 50% QC limit. The QI case narrative (in Volume 4, Appendix G, beginning on page 6) states that the low recoveries did not affect data quality because the signal-to-noise ratio was greater than 10:1. Four of the 102 PAHs surrogate recoveries were above the 150% QC limit. The QI case narrative states that for the high recoveries quantitation by isotope dilution generally precludes any adverse effect on data qualities. The percent recoveries for the pre-spiked SVOHAPs surrogate in the TED samples are presented in Tables 6.9. The QC limits were met for 34 of the 36 analyses. The 2,4,6-Tribromophenol surrogate recoveries for samples T-MM5-2 and T-MM5-3 are slightly below the lower limit. For these two samples QI confirmed the reported results by re-injecting the sample extracts.

Due to the dilution effects discussed in Section 2.0, the PAHs and SVOHAPs pre-spiked surrogates in the SED samples were not detected and QI re-spiked the surrogates after sample extraction. The percent recoveries for the re-spiked PAHs surrogates are presented in Table 6.10. Nine of the 139 PAHs surrogate recoveries were below the 50% QC limit. The QI case narrative, as mentioned above, states that the low recoveries did not affect data quality because the signal-to-noise ratio was greater than 10:1. One of the 139 PAHs surrogate recoveries was above the 150% QC limit. The QI case narrative, as mentioned above, states that for the high recoveries quantitation by isotope dilution generally precludes any adverse effect on data qualities. The

percent recoveries for the re-spiked SVOHAPs surrogate in the SED samples are presented in Table 6.11. The QC limits were met in 19 of the 38 analyses; the surrogates were not detected in other 19 analyses.

6.5.3 SW-846 Method 0030

The SW-846 Method 0030 samples were analyzed following the procedures of SW-846 Method 8260. Field and laboratory blanks were used to check for contamination. They were processed in the same way the field samples were processed. Tables 6.12 and 6.13 summarize the results for the SW-846 Method 0030 field and laboratory blanks for the TED and SED, respectively. Due to the analytical problems discussed in Section 2.0, the SED field blank was not analyzed. For comparison purposes, both tables show the average run sample catch weights for the detected target compounds in the blanks. The sample catches for the background condition are not included in the average TED run sample catch weights.

The Tenax® and Tenax®/charcoal media were spiked with surrogate standards after the field sampling and prior to sample analysis. The percent recoveries for the surrogates are summarized in Tables 6.14 and 6.15 for the TED and SED, respectively. Three TED and 7 SED samples had recoveries greater than the 150% limit. Four of the seven SED recoveries ranged from 414 to 788% and were all for the same surrogate, 4-bromofluoro-benzene. As a result, the concentrations presented for some of the VOST VOHAPs, and in particular 4-bromofluoro-benzene, may be biased high.

6.6 QA COORDINATOR FIELD AUDIT

To meet the goals of the Quality Control Program as described in the QAPP, PES supplied an on-site QA Coordinator to observe the emission testing and to audit the personnel, equipment, procedures, and record keeping. The QA Coordinator assured that all sampling train glassware and sample recovery apparatus were preconditioned following the procedures of each test method used. Prior to testing, the QA Coordinator oversaw pre-test calibration and the checking of the equipment. These procedures included checks on the dry gas meters, pitot tubes, thermocouples, and sampling nozzles.

During the testing, audits and observations were conducted at regular intervals giving ample opportunity for on-site corrections. The QA Coordinator oversaw the checks and audits of sampling, data acquisition, sample recovery, and chain of custody. The QA Coordinator also recorded his observations on standardized forms, copies of which appear in Volume 3, Appendix D, beginning on page 231.

TABLE 6.1

SUMMARY OF TEMPERATURE SENSOR CALIBRATION DATA

Temp. Sensor I.D.	Usage	Temperature, °F		Temperature Difference[a]	Tolerance
		Reference	Sensor		
TC-25	Stack Gas	36	36	0.00%	<±1.5%
		75	75	0.00%	<±1.5%
		212	214	0.27%	<±1.5%
RT-6	Stack Gas	32	32	0.00%	<±1.5%
		72	69	- 0.56%	<±1.5%
		210	210	0.00%	<±1.5%
RT-10	Stack Gas	32	32	0.00%	<±1.5%
		73	68	- 0.94%	<±1.5%
		208	210	0.30%	<±1.5%
RT-11	Stack Gas	32	36	0.81%	<±1.5%
		73	73	0.00%	<±1.5%
		206	206	0.00%	<±1.5%
RMB-15	Meter Box Inlet	33	35	0.41%	<±1.0%
		74	74	0.00%	<±1.0%
		208	210	0.30%	<±1.0%
	Meter Box Outlet	33	33	0.00%	<±1.0%
		74	75	0.19%	<±1.0%
		208	208	0.00%	<±1.0%

[a] Calculated using the absolute temperature, °R.

TABLE 6.2

SUMMARY OF PITOT TUBE DIMENSIONAL DATA

Measurement	Criteria	Results		
		Pitot Tube Identification		
		RP-11	RP-19	D-7
α_1	<10°	0	0	< 1
α_2	<10°	0	1	< 1
β_1	<5°	0	0	< 1
β_2	<5°	1	1	< 1
γ	-	0	0	< 1
θ	-	1	0	< 1
A	-	1.022	0.938	0.885
Z	≤ 0.125 in.	0.000	0.000	0.015
W	≤ 0.03125 in.	0.018	0.000	0.015
D_t	0.1875in. ≤ D_t ≤ 0.375 in.	0.375	0.375	0.315
$(A/2)/D_t$	01.05 D_t ≤ A/2 ≤ 1.50 D_t	1.36	1.25	1.40
	Acceptable	Yes	Yes	Yes
	Assigned Coefficient	0.84	0.84	0.84

TABLE 6.3

SUMMARY OF DRY GAS METER AND ORIFICE CALIBRATION DATA

Meter No.	Dry Gas Meter Correction Factor, γ			
	Pre-test	Post-test	% Diff.	EPA Criteria
3A	1.007	0.999	-0.80	± 5%
6A	1.001	1.018	1.68	± 5%
RMB 15	1.000	0.999	-0.10	± 5%

TABLE 6.4

SUMMARY OF EPA METHOD 315 AND SW-846 METHOD 0010 FIELD SAMPLING QA/QC DATA

Date	Site	Run Number	Pre-Test Leak Rate acfm	Post-Test Leak Rate acfm	EPA Criteria acfm	Percent Isokinetic	EPA Criteria
07/24/98	TED	T-MM5-1*	0.005 @ 15" Hg	0.002 @ 15" Hg	0.02	105.0	90-110%
		T-M315-1	0.012 @ 15" Hg	0.010 @ 7.5" Hg	0.02	101.6	90-110%
07/24/98	SED	S-MM5-1*	0.004 @ 12" Hg	0.002 @ 10" Hg	0.02	97.4	90-110%
		S-M315-1	0.013 @ 15" Hg	0.010 @ 13" Hg	0.02	102.3	90-110%
07/25/98	TED	T-MM5-2	0.000 @ 15" Hg	0.002 @ 8" Hg	0.02	105.8	90-110%
		T-M315-2	0.010 @ 15" Hg	0.008 @ 7" Hg	0.02	102.4	90-110%
07/25/98	SED	S-MM5-2	0.008 @ 15" Hg	0.007 @ 13" Hg	0.02	109.9	90-110%
		S-M315-2	0.002 @ 15" Hg	0.001 @ 8" Hg	0.02	110.6	90-110%
07/26/98	TED	T-MM5-4	0.000 @ 15" Hg	0.000 @ 15" Hg	0.02	105.6	90-110%
		T-M315-4	0.005 @ 15" Hg	0.004 @ 11" Hg	0.02	101.7	90-110%
07/27/98	TED	T-MM5-3	0.000 @ 15" Hg	0.010 @ 9.5" Hg	0.02	104.8	90-110%
		T-M315-3	0.003 @ 15" Hg	not recorded	0.02	103.7	90-110%
07/28/98	SED	S-MM5-4	0.007 @ 16" Hg	0.006 @ 18" Hg	0.02	92.1	90-110%
		S-MM5-5	0.009 @ 17" Hg	0.007 @ 15" Hg	0.02	100.8	90-110%
		S-M315-4	0.002 @ 15" Hg	0.001 @ 10" Hg	0.02	101.7	90-110%

* Run was used for volumetric flow rate data only.

TABLE 6.5

SUMMARY OF EPA METHOD 315 BLANK SAMPLE CATCHES

Blank[a]	Mass of Residue (mg)	Volume of Blank (mL)	Concentration of Blank (mg/mg)[b]
Acetone Wash Blank	0.1	200.3	6.4E-07
Methylene Chloride Blank	0.0	189.1	0.0
Deionized Water Blank	0.2	199.3	1.0E-06
Filter Blank	0.0	NA	NA
TED Field Blank, Filter - PM	4.3	NA	NA
TED Field Blank, Filter -MCEM	0.0	NA	NA
TED Field Blank, FH Acetone Rinse - PM	4.6	NA	NA
TED Field Blank, FH MeCl Rinse - MCEM	4.1	NA	NA
TED Field Blank, BH Solvent Rinse - MCEM	0.0	NA	NA
TED Field Blank, Impinger/H_2O Rinse - MCEM	0.0	NA	NA
SED Field Blank, Filter - PM	1.5	NA	NA
SED Field Blank, Filter -MCEM	0.3	NA	NA
SED Field Blank, FH Acetone Rinse - PM	2.1	NA	NA
SED Field Blank, FH MeCl Rinse - MCEM	2.0	NA	NA
SED Field Blank, BH Solvent Rinse - MCEM	0.1	NA	NA
SED Field Blank, Impinger/H_2O Rinse - MCEM	0.1	NA	NA

[a] FH = Front Half; BH = Back Half.
[b] Calculated using the EPA Method 315 given densities for acetone and MeCl of 785.1 mg/mL and 1,316.8 mg/mL, respectively.

TABLE 6.6

SW-846 METHOD 0010 PAHs
FIELD AND LABORATORY BLANKS RESULTS
TUNNEL EXHAUST DUCT

Compound	Amount, nanograms			
	Average Catch Weight[a]	Field Blank	Method Blank	Reagent Blank
Acenaphthene	{4,750}	60	43	38
Acenaphthylene	530	ND	ND	ND
Anthracene	{1,400}	ND	ND	ND
Benzo(a)anthracene	340	ND	ND	ND
Benzo(b)fluoranthene	145	ND	ND	ND
Benzo(k)fluoranthene	41	ND	ND	ND
Benzo(g,h,i)perylene	39	ND	ND	ND
Benzo(a)pyrene	42	ND	ND	ND
Benzo(e)pyrene	150	ND	ND	ND
Chrysene	{2,000}	22	ND	ND
Dibenz(a,h)anthracene	(8)	ND	ND	ND
Fluoranthene	{1,065}	42	16	26
Fluorene	{15,400}	160	43	43
Indeno(1,2,3-cd)pyrene	(10)	ND	ND	ND
2-Methylnaphthalene	{42,500}	280	120	140
Naphthalene	{21,500}	290	280	270
Perylene	405	ND	ND	ND
Phenanthrene	{17,000}	320	82	110
Pyrene	{2,950}	40	ND	18

[a] Average catch weight of normal operation runs T-MM5-2 and T-MM5-3, only.
{ } Estimate - Concentration exceeds calibration range.
ND Not Detectable - Results are below target analyte detection limit. Values are counted as zero in averages.
( ) Indicates an average value that includes one or more NDs averaged as zeroes.

TABLE 6.7

SW-846 METHOD 0010 PAHs
FIELD AND LABORATORY BLANKS RESULTS
SILO EXHAUST DUCT

Compound	Amount, nanograms			
	Average Catch Weight	Field Blank	Method Blank	Reagent Blank
Acenaphthene	243,000	150	43	38
Acenaphthylene	(7,330)	ND	ND	ND
Anthracene	69,000	100	ND	ND
Benzo(a)anthracene	28,700	53	ND	ND
Benzo(b)fluoranthene	ND	26	ND	ND
Benzo(k)fluoranthene	ND	ND	ND	ND
Benzo(g,h,i)perylene	ND	21	ND	ND
Benzo(a)pyrene	ND	ND	ND	ND
Benzo(e)pyrene	(5,000)	25	ND	ND
Chrysene	107,000	300	ND	ND
Dibenz(a,h)anthracene	ND	ND	ND	ND
Fluoranthene	74,000	130	16	26
Fluorene	527,000	420	43	43
Indeno(1,2,3-cd)pyrene	ND	ND	ND	ND
2-Methylnaphthalene	2,733,000	490	120	140
Naphthalene	940,000	410	280	270
Perylene	(16,300)	70	ND	ND
Phenanthrene	937,000	1,600	82	110
Pyrene	230,000	350	ND	18

( ) Indicates an average value that includes one or more NDs averaged as zeroes.
ND Not Detectable - Results are below target analyte detection limit. Values are counted as zero in averages.

TABLE 6.8

SW-846 METHOD 0010 PAHs
SURROGATE RECOVERY RESULTS
TUNNEL EXHAUST DUCT

Surrogate	Percent Recovery						
	T-MM5-2	T-MM5-3	T-MM5-4	T-MM5-FB	Method Blank	Reagent Blank	Method QC Limits
Naphthalene-d_8	65	25	90	54	86	59	50-150
Acenaphthylene-d_8	73	57	88	78	62	71	50-150
Acenaphthene-d_{10}	56	40	86	84	71	74	50-150
Fluorene-d_{10}	42	49	62	60	77	63	50-150
Phenanthrene-d_{10}	61	61	74	77	72	75	50-150
Fluoranthene-d_{10}	30	96	100	105	82	86	50-150
Pyrene-d_{10}	30	80	98	104	84	88	50-150
Benzo(a)anthra-cene-d_{12}	62	121	148	157	77	139	50-150
Chrysene-d_{12}	52	103	130	145	92	127	50-150
Benzo(b)fluor-anthene-d_{12}	101	97	108	104	92	105	50-150
Benzo(k)fluor-anthene-d_{12}	67	89	94	105	100	102	50-150
Benzo(a)-pyrene-d_{12}	83	73	90	85	80	93	50-150
Perylene-d_{12}	62	67	82	79	87	90	50-150
Indeno(123-cd)-pyrene-d_{12}	174	95	90	107	92	121	50-150
Dibenz(a,h)-anthracene-d_{14}	181	103	84	110	84	120	50-150
Benzo(g,h,i)-perylene-d_{12}	177	92	94	108	98	119	50-150
Field Surrogate							
13C-Fluorene	134	85	104	102	96	113	50-150

TABLE 6.9

SW-846 METHOD 0010 SEMI-VOLATILE SURROGATE RECOVERY RESULTS TUNNEL EXHAUST DUCT

	Percent Recovery					
Surrogate	**Nitro-benzene-d_5**	**2-Fluoro-biphenyl**	**Ter-phenyl-d_{14}**	**Phenol-d_5**	**2-Fluoro-phenol**	**2,4,6-Tri-bromophenol**
QC Limit	45-107	62-110	58-135	43-130	36-111	58-131
Sample ID						
T-MM5-2	87	105	78	67	62	49
T-MM5-3	78	106	80	69	71	52
T-MM5-4	62	86	110	61	54	65
T-MM5-FB	60	85	94	65	56	70
Reagent Blank	61	86	97	67	62	84
Method Blank	86	102	106	85	82	94

TABLE 6.10

SW-846 METHOD 0010 PAHs
SURROGATE RECOVERY RESULTS
SILO EXHAUST DUCT

Surrogate	Percent Recovery						
	S-MM5-2	S-MM5-4	S-MM5-5	S-MM5-FB	Method Blank	Reagent Blank	Method QC Limits
Naphthalene-d_8	90	85	84	61	86	59	50-150
Acenaphthylene-d_8	140	121	122	77	62	71	50-150
Acenaphthene-d_{10}	127	113	108	80	71	74	50-150
Fluorene-d_{10}	96	92	88	62	77	63	50-150
Phenanthrene-d_{10}	102	98	93	77	72	75	50-150
Fluoranthene-d_{10}	34	49	50	113	82	86	50-150
Pyrene-d_{10}	33	47	48	111	84	88	50-150
Benzo(a)anthra-cene-d_{12}	38	52	51	151	77	139	50-150
Chrysene-d_{12}	32	44	42	125	92	127	50-150
Benzo(b)fluor-anthene-d_{12}	128	134	125	106	92	105	50-150
Benzo(k)fluor-anthene-d_{12}	101	98	96	101	100	102	50-150
Benzo(a)-pyrene-d_{12}	98	98	95	93	80	93	50-150
Perylene-d_{12}	98	94	94	90	87	90	50-150
Indeno(123-cd)-pyrene-d_{12}	95	85	82	118	92	121	50-150
Dibenz(a,h)-anthracene-d_{14}	87	80	76	124	84	120	50-150
Benzo(g,h,i)-perylene-d_{12}	86	78	73	115	98	119	50-150
Field Surrogate							
13C-Fluorene	NA	NA	NA	94	96	113	50-150

TABLE 6.11

SW-846 METHOD 0010 SEMI-VOLATILE SURROGATE RECOVERY RESULTS SILO EXHAUST DUCT

	Percent Recovery					
Surrogate	**Nitro-benzene-d_5**	**2-Fluoro-biphenyl**	**Ter-phenyl-d_{14}**	**Phenol-d_5**	**2-Fluoro-phenol**	**2,4,6-Tri-bromophenol**
QC Limit	45-107	62-110	58-135	43-130	36-111	58-131
Sample ID						
S-MM5-2	ND	ND	ND	ND	ND	ND
S-MM5-4	ND	ND	ND	ND	ND	ND
S-MM5-5	ND	ND	ND	ND	ND	ND
S-MM5-FB	58	79	101	59	54	74
S-MM5-RB	61	86	97	67	62	84
Method Blank	86	102	106	85	82	94

ND Indicates that a compound was not detected.

TABLE 6.12

SW-846 METHOD 0030
FIELD AND LABORATORY BLANKS RESULTS
TUNNEL EXHAUST DUCT

Compound	Amount, in micrograms							
	Avg. Catch Weight[a]	TED Field Blank	VOST Blank 80998	VOST Blank 81798	VOST Blank 81898	VOST Blank 81998	VOST Blank 82198	VOST Blank 82498
Benzene	0.187	{0.006}	{0.048}	{0.013}	{0.023}	ND	{0.039}	ND
Bromomethane	(0.036)	ND	{0.010}	ND	ND	ND	ND	ND
Chloromethane	(0.054)	ND	{0.015}	ND	ND	{0.003}	ND	ND
Cumene	ND	ND	ND	ND	ND	{0.001}	ND	ND
n-Hexane	{0.144}	ND	ND	ND	ND	{0.001}	ND	ND
Methylene Chloride	(0.288)	0.054	{0.001}	ND	ND	{0.002}	ND	ND
Styrene	(0.021)	ND	{0.001}	ND	ND	ND	ND	ND
Toluene	{0.265}	{0.006}	{0.003}	{0.005}	{0.008}	{0.003}	ND	ND
m-/p-Xylene	{0.409}	ND	ND	ND	ND	{0.001}	ND	ND

[a] Average Catch Weight = Average of all 10 TED normal operation SW-846 Method 0030 run samples.
ND Indicates that a compound was not detected.
( ) Indicates an average value which includes one or more NDs averaged as zeroes.
{ } Indicates an average value which includes one or more estimated values.
NOTE: All other VOST compounds were not detected in the blanks and are not listed here.

TABLE 6.13

SW-846 METHOD 0030
LABORATORY BLANK RESULTS
SILO EXHAUST DUCT

Compound	Amount, in micrograms	
	Avg. Catch Weight[a]	VOSTBLK 090498
Acetone	{1.388}	{0.005}
Benzene	{1.082}	{0.027}
Bromomethane	{0.132}	{0.022}
2-Butanone	(0.867)	{0.003}
Chloroform	ND	{0.001}
Chloromethane	0.568	{0.025}
Cumene	ND	{0.001}
Ethylbenzene	{1.391}	{0.001}
n-Hexane	{4.006}	{0.001}
Iodomethane	ND	{0.002}
Methylene Chloride	(0.005)	{0.004}
Styrene	(0.128)	{0.002}
Tetrachloroethene	ND	{0.001}
Toluene	{2.281}	{0.004}
m-/p-Xylene	{7.301}	{0.001}
o-Xylene	{2.112}	{0.001}

[a] Average Catch Weight = Average of all five of the SED SW-846 Method 0030 run samples.
ND Indicates that a compound was not detected.
( ) Indicates an average value which includes one or more NDs averaged as zeroes.
{ } Indicates an average value which includes one or more estimated values.
NOTE: All other VOST compounds were not detected in the blank and are not listed here.

TABLE 6.14

SW-846 METHOD 0030
SURROGATE RECOVERY RESULTS
TUNNEL EXHAUST DUCT

Sample ID	Percent Recovery			
	Dibromo-fluoromethane	Toluene-d_8	4-Bromofluoro-benzene	Method QC Limits
T-V-1-1-A T	92	136	162	50-150
T-V-1-1-B TC	100	122	113	50-150
T-V-1-2-A T	92	140	170	50-150
T-V-1-2-B TC	98	126	111	50-150
T-V-1-3-A T	103	135	136	50-150
T-V-1-3-B TC	97	125	114	50-150
T-V-2-1-A,B T/TC	88	111	128	50-150
T-V-2-2-A,B T/TC	85	107	126	50-150
T-V-2-3-A,B T/TC	83	104	119	50-150
T-V-2-4-A,B T/TC	83	104	118	50-150
T-V-3-1-A,B T/TC	84	102	113	50-150
T-V-3-2-A,B T/TC	82	104	133	50-150
T-V-3-3-A,B T/TC	84	106	107	50-150
T-V-4-1-A T	105	113	154	50-150
T-V-4-1-B TC	103	116	116	50-150
T-V-4-2-A T	97	98	108	50-150
T-V-4-2-B TC	101	107	107	50-150
T-V-4-4-A T	83	104	102	50-150
T-V-FB-A,B T/TC	117	105	95	50-150
VOSTBLK080998 T/TC	99	104	109	50-150
VOSTBLK081798	107	118	102	50-150
VOSTBLK081898	102	127	106	50-150
VOSTBLK081998	109	112	117	50-150
VOSTBLK082198 T/TC	109	104	81	50-150
VOSTBLK082498 T/TC	93	102	79	50-150

TABLE 6.15

SW-846 METHOD 0030
SURROGATE RECOVERY RESULTS
SILO EXHAUST DUCT

Sample ID	Percent Recovery			
	Dibromo-fluoromethane	Toluene-d_8	4-Bromofluoro-benzene	Method QC Limits
S-V-1-1-A T	156	174	788	50-150
S-V-1-2-A T	133	144	414	50-150
S-V-1-2-B TC	114	114	132	50-150
S-V-1-4-A T	128	133	120	50-150
S-V-1-4-B TC	115	114	132	50-150
S-V-2-4-A T	108	127	582	50-150
S-V-2-4-B TC	114	113	130	50-150
S-V-3-3-A T	117	160	695	50-150
S-V-3-3-B TC	119	113	127	50-150
VOSTBLK090498 T/TC	112	109	126	50-150

VOLUME 1

APPENDIX A

TEST RESULTS AND CALCULATIONS

A.1 TED TEST RESULTS
A.2 SED TEST RESULTS
A.3 EXAMPLE CALCULATIONS
A.4 PARTICULATE DEPOSITION DATA

APPENDIX A.1

TED TEST RESULTS

Summary of Stack Gas Parameters and Test Results
PM and MCEM - EPA Method 315
Normal Operations, Tunnel Exhaust Duct
Asphalt Plant C - California

	RUN NUMBER	T-M315-1	T-M315-2	T-M315-3	
	RUN DATE	7/24/98	7/25/98	7/27/98	Average
	RUN TIME	0720-1303	0711-1127	0711-1200	
	MEASURED DATA				
γ	Meter Box Correction Factor	1.001	1.001	1.001	1.001
ΔH	Avg Meter Orifice Pressure, in. H_2O	1.62	1.69	1.46	1.59
P_{bar}	Barometric Pressure, inches Hg	29.35	29.33	29.23	29.30
V_m	Sample Volume, ft^3	169.030	172.210	162.817	168.019
T_m	Average Meter Temperature, °F	86	90	92	89
P_{static}	Stack Static Pressure, inches H_2O	-4.7	-5.9	-4.5	-5.0
T_s	Average Stack Temperature, °F	85	88	94	89
V_{lc}	Condensate Collected, ml	124.0	84.8	64.5	91.1
CO_2	Carbon Dioxide content, % by volume	0.0	0.0	0.0	0.0
O_2	Oxygen content, % by volume	20.9	20.9	20.9	20.9
N_2	Nitrogen content, % by volume	79.1	79.1	79.1	79.1
C_p	Pitot Tube Coefficient	0.84	0.84	0.84	0.84
$\Delta p^{1/2}$	Average Square Root Δp, (in. $H_2O)^{1/2}$	0.5736	0.5729	0.5352	0.5606
Θ	Sample Run Duration, minutes	240	240	240	240
D_n	Nozzle Diameter, inches	0.258	0.258	0.257	0.258
	Tons of asphalt loaded per test period	1,875.0	1,499.7	2,529.7	1,968.1
	CALCULATED DATA				
A_n	Nozzle Area, ft^2	0.000363	0.000363	0.000360	0.000362
$V_{m(std)}$	Standard Meter Volume, dscf	160.986	162.940	152.700	158.875
$V_{m(std)}$	Standard Meter Volume, dscm	4.559	4.614	4.324	4.499
P_s	Stack Pressure, inches Hg	29.00	28.90	28.90	28.93
B_{ws}	Moisture, % by volume	3.5	2.4	1.9	2.6
$B_{ws(sat)}$	Moisture (at saturation), % by volume	4.2	4.5	5.5	4.8
V_{wstd}	Standard Water Vapor Volume, ft^3	5.837	3.992	3.036	4.288
$1-B_{ws}$	Dry Mole Fraction	0.965	0.976	0.981	0.974
M_d	Molecular Weight (d.b.), lb/lb•mole	28.84	28.84	28.84	28.84
M_s	Molecular Weight (w.b.), lb/lb•mole	28.46	28.58	28.62	28.55
V_s	Stack Gas Velocity, ft/s	33.5	33.5	31.4	32.8
A	Stack Area, ft^2	5.59	5.59	5.59	5.59
Q_a	Stack Gas Volumetric flow, acfm	11,220	11,226	10,535	10,994
Q_s	Stack Gas Volumetric flow, dscfm	10,159	10,201	9,514	9,958
$Q_{s(cmm)}$	Stack Gas Volumetric flow, dscmm	288	289	269	282
I	Isokinetic Sampling Ratio, %	101.6	102.4	103.7	102.6

Summary of Stack Gas Parameters and Test Results
PM and MCEM - EPA Method 315
Normal Operations, Tunnel Exhaust Duct
Asphalt Plant C - California
Page 2 of 2

	RUN NUMBER	T-M315-1	T-M315-2	T-M315-3	
	RUN DATE	7/24/98	7/25/98	7/27/98	Average
	RUN TIME	0720-1303	0711-1127	0711-1200	
	EMISSIONS DATA				
	Particulate Matter				
PM	Target Catch, g	0.0128	0.0078	0.0085	
C_{PM}	Concentration, gr/dscf	1.23E-03	7.39E-04	8.59E-04	9.42E-04
C_{PM}	Concentration, g/dscm	2.81E-03	1.69E-03	1.97E-03	2.15E-03
	Emission Rate, lb/test period	4.27E-01	2.58E-01	2.80E-01	3.22E-01
	Emission Rate, lb/ton	2.28E-04	1.72E-04	1.11E-04	1.70E-04
	Methylene Chloride Extractable Matter				
M_{CEM}	Target Catch, g	0.0112	0.0024	0.0027	
C_{MCEM}	Concentration, gr/dscf	1.07E-03	2.27E-04	2.73E-04	5.25E-04
C_{MCEM}	Concentration, g/dscm	2.46E-03	5.20E-04	6.24E-04	1.20E-03
E_{MCEM}	Emission Rate, lb/test period	3.74E-01	7.95E-02	8.90E-02	1.81E-01
	Emission Rate, lb/ton	1.99E-04	5.30E-05	3.52E-05	9.59E-05

Summary of Stack Gas Parameters and Test Results
PM and MCEM - EPA Method 315
Background Condition, Tunnel Exhaust Duct
Asphalt Plant C - California

	RUN NUMBER	**T-M315-4**
	RUN DATE	**7/26/98**
	RUN TIME	**0926-1340**
	MEASURED DATA	
γ	Meter Box Correction Factor	1.001
ΔH	Avg Meter Orifice Pressure, in. H_2O	1.88
P_{bar}	Barometric Pressure, inches Hg	29.31
V_m	Sample Volume, ft^3	180.285
T_m	Average Meter Temperature, °F	100
P_{static}	Stack Static Pressure, inches H_2O	-5.9
T_s	Average Stack Temperature, °F	91
V_{lc}	Condensate Collected, ml	115.7
CO_2	Carbon Dioxide content, % by volume	0.0
O_2	Oxygen content, % by volume	20.9
N_2	Nitrogen content, % by volume	79.1
C_p	Pitot Tube Coefficient	0.84
$\Delta p^{1/2}$	Average Square Root Δp, (in. $H_2O)^{1/2}$	0.5985
Θ	Sample Run Duration, minutes	240
D_n	Nozzle Diameter, inches	0.258
	CALCULATED DATA	
A_n	Nozzle Area, ft^2	0.000363
$V_{m(std)}$	Standard Meter Volume, dscf	167.419
$V_{m(std)}$	Standard Meter Volume, dscm	4.741
P_s	Stack Pressure, inches Hg	28.88
B_{ws}	Moisture, % by volume	3.2
$B_{ws(sat)}$	Moisture (at saturation), % by volume	5.1
V_{wstd}	Standard Water Vapor Volume, ft^3	5.446
$1-B_{ws}$	Dry Mole Fraction	0.968
M_d	Molecular Weight (d.b.), lb/lb•mole	28.84
M_s	Molecular Weight (w.b.), lb/lb•mole	28.49
V_s	Stack Gas Velocity, ft/s	35.2
A	Stack Area, ft^2	5.59
Q_a	Stack Gas Volumetric flow, acfm	11,788
Q_s	Stack Gas Volumetric flow, dscfm	10,549
$Q_{s(cmm)}$	Stack Gas Volumetric flow, dscmm	299
I	Isokinetic Sampling Ratio, %	101.7

Summary of Stack Gas Parameters and Test Results
Asphalt Plant C - California
PM and MCEM - EPA Method 315
Background Condition, Tunnel Exhaust Duct
Page 2 of 2

	RUN NUMBER	**T-M315-4**
	RUN DATE	**7/26/98**
	RUN TIME	**0926-1340**
	EMISSIONS DATA	
	Particulate Matter	
PM	Target Catch, g	0.0086
C_{PM}	Concentration, gr/dscf	7.93E-04
C_{PM}	Concentration, g/dscm	1.81E-03
	Emission Rate, lb/test period	2.87E-01
	Methylene Chloride Extractable Matter	
M_{CEM}	Target Catch, g	0.0041
C_{MCEM}	Concentration, gr/dscf	3.78E-04
C_{MCEM}	Concentration, g/dscm	8.65E-04
	Emission Rate, lb/test period	1.37E-01

8

M315 Analytical Calculations
Run Number: T-M315-1

Particulate Matter (PM) Determinations					
Acetone Wash Blank PM Calculations					QC limit
M_a	Mass of residue of acetone, mg			0.1	
ρ_A	Density of acetone, mg/mL			785.1	
V_a	Volume of acetone blank, mL			200.3	
C_a	Acetone blank concentration, mg/mg			6.4E-07	
V_{aw}	Volume of acetone used in wash, mL			55.1	
W_a	Acetone wash blank, mg			0.028	0.043
Container Number	**Final weight grams**	**Tare of dish or beaker, g**	**Tare of filter, g**	**Weight Gain grams**	
1	147.3795	146.9268	0.4491	0.0036	
2	175.6308	175.6216		0.0092	
Total				0.0128	
Total particulate catch weight, in milligrams =				12.8	
Total particulate minus the acetone blank (W_a), mg =				12.77	

MeCl Extractable Matter (MCEM) Determinations					
Container Number	**Final weight in grams**	**Tare of dish, g**	**Weight Gain grams**	**Acetone Wash Volume, mL**	**MeCl Wash Volume, mL**
1	1.6326	1.6303	0.0023		
2+2M	1.6262	1.6209	0.0053	55.1	100
3W	1.6621	1.6620	0.0001		
3S	1.0236	1.0200	0.0036	119.1	119.1
Total			0.0113	174.2	219.1
totals from line above are:			m_{total} in mg	sum of V_{aw}, mL	sum of V_{tw}, mL
			11.3	174.2	219.1

		Sample Data	QC limit
W_a	Acetone wash blank, mg	0.087	0.137
M_t	Mass of residue of MeCl blank, mg	0.0	
ρ_T	Density of MeCl, mg/mL	1316.8	
V_t	Volume of MeCl blank, mL	189.1	
C_t	MeCl blank concentration, mg/mg	0.00E+00	
W_t	MeCl wash blank, mg	0.00	0.462
F_b	Filter Blank, mg	0.0	
M_{MCEM}	Total MeCl Extractable Matter weight, mg	11.21	

M315 Analytical Calculations
Run Number: T-M315-2

Particulate Matter (PM) Determinations					
Acetone Wash Blank PM Calculations					QC limit
M_a	Mass of residue of acetone, mg			0.1	
ρ_A	Density of acetone, mg/mL			785.1	
V_a	Volume of acetone blank, mL			200.3	
C_a	Acetone blank concentration, mg/mg			6.4E-07	
V_{aw}	Volume of acetone used in wash, mL			40.9	
W_a	Acetone wash blank, mg			0.020	0.032
Container Number	**Final weight grams**	**Tare of dish or beaker, g**	**Tare of filter, g**	**Weight Gain grams**	
1	203.3178	202.8661	0.4489	0.0028	
2	165.8757	165.8707		0.0050	
Total				0.0078	
Total particulate catch weight, in milligrams =				7.8	
Total particulate minus the acetone blank (W_a), mg =				7.78	

MeCl Extractable Matter (MCEM) Determinations					
Container Number	**Final weight in grams**	**Tare of dish, g**	**Weight Gain grams**	**Acetone Wash Volume, mL**	**MeCl Wash Volume, mL**
1	1.6459	1.6458	0.0001		
2+2M	1.6294	1.6273	0.0021	40.9	100
3W	1.6374	1.6373	0.0001		
3S	1.0229	1.0227	0.0002	90.5	90.5
Total			0.0025	131.4	190.5
		totals from line above are:	m_{total} in mg	sum of V_{aw}, mL	sum of V_{tw}, mL
			2.5	131.4	190.5

		Sample Data	QC limit
W_a	Acetone wash blank, mg	0.07	0.103
M_t	Mass of residue of MeCl blank, mg	0.0	
ρ_T	Density of MeCl, mg/mL	1316.8	
V_t	Volume of MeCl blank, mL	189.1	
C_t	MeCl blank concentration, mg/mg	0.00E+00	
W_t	MeCl wash blank, mg	0.00	0.401
F_b	Filter Blank, mg	0.0	
M_{MCEM}	Total MeCl Extractable Matter weight, mg	2.43	

M315 Analytical Calculations
Run Number: T-M315-3

Particulate Matter (PM) Determinations					
Acetone Wash Blank PM Calculations					QC limit
M_a	Mass of residue of acetone, mg			0.1	
ρ_A	Density of acetone, mg/mL			785.1	
V_a	Volume of acetone blank, mL			200.3	
C_a	Acetone blank concentration, mg/mg			6.4E-07	
V_{aw}	Volume of acetone used in wash, mL			125.4	
W_a	Acetone wash blank, mg			0.063	0.098
Container Number	**Final weight grams**	**Tare of dish or beaker, g**	**Tare of filter, g**	**Weight Gain grams**	
1	162.6478	162.1919	0.4530	0.0029	
2	164.9848	164.9791		0.0057	
Total				0.0086	
Total particulate catch weight, in milligrams =				8.6	
Total particulate minus the acetone blank (W_a), mg =				8.54	

MeCl Extractable Matter (MCEM) Determinations					
Container Number	**Final weight in grams**	**Tare of dish, g**	**Weight Gain grams**	**Acetone Wash Volume, mL**	**MeCl Wash Volume, mL**
1	1.6396	1.6390	0.0006		
2+2M	1.6420	1.6402	0.0018	125.4	100
3W	1.6065	1.6064	0.0001		
3S	1.0261	1.0258	0.0003	129.3	129.3
Total			0.0028	254.7	229.3
		totals from line above are:	m_{total} in mg	sum of V_{aw}, mL	sum of V_{tw}, mL
			2.8	254.7	229.3

		Sample Data	QC limit
W_a	Acetone wash blank, mg	0.13	0.200
M_t	Mass of residue of MeCl blank, mg	0.0	
ρ_T	Density of MeCl, mg/mL	1316.8	
V_t	Volume of MeCl blank, mL	189.1	
C_t	MeCl blank concentration, mg/mg	0.00E+00	
W_t	MeCl wash blank, mg	0.00	0.483
F_b	Filter Blank, mg	0.0	
M_{MCEM}	Total MeCl Extractable Matter weight, mg	2.67	

11

M315 Analytical Calculations
Run Number: T-M315-4

Particulate Matter (PM) Determinations					
Acetone Wash Blank PM Calculations					QC limit
M_a	Mass of residue of acetone, mg			0.1	
ρ_A	Density of acetone, mg/mL			785.1	
V_a	Volume of acetone blank, mL			200.3	
C_a	Acetone blank concentration, mg/mg			6.4E-07	
V_{aw}	Volume of acetone used in wash, mL			136	
W_a	Acetone wash blank, mg			0.068	0.107
Container Number	**Final weight grams**	**Tare of dish or beaker, g**	**Tare of filter, g**	**Weight Gain grams**	
1	157.8204	157.3657	0.4527	0.0020	
2	177.8092	177.8025		0.0067	
Total				0.0087	
Total particulate catch weight, in milligrams =				8.7	
Total particulate minus the acetone blank (W_a), mg =				8.63	

MeCl Extractable Matter (MCEM) Determinations					
Container Number	**Final weight in grams**	**Tare of dish, g**	**Weight Gain grams**	**Acetone Wash Volume, mL**	**MeCl Wash Volume, mL**
1	1.6384	1.6384	0.0000		
2+2M	1.6422	1.6392	0.0030	136	100
3W	1.5927	1.5923	0.0004		
3S	1.0274	1.0267	0.0007	99.5	99.5
Total			0.0041	235.5	199.5
totals from line above are:			m_{total} in mg	sum of V_{aw}, mL	sum of V_{tw}, mL
			4.1	235.5	199.5

		Sample Data	QC limit
W_a	Acetone wash blank, mg	0.12	0.185
M_t	Mass of residue of MeCl blank, mg	0.0	
ρ_T	Density of MeCl, mg/mL	1316.8	
V_t	Volume of MeCl blank, mL	189.1	
C_t	MeCl blank concentration, mg/mg	0.00E+00	
W_t	MeCl wash blank, mg	0.00	0.420
F_b	Filter Blank, mg	0.0	
M_{MCEM}	Total MeCl Extractable Matter weight, mg	3.98	

Summary of Stack Gas Parameters and Test Results
PAHs - SW-846 Method 0010
Normal Operations, Tunnel Exhaust Duct
Asphalt Plant C - California

	RUN NUMBER	T-MM5-2	T-MM5-3	
	RUN DATE	7/25/98	7/27/98	Average
	RUN TIME	0710-1121	0710-1155	
	MEASURED DATA			
γ	Meter Box Correction Factor	1.000	1.000	1.000
ΔH	Avg Meter Orifice Pressure, in. H_2O	1.44	1.56	1.50
P_{bar}	Barometric Pressure, inches Hg	29.33	29.23	29.28
V_m	Sample Volume, ft^3	157.650	163.906	160.778
T_m	Average Meter Temperature, °F	78	85	82
P_{static}	Stack Static Pressure, inches H_2O	-4.8	-4.5	-4.7
T_s	Average Stack Temperature, °F	82	89	85
V_{lc}	Condensate Collected, ml	116.4	121.0	118.7
CO_2	Carbon Dioxide content, % by volume	0.0	0.0	0.0
O_2	Oxygen content, % by volume	20.9	20.9	20.9
N_2	Nitrogen content, % by volume	79.1	79.1	79.1
C_p	Pitot Tube Coefficient	0.84	0.84	0.84
$\Delta p^{1/2}$	Average Square Root Δp, (in. $H_2O)^{1/2}$	0.5442	0.5660	0.5551
Θ	Sample Run Duration, minutes	240	240	240
D_n	Nozzle Diameter, inches	0.252	0.252	0.252
	Tons of asphalt loaded per test period	1,478.7	2,530.2	2,004.5
	CALCULATED DATA			
A_n	Nozzle Area, ft^2	0.000346	0.000346	0.000346
$V_{m(std)}$	Standard Meter Volume, dscf	152.087	155.540	153.813
$V_{m(std)}$	Standard Meter Volume, dscm	4.307	4.404	4.356
P_s	Stack Pressure, inches Hg	28.98	28.90	28.94
B_{ws}	Moisture, % by volume	3.5	3.5	3.5
$B_{ws(sat)}$	Moisture (at saturation), % by volume	3.8	4.7	4.3
V_{wstd}	Standard Water Vapor Volume, ft^3	5.479	5.695	5.587
$1-B_{ws}$	Dry Mole Fraction	0.965	0.965	0.965
M_d	Molecular Weight (d.b.), lb/lb•mole	28.84	28.84	28.84
M_s	Molecular Weight (w.b.), lb/lb•mole	28.46	28.45	28.46
V_s	Stack Gas Velocity, ft/s	31.7	33.2	32.4
A	Stack Area, ft^2	5.59	5.59	5.59
Q_a	Stack Gas Volumetric flow, acfm	10,618	11,128	10,873
Q_s	Stack Gas Volumetric flow, dscfm	9,663	9,972	9,818
$Q_{s(cmm)}$	Stack Gas Volumetric flow, dscmm	274	282	278
I	Isokinetic Sampling Ratio, %	105.8	104.8	105.3

Summary of Stack Gas Parameters and Test Results
PAHs - SW-846 Method 0010
Normal Operations, Tunnel Exhaust Duct
Asphalt Plant C - California

	T-MM5-2	T-MM5-3	Average
Acenaphthene			
Molecular Weight, g/g-mole	154.21	154.21	
Target Catch, µg	{4.500}	{5.000}	{4.750}
Concentration, mg/dscm [a]	{1.04E-03}	{1.14E-03}	{1.09E-03}
Concentration, ppbvd [b]	{1.63E-01}	{1.77E-01}	{1.70E-01}
Emission Rate, lb/test period [c]	{1.51E-04}	{1.70E-04}	{1.60E-04}
Emission Rate, lb/ton [d]	{1.02E-07}	{6.70E-08}	{8.47E-08}
Acenaphthylene			
Molecular Weight, g/g-mole	154.21	154.21	
Target Catch, µg	0.470	0.590	0.530
Concentration, mg/dscm [a]	1.09E-04	1.34E-04	1.22E-04
Concentration, ppbvd [b]	1.70E-02	2.09E-02	1.90E-02
Emission Rate, lb/test period [c]	1.58E-05	2.00E-05	1.79E-05
Emission Rate, lb/ton [d]	1.07E-08	7.91E-09	9.30E-09
Anthracene			
Molecular Weight, g/g-mole	178.22	178.22	
Target Catch, µg	{1.700}	1.100	{1.400}
Concentration, mg/dscm [a]	{3.95E-04}	2.50E-04	{3.22E-04}
Concentration, ppbvd [b]	{5.33E-02}	3.37E-02	{4.35E-02}
Emission Rate, lb/test period [c]	{5.72E-05}	3.73E-05	{2.67E-08}
Emission Rate, lb/ton [d]	{3.87E-08}	1.47E-08	{2.67E-08}
Benzo(a)anthracene			
Molecular Weight, g/g-mole	228.29	228.29	
Target Catch, µg	0.370	0.310	0.340
Concentration, mg/dscm [a]	8.59E-05	7.04E-05	7.81E-05
Concentration, ppbvd [b]	9.05E-03	7.42E-03	8.23E-03
Emission Rate, lb/test period [c]	1.24E-05	1.05E-05	1.15E-05
Emission Rate, lb/ton [d]	8.41E-09	4.16E-09	6.28E-09
Benzo(b)fluoranthene			
Molecular Weight, g/g-mole	252.32	252.32	
Target Catch, µg	0.160	0.130	0.145
Concentration, mg/dscm [a]	3.71E-05	2.95E-05	3.33E-05
Concentration, ppbvd [b]	3.54E-03	2.81E-03	3.18E-03
Emission Rate, lb/test period [c]	5.38E-06	4.41E-06	4.89E-06
Emission Rate, lb/ton [d]	3.64E-09	1.74E-09	2.69E-09

Summary of Stack Gas Parameters and Test Results
PAHs - SW-846 Method 0010
Normal Operations, Tunnel Exhaust Duct
Asphalt Plant C - California

	T-MM5-2	T-MM5-3	Average
Benzo(k)fluoranthene			
Molecular Weight, g/g-mole	252.32	252.32	
Target Catch, µg	0.047	0.034	0.041
Concentration, mg/dscm [a]	1.09E-05	7.72E-06	9.32E-06
Concentration, ppbvd [b]	1.04E-03	7.36E-04	8.88E-04
Emission Rate, lb/test period [c]	1.58E-06	1.15E-06	1.37E-06
Emission Rate, lb/ton [d]	1.07E-09	4.56E-10	7.62E-10
Benzo(ghi)perylene			
Molecular Weight, g/g-mole	276.34	276.34	
Target Catch, µg	0.044	0.033	0.039
Concentration, mg/dscm [a]	1.02E-05	7.49E-06	8.85E-06
Concentration, ppbvd [b]	8.89E-04	6.52E-04	7.71E-04
Emission Rate, lb/test period [c]	1.48E-06	1.12E-06	1.30E-06
Emission Rate, lb/ton [d]	1.00E-09	4.42E-10	7.21E-10
Benzo(a)pyrene			
Molecular Weight, g/g-mole	252.30	252.30	
Target Catch, µg	0.048	0.035	0.042
Concentration, mg/dscm [a]	1.11E-05	7.95E-06	9.55E-06
Concentration, ppbvd [b]	1.06E-03	7.58E-04	9.10E-04
Emission Rate, lb/test period [c]	1.61E-06	1.19E-06	1.40E-06
Emission Rate, lb/ton [d]	1.09E-09	4.69E-10	7.80E-10
Benzo(e)pyrene			
Molecular Weight, g/g-mole	252.30	252.30	
Target Catch, µg	0.180	0.120	0.150
Concentration, mg/dscm [a]	4.18E-05	2.72E-05	3.45E-05
Concentration, ppbvd [b]	3.98E-03	2.60E-03	3.29E-03
Emission Rate, lb/test period [c]	6.05E-06	4.07E-06	5.06E-06
Emission Rate, lb/ton [d]	4.09E-09	1.61E-09	2.85E-09
Chrysene			
Molecular Weight, g/g-mole	228.28	228.28	
Target Catch, µg	{2.100}	{1.900}	{2.000}
Concentration, mg/dscm [a]	{4.88E-04}	{4.31E-04}	{4.59E-04}
Concentration, ppbvd [b]	{5.14E-02}	{4.55E-02}	{4.84E-02}
Emission Rate, lb/test period [c]	{7.06E-05}	{6.45E-05}	{6.75E-05}
Emission Rate, lb/ton [d]	{4.77E-08}	{2.55E-08}	{3.66E-08}

Summary of Stack Gas Parameters and Test Results
PAHs - SW-846 Method 0010
Normal Operations, Tunnel Exhaust Duct
Asphalt Plant C - California

	T-MM5-2	T-MM5-3	Average
Dibenz(a,h)anthracene			
Molecular Weight, g/g-mole	278.33	278.33	
Target Catch, µg	0.016	ND	(0.008)
Concentration, mg/dscm [a]	3.71E-06	ND	(1.86E-06)
Concentration, ppbvd [b]	3.21E-04	ND	(1.61E-04)
Emission Rate, lb/test period [c]	5.38E-07	ND	(2.69E-07)
Emission Rate, lb/ton [d]	3.64E-10	ND	(1.82E-10)
Fluoranthene			
Molecular Weight, g/g-mole	202.26	202.26	
Target Catch, µg	{1.200}	{0.930}	{1.065}
Concentration, mg/dscm [a]	{2.79E-04}	{2.11E-04}	{2.45E-04}
Concentration, ppbvd [b]	{3.31E-02}	{2.51E-02}	{2.91E-02}
Emission Rate, lb/test period [c]	{4.03E-05}	{3.15E-05}	{3.59E-05}
Emission Rate, lb/ton [d]	{2.73E-08}	{1.25E-08}	{1.99E-08}
Fluorene			
Molecular Weight, g/g-mole	166.21	166.21	
Target Catch, µg	{21.000}	{9.800}	{15.400}
Concentration, mg/dscm [a]	{4.88E-03}	{2.22E-03}	{3.55E-03}
Concentration, ppbvd [b]	{7.06E-01}	{3.22E-01}	{5.14E-01}
Emission Rate, lb/test period [c]	{7.06E-04}	{3.32E-04}	{5.19E-04}
Emission Rate, lb/ton [d]	{4.77E-07}	{1.31E-07}	{3.04E-07}
Indeno(1,2,3-cd)pyrene			
Molecular Weight, g/g-mole	290.34	290.34	
Target Catch, µg	0.020	ND	(0.010)
Concentration, mg/dscm [a]	4.64E-06	ND	(2.32E-06)
Concentration, ppbvd [b]	3.85E-04	ND	(1.92E-04)
Emission Rate, lb/test period [c]	6.72E-07	ND	(3.36E-07)
Emission Rate, lb/ton [d]	4.55E-10	ND	(2.27E-10)
2-Methylnaphthalene			
Molecular Weight, g/g-mole	142.20	142.20	
Target Catch, µg	{38.000}	{47.000}	{42.500}
Concentration, mg/dscm [a]	{8.82E-03}	{1.07E-02}	{9.75E-03}
Concentration, ppbvd [b]	{1.49E+00}	{1.81E+00}	{1.65E+00}
Emission Rate, lb/test period [c]	{1.28E-03}	{1.59E-03}	{1.44E-03}
Emission Rate, lb/ton [d]	{8.64E-07}	{6.30E-07}	{7.47E-07}

Summary of Stack Gas Parameters and Test Results
PAHs - SW-846 Method 0010
Normal Operations, Tunnel Exhaust Duct
Asphalt Plant C - California

	T-MM5-2	T-MM5-3	Average
Naphthalene			
Molecular Weight, g/g-mole	128.16	128.16	
Target Catch, µg	{19.000}	{24.000}	{21.500}
Concentration, mg/dscm [a]	{4.41E-03}	{5.45E-03}	{4.93E-03}
Concentration, ppbvd [b]	{8.28E-01}	{1.02E+00}	{9.25E-01}
Emission Rate, lb/test period [c]	{6.39E-04}	{8.14E-04}	{7.26E-04}
Emission Rate, lb/ton [d]	{4.32E-07}	{3.22E-07}	{3.77E-07}
Perylene			
Molecular Weight, g/g-mole	252.30	252.30	
Target Catch, µg	0.530	0.280	0.405
Concentration, mg/dscm [a]	1.23E-04	6.36E-05	9.33E-05
Concentration, ppbvd [b]	1.17E-02	6.06E-03	8.90E-03
Emission Rate, lb/test period [c]	1.78E-05	9.50E-06	1.37E-05
Emission Rate, lb/ton [d]	1.20E-08	3.75E-09	7.90E-09
Phenanthrene			
Molecular Weight, g/g-mole	178.22	178.22	
Target Catch, µg	{21.000}	{13.000}	{17.000}
Concentration, mg/dscm [a]	{4.88E-03}	{2.95E-03}	{3.91E-03}
Concentration, ppbvd [b]	{6.58E-01}	{3.98E-01}	{5.28E-01}
Emission Rate, lb/test period [c]	{7.06E-04}	{4.41E-04}	{5.74E-04}
Emission Rate, lb/ton [d]	{4.77E-07}	{1.74E-07}	{3.26E-07}
Pyrene			
Molecular Weight, g/g-mole	202.24	202.24	
Target Catch, µg	{3.200}	{2.700}	{2.950}
Concentration, mg/dscm [a]	{7.43E-04}	{6.13E-04}	{6.78E-04}
Concentration, ppbvd [b]	{8.84E-02}	{7.29E-02}	{8.06E-02}
Emission Rate, lb/test period [c]	{1.08E-04}	{9.16E-05}	{9.96E-05}
Emission Rate, lb/ton [d]	{7.28E-08}	{3.62E-08}	{5.45E-08}

[a] Milligrams per dry standard cubic meter at 68° F (20° C) and 1 atm.

[b] Parts per billion by volume.

[c] Pounds per test period.

[d] Pounds per ton of asphalt loaded.

ND Not Detectable - Results are below target analyte detection limit. Values are counted as zero.

{ } Estimate - Concentration in the sample exceeded the method calibration range, but was still within the linear response range of the detector.

Summary of Stack Gas Parameters and Test Results
PAHs - SW-846 Method 0010
Background Condition, Tunnel Exhaust Duct
Asphalt Plant C - California

	RUN NUMBER	**T-MM5-4**
	RUN DATE	**7/26/98**
	RUN TIME	**0925-1343**
	MEASURED DATA	
γ	Meter Box Correction Factor	1.000
ΔH	Avg Meter Orifice Pressure, in. H_2O	1.85
P_{bar}	Barometric Pressure, inches Hg	29.31
V_m	Sample Volume, ft^3	179.672
T_m	Average Meter Temperature, °F	91
P_{static}	Stack Static Pressure, inches H_2O	-4.9
T_s	Average Stack Temperature, °F	87
V_{lc}	Condensate Collected, ml	132.9
CO_2	Carbon Dioxide content, % by volume	0.0
O_2	Oxygen content, % by volume	20.9
N_2	Nitrogen content, % by volume	79.1
C_p	Pitot Tube Coefficient	0.84
$\Delta p^{1/2}$	Average Square Root Δp, (in. $H_2O)^{1/2}$	0.6108
Θ	Sample Run Duration, minutes	240
D_n	Nozzle Diameter, inches	0.252
	Tons of asphalt loaded per test period	none
	CALCULATED DATA	
A_n	Nozzle Area, ft^2	0.000346
$V_{m(std)}$	Standard Meter Volume, dscf	169.391
$V_{m(std)}$	Standard Meter Volume, dscm	4.797
P_s	Stack Pressure, inches Hg	28.95
B_{ws}	Moisture, % by volume	3.6
$B_{ws(sat)}$	Moisture (at saturation), % by volume	4.5
V_{wstd}	Standard Water Vapor Volume, ft^3	6.256
$1-B_{ws}$	Dry Mole Fraction	0.964
M_d	Molecular Weight (d.b.), lb/lb•mole	28.84
M_s	Molecular Weight (w.b.), lb/lb•mole	28.45
V_s	Stack Gas Velocity, ft/s	35.8
A	Stack Area, ft^2	5.59
Q_a	Stack Gas Volumetric flow, acfm	11,981
Q_s	Stack Gas Volumetric flow, dscfm	10,784
$Q_{s(cmm)}$	Stack Gas Volumetric flow, dscmm	305
I	Isokinetic Sampling Ratio, %	105.6

Summary of Stack Gas Parameters and Test Results
PAHs - SW-846 Method 0010
Background Condition, Tunnel Exhaust Duct
Asphalt Plant C - California

	T-MM5-4
Acenaphthene	
Molecular Weight, g/g-mole	154.21
Target Catch, µg	{0.550}
Concentration, mg/dscm [a]	{1.15E-04}
Concentration, ppbvd [b]	{1.79E-02}
Emission Rate, lb/test period [c]	{1.85E-05}
Acenaphthylene	
Molecular Weight, g/g-mole	154.21
Target Catch, µg	0.080
Concentration, mg/dscm [a]	1.67E-05
Concentration, ppbvd [b]	2.60E-03
Emission Rate, lb/test period [c]	2.69E-06
Anthracene	
Molecular Weight, g/g-mole	178.22
Target Catch, µg	0.220
Concentration, mg/dscm [a]	4.59E-05
Concentration, ppbvd [b]	6.19E-03
Emission Rate, lb/test period [c]	7.41E-06
Benzo(a)anthracene	
Molecular Weight, g/g-mole	228.29
Target Catch, µg	0.015
Concentration, mg/dscm [a]	3.13E-06
Concentration, ppbvd [b]	3.29E-04
Emission Rate, lb/test period [c]	5.05E-07
Benzo(b)fluoranthene	
Molecular Weight, g/g-mole	252.32
Target Catch, µg	0.018
Concentration, mg/dscm [a]	3.75E-06
Concentration, ppbvd [b]	3.58E-04
Emission Rate, lb/test period [c]	6.06E-07
Benzo(k)fluoranthene	
Molecular Weight, g/g-mole	252.32
Target Catch, µg	ND
Concentration, mg/dscm [a]	ND
Concentration, ppbvd [b]	ND
Emission Rate, lb/test period [c]	ND

Summary of Stack Gas Parameters and Test Results
PAHs - SW-846 Method 0010
Background Condition, Tunnel Exhaust Duct
Asphalt Plant C - California

	T-MM5-4
Benzo(ghi)perylene	
Molecular Weight, g/g-mole	276.34
Target Catch, µg	0.0075
Concentration, mg/dscm [a]	1.56E-06
Concentration, ppbvd [b]	1.36E-04
Emission Rate, lb/test period [c]	2.53E-07
Benzo(a)pyrene	
Molecular Weight, g/g-mole	252.30
Target Catch, µg	ND
Concentration, mg/dscm [a]	ND
Concentration, ppbvd [b]	ND
Emission Rate, lb/test period [c]	ND
Benzo(e)pyrene	
Molecular Weight, g/g-mole	252.30
Target Catch, µg	0.013
Concentration, mg/dscm [a]	2.71E-06
Concentration, ppbvd [b]	2.58E-04
Emission Rate, lb/test period [c]	4.38E-07
Chrysene	
Molecular Weight, g/g-mole	228.28
Target Catch, µg	0.310
Concentration, mg/dscm [a]	6.46E-05
Concentration, ppbvd [b]	6.81E-03
Emission Rate, lb/test period [c]	1.04E-05
Dibenz(a,h)anthracene	
Molecular Weight, g/g-mole	278.33
Target Catch, µg	ND
Concentration, mg/dscm [a]	ND
Concentration, ppbvd [b]	ND
Emission Rate, lb/test period [c]	ND
Fluoranthene	
Molecular Weight, g/g-mole	202.26
Target Catch, µg	0.300
Concentration, mg/dscm [a]	6.25E-05
Concentration, ppbvd [b]	7.44E-03
Emission Rate, lb/test period [c]	1.01E-05

Summary of Stack Gas Parameters and Test Results
PAHs - SW-846 Method 0010
Background Condition, Tunnel Exhaust Duct
Asphalt Plant C - California

	T-MM5-4
Fluorene	
Molecular Weight, g/g-mole	166.21
Target Catch, µg	{1.600}
Concentration, mg/dscm [a]	{3.34E-04}
Concentration, ppbvd [b]	{4.83E-02}
Emission Rate, lb/test period [c]	{5.39E-05}
Indeno(1,2,3-cd)pyrene	
Molecular Weight, g/g-mole	290.34
Target Catch, µg	ND
Concentration, mg/dscm [a]	ND
Concentration, ppbvd [b]	ND
Emission Rate, lb/test period [c]	ND
2-Methylnaphthalene	
Molecular Weight, g/g-mole	142.20
Target Catch, µg	{2.600}
Concentration, mg/dscm [a]	{5.42E-04}
Concentration, ppbvd [b]	{9.17E-02}
Emission Rate, lb/test period [c]	{8.76E-05}
Naphthalene	
Molecular Weight, g/g-mole	128.16
Target Catch, µg	BRL
Concentration, mg/dscm [a]	BRL
Concentration, ppbvd [b]	BRL
Emission Rate, lb/test period [c]	BRL
Perylene	
Molecular Weight, g/g-mole	252.30
Target Catch, µg	ND
Concentration, mg/dscm [a]	ND
Concentration, ppbvd [b]	ND
Emission Rate, lb/test period [c]	ND
Phenanthrene	
Molecular Weight, g/g-mole	178.22
Target Catch, µg	{4.000}
Concentration, mg/dscm [a]	{8.34E-04}
Concentration, ppbvd [b]	{1.13E-01}
Emission Rate, lb/test period [c]	{1.35E-04}

Summary of Stack Gas Parameters and Test Results
PAHs - SW-846 Method 0010
Background Condition, Tunnel Exhaust Duct
Asphalt Plant C - California

	T-MM5-4
Pyrene	
Molecular Weight, g/g-mole	202.24
Target Catch, µg	{0.600}
Concentration, mg/dscm [a]	{1.25E-04}
Concentration, ppbvd [b]	{1.49E-02}
Emission Rate, lb/test period [c]	{2.02E-05}

[a] Milligrams per dry standard cubic meter at 68° F (20° C) and 1 atm.

[b] Parts per billion by volume.

[c] Pounds per test period.

ND Not Detectable - Results are below target analyte detection limit. Values are counted as zero.

{ } Estimate - Concentration in the sample exceeded the method calibration range, but was still within the linear response range of the detector.

BRL Below Reporting Limit based on Equation 429-32 of CARB Method 429.

PAHs RUN SAMPLES TO METHOD BLANK RATIOS
TUNNEL EXHAUST DUCT
ASPHALT PLANT C - LOS ANGELES, CA

PAHs Compound	TED Field Blank catch, ng	Run T-MM5-2 sample catch, ng	Ratio of sample to blank	Run T-MM5-3 sample catch, ng	Ratio of sample to blank	Run T-MM5-4 sample catch, ng	Ratio of sample to blank
Naphthalene	290	{19,000}	65.5	{24,000}	82.8	{1,400}	4.8
Methylnaphthalene	280	{38,000}	135.7	{47,000}	167.9	{2,600}	9.3
Acenaphthylene	ND	470	NA	590	NA	80	NA
Acenaphthene	60	{4,500}	75.0	{5,000}	83.3	{550}	9.2
Fluorene	160	{21,000}	131.3	{9,800}	61.3	{1,600}	10.0
Phenanthrene	320	{21,000}	65.6	{13,000}	40.6	{4,000}	12.5
Anthracene	ND	{1,700}	NA	1,100	NA	220	NA
Fluoranthene	42	{1,200}	28.6	{930}	22.1	300	7.1
Pyrene	40	{3,200}	80.0	{2,700}	67.5	{600}	15.0
Benzo(a)anthracene	ND	370	NA	310	NA	15	NA
Chrysene	22	{2,100}	95.5	{1,900}	86.4	310	14.1
Benzo(b)fluoranthene	ND	160	NA	130	NA	18	NA
Benzo(k)fluoranthene	ND	47	NA	34	NA	0	NA
Benzo(e)pyrene	ND	180	NA	120	NA	13	NA
Benzo(a)pyrene	ND	48	NA	35	NA	0	NA
Perylene	ND	530	NA	280	NA	0	NA
Indeno(1,2,3-cd)pyrene	ND	20	NA	0	NA	0	NA
Dibenz(a,h)anthracene	ND	16	NA	0	NA	0	NA
Benzo(ghi)perylene	ND	44	NA	33	NA	7.5	NA

* Based on Equation 429-32 of CARB Method 429, a ratio < 5 indicates the compound is below the reporting limit (BRL).

Summary of Stack Gas Parameters and Test Results
Semi-volatile Organics - SW-846 Method 0010
Normal Operations, Tunnel Exhaust Duct
Asphalt Plant C - California

	RUN NUMBER	T-MM5-2	T-MM5-3	
	RUN DATE	7/25/98	7/27/98	Average
	RUN TIME	0710-1121	0710-1155	
	MEASURED DATA			
γ	Meter Box Correction Factor	1.000	1.000	1.000
ΔH	Avg Meter Orifice Pressure, in. H_2O	1.44	1.56	1.50
P_{bar}	Barometric Pressure, inches Hg	29.33	29.23	29.28
V_m	Sample Volume, ft^3	157.650	163.906	160.778
T_m	Average Meter Temperature, °F	78	85	82
P_{static}	Stack Static Pressure, inches H_2O	-4.8	-4.5	-4.7
T_s	Average Stack Temperature, °F	82	89	85
V_{lc}	Condensate Collected, ml	116.4	121.0	118.7
CO_2	Carbon Dioxide content, % by volume	0.0	0.0	0.0
O_2	Oxygen content, % by volume	20.9	20.9	20.9
N_2	Nitrogen content, % by volume	79.1	79.1	79.1
C_p	Pitot Tube Coefficient	0.84	0.84	0.84
$\Delta p^{1/2}$	Average Square Root Δp, (in. $H_2O)^{1/2}$	0.5442	0.5660	0.5551
Θ	Sample Run Duration, minutes	240	240	240
D_n	Nozzle Diameter, inches	0.252	0.252	0.252
	Tons of asphalt loaded per test period	1,478.7	2,530.2	2,004.5
	CALCULATED DATA			
A_n	Nozzle Area, ft^2	0.000346	0.000346	0.000346
$V_{m(std)}$	Standard Meter Volume, dscf	152.087	155.540	153.813
$V_{m(std)}$	Standard Meter Volume, dscm	4.307	4.404	4.356
P_s	Stack Pressure, inches Hg	28.98	28.90	28.94
B_{ws}	Moisture, % by volume	3.5	3.5	3.5
V_{wstd}	Standard Water Vapor Volume, ft^3	5.479	5.695	5.587
$1-B_{ws}$	Dry Mole Fraction	0.965	0.965	0.965
M_d	Molecular Weight (d.b.), lb/lb•mole	28.84	28.84	28.84
M_s	Molecular Weight (w.b.), lb/lb•mole	28.46	28.45	28.46
V_s	Stack Gas Velocity, ft/s	31.7	33.2	32.4
A	Stack Area, ft^2	5.59	5.59	5.59
Q_a	Stack Gas Volumetric flow, acfm	10,618	11,128	10,873
Q_s	Stack Gas Volumetric flow, dscfm	9,663	9,972	9,818
$Q_{s(cmm)}$	Stack Gas Volumetric flow, dscmm	274	282	278
I	Isokinetic Sampling Ratio, %	105.8	104.8	105.3

23

Summary of Stack Gas Parameters and Test Results
Semi-volatile Organics - SW-846 Method 0010
Normal Operations, Tunnel Exhaust Duct
Asphalt Plant C - California

	T-MM5-2	T-MM5-3	Average
Acenaphthene			
Molecular Weight, g/g-mole	154.21	154.21	
Target Catch, µg	ND	ND	ND
Concentration, mg/dscm [a]	ND	ND	ND
Concentration, ppbvd [b]	ND	ND	ND
Emission Rate, lb/test period [c]	ND	ND	ND
Emission Rate, lb/ton [d]	ND	ND	ND
Acenaphthylene			
Molecular Weight, g/g-mole	154.21	154.21	
Target Catch, µg	ND	ND	ND
Concentration, mg/dscm [a]	ND	ND	ND
Concentration, ppbvd [b]	ND	ND	ND
Emission Rate, lb/test period [c]	ND	ND	ND
Emission Rate, lb/ton [d]	ND	ND	ND
Acetophenone			
Molecular Weight, g/g-mole	120.15	120.15	
Target Catch, µg	ND	ND	ND
Concentration, mg/dscm [a]	ND	ND	ND
Concentration, ppbvd [b]	ND	ND	ND
Emission Rate, lb/test period [c]	ND	ND	ND
Emission Rate, lb/ton [d]	ND	ND	ND
4-Aminobiphenyl			
Molecular Weight, g/g-mole	169.22	169.22	
Target Catch, µg	ND	ND	ND
Concentration, mg/dscm [a]	ND	ND	ND
Concentration, ppbvd [b]	ND	ND	ND
Emission Rate, lb/test period [c]	ND	ND	ND
Emission Rate, lb/ton [d]	ND	ND	ND
Aniline			
Molecular Weight, g/g-mole	93.12	93.12	
Target Catch, µg	ND	ND	ND
Concentration, mg/dscm [a]	ND	ND	ND
Concentration, ppbvd [b]	ND	ND	ND
Emission Rate, lb/test period [c]	ND	ND	ND
Emission Rate, lb/ton [d]	ND	ND	ND

Summary of Stack Gas Parameters and Test Results
Semi-volatile Organics - SW-846 Method 0010
Normal Operations, Tunnel Exhaust Duct
Asphalt Plant C - California

	T-MM5-2	T-MM5-3	Average
Anthracene			
Molecular Weight, g/g-mole	178.22	178.22	
Target Catch, µg	ND	ND	ND
Concentration, mg/dscm [a]	ND	ND	ND
Concentration, ppbvd [b]	ND	ND	ND
Emission Rate, lb/test period [c]	ND	ND	ND
Emission Rate, lb/ton [d]	ND	ND	ND
Benzidine			
Molecular Weight, g/g-mole	184.23	184.23	
Target Catch, µg	ND	ND	ND
Concentration, mg/dscm [a]	ND	ND	ND
Concentration, ppbvd [b]	ND	ND	ND
Emission Rate, lb/test period [c]	ND	ND	ND
Emission Rate, lb/ton [d]	ND	ND	ND
Benzo(a)anthracene			
Molecular Weight, g/g-mole	228.29	228.29	
Target Catch, µg	ND	ND	ND
Concentration, mg/dscm [a]	ND	ND	ND
Concentration, ppbvd [b]	ND	ND	ND
Emission Rate, lb/test period [c]	ND	ND	ND
Emission Rate, lb/ton [d]	ND	ND	ND
Benzo(b)fluoranthene			
Molecular Weight, g/g-mole	252.32	252.32	
Target Catch, µg	ND	ND	ND
Concentration, mg/dscm [a]	ND	ND	ND
Concentration, ppbvd [b]	ND	ND	ND
Emission Rate, lb/test period [c]	ND	ND	ND
Emission Rate, lb/ton [d]	ND	ND	ND
Benzo(k)fluoranthene			
Molecular Weight, g/g-mole	252.32	252.32	
Target Catch, µg	ND	ND	ND
Concentration, mg/dscm [a]	ND	ND	ND
Concentration, ppbvd [b]	ND	ND	ND
Emission Rate, lb/test period [c]	ND	ND	ND
Emission Rate, lb/ton [d]	ND	ND	ND

Summary of Stack Gas Parameters and Test Results
Semi-volatile Organics - SW-846 Method 0010
Normal Operations, Tunnel Exhaust Duct
Asphalt Plant C - California

	T-MM5-2	T-MM5-3	Average
Benzoic acid			
Molecular Weight, g/g-mole	122.12	122.12	
Target Catch, µg	ND	ND	ND
Concentration, mg/dscm [a]	ND	ND	ND
Concentration, ppbvd [b]	ND	ND	ND
Emission Rate, lb/test period [c]	ND	ND	ND
Emission Rate, lb/ton [d]	ND	ND	ND
Benzo(g,h,i)perylene			
Molecular Weight, g/g-mole	276.34	276.34	
Target Catch, µg	ND	ND	ND
Concentration, mg/dscm [a]	ND	ND	ND
Concentration, ppbvd [b]	ND	ND	ND
Emission Rate, lb/test period [c]	ND	ND	ND
Emission Rate, lb/ton [d]	ND	ND	ND
Benzo(a)pyrene			
Molecular Weight, g/g-mole	252.30	252.30	
Target Catch, µg	ND	ND	ND
Concentration, mg/dscm [a]	ND	ND	ND
Concentration, ppbvd [b]	ND	ND	ND
Emission Rate, lb/test period [c]	ND	ND	ND
Emission Rate, lb/ton [d]	ND	ND	ND
Benzo(e)pyrene			
Molecular Weight, g/g-mole	252.30	252.30	
Target Catch, µg	ND	ND	ND
Concentration, mg/dscm [a]	ND	ND	ND
Concentration, ppbvd [b]	ND	ND	ND
Emission Rate, lb/test period [c]	ND	ND	ND
Emission Rate, lb/ton [d]	ND	ND	ND
Benzyl alcohol			
Molecular Weight, g/g-mole	108.13	108.13	
Target Catch, µg	ND	ND	ND
Concentration, mg/dscm [a]	ND	ND	ND
Concentration, ppbvd [b]	ND	ND	ND
Emission Rate, lb/test period [c]	ND	ND	ND
Emission Rate, lb/ton [d]	ND	ND	ND

Summary of Stack Gas Parameters and Test Results
Semi-volatile Organics - SW-846 Method 0010
Normal Operations, Tunnel Exhaust Duct
Asphalt Plant C - California

	T-MM5-2	T-MM5-3	Average
Biphenyl			
Molecular Weight, g/g-mole	154.20	154.20	
Target Catch, µg	ND	ND	ND
Concentration, mg/dscm [a]	ND	ND	ND
Concentration, ppbvd [b]	ND	ND	ND
Emission Rate, lb/test period [c]	ND	ND	ND
Emission Rate, lb/ton [d]	ND	ND	ND
4-Bromophenyl phenyl ether			
Molecular Weight, g/g-mole	249.11	249.11	
Target Catch, µg	ND	ND	ND
Concentration, mg/dscm [a]	ND	ND	ND
Concentration, ppbvd [b]	ND	ND	ND
Emission Rate, lb/test period [c]	ND	ND	ND
Emission Rate, lb/ton [d]	ND	ND	ND
Butyl benzyl phthalate			
Molecular Weight, g/g-mole	312.36	312.36	
Target Catch, µg	ND	ND	ND
Concentration, mg/dscm [a]	ND	ND	ND
Concentration, ppbvd [b]	ND	ND	ND
Emission Rate, lb/test period [c]	ND	ND	ND
Emission Rate, lb/ton [d]	ND	ND	ND
Chloroacetophenone			
Molecular Weight, g/g-mole	154.59	154.59	
Target Catch, µg	ND	ND	ND
Concentration, mg/dscm [a]	ND	ND	ND
Concentration, ppbvd [b]	ND	ND	ND
Emission Rate, lb/test period [c]	ND	ND	ND
Emission Rate, lb/ton [d]	ND	ND	ND
4-Chloroaniline			
Molecular Weight, g/g-mole	127.57	127.57	
Target Catch, µg	ND	ND	ND
Concentration, mg/dscm [a]	ND	ND	ND
Concentration, ppbvd [b]	ND	ND	ND
Emission Rate, lb/test period [c]	ND	ND	ND
Emission Rate, lb/ton [d]	ND	ND	ND

Summary of Stack Gas Parameters and Test Results
Semi-volatile Organics - SW-846 Method 0010
Normal Operations, Tunnel Exhaust Duct
Asphalt Plant C - California

	T-MM5-2	T-MM5-3	Average
bis(2-Chloroethoxy)-methane			
Molecular Weight, g/g-mole	173.04	173.04	
Target Catch, µg	ND	ND	ND
Concentration, mg/dscm [a]	ND	ND	ND
Concentration, ppbvd [b]	ND	ND	ND
Emission Rate, lb/test period [c]	ND	ND	ND
Emission Rate, lb/ton [d]	ND	ND	ND
bis(2-Chloroethyl) ether			
Molecular Weight, g/g-mole	143.02	143.02	
Target Catch, µg	ND	ND	ND
Concentration, mg/dscm [a]	ND	ND	ND
Concentration, ppbvd [b]	ND	ND	ND
Emission Rate, lb/test period [c]	ND	ND	ND
Emission Rate, lb/ton [d]	ND	ND	ND
4-Chloro-3-methylphenol			
Molecular Weight, g/g-mole	142.58	142.58	
Target Catch, µg	ND	ND	ND
Concentration, mg/dscm [a]	ND	ND	ND
Concentration, ppbvd [b]	ND	ND	ND
Emission Rate, lb/test period [c]	ND	ND	ND
Emission Rate, lb/ton [d]	ND	ND	ND
2-Chloronaphthalene			
Molecular Weight, g/g-mole	162.61	162.61	
Target Catch, µg	ND	ND	ND
Concentration, mg/dscm [a]	ND	ND	ND
Concentration, ppbvd [b]	ND	ND	ND
Emission Rate, lb/test period [c]	ND	ND	ND
Emission Rate, lb/ton [d]	ND	ND	ND
2-Chlorophenol			
Molecular Weight, g/g-mole	128.56	128.56	
Target Catch, µg	ND	ND	ND
Concentration, mg/dscm [a]	ND	ND	ND
Concentration, ppbvd [b]	ND	ND	ND
Emission Rate, lb/test period [c]	ND	ND	ND
Emission Rate, lb/ton [d]	ND	ND	ND

Summary of Stack Gas Parameters and Test Results
Semi-volatile Organics - SW-846 Method 0010
Normal Operations, Tunnel Exhaust Duct
Asphalt Plant C - California

	T-MM5-2	T-MM5-3	Average
4-Chlorophenyl phenyl ether			
Molecular Weight, g/g-mole	204.66	204.66	
Target Catch, µg	ND	ND	ND
Concentration, mg/dscm [a]	ND	ND	ND
Concentration, ppbvd [b]	ND	ND	ND
Emission Rate, lb/test period [c]	ND	ND	ND
Emission Rate, lb/ton [d]	ND	ND	ND
Chrysene			
Molecular Weight, g/g-mole	228.28	228.28	
Target Catch, µg	ND	ND	ND
Concentration, mg/dscm [a]	ND	ND	ND
Concentration, ppbvd [b]	ND	ND	ND
Emission Rate, lb/test period [c]	ND	ND	ND
Emission Rate, lb/ton [d]	ND	ND	ND
Cumene			
Molecular Weight, g/g-mole	120.19	120.19	
Target Catch, µg	ND	ND	ND
Concentration, mg/dscm [a]	ND	ND	ND
Concentration, ppbvd [b]	ND	ND	ND
Emission Rate, lb/test period [c]	ND	ND	ND
Emission Rate, lb/ton [d]	ND	ND	ND
Dibenz(a,h)anthracene			
Molecular Weight, g/g-mole	278.33	278.33	
Target Catch, µg	ND	ND	ND
Concentration, mg/dscm [a]	ND	ND	ND
Concentration, ppbvd [b]	ND	ND	ND
Emission Rate, lb/test period [c]	ND	ND	ND
Emission Rate, lb/ton [d]	ND	ND	ND
Dibenzofuran			
Molecular Weight, g/g-mole	168.20	168.20	
Target Catch, µg	ND	ND	ND
Concentration, mg/dscm [a]	ND	ND	ND
Concentration, ppbvd [b]	ND	ND	ND
Emission Rate, lb/test period [c]	ND	ND	ND
Emission Rate, lb/ton [d]	ND	ND	ND

Summary of Stack Gas Parameters and Test Results
Semi-volatile Organics - SW-846 Method 0010
Normal Operations, Tunnel Exhaust Duct
Asphalt Plant C - California

	T-MM5-2	T-MM5-3	Average
1,2-Dibromo-3-chloropropane (DBCP)			
Molecular Weight, g/g-mole	236.36	236.36	
Target Catch, µg	ND	ND	ND
Concentration, mg/dscm [a]	ND	ND	ND
Concentration, ppbvd [b]	ND	ND	ND
Emission Rate, lb/test period [c]	ND	ND	ND
Emission Rate, lb/ton [d]	ND	ND	ND
Di-n-butyl phthalate			
Molecular Weight, g/g-mole	278.34	278.34	
Target Catch, µg	ND	ND	ND
Concentration, mg/dscm [a]	ND	ND	ND
Concentration, ppbvd [b]	ND	ND	ND
Emission Rate, lb/test period [c]	ND	ND	ND
Emission Rate, lb/ton [d]	ND	ND	ND
1,2-Dichlorobenzene			
Molecular Weight, g/g-mole	147.01	147.01	
Target Catch, µg	ND	ND	ND
Concentration, mg/dscm [a]	ND	ND	ND
Concentration, ppbvd [b]	ND	ND	ND
Emission Rate, lb/test period [c]	ND	ND	ND
Emission Rate, lb/ton [d]	ND	ND	ND
1,3-Dichlorobenzene			
Molecular Weight, g/g-mole	147.01	147.01	
Target Catch, µg	ND	ND	ND
Concentration, mg/dscm [a]	ND	ND	ND
Concentration, ppbvd [b]	ND	ND	ND
Emission Rate, lb/test period [c]	ND	ND	ND
Emission Rate, lb/ton [d]	ND	ND	ND
1,4-Dichlorobenzene			
Molecular Weight, g/g-mole	147.01	147.01	
Target Catch, µg	ND	ND	ND
Concentration, mg/dscm [a]	ND	ND	ND
Concentration, ppbvd [b]	ND	ND	ND
Emission Rate, lb/test period [c]	ND	ND	ND
Emission Rate, lb/ton [d]	ND	ND	ND

Summary of Stack Gas Parameters and Test Results
Semi-volatile Organics - SW-846 Method 0010
Normal Operations, Tunnel Exhaust Duct
Asphalt Plant C - California

	T-MM5-2	T-MM5-3	Average
3,3'-Dichlorobenzidine			
Molecular Weight, g/g-mole	253.13	253.13	
Target Catch, µg	ND	ND	ND
Concentration, mg/dscm [a]	ND	ND	ND
Concentration, ppbvd [b]	ND	ND	ND
Emission Rate, lb/test period [c]	ND	ND	ND
Emission Rate, lb/ton [d]	ND	ND	ND
2,4-Dichlorophenol			
Molecular Weight, g/g-mole	163.01	163.01	
Target Catch, µg	ND	ND	ND
Concentration, mg/dscm [a]	ND	ND	ND
Concentration, ppbvd [b]	ND	ND	ND
Emission Rate, lb/test period [c]	ND	ND	ND
Emission Rate, lb/ton [d]	ND	ND	ND
Diethyl phthalate			
Molecular Weight, g/g-mole	222.24	222.24	
Target Catch, µg	ND	ND	ND
Concentration, mg/dscm [a]	ND	ND	ND
Concentration, ppbvd [b]	ND	ND	ND
Emission Rate, lb/test period [c]	ND	ND	ND
Emission Rate, lb/ton [d]	ND	ND	ND
N-N-Diethylaniline			
Molecular Weight, g/g-mole	149.23	149.23	
Target Catch, µg	ND	ND	ND
Concentration, mg/dscm [a]	ND	ND	ND
Concentration, ppbvd [b]	ND	ND	ND
Emission Rate, lb/test period [c]	ND	ND	ND
Emission Rate, lb/ton [d]	ND	ND	ND
3,3'-Dimethoxybenzidine			
Molecular Weight, g/g-mole	244.28	244.28	
Target Catch, µg	ND	ND	ND
Concentration, mg/dscm [a]	ND	ND	ND
Concentration, ppbvd [b]	ND	ND	ND
Emission Rate, lb/test period [c]	ND	ND	ND
Emission Rate, lb/ton [d]	ND	ND	ND

Summary of Stack Gas Parameters and Test Results
Semi-volatile Organics - SW-846 Method 0010
Normal Operations, Tunnel Exhaust Duct
Asphalt Plant C - California

	T-MM5-2	T-MM5-3	Average
Dimethyl phthalate			
Molecular Weight, g/g-mole	194.19	194.19	
Target Catch, µg	ND	ND	ND
Concentration, mg/dscm [a]	ND	ND	ND
Concentration, ppbvd [b]	ND	ND	ND
Emission Rate, lb/test period [c]	ND	ND	ND
Emission Rate, lb/ton [d]	ND	ND	ND
Dimethylaniline			
Molecular Weight, g/g-mole	121.18	121.18	
Target Catch, µg	ND	ND	ND
Concentration, mg/dscm [a]	ND	ND	ND
Concentration, ppbvd [b]	ND	ND	ND
Emission Rate, lb/test period [c]	ND	ND	ND
Emission Rate, lb/ton [d]	ND	ND	ND
3,3'-Dimethylbenzidine			
Molecular Weight, g/g-mole	212.28	212.28	
Target Catch, µg	ND	ND	ND
Concentration, mg/dscm [a]	ND	ND	ND
Concentration, ppbvd [b]	ND	ND	ND
Emission Rate, lb/test period [c]	ND	ND	ND
Emission Rate, lb/ton [d]	ND	ND	ND
2,4-Dimethylphenol			
Molecular Weight, g/g-mole	122.17	122.17	
Target Catch, µg	ND	ND	ND
Concentration, mg/dscm [a]	ND	ND	ND
Concentration, ppbvd [b]	ND	ND	ND
Emission Rate, lb/test period [c]	ND	ND	ND
Emission Rate, lb/ton [d]	ND	ND	ND
4,6-Dinitro-2-methylphenol			
Molecular Weight, g/g-mole	198.13	198.13	
Target Catch, µg	ND	ND	ND
Concentration, mg/dscm [a]	ND	ND	ND
Concentration, ppbvd [b]	ND	ND	ND
Emission Rate, lb/test period [c]	ND	ND	ND
Emission Rate, lb/ton [d]	ND	ND	ND

Summary of Stack Gas Parameters and Test Results
Semi-volatile Organics - SW-846 Method 0010
Normal Operations, Tunnel Exhaust Duct
Asphalt Plant C - California

	T-MM5-2	T-MM5-3	Average
2,4-Dinitrophenol			
Molecular Weight, g/g-mole	184.11	184.11	
Target Catch, µg	ND	ND	ND
Concentration, mg/dscm [a]	ND	ND	ND
Concentration, ppbvd [b]	ND	ND	ND
Emission Rate, lb/test period [c]	ND	ND	ND
Emission Rate, lb/ton [d]	ND	ND	ND
2,4-Dinitrotoluene			
Molecular Weight, g/g-mole	182.14	182.14	
Target Catch, µg	ND	ND	ND
Concentration, mg/dscm [a]	ND	ND	ND
Concentration, ppbvd [b]	ND	ND	ND
Emission Rate, lb/test period [c]	ND	ND	ND
Emission Rate, lb/ton [d]	ND	ND	ND
2,6-Dinitrotoluene			
Molecular Weight, g/g-mole	182.14	182.14	
Target Catch, µg	ND	ND	ND
Concentration, mg/dscm [a]	ND	ND	ND
Concentration, ppbvd [b]	ND	ND	ND
Emission Rate, lb/test period [c]	ND	ND	ND
Emission Rate, lb/ton [d]	ND	ND	ND
Di-n-octyl phthalate			
Molecular Weight, g/g-mole	390.56	390.56	
Target Catch, µg	ND	ND	ND
Concentration, mg/dscm [a]	ND	ND	ND
Concentration, ppbvd [b]	ND	ND	ND
Emission Rate, lb/test period [c]	ND	ND	ND
Emission Rate, lb/ton [d]	ND	ND	ND
bis(2-Ethylhexyl)-phthalate			
Molecular Weight, g/g-mole	390.54	390.54	
Target Catch, µg	ND	ND	ND
Concentration, mg/dscm [a]	ND	ND	ND
Concentration, ppbvd [b]	ND	ND	ND
Emission Rate, lb/test period [c]	ND	ND	ND
Emission Rate, lb/ton [d]	ND	ND	ND

Summary of Stack Gas Parameters and Test Results
Semi-volatile Organics - SW-846 Method 0010
Normal Operations, Tunnel Exhaust Duct
Asphalt Plant C - California

	T-MM5-2	T-MM5-3	Average
Fluoranthene			
Molecular Weight, g/g-mole	202.26	202.26	
Target Catch, µg	ND	ND	ND
Concentration, mg/dscm [a]	ND	ND	ND
Concentration, ppbvd [b]	ND	ND	ND
Emission Rate, lb/test period [c]	ND	ND	ND
Emission Rate, lb/ton [d]	ND	ND	ND
Fluorene			
Molecular Weight, g/g-mole	166.21	166.21	
Target Catch, µg	ND	ND	ND
Concentration, mg/dscm [a]	ND	ND	ND
Concentration, ppbvd [b]	ND	ND	ND
Emission Rate, lb/test period [c]	ND	ND	ND
Emission Rate, lb/ton [d]	ND	ND	ND
Hexachlorobenzene			
Molecular Weight, g/g-mole	284.80	284.80	
Target Catch, µg	ND	ND	ND
Concentration, mg/dscm [a]	ND	ND	ND
Concentration, ppbvd [b]	ND	ND	ND
Emission Rate, lb/test period [c]	ND	ND	ND
Emission Rate, lb/ton [d]	ND	ND	ND
Hexachlorobutadiene			
Molecular Weight, g/g-mole	260.76	154.21	
Target Catch, µg	ND	ND	ND
Concentration, mg/dscm [a]	ND	ND	ND
Concentration, ppbvd [b]	ND	ND	ND
Emission Rate, lb/test period [c]	ND	ND	ND
Emission Rate, lb/ton [d]	ND	ND	ND
Hexachlorocyclopentadiene			
Molecular Weight, g/g-mole	272.77	272.77	
Target Catch, µg	ND	ND	ND
Concentration, mg/dscm [a]	ND	ND	ND
Concentration, ppbvd [b]	ND	ND	ND
Emission Rate, lb/test period [c]	ND	ND	ND
Emission Rate, lb/ton [d]	ND	ND	ND

Summary of Stack Gas Parameters and Test Results
Semi-volatile Organics - SW-846 Method 0010
Normal Operations, Tunnel Exhaust Duct
Asphalt Plant C - California

	T-MM5-2	T-MM5-3	Average
Hexachloroethane			
Molecular Weight, g/g-mole	236.74	236.74	
Target Catch, µg	ND	ND	ND
Concentration, mg/dscm [a]	ND	ND	ND
Concentration, ppbvd [b]	ND	ND	ND
Emission Rate, lb/test period [c]	ND	ND	ND
Emission Rate, lb/ton [d]	ND	ND	ND
Hydroquinone			
Molecular Weight, g/g-mole	110.11	110.11	
Target Catch, µg	ND	ND	ND
Concentration, mg/dscm [a]	ND	ND	ND
Concentration, ppbvd [b]	ND	ND	ND
Emission Rate, lb/test period [c]	ND	ND	ND
Emission Rate, lb/ton [d]	ND	ND	ND
Indeno(1,2,3-cd)pyrene			
Molecular Weight, g/g-mole	290.34	290.34	
Target Catch, µg	ND	ND	ND
Concentration, mg/dscm [a]	ND	ND	ND
Concentration, ppbvd [b]	ND	ND	ND
Emission Rate, lb/test period [c]	ND	ND	ND
Emission Rate, lb/ton [d]	ND	ND	ND
Isophorone			
Molecular Weight, g/g-mole	138.20	138.20	
Target Catch, µg	ND	ND	ND
Concentration, mg/dscm [a]	ND	ND	ND
Concentration, ppbvd [b]	ND	ND	ND
Emission Rate, lb/test period [c]	ND	ND	ND
Emission Rate, lb/ton [d]	ND	ND	ND
2-Methoxybenzenamine			
Molecular Weight, g/g-mole	123.15	123.15	
Target Catch, µg	ND	ND	ND
Concentration, mg/dscm [a]	ND	ND	ND
Concentration, ppbvd [b]	ND	ND	ND
Emission Rate, lb/test period [c]	ND	ND	ND
Emission Rate, lb/ton [d]	ND	ND	ND

Summary of Stack Gas Parameters and Test Results
Semi-volatile Organics - SW-846 Method 0010
Normal Operations, Tunnel Exhaust Duct
Asphalt Plant C - California

	T-MM5-2	T-MM5-3	Average
4,4'-Methyl-bis(2-chloroaniline)			
Molecular Weight, g/g-mole	267.16	267.16	
Target Catch, µg	ND	ND	ND
Concentration, mg/dscm [a]	ND	ND	ND
Concentration, ppbvd [b]	ND	ND	ND
Emission Rate, lb/test period [c]	ND	ND	ND
Emission Rate, lb/ton [d]	ND	ND	ND
2-Methylnaphthalene			
Molecular Weight, g/g-mole	142.20	142.20	
Target Catch, µg	60	74	67.0
Concentration, mg/dscm [a]	1.39E-02	1.68E-02	1.54E-02
Concentration, ppbvd [b]	2.36E+00	2.84E+00	2.60E+00
Emission Rate, lb/test period [c]	2.02E-03	2.51E-03	2.26E-03
Emission Rate, lb/ton [d]	1.36E-06	9.92E-07	1.18E-06
2-Methylphenol			
Molecular Weight, g/g-mole	108.13	108.13	
Target Catch, µg	ND	ND	ND
Concentration, mg/dscm [a]	ND	ND	ND
Concentration, ppbvd [b]	ND	ND	ND
Emission Rate, lb/test period [c]	ND	ND	ND
Emission Rate, lb/ton [d]	ND	ND	ND
3/4-Methylphenol			
Molecular Weight, g/g-mole	108.13	108.13	
Target Catch, µg	ND	ND	ND
Concentration, mg/dscm [a]	ND	ND	ND
Concentration, ppbvd [b]	ND	ND	ND
Emission Rate, lb/test period [c]	ND	ND	ND
Emission Rate, lb/ton [d]	ND	ND	ND
Naphthalene			
Molecular Weight, g/g-mole	128.16	128.16	
Target Catch, µg	ND	39	(19.5)
Concentration, mg/dscm [a]	ND	8.85E-03	(4.43E-03)
Concentration, ppbvd [b]	ND	1.66E+00	(8.31E-01)
Emission Rate, lb/test period [c]	ND	1.32E-03	(6.62E-04)
Emission Rate, lb/ton [d]	ND	5.23E-07	(2.61E-07)

Summary of Stack Gas Parameters and Test Results
Semi-volatile Organics - SW-846 Method 0010
Normal Operations, Tunnel Exhaust Duct
Asphalt Plant C - California

	T-MM5-2	T-MM5-3	Average
2-Nitroaniline			
Molecular Weight, g/g-mole	138.12	138.12	
Target Catch, µg	ND	ND	ND
Concentration, mg/dscm [a]	ND	ND	ND
Concentration, ppbvd [b]	ND	ND	ND
Emission Rate, lb/test period [c]	ND	ND	ND
Emission Rate, lb/ton [d]	ND	ND	ND
3-Nitroaniline			
Molecular Weight, g/g-mole	138.12	138.12	
Target Catch, µg	ND	ND	ND
Concentration, mg/dscm [a]	ND	ND	ND
Concentration, ppbvd [b]	ND	ND	ND
Emission Rate, lb/test period [c]	ND	ND	ND
Emission Rate, lb/ton [d]	ND	ND	ND
4-Nitroaniline			
Molecular Weight, g/g-mole	138.12	138.12	
Target Catch, µg	ND	ND	ND
Concentration, mg/dscm [a]	ND	ND	ND
Concentration, ppbvd [b]	ND	ND	ND
Emission Rate, lb/test period [c]	ND	ND	ND
Emission Rate, lb/ton [d]	ND	ND	ND
Nitrobenzene			
Molecular Weight, g/g-mole	123.11	123.11	
Target Catch, µg	ND	ND	ND
Concentration, mg/dscm [a]	ND	ND	ND
Concentration, ppbvd [b]	ND	ND	ND
Emission Rate, lb/test period [c]	ND	ND	ND
Emission Rate, lb/ton [d]	ND	ND	ND
4-Nitrodiphenyl			
Molecular Weight, g/g-mole	199.20	199.20	
Target Catch, µg	ND	ND	ND
Concentration, mg/dscm [a]	ND	ND	ND
Concentration, ppbvd [b]	ND	ND	ND
Emission Rate, lb/test period [c]	ND	ND	ND
Emission Rate, lb/ton [d]	ND	ND	ND

Summary of Stack Gas Parameters and Test Results
Semi-volatile Organics - SW-846 Method 0010
Normal Operations, Tunnel Exhaust Duct
Asphalt Plant C - California

	T-MM5-2	T-MM5-3	Average
2-Nitrophenol			
Molecular Weight, g/g-mole	139.11	139.11	
Target Catch, µg	ND	ND	ND
Concentration, mg/dscm [a]	ND	ND	ND
Concentration, ppbvd [b]	ND	ND	ND
Emission Rate, lb/test period [c]	ND	ND	ND
Emission Rate, lb/ton [d]	ND	ND	ND
4-Nitrophenol			
Molecular Weight, g/g-mole	139.11	139.11	
Target Catch, µg	ND	ND	ND
Concentration, mg/dscm [a]	ND	ND	ND
Concentration, ppbvd [b]	ND	ND	ND
Emission Rate, lb/test period [c]	ND	ND	ND
Emission Rate, lb/ton [d]	ND	ND	ND
N-Nitrosodimethylamine			
Molecular Weight, g/g-mole	74.08	74.08	
Target Catch, µg	ND	ND	ND
Concentration, mg/dscm [a]	ND	ND	ND
Concentration, ppbvd [b]	ND	ND	ND
Emission Rate, lb/test period [c]	ND	ND	ND
Emission Rate, lb/ton [d]	ND	ND	ND
N-Nitrosodiphenylamine			
Molecular Weight, g/g-mole	198.22	198.22	
Target Catch, µg	ND	ND	ND
Concentration, mg/dscm [a]	ND	ND	ND
Concentration, ppbvd [b]	ND	ND	ND
Emission Rate, lb/test period [c]	ND	ND	ND
Emission Rate, lb/ton [d]	ND	ND	ND
N-Nitroso-di-n-propylamine			
Molecular Weight, g/g-mole	130.19	130.19	
Target Catch, µg	ND	ND	ND
Concentration, mg/dscm [a]	ND	ND	ND
Concentration, ppbvd [b]	ND	ND	ND
Emission Rate, lb/test period [c]	ND	ND	ND
Emission Rate, lb/ton [d]	ND	ND	ND

Summary of Stack Gas Parameters and Test Results
Semi-volatile Organics - SW-846 Method 0010
Normal Operations, Tunnel Exhaust Duct
Asphalt Plant C - California

	T-MM5-2	T-MM5-3	Average
N-Nitrosomorpholine			
Molecular Weight, g/g-mole	116.11	116.11	
Target Catch, µg	ND	ND	ND
Concentration, mg/dscm [a]	ND	ND	ND
Concentration, ppbvd [b]	ND	ND	ND
Emission Rate, lb/test period [c]	ND	ND	ND
Emission Rate, lb/ton [d]	ND	ND	ND
2,2'-Oxybis(1-chloropropane)			
Molecular Weight, g/g-mole	171.07	171.07	
Target Catch, µg	ND	ND	ND
Concentration, mg/dscm [a]	ND	ND	ND
Concentration, ppbvd [b]	ND	ND	ND
Emission Rate, lb/test period [c]	ND	ND	ND
Emission Rate, lb/ton [d]	ND	ND	ND
Pentachloronitrobenzene (PCNB)			
Molecular Weight, g/g-mole	295.30	295.30	
Target Catch, µg	ND	ND	ND
Concentration, mg/dscm [a]	ND	ND	ND
Concentration, ppbvd [b]	ND	ND	ND
Emission Rate, lb/test period [c]	ND	ND	ND
Emission Rate, lb/ton [d]	ND	ND	ND
Pentachlorophenol			
Molecular Weight, g/g-mole	266.35	266.35	
Target Catch, µg	ND	ND	ND
Concentration, mg/dscm [a]	ND	ND	ND
Concentration, ppbvd [b]	ND	ND	ND
Emission Rate, lb/test period [c]	ND	ND	ND
Emission Rate, lb/ton [d]	ND	ND	ND
Phenanthrene			
Molecular Weight, g/g-mole	178.22	178.22	
Target Catch, µg	ND	ND	ND
Concentration, mg/dscm [a]	ND	ND	ND
Concentration, ppbvd [b]	ND	ND	ND
Emission Rate, lb/test period [c]	ND	ND	ND
Emission Rate, lb/ton [d]	ND	ND	ND

Summary of Stack Gas Parameters and Test Results
Semi-volatile Organics - SW-846 Method 0010
Normal Operations, Tunnel Exhaust Duct
Asphalt Plant C - California

	T-MM5-2	T-MM5-3	Average
Phenol			
Molecular Weight, g/g-mole	94.11	94.11	
Target Catch, µg	ND	53	(26.5)
Concentration, mg/dscm [a]	ND	1.20E-02	(6.02E-03)
Concentration, ppbvd [b]	ND	3.08E+00	(1.54E+00)
Emission Rate, lb/test period [c]	ND	1.80E-03	(8.99E-04)
Emission Rate, lb/ton [d]	ND	7.11E-07	(3.55E-07)
Pyrene			
Molecular Weight, g/g-mole	202.24	202.24	
Target Catch, µg	ND	ND	ND
Concentration, mg/dscm [a]	ND	ND	ND
Concentration, ppbvd [b]	ND	ND	ND
Emission Rate, lb/test period [c]	ND	ND	ND
Emission Rate, lb/ton [d]	ND	ND	ND
o-Toluidine			
Molecular Weight, g/g-mole	107.15	107.15	
Target Catch, µg	ND	ND	ND
Concentration, mg/dscm [a]	ND	ND	ND
Concentration, ppbvd [b]	ND	ND	ND
Emission Rate, lb/test period [c]	ND	ND	ND
Emission Rate, lb/ton [d]	ND	ND	ND
1,2,4-Trichlorobenzene			
Molecular Weight, g/g-mole	181.46	181.46	
Target Catch, µg	ND	ND	ND
Concentration, mg/dscm [a]	ND	ND	ND
Concentration, ppbvd [b]	ND	ND	ND
Emission Rate, lb/test period [c]	ND	ND	ND
Emission Rate, lb/ton [d]	ND	ND	ND
2,4,5-Trichlorophenol			
Molecular Weight, g/g-mole	197.46	197.46	
Target Catch, µg	ND	ND	ND
Concentration, mg/dscm [a]	ND	ND	ND
Concentration, ppbvd [b]	ND	ND	ND
Emission Rate, lb/test period [c]	ND	ND	ND
Emission Rate, lb/ton [d]	ND	ND	ND

Summary of Stack Gas Parameters and Test Results
Semi-volatile Organics - SW-846 Method 0010
Normal Operations, Tunnel Exhaust Duct
Asphalt Plant C - California

	T-MM5-2	T-MM5-3	Average
2,4,6-Trichlorophenol			
Molecular Weight, g/g-mole	197.46	197.46	
Target Catch, µg	ND	ND	ND
Concentration, mg/dscm [a]	ND	ND	ND
Concentration, ppbvd [b]	ND	ND	ND
Emission Rate, lb/test period [c]	ND	ND	ND
Emission Rate, lb/ton [d]	ND	ND	ND
Trifluralin			
Molecular Weight, g/g-mole	335.29	335.29	
Target Catch, µg	ND	ND	ND
Concentration, mg/dscm [a]	ND	ND	ND
Concentration, ppbvd [b]	ND	ND	ND
Emission Rate, lb/test period [c]	ND	ND	ND
Emission Rate, lb/ton [d]	ND	ND	ND

[a] Milligrams per dry standard cubic meter at 68° F (20° C) and 1 atm.

[b] Parts per billion by volume.

[c] Pounds per test period.

[d] Pounds per ton of asphalt loaded.

ND Not Detectable - Results are below target analyte detection limit. Values are counted as zero (0) in averages.

Summary of Stack Gas Parameters and Test Results
Semi-volatile Organics - SW-846 Method 0010
Background Condition, Tunnel Exhaust Duct
Asphalt Plant C - California

	RUN NUMBER	**T-MM5-4**
	RUN DATE	**7/26/98**
	RUN TIME	**0925-1343**
	MEASURED DATA	
γ	Meter Box Correction Factor	1.000
ΔH	Avg Meter Orifice Pressure, in. H_2O	1.85
P_{bar}	Barometric Pressure, inches Hg	29.31
V_m	Sample Volume, ft^3	179.672
T_m	Average Meter Temperature, °F	91
P_{static}	Stack Static Pressure, inches H_2O	-4.9
T_s	Average Stack Temperature, °F	87
V_{lc}	Condensate Collected, ml	132.9
CO_2	Carbon Dioxide content, % by volume	0.0
O_2	Oxygen content, % by volume	20.9
N_2	Nitrogen content, % by volume	79.1
C_p	Pitot Tube Coefficient	0.84
$\Delta p^{1/2}$	Average Square Root Δp, (in. $H_2O)^{1/2}$	0.6108
Θ	Sample Run Duration, minutes	240
D_n	Nozzle Diameter, inches	0.252
	Tons of Asphalt loaded per hour	none
	CALCULATED DATA	
A_n	Nozzle Area, ft^2	0.000346
$V_{m(std)}$	Standard Meter Volume, dscf	169.391
$V_{m(std)}$	Standard Meter Volume, dscm	4.797
P_s	Stack Pressure, inches Hg	28.95
B_{ws}	Moisture, % by volume	3.6
V_{wstd}	Standard Water Vapor Volume, ft^3	6.256
$1-B_{ws}$	Dry Mole Fraction	0.964
M_d	Molecular Weight (d.b.), lb/lb•mole	28.84
M_s	Molecular Weight (w.b.), lb/lb•mole	28.45
V_s	Stack Gas Velocity, ft/s	35.8
A	Stack Area, ft^2	5.59
Q_a	Stack Gas Volumetric flow, acfm	11,981
Q_s	Stack Gas Volumetric flow, dscfm	10,784
$Q_{s(cmm)}$	Stack Gas Volumetric flow, dscmm	305
I	Isokinetic Sampling Ratio, %	105.6

Summary of Stack Gas Parameters and Test Results
Semi-volatile Organics - SW-846 Method 0010
Background Condition, Tunnel Exhaust Duct
Asphalt Plant C - California

	T-MM5-4
Acenaphthene	
Molecular Weight, g/g-mole	154.21
Target Catch, µg	ND
Concentration, mg/dscm [a]	ND
Concentration, ppbvd [b]	ND
Emission Rate, lb/test period [c]	ND
Acenaphthylene	
Molecular Weight, g/g-mole	154.21
Target Catch, µg	ND
Concentration, mg/dscm [a]	ND
Concentration, ppbvd [b]	ND
Emission Rate, lb/test period [c]	ND
Acetophenone	
Molecular Weight, g/g-mole	120.15
Target Catch, µg	ND
Concentration, mg/dscm [a]	ND
Concentration, ppbvd [b]	ND
Emission Rate, lb/test period [c]	ND
4-Aminobiphenyl	
Molecular Weight, g/g-mole	169.22
Target Catch, µg	ND
Concentration, mg/dscm [a]	ND
Concentration, ppbvd [b]	ND
Emission Rate, lb/test period [c]	ND
Aniline	
Molecular Weight, g/g-mole	93.12
Target Catch, µg	ND
Concentration, mg/dscm [a]	ND
Concentration, ppbvd [b]	ND
Emission Rate, lb/test period [c]	ND
Anthracene	
Molecular Weight, g/g-mole	178.22
Target Catch, µg	ND
Concentration, mg/dscm [a]	ND
Concentration, ppbvd [b]	ND
Emission Rate, lb/test period [c]	ND

Summary of Stack Gas Parameters and Test Results
Semi-volatile Organics - SW-846 Method 0010
Background Condition, Tunnel Exhaust Duct
Asphalt Plant C - California

	T-MM5-4
Benzidine	
Molecular Weight, g/g-mole	184.23
Target Catch, µg	ND
Concentration, mg/dscm [a]	ND
Concentration, ppbvd [b]	ND
Emission Rate, lb/test period [c]	ND
Benzo(a)anthracene	
Molecular Weight, g/g-mole	228.29
Target Catch, µg	ND
Concentration, mg/dscm [a]	ND
Concentration, ppbvd [b]	ND
Emission Rate, lb/test period [c]	ND
Benzo(b)fluoranthene	
Molecular Weight, g/g-mole	252.32
Target Catch, µg	ND
Concentration, mg/dscm [a]	ND
Concentration, ppbvd [b]	ND
Emission Rate, lb/test period [c]	ND
Benzo(k)fluoranthene	
Molecular Weight, g/g-mole	252.32
Target Catch, µg	ND
Concentration, mg/dscm [a]	ND
Concentration, ppbvd [b]	ND
Emission Rate, lb/test period [c]	ND
Benzoic acid	
Molecular Weight, g/g-mole	122.12
Target Catch, µg	ND
Concentration, mg/dscm [a]	ND
Concentration, ppbvd [b]	ND
Emission Rate, lb/test period [c]	ND
Benzo(g,h,i)perylene	
Molecular Weight, g/g-mole	276.34
Target Catch, µg	ND
Concentration, mg/dscm [a]	ND
Concentration, ppbvd [b]	ND
Emission Rate, lb/test period [c]	ND

Summary of Stack Gas Parameters and Test Results
Semi-volatile Organics - SW-846 Method 0010
Background Condition, Tunnel Exhaust Duct
Asphalt Plant C - California

	T-MM5-4
Benzo(a)pyrene	
Molecular Weight, g/g-mole	252.30
Target Catch, µg	ND
Concentration, mg/dscm [a]	ND
Concentration, ppbvd [b]	ND
Emission Rate, lb/test period [c]	ND
Benzo(e)pyrene	
Molecular Weight, g/g-mole	252.30
Target Catch, µg	ND
Concentration, mg/dscm [a]	ND
Concentration, ppbvd [b]	ND
Emission Rate, lb/test period [c]	ND
Benzyl alcohol	
Molecular Weight, g/g-mole	108.13
Target Catch, µg	ND
Concentration, mg/dscm [a]	ND
Concentration, ppbvd [b]	ND
Emission Rate, lb/test period [c]	ND
Biphenyl	
Molecular Weight, g/g-mole	154.20
Target Catch, µg	ND
Concentration, mg/dscm [a]	ND
Concentration, ppbvd [b]	ND
Emission Rate, lb/test period [c]	ND
4-Bromophenyl phenyl ether	
Molecular Weight, g/g-mole	249.11
Target Catch, µg	ND
Concentration, mg/dscm [a]	ND
Concentration, ppbvd [b]	ND
Emission Rate, lb/test period [c]	ND
Butyl benzyl phthalate	
Molecular Weight, g/g-mole	312.36
Target Catch, µg	ND
Concentration, mg/dscm [a]	ND
Concentration, ppbvd [b]	ND
Emission Rate, lb/test period [c]	ND

Summary of Stack Gas Parameters and Test Results
Semi-volatile Organics - SW-846 Method 0010
Background Condition, Tunnel Exhaust Duct
Asphalt Plant C - California

	T-MM5-4
Chloroacetophenone	
Molecular Weight, g/g-mole	154.59
Target Catch, µg	ND
Concentration, mg/dscm [a]	ND
Concentration, ppbvd [b]	ND
Emission Rate, lb/test period [c]	ND
4-Chloroaniline	
Molecular Weight, g/g-mole	127.57
Target Catch, µg	ND
Concentration, mg/dscm [a]	ND
Concentration, ppbvd [b]	ND
Emission Rate, lb/test period [c]	ND
bis(2-Chloroethoxy)-methane	
Molecular Weight, g/g-mole	173.04
Target Catch, µg	ND
Concentration, mg/dscm [a]	ND
Concentration, ppbvd [b]	ND
Emission Rate, lb/test period [c]	ND
bis(2-Chloroethyl) ether	
Molecular Weight, g/g-mole	143.02
Target Catch, µg	ND
Concentration, mg/dscm [a]	ND
Concentration, ppbvd [b]	ND
Emission Rate, lb/test period [c]	ND
4-Chloro-3-methylphenol	
Molecular Weight, g/g-mole	142.58
Target Catch, µg	ND
Concentration, mg/dscm [a]	ND
Concentration, ppbvd [b]	ND
Emission Rate, lb/test period [c]	ND
2-Chloronaphthalene	
Molecular Weight, g/g-mole	162.61
Target Catch, µg	ND
Concentration, mg/dscm [a]	ND
Concentration, ppbvd [b]	ND
Emission Rate, lb/test period [c]	ND

46

Summary of Stack Gas Parameters and Test Results
Semi-volatile Organics - SW-846 Method 0010
Background Condition, Tunnel Exhaust Duct
Asphalt Plant C - California

	T-MM5-4
2-Chlorophenol	
Molecular Weight, g/g-mole	128.56
Target Catch, µg	ND
Concentration, mg/dscm [a]	ND
Concentration, ppbvd [b]	ND
Emission Rate, lb/test period [c]	ND
4-Chlorophenyl phenyl ether	
Molecular Weight, g/g-mole	204.66
Target Catch, µg	ND
Concentration, mg/dscm [a]	ND
Concentration, ppbvd [b]	ND
Emission Rate, lb/test period [c]	ND
Chrysene	
Molecular Weight, g/g-mole	228.28
Target Catch, µg	ND
Concentration, mg/dscm [a]	ND
Concentration, ppbvd [b]	ND
Emission Rate, lb/test period [c]	ND
Cumene	
Molecular Weight, g/g-mole	120.19
Target Catch, µg	ND
Concentration, mg/dscm [a]	ND
Concentration, ppbvd [b]	ND
Emission Rate, lb/test period [c]	ND
Dibenz(a,h)anthracene	
Molecular Weight, g/g-mole	278.33
Target Catch, µg	ND
Concentration, mg/dscm [a]	ND
Concentration, ppbvd [b]	ND
Emission Rate, lb/test period [c]	ND
Dibenzofuran	
Molecular Weight, g/g-mole	168.20
Target Catch, µg	ND
Concentration, mg/dscm [a]	ND
Concentration, ppbvd [b]	ND
Emission Rate, lb/test period [c]	ND

Summary of Stack Gas Parameters and Test Results
Semi-volatile Organics - SW-846 Method 0010
Background Condition, Tunnel Exhaust Duct
Asphalt Plant C - California

	T-MM5-4
1,2-Dibromo-3-chloropropane (DBCP)	
Molecular Weight, g/g-mole	236.36
Target Catch, µg	ND
Concentration, mg/dscm [a]	ND
Concentration, ppbvd [b]	ND
Emission Rate, lb/test period [c]	ND
Di-n-butyl phthalate	
Molecular Weight, g/g-mole	278.34
Target Catch, µg	ND
Concentration, mg/dscm [a]	ND
Concentration, ppbvd [b]	ND
Emission Rate, lb/test period [c]	ND
1,2-Dichlorobenzene	
Molecular Weight, g/g-mole	147.01
Target Catch, µg	ND
Concentration, mg/dscm [a]	ND
Concentration, ppbvd [b]	ND
Emission Rate, lb/test period [c]	ND
1,3-Dichlorobenzene	
Molecular Weight, g/g-mole	147.01
Target Catch, µg	ND
Concentration, mg/dscm [a]	ND
Concentration, ppbvd [b]	ND
Emission Rate, lb/test period [c]	ND
1,4-Dichlorobenzene	
Molecular Weight, g/g-mole	147.01
Target Catch, µg	ND
Concentration, mg/dscm [a]	ND
Concentration, ppbvd [b]	ND
Emission Rate, lb/test period [c]	ND
3,3'-Dichlorobenzidine	
Molecular Weight, g/g-mole	253.13
Target Catch, µg	ND
Concentration, mg/dscm [a]	ND
Concentration, ppbvd [b]	ND
Emission Rate, lb/test period [c]	ND

Summary of Stack Gas Parameters and Test Results
Semi-volatile Organics - SW-846 Method 0010
Background Condition, Tunnel Exhaust Duct
Asphalt Plant C - California

	T-MM5-4
2,4-Dichlorophenol	
Molecular Weight, g/g-mole	163.01
Target Catch, µg	ND
Concentration, mg/dscm [a]	ND
Concentration, ppbvd [b]	ND
Emission Rate, lb/test period [c]	ND
Diethyl phthalate	
Molecular Weight, g/g-mole	222.24
Target Catch, µg	ND
Concentration, mg/dscm [a]	ND
Concentration, ppbvd [b]	ND
Emission Rate, lb/test period [c]	ND
N-N-Diethylaniline	
Molecular Weight, g/g-mole	149.23
Target Catch, µg	ND
Concentration, mg/dscm [a]	ND
Concentration, ppbvd [b]	ND
Emission Rate, lb/test period [c]	ND
3,3'-Dimethoxybenzidine	
Molecular Weight, g/g-mole	244.28
Target Catch, µg	ND
Concentration, mg/dscm [a]	ND
Concentration, ppbvd [b]	ND
Emission Rate, lb/test period [c]	ND
Dimethyl phthalate	
Molecular Weight, g/g-mole	194.19
Target Catch, µg	ND
Concentration, mg/dscm [a]	ND
Concentration, ppbvd [b]	ND
Emission Rate, lb/test period [c]	ND
Dimethylaniline	
Molecular Weight, g/g-mole	121.18
Target Catch, µg	ND
Concentration, mg/dscm [a]	ND
Concentration, ppbvd [b]	ND
Emission Rate, lb/test period [c]	ND

Summary of Stack Gas Parameters and Test Results
Semi-volatile Organics - SW-846 Method 0010
Background Condition, Tunnel Exhaust Duct
Asphalt Plant C - California

	T-MM5-4
3,3'-Dimethylbenzidine	
Molecular Weight, g/g-mole	212.28
Target Catch, µg	ND
Concentration, mg/dscm [a]	ND
Concentration, ppbvd [b]	ND
Emission Rate, lb/test period [c]	ND
2,4-Dimethylphenol	
Molecular Weight, g/g-mole	122.17
Target Catch, µg	ND
Concentration, mg/dscm [a]	ND
Concentration, ppbvd [b]	ND
Emission Rate, lb/test period [c]	ND
4,6-Dinitro-2-methylphenol	
Molecular Weight, g/g-mole	198.13
Target Catch, µg	ND
Concentration, mg/dscm [a]	ND
Concentration, ppbvd [b]	ND
Emission Rate, lb/test period [c]	ND
2,4-Dinitrophenol	
Molecular Weight, g/g-mole	184.11
Target Catch, µg	ND
Concentration, mg/dscm [a]	ND
Concentration, ppbvd [b]	ND
Emission Rate, lb/test period [c]	ND
2,4-Dinitrotoluene	
Molecular Weight, g/g-mole	182.14
Target Catch, µg	ND
Concentration, mg/dscm [a]	ND
Concentration, ppbvd [b]	ND
Emission Rate, lb/test period [c]	ND
2,6-Dinitrotoluene	
Molecular Weight, g/g-mole	182.14
Target Catch, µg	ND
Concentration, mg/dscm [a]	ND
Concentration, ppbvd [b]	ND
Emission Rate, lb/test period [c]	ND

Summary of Stack Gas Parameters and Test Results
Semi-volatile Organics - SW-846 Method 0010
Background Condition, Tunnel Exhaust Duct
Asphalt Plant C - California

	T-MM5-4
Di-n-octyl phthalate	
Molecular Weight, g/g-mole	390.56
Target Catch, µg	ND
Concentration, mg/dscm [a]	ND
Concentration, ppbvd [b]	ND
Emission Rate, lb/test period [c]	ND
bis(2-Ethylhexyl)-phthalate	
Molecular Weight, g/g-mole	390.54
Target Catch, µg	ND
Concentration, mg/dscm [a]	ND
Concentration, ppbvd [b]	ND
Emission Rate, lb/test period [c]	ND
Fluoranthene	
Molecular Weight, g/g-mole	202.26
Target Catch, µg	ND
Concentration, mg/dscm [a]	ND
Concentration, ppbvd [b]	ND
Emission Rate, lb/test period [c]	ND
Fluorene	
Molecular Weight, g/g-mole	166.21
Target Catch, µg	ND
Concentration, mg/dscm [a]	ND
Concentration, ppbvd [b]	ND
Emission Rate, lb/test period [c]	ND
Hexachlorobenzene	
Molecular Weight, g/g-mole	284.80
Target Catch, µg	ND
Concentration, mg/dscm [a]	ND
Concentration, ppbvd [b]	ND
Emission Rate, lb/test period [c]	ND
Hexachlorobutadiene	
Molecular Weight, g/g-mole	154.21
Target Catch, µg	ND
Concentration, mg/dscm [a]	ND
Concentration, ppbvd [b]	ND
Emission Rate, lb/test period [c]	ND

Summary of Stack Gas Parameters and Test Results
Semi-volatile Organics - SW-846 Method 0010
Background Condition, Tunnel Exhaust Duct
Asphalt Plant C - California

	T-MM5-4
Hexachlorocyclopentadiene	
Molecular Weight, g/g-mole	272.77
Target Catch, µg	ND
Concentration, mg/dscm [a]	ND
Concentration, ppbvd [b]	ND
Emission Rate, lb/test period [c]	ND
Hexachloroethane	
Molecular Weight, g/g-mole	236.74
Target Catch, µg	ND
Concentration, mg/dscm [a]	ND
Concentration, ppbvd [b]	ND
Emission Rate, lb/test period [c]	ND
Hydroquinone	
Molecular Weight, g/g-mole	110.11
Target Catch, µg	ND
Concentration, mg/dscm [a]	ND
Concentration, ppbvd [b]	ND
Emission Rate, lb/test period [c]	ND
Indeno(1,2,3-cd)pyrene	
Molecular Weight, g/g-mole	290.34
Target Catch, µg	ND
Concentration, mg/dscm [a]	ND
Concentration, ppbvd [b]	ND
Emission Rate, lb/test period [c]	ND
Isophorone	
Molecular Weight, g/g-mole	138.20
Target Catch, µg	ND
Concentration, mg/dscm [a]	ND
Concentration, ppbvd [b]	ND
Emission Rate, lb/test period [c]	ND
2-Methoxybenzenamine	
Molecular Weight, g/g-mole	123.15
Target Catch, µg	ND
Concentration, mg/dscm [a]	ND
Concentration, ppbvd [b]	ND
Emission Rate, lb/test period [c]	ND

Summary of Stack Gas Parameters and Test Results
Semi-volatile Organics - SW-846 Method 0010
Background Condition, Tunnel Exhaust Duct
Asphalt Plant C - California

	T-MM5-4
4,4'-Methyl-bis(2-chloroaniline)	
Molecular Weight, g/g-mole	267.16
Target Catch, µg	ND
Concentration, mg/dscm [a]	ND
Concentration, ppbvd [b]	ND
Emission Rate, lb/test period [c]	ND
2-Methylnaphthalene	
Molecular Weight, g/g-mole	142.20
Target Catch, µg	ND
Concentration, mg/dscm [a]	ND
Concentration, ppbvd [b]	ND
Emission Rate, lb/test period [c]	ND
2-Methylphenol	
Molecular Weight, g/g-mole	108.13
Target Catch, µg	ND
Concentration, mg/dscm [a]	ND
Concentration, ppbvd [b]	ND
Emission Rate, lb/test period [c]	ND
3/4-Methylphenol	
Molecular Weight, g/g-mole	108.13
Target Catch, µg	ND
Concentration, mg/dscm [a]	ND
Concentration, ppbvd [b]	ND
Emission Rate, lb/test period [c]	ND
Naphthalene	
Molecular Weight, g/g-mole	128.16
Target Catch, µg	ND
Concentration, mg/dscm [a]	ND
Concentration, ppbvd [b]	ND
Emission Rate, lb/test period [c]	ND
2-Nitroaniline	
Molecular Weight, g/g-mole	138.12
Target Catch, µg	ND
Concentration, mg/dscm [a]	ND
Concentration, ppbvd [b]	ND
Emission Rate, lb/test period [c]	ND

Summary of Stack Gas Parameters and Test Results
Semi-volatile Organics - SW-846 Method 0010
Background Condition, Tunnel Exhaust Duct
Asphalt Plant C - California

	T-MM5-4
3-Nitroaniline	
Molecular Weight, g/g-mole	138.12
Target Catch, µg	ND
Concentration, mg/dscm [a]	ND
Concentration, ppbvd [b]	ND
Emission Rate, lb/test period [c]	ND
4-Nitroaniline	
Molecular Weight, g/g-mole	138.12
Target Catch, µg	ND
Concentration, mg/dscm [a]	ND
Concentration, ppbvd [b]	ND
Emission Rate, lb/test period [c]	ND
Nitrobenzene	
Molecular Weight, g/g-mole	123.11
Target Catch, µg	ND
Concentration, mg/dscm [a]	ND
Concentration, ppbvd [b]	ND
Emission Rate, lb/test period [c]	ND
4-Nitrodiphenyl	
Molecular Weight, g/g-mole	199.20
Target Catch, µg	ND
Concentration, mg/dscm [a]	ND
Concentration, ppbvd [b]	ND
Emission Rate, lb/test period [c]	ND
2-Nitrophenol	
Molecular Weight, g/g-mole	139.11
Target Catch, µg	ND
Concentration, mg/dscm [a]	ND
Concentration, ppbvd [b]	ND
Emission Rate, lb/test period [c]	ND
4-Nitrophenol	
Molecular Weight, g/g-mole	139.11
Target Catch, µg	ND
Concentration, mg/dscm [a]	ND
Concentration, ppbvd [b]	ND
Emission Rate, lb/test period [c]	ND

Summary of Stack Gas Parameters and Test Results
Semi-volatile Organics - SW-846 Method 0010
Background Condition, Tunnel Exhaust Duct
Asphalt Plant C - California

	T-MM5-4
N-Nitrosodimethylamine	
Molecular Weight, g/g-mole	74.08
Target Catch, µg	ND
Concentration, mg/dscm [a]	ND
Concentration, ppbvd [b]	ND
Emission Rate, lb/test period [c]	ND
N-Nitrosodiphenylamine	
Molecular Weight, g/g-mole	198.22
Target Catch, µg	ND
Concentration, mg/dscm [a]	ND
Concentration, ppbvd [b]	ND
Emission Rate, lb/test period [c]	ND
N-Nitroso-di-n-propylamine	
Molecular Weight, g/g-mole	130.19
Target Catch, µg	ND
Concentration, mg/dscm [a]	ND
Concentration, ppbvd [b]	ND
Emission Rate, lb/test period [c]	ND
N-Nitrosomorpholine	
Molecular Weight, g/g-mole	116.11
Target Catch, µg	ND
Concentration, mg/dscm [a]	ND
Concentration, ppbvd [b]	ND
Emission Rate, lb/test period [c]	ND
2,2'-Oxybis(1-chloropropane)	
Molecular Weight, g/g-mole	171.07
Target Catch, µg	ND
Concentration, mg/dscm [a]	ND
Concentration, ppbvd [b]	ND
Emission Rate, lb/test period [c]	ND
Pentachloronitrobenzene (PCNB)	
Molecular Weight, g/g-mole	295.30
Target Catch, µg	ND
Concentration, mg/dscm [a]	ND
Concentration, ppbvd [b]	ND
Emission Rate, lb/test period [c]	ND

Summary of Stack Gas Parameters and Test Results
Semi-volatile Organics - SW-846 Method 0010
Background Condition, Tunnel Exhaust Duct
Asphalt Plant C - California

	T-MM5-4
Pentachlorophenol	
Molecular Weight, g/g-mole	266.35
Target Catch, µg	ND
Concentration, mg/dscm [a]	ND
Concentration, ppbvd [b]	ND
Emission Rate, lb/test period [c]	ND
Phenanthrene	
Molecular Weight, g/g-mole	178.22
Target Catch, µg	ND
Concentration, mg/dscm [a]	ND
Concentration, ppbvd [b]	ND
Emission Rate, lb/test period [c]	ND
Phenol	
Molecular Weight, g/g-mole	94.11
Target Catch, µg	ND
Concentration, mg/dscm [a]	ND
Concentration, ppbvd [b]	ND
Emission Rate, lb/test period [c]	ND
Pyrene	
Molecular Weight, g/g-mole	202.24
Target Catch, µg	ND
Concentration, mg/dscm [a]	ND
Concentration, ppbvd [b]	ND
Emission Rate, lb/test period [c]	ND
o-Toluidine	
Molecular Weight, g/g-mole	107.15
Target Catch, µg	ND
Concentration, mg/dscm [a]	ND
Concentration, ppbvd [b]	ND
Emission Rate, lb/test period [c]	ND
1,2,4-Trichlorobenzene	
Molecular Weight, g/g-mole	181.46
Target Catch, µg	ND
Concentration, mg/dscm [a]	ND
Concentration, ppbvd [b]	ND
Emission Rate, lb/test period [c]	ND

Summary of Stack Gas Parameters and Test Results
Semi-volatile Organics - SW-846 Method 0010
Background Condition, Tunnel Exhaust Duct
Asphalt Plant C - California

	T-MM5-4
2,4,5-Trichlorophenol	
Molecular Weight, g/g-mole	197.46
Target Catch, µg	ND
Concentration, mg/dscm [a]	ND
Concentration, ppbvd [b]	ND
Emission Rate, lb/test period [c]	ND
2,4,6-Trichlorophenol	
Molecular Weight, g/g-mole	197.46
Target Catch, µg	ND
Concentration, mg/dscm [a]	ND
Concentration, ppbvd [b]	ND
Emission Rate, lb/test period [c]	ND
Trifluralin	
Molecular Weight, g/g-mole	335.29
Target Catch, µg	ND
Concentration, mg/dscm [a]	ND
Concentration, ppbvd [b]	ND
Emission Rate, lb/test period [c]	ND

[a] Milligrams per dry standard cubic meter at 68° F (20° C) and 1 atm.

[b] Parts per billion by volume.

[c] Pounds per test period.

ND Not Detectable - Results are below target analyte detection limit.

Summary of Stack Gas Parameters and Test Results
Volatile Organics - SW-846 Method 0030
Normal Operations, Tunnel Exhaust Duct
Asphalt Plant C - California

	Run Number	T-V-1-1	T-V-1-2	T-V-1-3	TOTAL
	Run Date	7/24/98	7/24/98	7/24/98	
	Run Time	0829-0849	0910-0945	1058-1133	
	Net Run Time	20	35	34.9	89.9
P_{bar}	Barometric Pressure, inches Hg	29.35	29.35	29.35	
γ	Dry Gas Meter calibration factor	0.967	0.967	0.9995	
V_m	Sample Volume, liters	15.600	20.119	20.160	
T_m	Avg. Meter temperature, °R	532	537	539.7	
ΔH	Pressure diff. of meter, in. H_2O	1.20	1.10	1.73	
$V_{m(std)}$	Sample Volume, dry std. liters	14.738	18.821	19.423	52.982
Q_s	Volumetric Flow Rate, dscfm	10,295	10,295	10,295	10,295
	Tons of asphalt per test period	169.9	262.3	276.9	709.1
Acetone					
	Molecular Weight, g/g-mole	58.08	58.08	58.08	58.08
	Target Catch, µg	0.137	{0.243}	0.666	{1.046}
	Concentration, mg/dscm				{1.97E-02}
	Concentration, ppbvd				{8.18}
	Emission Rate, lb/test period				{1.14E-03}
	Emission Rate, lb/ton				{1.61E-06}
Acrylonitrile					
	Molecular Weight, g/g-mole	53.06	53.06	53.06	53.06
	Target Catch, µg	ND	ND	ND	ND
	Concentration, mg/dscm				ND
	Concentration, ppbvd				ND
	Emission Rate, lb/test period				ND
	Emission Rate, lb/ton				ND
Allyl chloride					
	Molecular Weight, g/g-mole	76.53	76.53	76.53	76.53
	Target Catch, µg	ND	ND	ND	ND
	Concentration, mg/dscm				ND
	Concentration, ppbvd				ND
	Emission Rate, lb/test period				ND
	Emission Rate, lb/ton				ND

Summary of Stack Gas Parameters and Test Results
Volatile Organics - SW-846 Method 0030
Normal Operations, Tunnel Exhaust Duct
Asphalt Plant C - California

Run Number	T-V-1-1	T-V-1-2	T-V-1-3	TOTAL
Benzene				
Molecular Weight, g/g-mole	78.11	78.11	78.11	78.11
Target Catch, µg	0.106	0.129	0.516	0.751
Concentration, mg/dscm				1.42E-02
Concentration, ppbvd				4.37
Emission Rate, lb/test period				8.19E-04
Emission Rate, lb/ton				1.16E-06
Bromodichloromethane				
Molecular Weight, g/g-mole	163.82	163.82	163.82	163.82
Target Catch, µg	ND	ND	ND	ND
Concentration, mg/dscm				ND
Concentration, ppbvd				ND
Emission Rate, lb/test period				ND
Emission Rate, lb/ton				ND
Bromoform				
Molecular Weight, g/g-mole	252.77	252.77	252.77	252.77
Target Catch, µg	ND	ND	ND	ND
Concentration, mg/dscm				ND
Concentration, ppbvd				ND
Emission Rate, lb/test period				ND
Emission Rate, lb/ton				ND
Bromomethane				
Molecular Weight, g/g-mole	94.95	94.95	94.95	94.95
Target Catch, µg	0.056	{0.075}	{0.114}	{0.245}
Concentration, mg/dscm				{4.62E-03}
Concentration, ppbvd				{1.17}
Emission Rate, lb/test period				{2.67E-04}
Emission Rate, lb/ton				{3.77E-07}
1,3-Butadiene				
Molecular Weight, g/g-mole	58.08	58.08	58.08	58.08
Target Catch, µg	ND	ND	ND	ND
Concentration, mg/dscm				ND
Concentration, ppbvd				ND
Emission Rate, lb/test period				ND
Emission Rate, lb/ton				ND

Summary of Stack Gas Parameters and Test Results
Volatile Organics - SW-846 Method 0030
Normal Operations, Tunnel Exhaust Duct
Asphalt Plant C - California

Run Number	T-V-1-1	T-V-1-2	T-V-1-3	TOTAL
2-Butanone				
Molecular Weight, g/g-mole	72.10	72.10	72.10	72.10
Target Catch, µg	0.061	ND	0.509	(0.570)
Concentration, mg/dscm				(1.08E-02)
Concentration, ppbvd				(3.59)
Emission Rate, lb/test period				(6.22E-04)
Emission Rate, lb/ton				(8.77E-07)
Carbon disulfide				
Molecular Weight, g/g-mole	76.14	76.14	76.14	76.14
Target Catch, µg	{0.015}	{0.017}	{0.018}	{0.050}
Concentration, mg/dscm				{9.44E-04}
Concentration, ppbvd				{0.298}
Emission Rate, lb/test period				{5.45E-05}
Emission Rate, lb/ton				{7.69E-08}
Carbon tetrachloride				
Molecular Weight, g/g-mole	153.84	153.84	153.84	153.84
Target Catch, µg	ND	ND	ND	ND
Concentration, mg/dscm				ND
Concentration, ppbvd				ND
Emission Rate, lb/test period				ND
Emission Rate, lb/ton				ND
Chlorobenzene				
Molecular Weight, g/g-mole	112.56	112.56	112.56	112.56
Target Catch, µg	ND	ND	ND	ND
Concentration, mg/dscm				ND
Concentration, ppbvd				ND
Emission Rate, lb/test period				ND
Emission Rate, lb/ton				ND
Chloroethane				
Molecular Weight, g/g-mole	64.52	64.52	64.52	64.52
Target Catch, µg	ND	ND	{0.007}	(0.007)
Concentration, mg/dscm				(1.32E-04)
Concentration, ppbvd				(0.0493)
Emission Rate, lb/test period				{7.63E-06}
Emission Rate, lb/ton				(1.08E-08)

Summary of Stack Gas Parameters and Test Results
Volatile Organics - SW-846 Method 0030
Normal Operations, Tunnel Exhaust Duct
Asphalt Plant C - California

Run Number	T-V-1-1	T-V-1-2	T-V-1-3	TOTAL
Chloroform				
Molecular Weight, g/g-mole	119.39	119.39	119.39	119.39
Target Catch, µg	ND	ND	ND	ND
Concentration, mg/dscm				ND
Concentration, ppbvd				ND
Emission Rate, lb/test period				ND
Emission Rate, lb/ton				ND
Chloromethane				
Molecular Weight, g/g-mole	50.49	50.49	50.49	50.49
Target Catch, µg	0.075	0.080	0.083	0.238
Concentration, mg/dscm				4.49E-03
Concentration, ppbvd				2.14
Emission Rate, lb/test period				2.60E-04
Emission Rate, lb/ton				3.66E-07
Cumene				
Molecular Weight, g/g-mole	120.19	120.19	120.19	120.19
Target Catch, µg	ND	ND	ND	ND
Concentration, mg/dscm				ND
Concentration, ppbvd				ND
Emission Rate, lb/test period				ND
Emission Rate, lb/ton				ND
Dibromochloromethane				
Molecular Weight, g/g-mole	208.27	208.27	208.27	208.27
Target Catch, µg	ND	ND	ND	ND
Concentration, mg/dscm				ND
Concentration, ppbvd				ND
Emission Rate, lb/test period				ND
Emission Rate, lb/ton				ND
1,2-Dibromoethane				
Molecular Weight, g/g-mole	187.88	187.88	187.88	187.88
Target Catch, µg	ND	ND	ND	ND
Concentration, mg/dscm				ND
Concentration, ppbvd				ND
Emission Rate, lb/test period				ND
Emission Rate, lb/ton				ND

Summary of Stack Gas Parameters and Test Results
Volatile Organics - SW-846 Method 0030
Normal Operations, Tunnel Exhaust Duct
Asphalt Plant C - California

Run Number	T-V-1-1	T-V-1-2	T-V-1-3	TOTAL
1,1-Dichloroethane				
Molecular Weight, g/g-mole	98.97	98.97	98.97	98.97
Target Catch, µg	ND	ND	ND	ND
Concentration, mg/dscm				ND
Concentration, ppbvd				ND
Emission Rate, lb/test period				ND
Emission Rate, lb/ton				ND
1,2-Dichloroethane				
Molecular Weight, g/g-mole	98.96	98.96	98.96	98.96
Target Catch, µg	ND	ND	ND	ND
Concentration, mg/dscm				ND
Concentration, ppbvd				ND
Emission Rate, lb/test period				ND
Emission Rate, lb/ton				ND
1,1-Dichloroethene				
Molecular Weight, g/g-mole	96.95	96.95	96.95	96.95
Target Catch, µg	ND	ND	ND	ND
Concentration, mg/dscm				ND
Concentration, ppbvd				ND
Emission Rate, lb/test period				ND
Emission Rate, lb/ton				ND
cis-1,2-Dichloroethene				
Molecular Weight, g/g-mole	96.95	96.95	96.95	96.95
Target Catch, µg	ND	ND	ND	ND
Concentration, mg/dscm				ND
Concentration, ppbvd				ND
Emission Rate, lb/test period				ND
Emission Rate, lb/ton				ND
trans-1,2-Dichloroethene				
Molecular Weight, g/g-mole	96.95	96.95	96.95	96.95
Target Catch, µg	ND	ND	ND	ND
Concentration, mg/dscm				ND
Concentration, ppbvd				ND
Emission Rate, lb/test period				ND
Emission Rate, lb/ton				ND

Summary of Stack Gas Parameters and Test Results
Volatile Organics - SW-846 Method 0030
Normal Operations, Tunnel Exhaust Duct
Asphalt Plant C - California

Run Number	T-V-1-1	T-V-1-2	T-V-1-3	TOTAL
1,2-Dichloropropane				
Molecular Weight, g/g-mole	112.99	112.99	112.99	112.99
Target Catch, µg	ND	ND	ND	ND
Concentration, mg/dscm				ND
Concentration, ppbvd				ND
Emission Rate, lb/test period				ND
Emission Rate, lb/ton				ND
cis-1,3-Dichloropropene				
Molecular Weight, g/g-mole	110.98	110.98	110.98	110.98
Target Catch, µg	ND	ND	ND	ND
Concentration, mg/dscm				ND
Concentration, ppbvd				ND
Emission Rate, lb/test period				ND
Emission Rate, lb/ton				ND
trans-1,3-Dichloropropene				
Molecular Weight, g/g-mole	110.98	110.98	110.98	110.98
Target Catch, µg	ND	ND	ND	ND
Concentration, mg/dscm				ND
Concentration, ppbvd				ND
Emission Rate, lb/test period				ND
Emission Rate, lb/ton				ND
1,2-Epoxybutane				
Molecular Weight, g/g-mole	72.12	72.12	72.12	72.12
Target Catch, µg	ND	ND	ND	ND
Concentration, mg/dscm				ND
Concentration, ppbvd				ND
Emission Rate, lb/test period				ND
Emission Rate, lb/ton				ND
Ethyl acrylate				
Molecular Weight, g/g-mole	100.11	100.11	100.11	100.11
Target Catch, µg	ND	ND	ND	ND
Concentration, mg/dscm				ND
Concentration, ppbvd				ND
Emission Rate, lb/test period				ND
Emission Rate, lb/ton				ND

Summary of Stack Gas Parameters and Test Results
Volatile Organics - SW-846 Method 0030
Normal Operations, Tunnel Exhaust Duct
Asphalt Plant C - California

Run Number	T-V-1-1	T-V-1-2	T-V-1-3	TOTAL
Ethylbenzene				
Molecular Weight, g/g-mole	106.16	106.16	106.16	106.16
Target Catch, µg	0.137	0.128	0.105	0.370
Concentration, mg/dscm				6.98E-03
Concentration, ppbvd				1.58
Emission Rate, lb/test period				4.04E-04
Emission Rate, lb/ton				5.69E-07
n-Hexane				
Molecular Weight, g/g-mole	86.17	86.17	86.17	86.17
Target Catch, µg	{0.128}	{0.148}	{0.112}	{0.388}
Concentration, mg/dscm				{7.32E-03}
Concentration, ppbvd				{2.04}
Emission Rate, lb/test period				{4.23E-04}
Emission Rate, lb/ton				{5.97E-07}
2-Hexanone				
Molecular Weight, g/g-mole	100.16	100.16	100.16	100.16
Target Catch, µg	ND	ND	ND	ND
Concentration, mg/dscm				ND
Concentration, ppbvd				ND
Emission Rate, lb/test period				ND
Emission Rate, lb/ton				ND
Iodomethane				
Molecular Weight, g/g-mole	141.95	141.95	141.95	141.95
Target Catch, µg	ND	ND	ND	ND
Concentration, mg/dscm				ND
Concentration, ppbvd				ND
Emission Rate, lb/test period				ND
Emission Rate, lb/ton				ND
Isooctane				
Molecular Weight, g/g-mole	114.22	114.22	114.22	114.22
Target Catch, µg	ND	ND	ND	ND
Concentration, mg/dscm				ND
Concentration, ppbvd				ND
Emission Rate, lb/test period				ND
Emission Rate, lb/ton				ND

Summary of Stack Gas Parameters and Test Results
Volatile Organics - SW-846 Method 0030
Normal Operations, Tunnel Exhaust Duct
Asphalt Plant C - California

Run Number	T-V-1-1	T-V-1-2	T-V-1-3	TOTAL
Methyl methacrylate				
Molecular Weight, g/g-mole	86.09	86.09	86.09	86.09
Target Catch, µg	ND	ND	ND	ND
Concentration, mg/dscm				ND
Concentration, ppbvd				ND
Emission Rate, lb/test period				ND
Emission Rate, lb/ton				ND
Methylene chloride				
Molecular Weight, g/g-mole	84.94	84.94	84.94	84.94
Target Catch, µg	0.456	0.326	{0.084}	{0.866}
Concentration, mg/dscm				{1.63E-02}
Concentration, ppbvd				{4.63E+00}
Emission Rate, lb/test period				{9.45E-04}
Emission Rate, lb/ton				{1.33E-06}
4-Methyl-2-pentanone				
Molecular Weight, g/g-mole	100.16	100.16	100.16	100.16
Target Catch, µg	ND	ND	ND	ND
Concentration, mg/dscm				ND
Concentration, ppbvd				ND
Emission Rate, lb/test period				ND
Emission Rate, lb/ton				ND
MTBE				
Molecular Weight, g/g-mole	88.15	88.15	88.15	88.15
Target Catch, µg	ND	ND	{0.019}	(0.019)
Concentration, mg/dscm				(3.59E-04)
Concentration, ppbvd				(9.79E-02)
Emission Rate, lb/test period				(2.07E-05)
Emission Rate, lb/ton				(2.92E-08)
Styrene				
Molecular Weight, g/g-mole	104.14	104.14	104.14	104.14
Target Catch, µg	ND	ND	ND	ND
Concentration, mg/dscm				ND
Concentration, ppbvd				ND
Emission Rate, lb/test period				ND
Emission Rate, lb/ton				ND

Summary of Stack Gas Parameters and Test Results
Volatile Organics - SW-846 Method 0030
Normal Operations, Tunnel Exhaust Duct
Asphalt Plant C - California

Run Number	T-V-1-1	T-V-1-2	T-V-1-3	TOTAL
1,1,2,2-Tetrachloroethane				
Molecular Weight, g/g-mole	167.86	167.86	167.86	167.86
Target Catch, µg	ND	ND	ND	ND
Concentration, mg/dscm				ND
Concentration, ppbvd				ND
Emission Rate, lb/test period				ND
Emission Rate, lb/ton				ND
Tetrachloroethene				
Molecular Weight, g/g-mole	165.85	165.85	165.85	165.85
Target Catch, µg	ND	0.054	{0.038}	(0.092)
Concentration, mg/dscm				(1.74E-03)
Concentration, ppbvd				(0.252)
Emission Rate, lb/test period				(1.00E-04)
Emission Rate, lb/ton				(1.42E-07)
Toluene				
Molecular Weight, g/g-mole	92.13	92.13	92.13	92.13
Target Catch, µg	{0.380}	0.436	{0.460}	{1.276}
Concentration, mg/dscm				{2.41E-02}
Concentration, ppbvd				{6.29}
Emission Rate, lb/test period				{1.39E-03}
Emission Rate, lb/ton				{1.96E-06}
1,1,1-Trichloroethane				
Molecular Weight, g/g-mole	133.42	133.42	133.42	133.42
Target Catch, µg	ND	ND	ND	ND
Concentration, mg/dscm				ND
Concentration, ppbvd				ND
Emission Rate, lb/test period				ND
Emission Rate, lb/ton				ND
1,1,2-Trichloroethane				
Molecular Weight, g/g-mole	133.42	133.42	133.42	133.42
Target Catch, µg	ND	ND	ND	ND
Concentration, mg/dscm				ND
Concentration, ppbvd				ND
Emission Rate, lb/test period				ND
Emission Rate, lb/ton				ND

Summary of Stack Gas Parameters and Test Results
Volatile Organics - SW-846 Method 0030
Normal Operations, Tunnel Exhaust Duct
Asphalt Plant C - California

Run Number	T-V-1-1	T-V-1-2	T-V-1-3	TOTAL
Trichloroethene				
Molecular Weight, g/g-mole	131.40	131.40	131.40	131.40
Target Catch, µg	ND	ND	ND	ND
Concentration, mg/dscm				ND
Concentration, ppbvd				ND
Emission Rate, lb/test period				ND
Emission Rate, lb/ton				ND
Trichlorofluoromethane				
Molecular Weight, g/g-mole	137.38	137.38	137.38	137.38
Target Catch, µg	{0.008}	ND	{0.009}	(0.017)
Concentration, mg/dscm				(3.21E-04)
Concentration, ppbvd				(0.0562)
Emission Rate, lb/test period				(1.85E-05)
Emission Rate, lb/ton				(2.61E-08)
Vinyl acetate				
Molecular Weight, g/g-mole	86.09	86.09	86.09	86.09
Target Catch, µg	ND	ND	ND	ND
Concentration, mg/dscm				ND
Concentration, ppbvd				ND
Emission Rate, lb/test period				ND
Emission Rate, lb/ton				ND
Vinyl bromide				
Molecular Weight, g/g-mole	106.96	106.96	106.96	106.96
Target Catch, µg	ND	ND	ND	ND
Concentration, mg/dscm				ND
Concentration, ppbvd				ND
Emission Rate, lb/test period				ND
Emission Rate, lb/ton				ND
Vinyl chloride				
Molecular Weight, g/g-mole	62.50	62.50	62.50	62.50
Target Catch, µg	ND	ND	ND	ND
Concentration, mg/dscm				ND
Concentration, ppbvd				ND
Emission Rate, lb/test period				ND
Emission Rate, lb/ton				ND

Summary of Stack Gas Parameters and Test Results
Volatile Organics - SW-846 Method 0030
Normal Operations, Tunnel Exhaust Duct
Asphalt Plant C - California

Run Number	T-V-1-1	T-V-1-2	T-V-1-3	TOTAL
m-/p-Xylene				
Molecular Weight, g/g-mole	106.16	106.16	106.16	106.16
Target Catch, µg	0.720	{0.678}	0.758	{2.156}
Concentration, mg/dscm				{4.07E-02}
Concentration, ppbvd				{9.22}
Emission Rate, lb/test period				{2.35E-03}
Emission Rate, lb/ton				{3.32E-06}
o-Xylene				
Molecular Weight, g/g-mole	106.16	106.16	106.16	106.16
Target Catch, µg	0.251	0.235	0.181	0.667
Concentration, mg/dscm				1.26E-02
Concentration, ppbvd				2.85
Emission Rate, lb/test period				7.27E-04
Emission Rate, lb/ton				1.03E-06

ND indicates compound was not detected. A zero was used in the total and the value enclosed in parentheses (). Estimated values and totals using estimated values are enclosed in brackets {}.

Summary of Stack Gas Parameters and Test Results
Volatile Organics - SW-846 Method 0030
Normal Operations, Tunnel Exhaust Duct
Asphalt Plant C - California

	Run Number	T-V-2-1	T-V-2-2	T-V-2-3	T-V-2-4	TOTAL
	Run Date	7/25/98	7/25/98	7/25/98	7/25/98	
	Run Time	0802-0827	0859-0924	0951-1023	1102-1122	
	Net Run Time	25.3	25	32	20	102.3
P_{bar}	Barometric Pressure, inches Hg	29.33	29.33	29.33	29.33	
γ	Dry Gas Meter calibration factor	1.0392	1.0392	1.0392	1.0392	
V_m	Sample Volume, liters	19.70	21.43	24.11	18.39	
T_m	Avg. Meter temperature, °R	532	541	554	559	
ΔH	Pressure diff. of meter, in. H_2O	1.6	1.6	1.6	1.8	
$V_{m(std)}$	Sample Volume, dry std. liters	19.986	21.392	23.495	17.768	82.641
Q_s	Volumetric Flow Rate, dscfm	9,663	9,663	9,663	9,663	9,663
	Tons of asphalt per test period	177.8	182.6	162.9	62.8	586.1
Acetone						
	Molecular Weight, g/g-mole	58.08	58.08	58.08	58.08	58.08
	Target Catch, µg	0.193	0.232	0.137	0.296	0.858
	Concentration, mg/dscm					1.04E-02
	Concentration, ppbvd					4.30
	Emission Rate, lb/test period					6.41E-04
	Emission Rate, lb/ton					1.09E-06
Acrylonitrile						
	Molecular Weight, g/g-mole	53.06	53.06	53.06	53.06	53.06
	Target Catch, µg	ND	ND	ND	ND	ND
	Concentration, mg/dscm					ND
	Concentration, ppbvd					ND
	Emission Rate, lb/test period					ND
	Emission Rate, lb/ton					ND
Allyl chloride						
	Molecular Weight, g/g-mole	76.53	76.53	76.53	76.53	76.53
	Target Catch, µg	ND	ND	ND	ND	ND
	Concentration, mg/dscm					ND
	Concentration, ppbvd					ND
	Emission Rate, lb/test period					ND
	Emission Rate, lb/ton					ND

Summary of Stack Gas Parameters and Test Results
Volatile Organics - SW-846 Method 0030
Normal Operations, Tunnel Exhaust Duct
Asphalt Plant C - California

Run Number	T-V-2-1	T-V-2-2	T-V-2-3	T-V-2-4	TOTAL
Benzene					
Molecular Weight, g/g-mole	78.11	78.11	78.11	78.11	78.11
Target Catch, µg	0.263	0.238	0.156	0.108	0.765
Concentration, mg/dscm					9.26E-03
Concentration, ppbvd					2.85
Emission Rate, lb/test period					5.71E-04
Emission Rate, lb/ton					9.75E-07
Bromodichloromethane					
Molecular Weight, g/g-mole	163.82	163.82	163.82	163.82	163.82
Target Catch, µg	ND	ND	ND	ND	ND
Concentration, mg/dscm					ND
Concentration, ppbvd					ND
Emission Rate, lb/test period					ND
Emission Rate, lb/ton					ND
Bromoform					
Molecular Weight, g/g-mole	252.77	252.77	252.77	252.77	252.77
Target Catch, µg	ND	ND	ND	ND	ND
Concentration, mg/dscm					ND
Concentration, ppbvd					ND
Emission Rate, lb/test period					ND
Emission Rate, lb/ton					ND
Bromomethane					
Molecular Weight, g/g-mole	94.95	94.95	94.95	94.95	94.95
Target Catch, µg	{0.036}	{0.035}	{0.035}	ND	(0.106)
Concentration, mg/dscm					(1.28E-03)
Concentration, ppbvd					(0.325)
Emission Rate, lb/test period					(7.92E-05)
Emission Rate, lb/ton					(1.35E-07)
1,3-Butadiene					
Molecular Weight, g/g-mole	58.08	58.08	58.08	58.08	58.08
Target Catch, µg	ND	ND	ND	ND	ND
Concentration, mg/dscm					ND
Concentration, ppbvd					ND
Emission Rate, lb/test period					ND
Emission Rate, lb/ton					ND

Summary of Stack Gas Parameters and Test Results
Volatile Organics - SW-846 Method 0030
Normal Operations, Tunnel Exhaust Duct
Asphalt Plant C - California

Run Number	T-V-2-1	T-V-2-2	T-V-2-3	T-V-2-4	TOTAL
2-Butanone					
Molecular Weight, g/g-mole	72.10	72.10	72.10	72.10	72.10
Target Catch, µg	ND	0.312	0.161	0.342	(0.815)
Concentration, mg/dscm					(9.86E-03)
Concentration, ppbvd					(3.29)
Emission Rate, lb/test period					(6.09E-04)
Emission Rate, lb/ton					(1.04E-06)
Carbon disulfide					
Molecular Weight, g/g-mole	76.14	76.14	76.14	76.14	76.14
Target Catch, µg	0.104	0.093	{0.026}	{0.044}	{0.267}
Concentration, mg/dscm					{3.23E-03}
Concentration, ppbvd					{1.021}
Emission Rate, lb/test period					{1.99E-04}
Emission Rate, lb/ton					{3.40E-07}
Carbon tetrachloride					
Molecular Weight, g/g-mole	153.84	153.84	153.84	153.84	153.84
Target Catch, µg	ND	ND	ND	ND	ND
Concentration, mg/dscm					ND
Concentration, ppbvd					ND
Emission Rate, lb/test period					ND
Emission Rate, lb/ton					ND
Chlorobenzene					
Molecular Weight, g/g-mole	112.56	112.56	112.56	112.56	112.56
Target Catch, µg	ND	ND	ND	ND	ND
Concentration, mg/dscm					ND
Concentration, ppbvd					ND
Emission Rate, lb/test period					ND
Emission Rate, lb/ton					ND
Chloroethane					
Molecular Weight, g/g-mole	64.52	64.52	64.52	64.52	64.52
Target Catch, µg	ND	ND	ND	ND	ND
Concentration, mg/dscm					ND
Concentration, ppbvd					ND
Emission Rate, lb/test period					ND
Emission Rate, lb/ton					ND

Summary of Stack Gas Parameters and Test Results
Volatile Organics - SW-846 Method 0030
Normal Operations, Tunnel Exhaust Duct
Asphalt Plant C - California

Run Number	T-V-2-1	T-V-2-2	T-V-2-3	T-V-2-4	TOTAL
Chloroform					
Molecular Weight, g/g-mole	119.39	119.39	119.39	119.39	119.39
Target Catch, µg	ND	ND	ND	ND	ND
Concentration, mg/dscm					ND
Concentration, ppbvd					ND
Emission Rate, lb/test period					ND
Emission Rate, lb/ton					ND
Chloromethane					
Molecular Weight, g/g-mole	50.49	50.49	50.49	50.49	50.49
Target Catch, µg	0.056	0.092	{0.042}	{0.040}	{0.230}
Concentration, mg/dscm					{2.78E-03}
Concentration, ppbvd					{1.326}
Emission Rate, lb/test period					{1.72E-04}
Emission Rate, lb/ton					{2.93E-07}
Cumene					
Molecular Weight, g/g-mole	120.19	120.19	120.19	120.19	120.19
Target Catch, µg	ND	ND	ND	ND	ND
Concentration, mg/dscm					ND
Concentration, ppbvd					ND
Emission Rate, lb/test period					ND
Emission Rate, lb/ton					ND
Dibromochloromethane					
Molecular Weight, g/g-mole	208.27	208.27	208.27	208.27	208.27
Target Catch, µg	ND	ND	ND	ND	ND
Concentration, mg/dscm					ND
Concentration, ppbvd					ND
Emission Rate, lb/test period					ND
Emission Rate, lb/ton					ND
1,2-Dibromoethane					
Molecular Weight, g/g-mole	187.88	187.88	187.88	187.88	187.88
Target Catch, µg	ND	ND	ND	ND	ND
Concentration, mg/dscm					ND
Concentration, ppbvd					ND
Emission Rate, lb/test period					ND
Emission Rate, lb/ton					ND

Summary of Stack Gas Parameters and Test Results
Volatile Organics - SW-846 Method 0030
Normal Operations, Tunnel Exhaust Duct
Asphalt Plant C - California

Run Number	T-V-2-1	T-V-2-2	T-V-2-3	T-V-2-4	TOTAL
1,1-Dichloroethane					
Molecular Weight, g/g-mole	98.97	98.97	98.97	98.97	98.97
Target Catch, µg	ND	ND	ND	ND	ND
Concentration, mg/dscm					ND
Concentration, ppbvd					ND
Emission Rate, lb/test period					ND
Emission Rate, lb/ton					ND
1,2-Dichloroethane					
Molecular Weight, g/g-mole	98.96	98.96	98.96	98.96	98.96
Target Catch, µg	ND	ND	ND	ND	ND
Concentration, mg/dscm					ND
Concentration, ppbvd					ND
Emission Rate, lb/test period					ND
Emission Rate, lb/ton					ND
1,1-Dichloroethene					
Molecular Weight, g/g-mole	96.95	96.95	96.95	96.95	96.95
Target Catch, µg	ND	ND	ND	ND	ND
Concentration, mg/dscm					ND
Concentration, ppbvd					ND
Emission Rate, lb/test period					ND
Emission Rate, lb/ton					ND
cis-1,2-Dichloroethene					
Molecular Weight, g/g-mole	96.95	96.95	96.95	96.95	96.95
Target Catch, µg	ND	ND	ND	ND	ND
Concentration, mg/dscm					ND
Concentration, ppbvd					ND
Emission Rate, lb/test period					ND
Emission Rate, lb/ton					ND
trans-1,2-Dichloroethene					
Molecular Weight, g/g-mole	96.95	96.95	96.95	96.95	96.95
Target Catch, µg	ND	ND	ND	ND	ND
Concentration, mg/dscm					ND
Concentration, ppbvd					ND
Emission Rate, lb/test period					ND
Emission Rate, lb/ton					ND

Summary of Stack Gas Parameters and Test Results
Volatile Organics - SW-846 Method 0030
Normal Operations, Tunnel Exhaust Duct
Asphalt Plant C - California

Run Number	T-V-2-1	T-V-2-2	T-V-2-3	T-V-2-4	TOTAL
1,2-Dichloropropane					
Molecular Weight, g/g-mole	112.99	112.99	112.99	112.99	112.99
Target Catch, µg	ND	ND	ND	ND	ND
Concentration, mg/dscm					ND
Concentration, ppbvd					ND
Emission Rate, lb/test period					ND
Emission Rate, lb/ton					ND
cis-1,3-Dichloropropene					
Molecular Weight, g/g-mole	110.98	110.98	110.98	110.98	110.98
Target Catch, µg	ND	ND	ND	ND	ND
Concentration, mg/dscm					ND
Concentration, ppbvd					ND
Emission Rate, lb/test period					ND
Emission Rate, lb/ton					ND
trans-1,3-Dichloropropene					
Molecular Weight, g/g-mole	110.98	110.98	110.98	110.98	110.98
Target Catch, µg	ND	ND	ND	ND	ND
Concentration, mg/dscm					ND
Concentration, ppbvd					ND
Emission Rate, lb/test period					ND
Emission Rate, lb/ton					ND
1,2-Epoxybutane					
Molecular Weight, g/g-mole	72.12	72.12	72.12	72.12	72.12
Target Catch, µg	ND	ND	ND	ND	ND
Concentration, mg/dscm					ND
Concentration, ppbvd					ND
Emission Rate, lb/test period					ND
Emission Rate, lb/ton					ND
Ethyl acrylate					
Molecular Weight, g/g-mole	100.11	100.11	100.11	100.11	100.11
Target Catch, µg	ND	ND	ND	ND	ND
Concentration, mg/dscm					ND
Concentration, ppbvd					ND
Emission Rate, lb/test period					ND
Emission Rate, lb/ton					ND

Summary of Stack Gas Parameters and Test Results
Volatile Organics - SW-846 Method 0030
Normal Operations, Tunnel Exhaust Duct
Asphalt Plant C - California

Run Number	T-V-2-1	T-V-2-2	T-V-2-3	T-V-2-4	TOTAL
Ethylbenzene					
Molecular Weight, g/g-mole	106.16	106.16	106.16	106.16	106.16
Target Catch, µg	{0.015}	0.069	0.050	{0.027}	{0.161}
Concentration, mg/dscm					{1.95E-03}
Concentration, ppbvd					{0.441}
Emission Rate, lb/test period					{1.20E-04}
Emission Rate, lb/ton					{2.05E-07}
n-Hexane					
Molecular Weight, g/g-mole	86.17	86.17	86.17	86.17	86.17
Target Catch, µg	0.266	{0.176}	{0.145}	{0.083}	{0.670}
Concentration, mg/dscm					{8.11E-03}
Concentration, ppbvd					{2.26}
Emission Rate, lb/test period					{5.00E-04}
Emission Rate, lb/ton					{8.54E-07}
2-Hexanone					
Molecular Weight, g/g-mole	100.16	100.16	100.16	100.16	100.16
Target Catch, µg	ND	ND	ND	ND	ND
Concentration, mg/dscm					ND
Concentration, ppbvd					ND
Emission Rate, lb/test period					ND
Emission Rate, lb/ton					ND
Iodomethane					
Molecular Weight, g/g-mole	141.95	141.95	141.95	141.95	141.95
Target Catch, µg	ND	ND	ND	ND	ND
Concentration, mg/dscm					ND
Concentration, ppbvd					ND
Emission Rate, lb/test period					ND
Emission Rate, lb/ton					ND
Isooctane					
Molecular Weight, g/g-mole	114.22	114.22	114.22	114.22	114.22
Target Catch, µg	{0.029}	{0.016}	{0.019}	{0.021}	{0.085}
Concentration, mg/dscm					{1.03E-03}
Concentration, ppbvd					{0.217}
Emission Rate, lb/test period					{6.35E-05}
Emission Rate, lb/ton					{1.08E-07}

Summary of Stack Gas Parameters and Test Results
Volatile Organics - SW-846 Method 0030
Normal Operations, Tunnel Exhaust Duct
Asphalt Plant C - California

Run Number	T-V-2-1	T-V-2-2	T-V-2-3	T-V-2-4	TOTAL
Methyl methacrylate					
Molecular Weight, g/g-mole	86.09	86.09	86.09	86.09	86.09
Target Catch, µg	ND	ND	ND	ND	ND
Concentration, mg/dscm					ND
Concentration, ppbvd					ND
Emission Rate, lb/test period					ND
Emission Rate, lb/ton					ND
Methylene chloride					
Molecular Weight, g/g-mole	84.94	84.94	84.94	84.94	84.94
Target Catch, µg	0.488	ND	0.081	0.064	(0.633)
Concentration, mg/dscm					(7.66E-03)
Concentration, ppbvd					(2.17)
Emission Rate, lb/test period					{4.73E-04}
Emission Rate, lb/ton					(8.07E-07)
4-Methyl-2-pentanone					
Molecular Weight, g/g-mole	100.16	100.16	100.16	100.16	100.16
Target Catch, µg	ND	ND	ND	ND	ND
Concentration, mg/dscm					ND
Concentration, ppbvd					ND
Emission Rate, lb/test period					ND
Emission Rate, lb/ton					ND
MTBE					
Molecular Weight, g/g-mole	88.15	88.15	88.15	88.15	88.15
Target Catch, µg	{0.033}	{0.022}	{0.039}	{0.036}	{0.130}
Concentration, mg/dscm					{1.57E-03}
Concentration, ppbvd					{0.429}
Emission Rate, lb/test period					{9.71E-05}
Emission Rate, lb/ton					{1.66E-07}
Styrene					
Molecular Weight, g/g-mole	104.14	104.14	104.14	104.14	104.14
Target Catch, µg	ND	0.052	{0.038}	{0.017}	(0.107)
Concentration, mg/dscm					(1.29E-03)
Concentration, ppbvd					(0.299)
Emission Rate, lb/test period					(7.99E-05)
Emission Rate, lb/ton					(1.36E-07)

Summary of Stack Gas Parameters and Test Results
Volatile Organics - SW-846 Method 0030
Normal Operations, Tunnel Exhaust Duct
Asphalt Plant C - California

Run Number	T-V-2-1	T-V-2-2	T-V-2-3	T-V-2-4	TOTAL
1,1,2,2-Tetrachloroethane					
Molecular Weight, g/g-mole	167.86	167.86	167.86	167.86	167.86
Target Catch, µg	ND	ND	ND	ND	ND
Concentration, mg/dscm					ND
Concentration, ppbvd					ND
Emission Rate, lb/test period					ND
Emission Rate, lb/ton					ND
Tetrachloroethene					
Molecular Weight, g/g-mole	165.85	165.85	165.85	165.85	165.85
Target Catch, µg	{0.017}	{0.035}	{0.035}	{0.031}	{0.118}
Concentration, mg/dscm					{1.43E-03}
Concentration, ppbvd					{0.207}
Emission Rate, lb/test period					{8.81E-05}
Emission Rate, lb/ton					{1.50E-07}
Toluene					
Molecular Weight, g/g-mole	92.13	92.13	92.13	92.13	92.13
Target Catch, µg	0.132	0.247	0.218	0.144	0.741
Concentration, mg/dscm					8.97E-03
Concentration, ppbvd					2.34
Emission Rate, lb/test period					5.53E-04
Emission Rate, lb/ton					9.44E-07
1,1,1-Trichloroethane					
Molecular Weight, g/g-mole	133.42	133.42	133.42	133.42	133.42
Target Catch, µg	ND	ND	ND	ND	ND
Concentration, mg/dscm					ND
Concentration, ppbvd					ND
Emission Rate, lb/test period					ND
Emission Rate, lb/ton					ND
1,1,2-Trichloroethane					
Molecular Weight, g/g-mole	133.42	133.42	133.42	133.42	133.42
Target Catch, µg	ND	ND	ND	ND	ND
Concentration, mg/dscm					ND
Concentration, ppbvd					ND
Emission Rate, lb/test period					ND
Emission Rate, lb/ton					ND

Summary of Stack Gas Parameters and Test Results
Volatile Organics - SW-846 Method 0030
Normal Operations, Tunnel Exhaust Duct
Asphalt Plant C - California

Run Number	T-V-2-1	T-V-2-2	T-V-2-3	T-V-2-4	TOTAL
Trichloroethene					
Molecular Weight, g/g-mole	131.40	131.40	131.40	131.40	131.40
Target Catch, µg	ND	ND	ND	ND	ND
Concentration, mg/dscm					ND
Concentration, ppbvd					ND
Emission Rate, lb/test period					ND
Emission Rate, lb/ton					ND
Trichlorofluoromethane					
Molecular Weight, g/g-mole	137.38	137.38	137.38	137.38	137.38
Target Catch, µg	{0.014}	{0.011}	ND	{0.009}	(0.034)
Concentration, mg/dscm					(4.11E-04)
Concentration, ppbvd					(0.0720)
Emission Rate, lb/test period					(2.54E-05)
Emission Rate, lb/ton					(4.33E-08)
Vinyl acetate					
Molecular Weight, g/g-mole	86.09	86.09	86.09	86.09	86.09
Target Catch, µg	ND	ND	ND	ND	ND
Concentration, mg/dscm					ND
Concentration, ppbvd					ND
Emission Rate, lb/test period					ND
Emission Rate, lb/ton					ND
Vinyl bromide					
Molecular Weight, g/g-mole	106.96	106.96	106.96	106.96	106.96
Target Catch, µg	ND	ND	ND	ND	ND
Concentration, mg/dscm					ND
Concentration, ppbvd					ND
Emission Rate, lb/test period					ND
Emission Rate, lb/ton					ND
Vinyl chloride					
Molecular Weight, g/g-mole	62.50	62.50	62.50	62.50	62.50
Target Catch, µg	ND	ND	ND	ND	ND
Concentration, mg/dscm					ND
Concentration, ppbvd					ND
Emission Rate, lb/test period					ND
Emission Rate, lb/ton					ND

Summary of Stack Gas Parameters and Test Results
Volatile Organics - SW-846 Method 0030
Normal Operations, Tunnel Exhaust Duct
Asphalt Plant C - California

Run Number	T-V-2-1	T-V-2-2	T-V-2-3	T-V-2-4	TOTAL
m-/p-Xylene					
Molecular Weight, g/g-mole	106.16	106.16	106.16	106.16	106.16
Target Catch, µg	{0.078}	0.428	0.255	0.149	{0.910}
Concentration, mg/dscm					{1.10E-02}
Concentration, ppbvd					{2.50}
Emission Rate, lb/test period					{6.80E-04}
Emission Rate, lb/ton					{1.16E-06}
o-Xylene					
Molecular Weight, g/g-mole	106.16	106.16	106.16	106.16	106.16
Target Catch, µg	{0.012}	0.119	0.088	{0.042}	{0.261}
Concentration, mg/dscm					{3.16E-03}
Concentration, ppbvd					{0.716}
Emission Rate, lb/test period					{1.95E-04}
Emission Rate, lb/ton					{3.33E-07}

ND indicates compound was not detected. A zero was used in the total and the value enclosed in parentheses ().
Estimated values and totals using estimated values are enclosed in brackets {}.

Summary of Stack Gas Parameters and Test Results
Volatile Organics - SW-846 Method 0030
Normal Operations, Tunnel Exhaust Duct
Asphalt Plant C - California

	Run Number	T-V-3-1	T-V-3-2	T-V-3-3	Total
	Run Date	7/27/98	7/27/98	7/27/98	
	Run Time	0917-0947	1009-1034	1053-1123	
	Net Run Time	30.0	25.0	30.0	85.0
P_{bar}	Barometric Pressure, inches Hg	29.23	29.23	29.23	
γ	Dry Gas Meter calibration factor	1.0392	1.0392	1.0392	
V_m	Sample Volume, liters	22.380	20.480	20.410	
T_m	Avg. Meter temperature, °R	550	560	569	
ΔH	Pressure diff. of meter, in. H_2O	1.6	1.7	1.6	
$V_{m(std)}$	Sample Volume, dry std. liters	21.888	19.692	19.305	60.885
Q_s	Volumetric Flow Rate, dscfm	9,972	9,972	9,972	9,972
	Tons of asphalt per test period	258.4	292.2	273.9	824.5
Acetone					
	Molecular Weight, g/g-mole	58.08	58.08	58.08	58.08
	Target Catch, µg	0.183	ND	ND	(0.183)
	Concentration, mg/dscm				(3.01E-03)
	Concentration, ppbvd				(1.24)
	Emission Rate, lb/test period				(1.59E-04)
	Emission Rate, lb/ton				(1.93E-07)
Acrylonitrile					
	Molecular Weight, g/g-mole	53.06	53.06	53.06	53.06
	Target Catch, µg	ND	ND	ND	ND
	Concentration, mg/dscm				ND
	Concentration, ppbvd				ND
	Emission Rate, lb/test period				ND
	Emission Rate, lb/ton				ND
Allyl chloride					
	Molecular Weight, g/g-mole	76.53	76.53	76.53	76.53
	Target Catch, µg	ND	ND	ND	ND
	Concentration, mg/dscm				ND
	Concentration, ppbvd				ND
	Emission Rate, lb/test period				ND
	Emission Rate, lb/ton				ND

Summary of Stack Gas Parameters and Test Results
Volatile Organics - SW-846 Method 0030
Normal Operations, Tunnel Exhaust Duct
Asphalt Plant C - California

Run Number	T-V-3-1	T-V-3-2	T-V-3-3	Total
Benzene				
Molecular Weight, g/g-mole	78.11	78.11	78.11	78.11
Target Catch, µg	0.096	0.131	0.129	0.356
Concentration, mg/dscm				5.85E-03
Concentration, ppbvd				1.80
Emission Rate, lb/test period				3.09E-04
Emission Rate, lb/ton				3.75E-07
Bromodichloromethane				
Molecular Weight, g/g-mole	163.82	163.82	163.82	163.82
Target Catch, µg	ND	ND	ND	ND
Concentration, mg/dscm				ND
Concentration, ppbvd				ND
Emission Rate, lb/test period				ND
Emission Rate, lb/ton				ND
Bromoform				
Molecular Weight, g/g-mole	252.77	252.77	252.77	252.77
Target Catch, µg	ND	ND	ND	ND
Concentration, mg/dscm				ND
Concentration, ppbvd				ND
Emission Rate, lb/test period				ND
Emission Rate, lb/ton				ND
Bromomethane				
Molecular Weight, g/g-mole	94.95	94.95	94.95	94.95
Target Catch, µg	{0.005}	ND	ND	(0.005)
Concentration, mg/dscm				(8.21E-05)
Concentration, ppbvd				(0.0208)
Emission Rate, lb/test period				(4.35E-06)
Emission Rate, lb/ton				(5.27E-09)
1,3-Butadiene				
Molecular Weight, g/g-mole	58.08	58.08	58.08	58.08
Target Catch, µg	ND	ND	ND	ND
Concentration, mg/dscm				ND
Concentration, ppbvd				ND
Emission Rate, lb/test period				ND
Emission Rate, lb/ton				ND

Summary of Stack Gas Parameters and Test Results
Volatile Organics - SW-846 Method 0030
Normal Operations, Tunnel Exhaust Duct
Asphalt Plant C - California

Run Number	T-V-3-1	T-V-3-2	T-V-3-3	Total
2-Butanone				
Molecular Weight, g/g-mole	72.10	72.10	72.10	72.10
Target Catch, µg	0.166	ND	ND	(0.166)
Concentration, mg/dscm				(2.73E-03)
Concentration, ppbvd				(0.910)
Emission Rate, lb/test period				(1.44E-04)
Emission Rate, lb/ton				(1.75E-07)
Carbon disulfide				
Molecular Weight, g/g-mole	76.14	76.14	76.14	76.14
Target Catch, µg	{0.015}	{0.017}	{0.020}	{0.052}
Concentration, mg/dscm				{8.54E-04}
Concentration, ppbvd				{0.270}
Emission Rate, lb/test period				{4.52E-05}
Emission Rate, lb/ton				{5.48E-08}
Carbon tetrachloride				
Molecular Weight, g/g-mole	153.84	153.84	153.84	153.84
Target Catch, µg	ND	ND	ND	ND
Concentration, mg/dscm				ND
Concentration, ppbvd				ND
Emission Rate, lb/test period				ND
Emission Rate, lb/ton				ND
Chlorobenzene				
Molecular Weight, g/g-mole	112.56	112.56	112.56	112.56
Target Catch, µg	ND	ND	ND	ND
Concentration, mg/dscm				ND
Concentration, ppbvd				ND
Emission Rate, lb/test period				ND
Emission Rate, lb/ton				ND
Chloroethane				
Molecular Weight, g/g-mole	64.52	64.52	64.52	64.52
Target Catch, µg	ND	ND	ND	ND
Concentration, mg/dscm				ND
Concentration, ppbvd				ND
Emission Rate, lb/test period				ND
Emission Rate, lb/ton				ND

Summary of Stack Gas Parameters and Test Results
Volatile Organics - SW-846 Method 0030
Normal Operations, Tunnel Exhaust Duct
Asphalt Plant C - California

Run Number	T-V-3-1	T-V-3-2	T-V-3-3	Total
Chloroform				
Molecular Weight, g/g-mole	119.39	119.39	119.39	119.39
Target Catch, µg	ND	ND	ND	ND
Concentration, mg/dscm				ND
Concentration, ppbvd				ND
Emission Rate, lb/test period				ND
Emission Rate, lb/ton				ND
Chloromethane				
Molecular Weight, g/g-mole	50.49	50.49	50.49	50.49
Target Catch, µg	{0.030}	ND	{0.043}	(0.073)
Concentration, mg/dscm				(1.20E-03)
Concentration, ppbvd				(0.571)
Emission Rate, lb/test period				(6.35E-05)
Emission Rate, lb/ton				(7.70E-08)
Cumene				
Molecular Weight, g/g-mole	120.19	120.19	120.19	120.19
Target Catch, µg	ND	ND	ND	ND
Concentration, mg/dscm				ND
Concentration, ppbvd				ND
Emission Rate, lb/test period				ND
Emission Rate, lb/ton				ND
Dibromochloromethane				
Molecular Weight, g/g-mole	208.27	208.27	208.27	208.27
Target Catch, µg	ND	ND	ND	ND
Concentration, mg/dscm				ND
Concentration, ppbvd				ND
Emission Rate, lb/test period				ND
Emission Rate, lb/ton				ND
1,2-Dibromoethane				
Molecular Weight, g/g-mole	187.88	187.88	187.88	187.88
Target Catch, µg	ND	ND	ND	ND
Concentration, mg/dscm				ND
Concentration, ppbvd				ND
Emission Rate, lb/test period				ND
Emission Rate, lb/ton				ND

Summary of Stack Gas Parameters and Test Results
Volatile Organics - SW-846 Method 0030
Normal Operations, Tunnel Exhaust Duct
Asphalt Plant C - California

Run Number	T-V-3-1	T-V-3-2	T-V-3-3	Total
1,1-Dichloroethane				
Molecular Weight, g/g-mole	98.97	98.97	98.97	98.97
Target Catch, µg	ND	ND	ND	ND
Concentration, mg/dscm				ND
Concentration, ppbvd				ND
Emission Rate, lb/test period				ND
Emission Rate, lb/ton				ND
1,2-Dichloroethane				
Molecular Weight, g/g-mole	98.96	98.96	98.96	98.96
Target Catch, µg	ND	ND	ND	ND
Concentration, mg/dscm				ND
Concentration, ppbvd				ND
Emission Rate, lb/test period				ND
Emission Rate, lb/ton				ND
1,1-Dichloroethene				
Molecular Weight, g/g-mole	96.95	96.95	96.95	96.95
Target Catch, µg	ND	ND	ND	ND
Concentration, mg/dscm				ND
Concentration, ppbvd				ND
Emission Rate, lb/test period				ND
Emission Rate, lb/ton				ND
cis-1,2-Dichloroethene				
Molecular Weight, g/g-mole	96.95	96.95	96.95	96.95
Target Catch, µg	ND	ND	ND	ND
Concentration, mg/dscm				ND
Concentration, ppbvd				ND
Emission Rate, lb/test period				ND
Emission Rate, lb/ton				ND
trans-1,2-Dichloroethene				
Molecular Weight, g/g-mole	96.95	96.95	96.95	96.95
Target Catch, µg	ND	ND	ND	ND
Concentration, mg/dscm				ND
Concentration, ppbvd				ND
Emission Rate, lb/test period				ND
Emission Rate, lb/ton				ND

Summary of Stack Gas Parameters and Test Results
Volatile Organics - SW-846 Method 0030
Normal Operations, Tunnel Exhaust Duct
Asphalt Plant C - California

Run Number	T-V-3-1	T-V-3-2	T-V-3-3	Total
1,2-Dichloropropane				
Molecular Weight, g/g-mole	112.99	112.99	112.99	112.99
Target Catch, µg	ND	ND	ND	ND
Concentration, mg/dscm				ND
Concentration, ppbvd				ND
Emission Rate, lb/test period				ND
Emission Rate, lb/ton				ND
cis-1,3-Dichloropropene				
Molecular Weight, g/g-mole	110.98	110.98	110.98	110.98
Target Catch, µg	ND	ND	ND	ND
Concentration, mg/dscm				ND
Concentration, ppbvd				ND
Emission Rate, lb/test period				ND
Emission Rate, lb/ton				ND
trans-1,3-Dichloropropene				
Molecular Weight, g/g-mole	110.98	110.98	110.98	110.98
Target Catch, µg	ND	ND	ND	ND
Concentration, mg/dscm				ND
Concentration, ppbvd				ND
Emission Rate, lb/test period				ND
Emission Rate, lb/ton				ND
1,2-Epoxybutane				
Molecular Weight, g/g-mole	72.12	72.12	72.12	72.12
Target Catch, µg	ND	ND	ND	ND
Concentration, mg/dscm				ND
Concentration, ppbvd				ND
Emission Rate, lb/test period				ND
Emission Rate, lb/ton				ND
Ethyl acrylate				
Molecular Weight, g/g-mole	100.11	100.11	100.11	100.11
Target Catch, µg	ND	ND	ND	ND
Concentration, mg/dscm				ND
Concentration, ppbvd				ND
Emission Rate, lb/test period				ND
Emission Rate, lb/ton				ND

Summary of Stack Gas Parameters and Test Results
Volatile Organics - SW-846 Method 0030
Normal Operations, Tunnel Exhaust Duct
Asphalt Plant C - California

Run Number	T-V-3-1	T-V-3-2	T-V-3-3	Total
Ethylbenzene				
Molecular Weight, g/g-mole	106.16	106.16	106.16	106.16
Target Catch, µg	0.075	0.065	0.071	0.211
Concentration, mg/dscm				3.47E-03
Concentration, ppbvd				0.785
Emission Rate, lb/test period				1.83E-04
Emission Rate, lb/ton				2.22E-07
n-Hexane				
Molecular Weight, g/g-mole	86.17	86.17	86.17	86.17
Target Catch, µg	{0.107}	{0.135}	{0.142}	{0.384}
Concentration, mg/dscm				{6.31E-03}
Concentration, ppbvd				{1.76}
Emission Rate, lb/test period				{3.34E-04}
Emission Rate, lb/ton				{4.05E-07}
2-Hexanone				
Molecular Weight, g/g-mole	100.16	100.16	100.16	100.16
Target Catch, µg	ND	ND	ND	ND
Concentration, mg/dscm				ND
Concentration, ppbvd				ND
Emission Rate, lb/test period				ND
Emission Rate, lb/ton				ND
Iodomethane				
Molecular Weight, g/g-mole	141.95	141.95	141.95	141.95
Target Catch, µg	ND	ND	ND	ND
Concentration, mg/dscm				ND
Concentration, ppbvd				ND
Emission Rate, lb/test period				ND
Emission Rate, lb/ton				ND
Isooctane				
Molecular Weight, g/g-mole	114.22	114.22	114.22	114.22
Target Catch, µg	{0.012}	ND	ND	(0.012)
Concentration, mg/dscm				(1.97E-04)
Concentration, ppbvd				(0.0415)
Emission Rate, lb/test period				(1.04E-05)
Emission Rate, lb/ton				(1.27E-08)

86

Summary of Stack Gas Parameters and Test Results
Volatile Organics - SW-846 Method 0030
Normal Operations, Tunnel Exhaust Duct
Asphalt Plant C - California

Run Number	T-V-3-1	T-V-3-2	T-V-3-3	Total
Methyl methacrylate				
Molecular Weight, g/g-mole	86.09	86.09	86.09	86.09
Target Catch, µg	ND	ND	ND	ND
Concentration, mg/dscm				ND
Concentration, ppbvd				ND
Emission Rate, lb/test period				ND
Emission Rate, lb/ton				ND
Methylene chloride				
Molecular Weight, g/g-mole	84.94	84.94	84.94	84.94
Target Catch, µg	0.508	0.828	{0.049}	{1.385}
Concentration, mg/dscm				{2.27E-02}
Concentration, ppbvd				{6.44}
Emission Rate, lb/test period				{1.20E-03}
Emission Rate, lb/ton				{1.46E-06}
4-Methyl-2-pentanone				
Molecular Weight, g/g-mole	100.16	100.16	100.16	100.16
Target Catch, µg	ND	ND	ND	ND
Concentration, mg/dscm				ND
Concentration, ppbvd				ND
Emission Rate, lb/test period				ND
Emission Rate, lb/ton				ND
MTBE				
Molecular Weight, g/g-mole	88.15	88.15	88.15	88.15
Target Catch, µg	{0.028}	{0.022}	{0.015}	{0.065}
Concentration, mg/dscm				{1.07E-03}
Concentration, ppbvd				{0.291}
Emission Rate, lb/test period				{5.65E-05}
Emission Rate, lb/ton				{6.85E-08}
Styrene				
Molecular Weight, g/g-mole	104.14	104.14	104.14	104.14
Target Catch, µg	{0.029}	{0.036}	{0.037}	{0.102}
Concentration, mg/dscm				{1.68E-03}
Concentration, ppbvd				{0.387}
Emission Rate, lb/test period				{8.87E-05}
Emission Rate, lb/ton				{1.08E-07}

Summary of Stack Gas Parameters and Test Results
Volatile Organics - SW-846 Method 0030
Normal Operations, Tunnel Exhaust Duct
Asphalt Plant C - California

Run Number	T-V-3-1	T-V-3-2	T-V-3-3	Total
1,1,2,2-Tetrachloroethane				
Molecular Weight, g/g-mole	167.86	167.86	167.86	167.86
Target Catch, µg	ND	ND	ND	ND
Concentration, mg/dscm				ND
Concentration, ppbvd				ND
Emission Rate, lb/test period				ND
Emission Rate, lb/ton				ND
Tetrachloroethene				
Molecular Weight, g/g-mole	165.85	165.85	165.85	165.85
Target Catch, µg	{0.023}	{0.015}	{0.028}	{0.066}
Concentration, mg/dscm				{1.08E-03}
Concentration, ppbvd				{0.157}
Emission Rate, lb/test period				{5.74E-05}
Emission Rate, lb/ton				{6.96E-08}
Toluene				
Molecular Weight, g/g-mole	92.13	92.13	92.13	92.13
Target Catch, µg	0.212	0.200	0.217	0.629
Concentration, mg/dscm				1.03E-02
Concentration, ppbvd				2.70
Emission Rate, lb/test period				5.47E-04
Emission Rate, lb/ton				6.63E-07
1,1,1-Trichloroethane				
Molecular Weight, g/g-mole	133.42	133.42	133.42	133.42
Target Catch, µg	ND	ND	ND	ND
Concentration, mg/dscm				ND
Concentration, ppbvd				ND
Emission Rate, lb/test period				ND
Emission Rate, lb/ton				ND
1,1,2-Trichloroethane				
Molecular Weight, g/g-mole	133.42	133.42	133.42	133.42
Target Catch, µg	ND	ND	ND	ND
Concentration, mg/dscm				ND
Concentration, ppbvd				ND
Emission Rate, lb/test period				ND
Emission Rate, lb/ton				ND

Summary of Stack Gas Parameters and Test Results
Volatile Organics - SW-846 Method 0030
Normal Operations, Tunnel Exhaust Duct
Asphalt Plant C - California

Run Number	T-V-3-1	T-V-3-2	T-V-3-3	Total
Trichloroethene				
Molecular Weight, g/g-mole	131.40	131.40	131.40	131.40
Target Catch, µg	ND	ND	ND	ND
Concentration, mg/dscm				ND
Concentration, ppbvd				ND
Emission Rate, lb/test period				ND
Emission Rate, lb/ton				ND
Trichlorofluoromethane				
Molecular Weight, g/g-mole	137.38	137.38	137.38	137.38
Target Catch, µg	{0.011}	{0.011}	{0.006}	{0.028}
Concentration, mg/dscm				{4.60E-04}
Concentration, ppbvd				{0.0805}
Emission Rate, lb/test period				{2.43E-05}
Emission Rate, lb/ton				{2.95E-08}
Vinyl acetate				
Molecular Weight, g/g-mole	86.09	86.09	86.09	86.09
Target Catch, µg	ND	ND	ND	ND
Concentration, mg/dscm				ND
Concentration, ppbvd				ND
Emission Rate, lb/test period				ND
Emission Rate, lb/ton				ND
Vinyl bromide				
Molecular Weight, g/g-mole	106.96	106.96	106.96	106.96
Target Catch, µg	ND	ND	ND	ND
Concentration, mg/dscm				ND
Concentration, ppbvd				ND
Emission Rate, lb/test period				ND
Emission Rate, lb/ton				ND
Vinyl chloride				
Molecular Weight, g/g-mole	62.50	62.50	62.50	62.50
Target Catch, µg	ND	ND	ND	ND
Concentration, mg/dscm				ND
Concentration, ppbvd				ND
Emission Rate, lb/test period				ND
Emission Rate, lb/ton				ND

Summary of Stack Gas Parameters and Test Results
Volatile Organics - SW-846 Method 0030
Normal Operations, Tunnel Exhaust Duct
Asphalt Plant C - California

Run Number	T-V-3-1	T-V-3-2	T-V-3-3	Total
m-/p-Xylene				
Molecular Weight, g/g-mole	106.16	106.16	106.16	106.16
Target Catch, µg	0.335	0.314	0.378	1.027
Concentration, mg/dscm				1.69E-02
Concentration, ppbvd				3.82
Emission Rate, lb/test period				8.93E-04
Emission Rate, lb/ton				1.08E-06
o-Xylene				
Molecular Weight, g/g-mole	106.16	106.16	106.16	106.16
Target Catch, µg	0.131	0.118	0.124	0.373
Concentration, mg/dscm				6.13E-03
Concentration, ppbvd				1.39
Emission Rate, lb/test period				3.24E-04
Emission Rate, lb/ton				3.93E-07

ND indicates compound was not detected. A zero was used in the total and the value enclosed in parentheses (). Estimated values and totals using estimated values are enclosed in brackets {}.

Summary of Stack Gas Parameters and Test Results
Volatile Organics - SW-846 Method 0030
Background Condition, Tunnel Exhaust Duct
Asphalt Plant C - California

	Run Number	T-V-4-1	T-V-4-2	T-V-4-4 *	TOTAL
	Run Date	7/26/98	7/26/98	7/26/98	
	Run Time	0925-0950	1025-1050	1255-1320	
	Net Run Time	25.0	25.0	25.0	75.0
P_{bar}	Barometric Pressure, inches Hg	29.31	29.31	29.31	
γ	Dry Gas Meter calibration factor	1.0392	1.0392	1.0392	
V_m	Sample Volume, liters	21.600	20.690	23.030	
T_m	Avg. Meter temperature, °R	544	552	564	
ΔH	Pressure diff. of meter, in. H_2O	1.7	1.6	1.8	
$V_{m(std)}$	Sample Volume, dry std. liters	21.445	20.239	22.035	63.719
Q_s	Volumetric Flow Rate, dscfm	10,784	10,784	10,784	10,784
Acetone					
	Molecular Weight, g/g-mole	58.08	58.08	58.08	58.08
	Target Catch, µg	0.238	{0.069}	ND	(0.307)
	Concentration, mg/dscm				(4.82E-03)
	Concentration, ppbvd				(2.00)
	Emission Rate, lb/test period				(2.43E-04)
Acrylonitrile					
	Molecular Weight, g/g-mole	53.06	53.06	53.06	53.06
	Target Catch, µg	ND	ND	ND	ND
	Concentration, mg/dscm				ND
	Concentration, ppbvd				ND
	Emission Rate, lb/test period				ND
Allyl chloride					
	Molecular Weight, g/g-mole	76.53	76.53	76.53	76.53
	Target Catch, µg	ND	ND	ND	ND
	Concentration, mg/dscm				ND
	Concentration, ppbvd				ND
	Emission Rate, lb/test period				ND
Benzene					
	Molecular Weight, g/g-mole	78.11	78.11	78.11	78.11
	Target Catch, µg	{0.101}	{0.049}	0.071	{0.221}
	Concentration, mg/dscm				{3.47E-03}
	Concentration, ppbvd				{1.07}
	Emission Rate, lb/test period				{1.75E-04}

* Note: Set T-V-4-4 includes analytical results for the tenax tube only; the tenax/charcoal tube was broken and could not be analyzed.

Summary of Stack Gas Parameters and Test Results
Volatile Organics - SW-846 Method 0030
Background Condition, Tunnel Exhaust Duct
Asphalt Plant C - California

Run Number	T-V-4-1	T-V-4-2	T-V-4-4 *	TOTAL
Bromodichloromethane				
Molecular Weight, g/g-mole	163.82	163.82	163.82	163.82
Target Catch, µg	ND	ND	ND	ND
Concentration, mg/dscm				ND
Concentration, ppbvd				ND
Emission Rate, lb/test period				ND
Bromoform				
Molecular Weight, g/g-mole	252.77	252.77	252.77	252.77
Target Catch, µg	ND	ND	ND	ND
Concentration, mg/dscm				ND
Concentration, ppbvd				ND
Emission Rate, lb/test period				ND
Bromomethane				
Molecular Weight, g/g-mole	94.95	94.95	94.95	94.95
Target Catch, µg	{0.013}	{0.010}	ND	(0.023)
Concentration, mg/dscm				(3.61E-04)
Concentration, ppbvd				(0.0915)
Emission Rate, lb/test period				(1.82E-05)
1,3-Butadiene				
Molecular Weight, g/g-mole	58.08	58.08	58.08	58.08
Target Catch, µg	ND	ND	ND	ND
Concentration, mg/dscm				ND
Concentration, ppbvd				ND
Emission Rate, lb/test period				ND
2-Butanone				
Molecular Weight, g/g-mole	72.10	72.10	72.10	72.10
Target Catch, µg	0.051	ND	ND	(0.051)
Concentration, mg/dscm				(8.00E-04)
Concentration, ppbvd				(0.267)
Emission Rate, lb/test period				(4.04E-05)
Carbon disulfide				
Molecular Weight, g/g-mole	76.14	76.14	76.14	76.14
Target Catch, µg	ND	ND	ND	ND
Concentration, mg/dscm				ND
Concentration, ppbvd				ND
Emission Rate, lb/test period				ND

92

* Note: Set T-V-4-4 includes analytical results for the tenax tube only; the tenax/charcoal tube was broken and could not be analyzed.

Summary of Stack Gas Parameters and Test Results
Volatile Organics - SW-846 Method 0030
Background Condition, Tunnel Exhaust Duct
Asphalt Plant C - California

Run Number	T-V-4-1	T-V-4-2	T-V-4-4 *	TOTAL
Carbon tetrachloride				
Molecular Weight, g/g-mole	153.84	153.84	153.84	153.84
Target Catch, µg	ND	ND	ND	ND
Concentration, mg/dscm				ND
Concentration, ppbvd				ND
Emission Rate, lb/test period				ND
Chlorobenzene				
Molecular Weight, g/g-mole	112.56	112.56	112.56	112.56
Target Catch, µg	ND	ND	ND	ND
Concentration, mg/dscm				ND
Concentration, ppbvd				ND
Emission Rate, lb/test period				ND
Chloroethane				
Molecular Weight, g/g-mole	64.52	64.52	64.52	64.52
Target Catch, µg	ND	ND	ND	ND
Concentration, mg/dscm				ND
Concentration, ppbvd				ND
Emission Rate, lb/test period				ND
Chloroform				
Molecular Weight, g/g-mole	119.39	119.39	119.39	119.39
Target Catch, µg	{0.006}	ND	ND	(0.006)
Concentration, mg/dscm				(9.42E-05)
Concentration, ppbvd				(0.0190)
Emission Rate, lb/test period				(4.76E-06)
Chloromethane				
Molecular Weight, g/g-mole	50.49	50.49	50.49	50.49
Target Catch, µg	{0.030}	{0.020}	ND	(0.050)
Concentration, mg/dscm				(7.85E-04)
Concentration, ppbvd				(0.374)
Emission Rate, lb/test period				(3.96E-05)
Cumene				
Molecular Weight, g/g-mole	120.19	120.19	120.19	120.19
Target Catch, µg	ND	ND	ND	ND
Concentration, mg/dscm				ND
Concentration, ppbvd				ND
Emission Rate, lb/test period				ND

93

* Note: Set T-V-4-4 includes analytical results for the tenax tube only; the tenax/charcoal tube was broken and could not be analyzed.

Summary of Stack Gas Parameters and Test Results
Volatile Organics - SW-846 Method 0030
Background Condition, Tunnel Exhaust Duct
Asphalt Plant C - California

Run Number	T-V-4-1	T-V-4-2	T-V-4-4 *	TOTAL
Dibromochloromethane				
Molecular Weight, g/g-mole	208.27	208.27	208.27	208.27
Target Catch, µg	ND	ND	ND	ND
Concentration, mg/dscm				ND
Concentration, ppbvd				ND
Emission Rate, lb/test period				ND
1,2-Dibromoethane				
Molecular Weight, g/g-mole	187.88	187.88	187.88	187.88
Target Catch, µg	ND	ND	ND	ND
Concentration, mg/dscm				ND
Concentration, ppbvd				ND
Emission Rate, lb/test period				ND
1,1-Dichloroethane				
Molecular Weight, g/g-mole	98.97	98.97	98.97	98.97
Target Catch, µg	ND	ND	ND	ND
Concentration, mg/dscm				ND
Concentration, ppbvd				ND
Emission Rate, lb/test period				ND
1,2-Dichloroethane				
Molecular Weight, g/g-mole	98.96	98.96	98.96	98.96
Target Catch, µg	ND	ND	ND	ND
Concentration, mg/dscm				ND
Concentration, ppbvd				ND
Emission Rate, lb/test period				ND
1,1-Dichloroethene				
Molecular Weight, g/g-mole	96.95	96.95	96.95	96.95
Target Catch, µg	ND	ND	ND	ND
Concentration, mg/dscm				ND
Concentration, ppbvd				ND
Emission Rate, lb/test period				ND
cis-1,2-Dichloroethene				
Molecular Weight, g/g-mole	96.95	96.95	96.95	96.95
Target Catch, µg	ND	ND	ND	ND
Concentration, mg/dscm				ND
Concentration, ppbvd				ND
Emission Rate, lb/test period				ND

94

* Note: Set T-V-4-4 includes analytical results for the tenax tube only; the tenax/charcoal tube was broken and could not be analyzed.

Summary of Stack Gas Parameters and Test Results
Volatile Organics - SW-846 Method 0030
Background Condition, Tunnel Exhaust Duct
Asphalt Plant C - California

Run Number	T-V-4-1	T-V-4-2	T-V-4-4 *	TOTAL
trans-1,2-Dichloroethene				
Molecular Weight, g/g-mole	96.95	96.95	96.95	96.95
Target Catch, µg	ND	ND	ND	ND
Concentration, mg/dscm				ND
Concentration, ppbvd				ND
Emission Rate, lb/test period				ND
1,2-Dichloropropane				
Molecular Weight, g/g-mole	112.99	112.99	112.99	112.99
Target Catch, µg	ND	ND	ND	ND
Concentration, mg/dscm				ND
Concentration, ppbvd				ND
Emission Rate, lb/test period				ND
cis-1,3-Dichloropropene				
Molecular Weight, g/g-mole	110.98	110.98	110.98	110.98
Target Catch, µg	ND	ND	ND	ND
Concentration, mg/dscm				ND
Concentration, ppbvd				ND
Emission Rate, lb/test period				ND
trans-1,3-Dichloropropene				
Molecular Weight, g/g-mole	110.98	110.98	110.98	110.98
Target Catch, µg	ND	ND	ND	ND
Concentration, mg/dscm				ND
Concentration, ppbvd				ND
Emission Rate, lb/test period				ND
1,2-Epoxybutane				
Molecular Weight, g/g-mole	72.12	72.12	72.12	72.12
Target Catch, µg	ND	ND	ND	ND
Concentration, mg/dscm				ND
Concentration, ppbvd				ND
Emission Rate, lb/test period				ND
Ethyl acrylate				
Molecular Weight, g/g-mole	100.11	100.11	100.11	100.11
Target Catch, µg	ND	ND	ND	ND
Concentration, mg/dscm				ND
Concentration, ppbvd				ND
Emission Rate, lb/test period				ND

95

* Note: Set T-V-4-4 includes analytical results for the tenax tube only; the tenax/charcoal tube was broken and could not be analyzed.

Summary of Stack Gas Parameters and Test Results
Volatile Organics - SW-846 Method 0030
Background Condition, Tunnel Exhaust Duct
Asphalt Plant C - California

Run Number	T-V-4-1	T-V-4-2	T-V-4-4 *	TOTAL
Ethylbenzene				
Molecular Weight, g/g-mole	106.16	106.16	106.16	106.16
Target Catch, µg	{0.019}	ND	{0.022}	(0.041)
Concentration, mg/dscm				(6.43E-04)
Concentration, ppbvd				(0.146)
Emission Rate, lb/test period				(3.25E-05)
n-Hexane				
Molecular Weight, g/g-mole	86.17	86.17	86.17	86.17
Target Catch, µg	{0.039}	{0.009}	{0.041}	{0.089}
Concentration, mg/dscm				{1.40E-03}
Concentration, ppbvd				{0.390}
Emission Rate, lb/test period				{7.05E-05}
2-Hexanone				
Molecular Weight, g/g-mole	100.16	100.16	100.16	100.16
Target Catch, µg	ND	ND	ND	ND
Concentration, mg/dscm				ND
Concentration, ppbvd				ND
Emission Rate, lb/test period				ND
Iodomethane				
Molecular Weight, g/g-mole	141.95	141.95	141.95	141.95
Target Catch, µg	ND	ND	ND	ND
Concentration, mg/dscm				ND
Concentration, ppbvd				ND
Emission Rate, lb/test period				ND
Isooctane				
Molecular Weight, g/g-mole	114.22	114.22	114.22	114.22
Target Catch, µg	{0.022}	ND	{0.010}	(0.032)
Concentration, mg/dscm				(5.02E-04)
Concentration, ppbvd				(0.106)
Emission Rate, lb/test period				(2.54E-05)
Methyl methacrylate				
Molecular Weight, g/g-mole	86.09	86.09	86.09	86.09
Target Catch, µg	ND	ND	ND	ND
Concentration, mg/dscm				ND
Concentration, ppbvd				ND
Emission Rate, lb/test period				ND

96

* Note: Set T-V-4-4 includes analytical results for the tenax tube only; the tenax/charcoal tube was broken and could not be analyzed.

Summary of Stack Gas Parameters and Test Results
Volatile Organics - SW-846 Method 0030
Background Condition, Tunnel Exhaust Duct
Asphalt Plant C - California

Run Number	T-V-4-1	T-V-4-2	T-V-4-4 *	TOTAL
Methylene chloride				
Molecular Weight, g/g-mole	84.94	84.94	84.94	84.94
Target Catch, µg	{0.365}	{2.340}	{0.009}	{2.714}
Concentration, mg/dscm				{4.26E-02}
Concentration, ppbvd				{12.1}
Emission Rate, lb/test period				{2.15E-03}
4-Methyl-2-pentanone				
Molecular Weight, g/g-mole	100.16	100.16	100.16	100.16
Target Catch, µg	ND	ND	ND	ND
Concentration, mg/dscm				ND
Concentration, ppbvd				ND
Emission Rate, lb/test period				ND
MTBE				
Molecular Weight, g/g-mole	88.15	88.15	88.15	88.15
Target Catch, µg	{0.128}	ND	{0.037}	(0.165)
Concentration, mg/dscm				(2.59E-03)
Concentration, ppbvd				(0.707)
Emission Rate, lb/test period				(1.31E-04)
Styrene				
Molecular Weight, g/g-mole	104.14	104.14	104.14	104.14
Target Catch, µg	{0.027}	{0.004}	{0.009}	{0.040}
Concentration, mg/dscm				{6.28E-04}
Concentration, ppbvd				{0.145}
Emission Rate, lb/test period				{3.17E-05}
1,1,2,2-Tetrachloroethane				
Molecular Weight, g/g-mole	167.86	167.86	167.86	167.86
Target Catch, µg	ND	ND	ND	ND
Concentration, mg/dscm				ND
Concentration, ppbvd				ND
Emission Rate, lb/test period				ND
Tetrachloroethene				
Molecular Weight, g/g-mole	165.85	165.85	165.85	165.85
Target Catch, µg	{0.016}	ND	{0.022}	(0.038)
Concentration, mg/dscm				(5.96E-04)
Concentration, ppbvd				(0.0865)
Emission Rate, lb/test period				(3.01E-05)

97

* Note: Set T-V-4-4 includes analytical results for the tenax tube only; the tenax/charcoal tube was broken and could not be analyzed.

Summary of Stack Gas Parameters and Test Results
Volatile Organics - SW-846 Method 0030
Background Condition, Tunnel Exhaust Duct
Asphalt Plant C - California

Run Number	T-V-4-1	T-V-4-2	T-V-4-4 *	TOTAL
Toluene				
Molecular Weight, g/g-mole	92.13	92.13	92.13	92.13
Target Catch, µg	{0.149}	{0.017}	0.158	{0.324}
Concentration, mg/dscm				{5.08E-03}
Concentration, ppbvd				{1.33}
Emission Rate, lb/test period				{2.57E-04}
1,1,1-Trichloroethane				
Molecular Weight, g/g-mole	133.42	133.42	133.42	133.42
Target Catch, µg	{0.012}	ND	ND	(0.012)
Concentration, mg/dscm				(1.88E-04)
Concentration, ppbvd				(0.0340)
Emission Rate, lb/test period				(9.51E-06)
1,1,2-Trichloroethane				
Molecular Weight, g/g-mole	133.42	133.42	133.42	133.42
Target Catch, µg	ND	ND	ND	ND
Concentration, mg/dscm				ND
Concentration, ppbvd				ND
Emission Rate, lb/test period				ND
Trichloroethene				
Molecular Weight, g/g-mole	131.40	131.40	131.40	131.40
Target Catch, µg	{0.001}	ND	ND	(0.001)
Concentration, mg/dscm				(1.57E-05)
Concentration, ppbvd				(0.00287)
Emission Rate, lb/test period				(7.93E-07)
Trichlorofluoromethane				
Molecular Weight, g/g-mole	137.38	137.38	137.38	137.38
Target Catch, µg	{0.024}	{0.003}	ND	(0.027)
Concentration, mg/dscm				(4.24E-04)
Concentration, ppbvd				(0.0742)
Emission Rate, lb/test period				(2.14E-05)
Vinyl acetate				
Molecular Weight, g/g-mole	86.09	86.09	86.09	86.09
Target Catch, µg	ND	ND	ND	ND
Concentration, mg/dscm				ND
Concentration, ppbvd				ND
Emission Rate, lb/test period				ND

98

* Note: Set T-V-4-4 includes analytical results for the tenax tube only; the tenax/charcoal tube was broken and could not be analyzed.

Summary of Stack Gas Parameters and Test Results
Volatile Organics - SW-846 Method 0030
Background Condition, Tunnel Exhaust Duct
Asphalt Plant C - California

Run Number	T-V-4-1	T-V-4-2	T-V-4-4 *	TOTAL
Vinyl bromide				
Molecular Weight, g/g-mole	106.96	106.96	106.96	106.96
Target Catch, µg	ND	ND	ND	ND
Concentration, mg/dscm				ND
Concentration, ppbvd				ND
Emission Rate, lb/test period				ND
Vinyl chloride				
Molecular Weight, g/g-mole	62.50	62.50	62.50	62.50
Target Catch, µg	ND	ND	ND	ND
Concentration, mg/dscm				ND
Concentration, ppbvd				ND
Emission Rate, lb/test period				ND
m-/p-Xylene				
Molecular Weight, g/g-mole	106.16	106.16	106.16	106.16
Target Catch, µg	{0.058}	ND	{0.057}	(0.115)
Concentration, mg/dscm				(1.80E-03)
Concentration, ppbvd				(0.409)
Emission Rate, lb/test period				(9.11E-05)
o-Xylene				
Molecular Weight, g/g-mole	106.16	106.16	106.16	106.16
Target Catch, µg	{0.025}	ND	{0.024}	(0.049)
Concentration, mg/dscm				(7.69E-04)
Concentration, ppbvd				(0.174)
Emission Rate, lb/test period				(3.88E-05)

ND indicates compound was not detected. A zero was used in the total and the value enclosed in parentheses ().
Estimated values and totals using estimated values are enclosed in brackets {}.

99

* Note: Set T-V-4-4 includes analytical results for the tenax tube only; the tenax/charcoal tube was broken and could not be analyzed.

Summary of Stack Gas Parameters and Test Results
SW-846 Method 0010 - Flow Rate Only
Tunnel Exhaust Duct
Asphalt Plant C - California
Page 1 of 1

	RUN NUMBER	**T-MM5-1**
	RUN DATE	**7/24/98**
	RUN TIME	**0720-1256**
	MEASURED DATA	
γ	Meter Box Correction Factor	1.000
ΔH	Avg Meter Orifice Pressure, in. H_2O	1.62
P_{bar}	Barometric Pressure, inches Hg	29.35
V_m	Sample Volume, ft^3	165.345
T_m	Average Meter Temperature, °F	74
P_{static}	Stack Static Pressure, inches H_2O	-4.7
T_s	Average Stack Temperature, °F	81
V_{lc}	Condensate Collected, ml	254.4
CO_2	Carbon Dioxide content, % by volume	0.0
O_2	Oxygen content, % by volume	20.9
N_2	Nitrogen content, % by volume	79.1
C_p	Pitot Tube Coefficient	0.84
$\Delta p^{1/2}$	Average Square Root Δp, (in. $H_2O)^{1/2}$	0.5799
Θ	Sample Run Duration, minutes	240
D_n	Nozzle Diameter, inches	0.252
	CALCULATED DATA	
A_n	Nozzle Area, ft^2	0.000346
$V_{m(std)}$	Standard Meter Volume, dscf	160.904
$V_{m(std)}$	Standard Meter Volume, dscm	4.556
P_s	Stack Pressure, inches Hg	29.00
B_{ws}	Moisture, % by volume	6.9
$B_{ws(sat)}$	Moisture (at saturation), % by volume	3.7
V_{wstd}	Standard Water Vapor Volume, ft^3	11.975
$1-B_{ws}$	Dry Mole Fraction	0.963
M_d	Molecular Weight (d.b.), lb/lb•mole	28.84
M_s	Molecular Weight (w.b.), lb/lb•mole	28.44
V_s	Stack Gas Velocity, ft/s	33.7
A	Stack Area, ft^2	5.59
Q_a	Stack Gas Volumetric flow, acfm	11,301
Q_s	Stack Gas Volumetric flow, dscfm	10,295
$Q_{s(cmm)}$	Stack Gas Volumetric flow, dscmm	292
I	Isokinetic Sampling Ratio, %	105.0

APPENDIX A.2

SED TEST RESULTS

Summary of Stack Gas Parameters and Test Results
PM and MCEM - EPA Method 315
Silo Exhaust Duct
Asphalt Plant C - California

	RUN NUMBER	S-M315-1	S-M315-2	S-M315-4	
	RUN DATE	7/24/98	7/25/98	7/28/98	Average
	RUN TIME	1141-1243	1015-1117	0649-0840	
	MEASURED DATA				
γ	Meter Box Correction Factor	1.007	1.007	1.007	1.007
ΔH	Avg Meter Orifice Pressure, in. H_2O	1.69	1.80	1.28	1.59
P_{bar}	Barometric Pressure, inches Hg	29.28	29.26	29.05	29.20
V_m	Sample Volume, ft^3	43.141	43.882	35.703	40.909
T_m	Average Meter Temperature, °F	94	101	84	93
P_{static}	Stack Static Pressure, inches H_2O	-0.25	-0.25	-0.25	-0.3
T_s	Average Stack Temperature, °F	256	270	228	251
V_{lc}	Condensate Collected, ml	157.7	283.1	643.3	361.4
CO_2	Carbon Dioxide content, % by volume	0.0	0.0	0.0	0.0
O_2	Oxygen content, % by volume	20.9	20.9	20.9	20.9
N_2	Nitrogen content, % by volume	79.1	79.1	79.1	79.1
C_p	Pitot Tube Coefficient	0.84	0.84	0.84	0.84
$\Delta p^{1/2}$	Average Square Root Δp, (in. $H_2O)^{1/2}$	0.3375	0.3483	0.3213	0.3357
Θ	Sample Run Duration, minutes	60	60	60	60
D_n	Nozzle Diameter, inches	0.380	0.380	0.433	0.398
	Tons of asphalt loaded per test period	336.7	282.7	402.4	340.6
	CALCULATED DATA				
A_n	Nozzle Area, ft^2	0.000788	0.000788	0.001023	0.000866
$V_{m(std)}$	Standard Meter Volume, dscf	40.646	40.819	33.959	38.475
$V_{m(std)}$	Standard Meter Volume, dscm	1.151	1.156	0.962	1.089
P_s	Stack Pressure, inches Hg	29.26	29.24	29.03	29.18
B_{ws}	Moisture, % by volume	15.4	24.6	47.1	29.1
V_{wstd}	Standard Water Vapor Volume, ft^3	7.423	13.326	30.280	17.010
$1-B_{ws}$	Dry Mole Fraction	0.846	0.754	0.529	0.709
M_d	Molecular Weight (d.b.), lb/lb•mole	28.84	28.84	28.84	28.84
M_s	Molecular Weight (w.b.), lb/lb•mole	27.16	26.17	23.73	25.69
V_s	Stack Gas Velocity, ft/s	23.0	24.4	23.1	23.5
A	Stack Area, ft^2	0.545	0.545	0.545	0.545
Q_a	Stack Gas Volumetric flow, acfm	753	800	754	769
Q_s	Stack Gas Volumetric flow, dscfm	459	426	297	394
$Q_{s(cmm)}$	Stack Gas Volumetric flow, dscmm	13.0	12.1	8.41	11.2
I	Isokinetic Sampling Ratio, %	102.3	110.6	101.7	104.9

Summary of Stack Gas Parameters and Test Results
PM and MCEM - EPA Method 315
Silo Exhaust Duct
Asphalt Plant C - California
Page 2 of 2

	RUN NUMBER	S-M315-1	S-M315-2	S-M315-4	
	RUN DATE	7/24/98	7/25/98	7/28/98	Average
	RUN TIME	1141-1243	1015-1117	0649-0840	
	EMISSIONS DATA				
	Particulate Matter				
PM	Target Catch, g	0.1342	0.0896	0.0533	
C_{PM}	Concentration, gr/dscf	5.10E-02	3.39E-02	2.42E-02	3.63E-02
C_{PM}	Concentration, g/dscm	1.17E-01	7.75E-02	5.54E-02	8.32E-02
E_{PM}	Emission Rate, lb/test period	2.00E-01	1.24E-01	6.16E-02	1.29E-01
	Emission Rate, lb/ton	5.95E-04	4.37E-04	1.53E-04	3.95E-04
	Methylene Chloride Extractable Matter				
M_{CEM}	Target Catch, g	0.0465	0.0327	0.0122	
C_{MCEM}	Concentration, gr/dscf	1.77E-02	1.24E-02	5.54E-03	1.19E-02
C_{MCEM}	Concentration, g/dscm	4.04E-02	2.83E-02	1.27E-02	2.71E-02
E_{MCEM}	Emission Rate, lb/test period	6.94E-02	4.51E-02	1.41E-02	4.29E-02
	Emission Rate, lb/ton	2.06E-04	1.60E-04	3.51E-05	1.34E-04

M315 Analytical Calculations
Run Number: S-M315-1

Particulate Matter (PM) Determinations					
Acetone Wash Blank PM Calculations					QC limit
M_a	Mass of residue of acetone, mg			0.1	
ρ_A	Density of acetone, mg/mL			785.1	
V_a	Volume of acetone blank, mL			200.3	
C_a	Acetone blank concentration, mg/mg			6.4E-07	
V_{aw}	Volume of acetone used in wash, mL			46.0	
W_a	Acetone wash blank, mg			0.023	0.036
Container Number	**Final weight grams**	**Tare of dish or beaker, g**	**Tare of filter, g**	**Weight Gain grams**	
1	157.0836	156.5417	0.4481	0.0938	
2	167.6684	167.6280		0.0404	
Total				0.1342	
Total particulate catch weight, in milligrams =				134.2	
Total particulate minus the acetone blank (W_a), mg =				134.18	

MeCl Extractable Matter (MCEM) Determinations					
Container Number	**Final weight in grams**	**Tare of dish, g**	**Weight Gain grams**	**Acetone Wash Volume, mL**	**MeCl Wash Volume, mL**
1	1.6484	1.6478	0.0006		
2+2M	1.6760	1.6363	0.0397	46	100
3W	1.6210	1.6170	0.0040		
3S	1.0212	1.0189	0.0023	129.15	129.15
Total			0.0466	175.15	229.15
		totals from line above are:	m_{total} in mg	sum of V_{aw}, mL	sum of V_{tw}, mL
			46.6	175.15	229.15

		Sample Data	QC limit
W_a	Acetone wash blank, mg	0.09	0.138
M_t	Mass of residue of MeCl blank, mg	0.0	
ρ_T	Density of MeCl, mg/mL	1316.8	
V_t	Volume of MeCl blank, mL	189.1	
C_t	MeCl blank concentration, mg/mg	0.00E+00	
W_t	MeCl wash blank, mg	0.00	0.483
F_b	Filter Blank, mg	0.0	
M_{MCEM}	Total MeCl Extractable Matter weight, mg	46.51	

M315 Analytical Calculations
Run Number: S-M315-2

Particulate Matter (PM) Determinations					
Acetone Wash Blank PM Calculations					QC limit
M_a	Mass of residue of acetone, mg			0.1	
ρ_A	Density of acetone, mg/mL			785.1	
V_a	Volume of acetone blank, mL			200.3	
C_a	Acetone blank concentration, mg/mg			6.4E-07	
V_{aw}	Volume of acetone used in wash, mL			71.1	
W_a	Acetone wash blank, mg			0.035	0.056

Container Number	Final weight grams	Tare of dish or beaker, g	Tare of filter, g	Weight Gain grams
1	187.9376	187.4323	0.4466	0.0587
2	178.7211	178.6901		0.0309
Total				0.0896
Total particulate catch weight, in milligrams =				89.6
Total particulate minus the acetone blank (W_a), mg =				89.6

MeCl Extractable Matter (MCEM) Determinations					
Container Number	Final weight in grams	Tare of dish, g	Weight Gain grams	Acetone Wash Volume, mL	MeCl Wash Volume, mL
1	1.6461	1.6454	0.0007		
2+2M	1.6874	1.6599	0.0275	71.1	100
3W	1.6180	1.6145	0.0035		
3S	1.0292	1.0281	0.0011	62.95	62.95
Total			0.0328	134.05	162.95
		totals from line above are:	m_{total} in mg	sum of V_{aw}, mL	sum of V_{tw}, mL
			32.8	134.05	162.95

		Sample Data	QC limit
W_a	Acetone wash blank, mg	0.07	0.105
M_t	Mass of residue of MeCl blank, mg	0.0	
ρ_T	Density of MeCl, mg/mL	1316.8	
V_t	Volume of MeCl blank, mL	189.1	
C_t	MeCl blank concentration, mg/mg	0.00E+00	
W_t	MeCl wash blank, mg	0.00	0.343
F_b	Filter Blank, mg	0.0	
M_{MCEM}	Total MeCl Extractable Matter weight, mg	32.73	

M315 Analytical Calculations
Run Number: S-M315-4

Particulate Matter (PM) Determinations					
Acetone Wash Blank PM Calculations					QC limit
M_a	Mass of residue of acetone, mg			0.1	
ρ_A	Density of acetone, mg/mL			785.1	
V_a	Volume of acetone blank, mL			200.3	
C_a	Acetone blank concentration, mg/mg			6.4E-07	
V_{aw}	Volume of acetone used in wash, mL			141.7	
W_a	Acetone wash blank, mg			0.071	0.111
Container Number	**Final weight grams**	**Tare of dish or beaker, g**	**Tare of filter, g**	**Weight Gain grams**	
1	166.2156	165.7223	0.4494	0.0439	
2	179.7134	179.7039		0.0095	
Total				0.0534	
Total particulate catch weight, in milligrams =				53.4	
Total particulate minus the acetone blank (W_a), mg =				53.33	

MeCl Extractable Matter (MCEM) Determinations					
Container Number	**Final weight in grams**	**Tare of dish, g**	**Weight Gain grams**	**Acetone Wash Volume, mL**	**MeCl Wash Volume, mL**
1	1.6516	1.6501	0.0015		
2+2M	1.6671	1.6598	0.0073	141.7	100
3W1	1.6011	1.6000	0.0011		
3W2	1.6064	1.6061	0.0003		
3W3	1.6139	1.6134	0.0005		
3W4	1.5938	1.5936	0.0002		
3S	1.0305	1.0291	0.0014	113	113
Total			0.0123	254.7	213
		totals from line above are:	m_{total} in mg	sum of V_{aw}, mL	sum of V_{tw}, mL
			12.3	254.7	213

		Sample Data	QC limit
W_a	Acetone wash blank, mg	0.13	0.200
M_t	Mass of residue of MeCl blank, mg	0.0	
ρ_T	Density of MeCl, mg/mL	1316.8	
V_t	Volume of MeCl blank, mL	189.1	
C_t	MeCl blank concentration, mg/mg	0.00E+00	
W_t	MeCl wash blank, mg	0.00	0.449
F_b	Filter Blank, mg	0.0	
M_{MCEM}	Total MeCl Extractable Matter weight, mg	12.17	

Summary of Stack Gas Parameters and Test Results
SW-846 Method 0010 - Flow Rates
Silo Exhaust Duct
Asphalt Plant C - California

	RUN NUMBER	S-MM5-1	S-MM5-3
	RUN DATE	7/24/98	7/27/98
	RUN TIME	0720-1018	0804-1050
	MEASURED DATA		
γ	Meter Box Correction Factor	1.007	1.007
ΔH	Avg Meter Orifice Pressure, in. H_2O	1.85	1.42
P_{bar}	Barometric Pressure, inches Hg	29.28	29.16
V_m	Sample Volume, ft^3	88.250	76.522
T_m	Average Meter Temperature, °F	84	101
P_{static}	Stack Static Pressure, inches H_2O	-0.25	-0.26
T_s	Average Stack Temperature, °F	235	229
V_{lc}	Condensate Collected, ml	265.7	2207.0
CO_2	Carbon Dioxide content, % by volume	0.0	0.0
O_2	Oxygen content, % by volume	20.9	20.9
N_2	Nitrogen content, % by volume	79.1	79.1
C_p	Pitot Tube Coefficient	0.84	0.84
$\Delta p^{1/2}$	Average Square Root Δp, (in. $H_2O)^{1/2}$	0.3554	0.3151
Θ	Sample Run Duration, minutes	120	120
D_n	Nozzle Diameter, inches	0.380	0.431
	CALCULATED DATA		
A_n	Nozzle Area, ft^2	0.000788	0.001013
$V_{m(std)}$	Standard Meter Volume, dscf	84.822	70.925
$V_{m(std)}$	Standard Meter Volume, dscm	2.402	2.008
P_s	Stack Pressure, inches Hg	29.26	29.14
B_{ws}	Moisture, % by volume	12.8	59.4
V_{wstd}	Standard Water Vapor Volume, ft^3	12.506	103.883
$1-B_{ws}$	Dry Mole Fraction	0.872	0.406
M_d	Molecular Weight (d.b.), lb/lb•mole	28.84	28.84
M_s	Molecular Weight (w.b.), lb/lb•mole	27.44	22.40
V_s	Stack Gas Velocity, ft/s	23.7	23.3
A	Stack Area, ft^2	0.545	0.545
Q_a	Stack Gas Volumetric flow, acfm	777	761
Q_s	Stack Gas Volumetric flow, dscfm	503	230
$Q_{s(cmm)}$	Stack Gas Volumetric flow, dscmm	14.2	6.52
I	Isokinetic Sampling Ratio, %	97.4	138.2

Summary of Stack Gas Parameters and Test Results
PAHs - SW-846 Method 0010
Silo Exhaust Duct
Asphalt Plant C - California
Page 1 of 5

	RUN NUMBER	S-MM5-2	S-MM5-4	S-MM5-5	
	RUN DATE	7/25/98	7/28/98	7/28/98	Average
	RUN TIME	0710-0950	0913-1323	1358-1940	
	MEASURED DATA				
γ	Meter Box Correction Factor	1.007	1.007	1.007	1.007
ΔH	Avg Meter Orifice Pressure, in. H_2O	1.83	0.611	2.28	1.58
P_{bar}	Barometric Pressure, inches Hg	29.26	29.05	29.05	29.12
V_m	Sample Volume, ft^3	88.998	52.202	98.934	80.045
T_m	Average Meter Temperature, °F	89	103	96	96
P_{static}	Stack Static Pressure, inches H_2O	-0.25	-0.25	-0.25	-0.25
T_s	Average Stack Temperature, °F	241	270	270	261
V_{lc}	Condensate Collected, ml	522.4	1133.6	1119.9	925.3
CO_2	Carbon Dioxide content, % by volume	0.0	0.0	0.0	0.0
O_2	Oxygen content, % by volume	20.9	20.9	20.9	20.9
N_2	Nitrogen content, % by volume	79.1	79.1	79.1	79.1
C_p	Pitot Tube Coefficient	0.84	0.84	0.84	0.84
$\Delta p^{1/2}$	Average Square Root Δp, (in. $H_2O)^{1/2}$	0.3481	0.2846	0.2895	0.3074
Θ	Sample Run Duration, minutes	120	120	120	120
D_n	Nozzle Diameter, inches	0.380	0.433	0.500	0.438
	Tons of asphalt loaded per test period	602.5	881.0	709.4	731.0
	CALCULATED DATA				
A_n	Nozzle Area, ft^2	0.000788	0.001023	0.001364	0.001058
$V_{m(std)}$	Standard Meter Volume, dscf	84.662	47.947	92.325	74.978
$V_{m(std)}$	Standard Meter Volume, dscm	2.397	1.358	2.614	2.123
P_s	Stack Pressure, inches Hg	29.24	29.03	29.03	29.10
B_{ws}	Moisture, % by volume	22.5	52.7	36.3	37.2
V_{wstd}	Standard Water Vapor Volume, ft^3	24.589	53.359	52.714	43.554
$1-B_{ws}$	Dry Mole Fraction	0.775	0.473	0.637	0.628
M_d	Molecular Weight (d.b.), lb/lb•mole	28.84	28.84	28.84	28.84
M_s	Molecular Weight (w.b.), lb/lb•mole	26.40	23.13	24.90	24.81
V_s	Stack Gas Velocity, ft/s	23.8	21.3	20.9	22.0
A	Stack Area, ft^2	0.545	0.545	0.545	0.545
Q_a	Stack Gas Volumetric flow, acfm	780	698	684	720
Q_s	Stack Gas Volumetric flow, dscfm	445	232	305	327
$Q_{s(cmm)}$	Stack Gas Volumetric flow, dscmm	12.6	6.56	8.64	9.26
I	Isokinetic Sampling Ratio, %	109.9	92.1	100.8	100.9

Summary of Stack Gas Parameters and Test Results
PAHs - SW-846 Method 0010
Silo Exhaust Duct
Asphalt Plant C - California

	S-MM5-2	S-MM5-4	S-MM5-5	Average
Acenaphthene				
Molecular Weight, g/g-mole	154.21	154.21	154.21	
Target Catch, µg	190	170	370	243
Concentration, mg/dscm [a]	7.92E-02	1.25E-01	1.42E-01	1.15E-01
Concentration, ppbvd [b]	1.24E+01	1.95E+01	2.21E+01	1.80E+01
Emission Rate, lb/test period [c]	2.64E-04	2.17E-04	3.24E-04	2.68E-04
Emission Rate, lb/ton [d]	4.38E-07	2.46E-07	4.56E-07	3.80E-07
Acenaphthylene				
Molecular Weight, g/g-mole	154.21	154.21	154.21	
Target Catch, µg	ND	ND	22	(7.33)
Concentration, mg/dscm [a]	ND	ND	8.41E-03	(2.80E-03)
Concentration, ppbvd [b]	ND	ND	1.31E+00	(4.38E-01)
Emission Rate, lb/test period [c]	ND	ND	1.92E-05	(6.42E-06)
Emission Rate, lb/ton [d]	ND	ND	2.71E-08	(9.04E-09)
Anthracene				
Molecular Weight, g/g-mole	178.22	178.22	178.22	
Target Catch, µg	57	56	94	69.0
Concentration, mg/dscm [a]	2.38E-02	4.12E-02	3.60E-02	3.37E-02
Concentration, ppbvd [b]	3.21E+00	5.57E+00	4.85E+00	4.54E+00
Emission Rate, lb/test period [c]	7.92E-05	7.15E-05	8.22E-05	7.77E-05
Emission Rate, lb/ton [d]	1.31E-07	8.12E-08	1.16E-07	1.10E-07
Benzo(a)anthracene				
Molecular Weight, g/g-mole	228.29	228.29	228.29	
Target Catch, µg	17	26	43	28.7
Concentration, mg/dscm [a]	7.09E-03	1.91E-02	1.64E-02	1.42E-02
Concentration, ppbvd [b]	7.47E-01	2.02E+00	1.73E+00	1.50E+00
Emission Rate, lb/test period [c]	2.36E-05	3.32E-05	3.76E-05	3.15E-05
Emission Rate, lb/ton [d]	3.92E-08	3.77E-08	5.30E-08	4.33E-08
Benzo(b)fluoranthene				
Molecular Weight, g/g-mole	252.32	252.32	252.32	
Target Catch, µg	ND	ND	ND	ND
Concentration, mg/dscm [a]	ND	ND	ND	ND
Concentration, ppbvd [b]	ND	ND	ND	ND
Emission Rate, lb/test period [c]	ND	ND	ND	ND
Emission Rate, lb/ton [d]	ND	ND	ND	ND

Summary of Stack Gas Parameters and Test Results
PAHs - SW-846 Method 0010
Silo Exhaust Duct
Asphalt Plant C - California

	S-MM5-2	S-MM5-4	S-MM5-5	Average
Benzo(k)fluoranthene				
Molecular Weight, g/g-mole	252.32	252.32	252.32	
Target Catch, µg	ND	ND	ND	ND
Concentration, mg/dscm [a]	ND	ND	ND	ND
Concentration, ppbvd [b]	ND	ND	ND	ND
Emission Rate, lb/test period [c]	ND	ND	ND	ND
Emission Rate, lb/ton [d]	ND	ND	ND	ND
Benzo(g,h,i)perylene				
Molecular Weight, g/g-mole	276.34	276.34	276.34	
Target Catch, µg	ND	ND	ND	ND
Concentration, mg/dscm [a]	ND	ND	ND	ND
Concentration, ppbvd [b]	ND	ND	ND	ND
Emission Rate, lb/test period [c]	ND	ND	ND	ND
Emission Rate, lb/ton [d]	ND	ND	ND	ND
Benzo(a)pyrene				
Molecular Weight, g/g-mole	252.30	252.30	252.30	
Target Catch, µg	ND	ND	ND	ND
Concentration, mg/dscm [a]	ND	ND	ND	ND
Concentration, ppbvd [b]	ND	ND	ND	ND
Emission Rate, lb/test period [c]	ND	ND	ND	ND
Emission Rate, lb/ton [d]	ND	ND	ND	ND
Benzo(e)pyrene				
Molecular Weight, g/g-mole	252.30	252.30	252.30	
Target Catch, µg	ND	ND	15	(5.00)
Concentration, mg/dscm [a]	ND	ND	5.74E-03	(1.91E-03)
Concentration, ppbvd [b]	ND	ND	5.47E-01	(1.82E-01)
Emission Rate, lb/test period [c]	ND	ND	1.31E-05	(4.37E-06)
Emission Rate, lb/ton [d]	ND	ND	1.85E-08	(6.17E-09)
Chrysene				
Molecular Weight, g/g-mole	228.28	228.28	228.28	
Target Catch, µg	64	97	160	107
Concentration, mg/dscm [a]	2.67E-02	7.14E-02	6.12E-02	5.31E-02
Concentration, ppbvd [b]	2.81E+00	7.53E+00	6.45E+00	5.60E+00
Emission Rate, lb/test period [c]	8.89E-05	1.24E-04	1.40E-04	1.18E-04
Emission Rate, lb/ton [d]	1.48E-07	1.41E-07	1.97E-07	1.62E-07

111

Summary of Stack Gas Parameters and Test Results
PAHs - SW-846 Method 0010
Silo Exhaust Duct
Asphalt Plant C - California

	S-MM5-2	S-MM5-4	S-MM5-5	Average
Dibenz(a,h)anthracene				
Molecular Weight, g/g-mole	278.33	278.33	278.33	
Target Catch, µg	ND	ND	ND	ND
Concentration, mg/dscm [a]	ND	ND	ND	ND
Concentration, ppbvd [b]	ND	ND	ND	ND
Emission Rate, lb/test period [c]	ND	ND	ND	ND
Emission Rate, lb/ton [d]	ND	ND	ND	ND
Fluoranthene				
Molecular Weight, g/g-mole	202.26	202.26	202.26	
Target Catch, µg	55	67	100	74.0
Concentration, mg/dscm [a]	2.29E-02	4.93E-02	3.82E-02	3.68E-02
Concentration, ppbvd [b]	2.73E+00	5.87E+00	4.55E+00	4.38E+00
Emission Rate, lb/test period [c]	7.64E-05	8.56E-05	8.75E-05	8.32E-05
Emission Rate, lb/ton [d]	1.27E-07	9.71E-08	1.23E-07	1.16E-07
Fluorene				
Molecular Weight, g/g-mole	166.21	166.21	166.21	
Target Catch, µg	600	340	640	527
Concentration, mg/dscm [a]	2.50E-01	2.50E-01	2.45E-01	2.48E-01
Concentration, ppbvd [b]	3.62E+01	3.62E+01	3.54E+01	3.60E+01
Emission Rate, lb/test period [c]	8.34E-04	4.34E-04	5.60E-04	6.09E-04
Emission Rate, lb/ton [d]	1.38E-06	4.93E-07	7.89E-07	8.89E-07
Indeno(1,2,3-cd)pyrene				
Molecular Weight, g/g-mole	290.34	290.34	290.34	
Target Catch, µg	ND	ND	ND	ND
Concentration, mg/dscm [a]	ND	ND	ND	ND
Concentration, ppbvd [b]	ND	ND	ND	ND
Emission Rate, lb/test period [c]	ND	ND	ND	ND
Emission Rate, lb/ton [d]	ND	ND	ND	ND
2-Methylnaphthalene				
Molecular Weight, g/g-mole	142.20	142.20	142.20	
Target Catch, µg	2,800	2,000	3,400	2,733
Concentration, mg/dscm [a]	1.17E+00	1.47E+00	1.30E+00	1.31E+00
Concentration, ppbvd [b]	1.98E+02	2.49E+02	2.20E+02	2.22E+02
Emission Rate, lb/test period [c]	3.89E-03	2.55E-03	2.97E-03	3.14E-03
Emission Rate, lb/ton [d]	6.46E-06	2.90E-06	4.19E-06	4.52E-06

Summary of Stack Gas Parameters and Test Results
PAHs - SW-846 Method 0010
Silo Exhaust Duct
Asphalt Plant C - California

	S-MM5-2	S-MM5-4	S-MM5-5	Average
Naphthalene				
Molecular Weight, g/g-mole	128.16	128.16	128.16	
Target Catch, µg	800	720	1,300	940
Concentration, mg/dscm [a]	3.34E-01	5.30E-01	4.97E-01	4.54E-01
Concentration, ppbvd [b]	6.26E+01	9.95E+01	9.33E+01	8.52E+01
Emission Rate, lb/test period [c]	1.11E-03	9.20E-04	1.14E-03	1.06E-03
Emission Rate, lb/ton [d]	1.84E-06	1.04E-06	1.60E-06	1.50E-06
Perylene				
Molecular Weight, g/g-mole	252.30	252.30	252.30	
Target Catch, µg	21	ND	28	(16.3)
Concentration, mg/dscm [a]	8.76E-03	ND	1.07E-02	(6.49E-03)
Concentration, ppbvd [b]	8.35E-01	ND	1.02E+00	(6.19E-01)
Emission Rate, lb/test period [c]	2.92E-05	ND	2.45E-05	(1.79E-05)
Emission Rate, lb/ton [d]	4.84E-08	ND	3.45E-08	(2.77E-08)
Phenanthrene				
Molecular Weight, g/g-mole	178.22	178.22	178.22	
Target Catch, µg	970	640	1,200	937
Concentration, mg/dscm [a]	4.05E-01	4.71E-01	4.59E-01	4.45E-01
Concentration, ppbvd [b]	5.46E+01	6.36E+01	6.19E+01	6.01E+01
Emission Rate, lb/test period [c]	1.35E-03	8.18E-04	1.05E-03	1.07E-03
Emission Rate, lb/ton [d]	2.24E-06	9.28E-07	1.48E-06	1.55E-06
Pyrene				
Molecular Weight, g/g-mole	202.24	202.24	202.24	
Target Catch, µg	230	170	290	230
Concentration, mg/dscm [a]	9.59E-02	1.25E-01	1.11E-01	1.11E-01
Concentration, ppbvd [b]	1.14E+01	1.49E+01	1.32E+01	1.32E+01
Emission Rate, lb/test period [c]	3.20E-04	2.17E-04	2.54E-04	2.63E-04
Emission Rate, lb/ton [d]	5.30E-07	2.46E-07	3.58E-07	3.78E-07

[a] Milligrams per dry standard cubic meter at 68° F (20° C) and 1 atm.

[b] Parts per billion by volume.

[c] Pounds per test period.

[d] Pounds per ton of asphalt loaded.

ND Not Detectable - Results are below target analyte detection limit. Values are counted as zero.

Summary of Stack Gas Parameters and Test Results
Semi-volatile Organics - SW-846 Method 0010
Silo Exhaust Duct
Asphalt Plant C - California

	RUN NUMBER	S-MM5-2	S-MM5-4	S-MM5-5	
	RUN DATE	7/25/98	7/28/98	7/28/98	Average
	RUN TIME	0710-0950	0913-1323	1358-1940	
	MEASURED DATA				
γ	Meter Box Correction Factor	1.007	1.007	1.007	1.007
ΔH	Avg Meter Orifice Pressure, in. H_2O	1.83	0.611	2.28	1.58
P_{bar}	Barometric Pressure, inches Hg	29.26	29.05	29.05	29.12
V_m	Sample Volume, ft^3	88.998	52.202	98.934	80.045
T_m	Average Meter Temperature, °F	89	103	96	96
P_{static}	Stack Static Pressure, inches H_2O	-0.25	-0.25	-0.25	-0.25
T_s	Average Stack Temperature, °F	241	270	270	261
V_{lc}	Condensate Collected, ml	522.4	1133.6	1119.9	925.3
CO_2	Carbon Dioxide content, % by volum	0.0	0.0	0.0	0.0
O_2	Oxygen content, % by volume	20.9	20.9	20.9	20.9
N_2	Nitrogen content, % by volume	79.1	79.1	79.1	79.1
C_p	Pitot Tube Coefficient	0.84	0.84	0.84	0.84
$\Delta p^{1/2}$	Average Square Root Δp, (in. $H_2O)^{1/2}$	0.3481	0.2846	0.2895	0.3074
Θ	Sample Run Duration, minutes	120	120	120	120
D_n	Nozzle Diameter, inches	0.380	0.433	0.500	0.438
	Tons of Asphalt loaded per hour	602.5	881.0	709.4	731.0
	CALCULATED DATA				
A_n	Nozzle Area, ft^2	0.000788	0.001023	0.001364	0.001058
$V_{m(std)}$	Standard Meter Volume, dscf	84.662	47.947	92.325	74.978
$V_{m(std)}$	Standard Meter Volume, dscm	2.397	1.358	2.614	2.123
P_s	Stack Pressure, inches Hg	29.24	29.03	29.03	29.10
B_{ws}	Moisture, % by volume	22.5	52.7	36.3	37.2
V_{wstd}	Standard Water Vapor Volume, ft^3	24.589	53.359	52.714	43.554
$1-B_{ws}$	Dry Mole Fraction	0.775	0.473	0.637	0.628
M_d	Molecular Weight (d.b.), lb/lb•mole	28.84	28.84	28.84	28.84
M_s	Molecular Weight (w.b.), lb/lb•mole	26.40	23.13	24.90	24.81
V_s	Stack Gas Velocity, ft/s	23.8	21.3	20.9	22.0
A	Stack Area, ft^2	0.545	0.545	0.545	0.545
Q_a	Stack Gas Volumetric flow, acfm	780	698	684	720
Q_s	Stack Gas Volumetric flow, dscfm	445	232	305	327
$Q_{s(cmm)}$	Stack Gas Volumetric flow, dscmm	12.6	6.56	8.64	9.26
I	Isokinetic Sampling Ratio, %	109.9	92.1	100.8	100.9

Summary of Stack Gas Parameters and Test Results
Semi-volatile Organics - SW-846 Method 0010
Silo Exhaust Duct
Asphalt Plant C - California

	S-MM5-2	S-MM5-4	S-MM5-5	Average
Acenaphthene				
Molecular Weight, g/g-mole	154.21	154.21	154.21	
Target Catch, µg	ND	ND	ND	ND
Concentration, mg/dscm [a]	ND	ND	ND	ND
Concentration, ppbvd [b]	ND	ND	ND	ND
Emission Rate, lb/test period [c]	ND	ND	ND	ND
Emission Rate, lb/ton [d]	ND	ND	ND	ND
Acenaphthylene				
Molecular Weight, g/g-mole	154.21	154.21	154.21	
Target Catch, µg	ND	ND	ND	ND
Concentration, mg/dscm [a]	ND	ND	ND	ND
Concentration, ppbvd [b]	ND	ND	ND	ND
Emission Rate, lb/hr [c]	ND	ND	ND	ND
Emission Rate, lb/ton [d]	ND	ND	ND	ND
Acetophenone				
Molecular Weight, g/g-mole	120.15	120.15	120.15	
Target Catch, µg	ND	ND	ND	ND
Concentration, mg/dscm [a]	ND	ND	ND	ND
Concentration, ppbvd [b]	ND	ND	ND	ND
Emission Rate, lb/test period [c]	ND	ND	ND	ND
Emission Rate, lb/ton [d]	ND	ND	ND	ND
4-Aminobiphenyl				
Molecular Weight, g/g-mole	169.22	169.22	169.22	
Target Catch, µg	ND	ND	ND	ND
Concentration, mg/dscm [a]	ND	ND	ND	ND
Concentration, ppbvd [b]	ND	ND	ND	ND
Emission Rate, lb/test period [c]	ND	ND	ND	ND
Emission Rate, lb/ton [d]	ND	ND	ND	ND
Aniline				
Molecular Weight, g/g-mole	93.12	93.12	93.12	
Target Catch, µg	ND	ND	ND	ND
Concentration, mg/dscm [a]	ND	ND	ND	ND
Concentration, ppbvd [b]	ND	ND	ND	ND
Emission Rate, lb/test period [c]	ND	ND	ND	ND
Emission Rate, lb/ton [d]	ND	ND	ND	ND

Summary of Stack Gas Parameters and Test Results
Semi-volatile Organics - SW-846 Method 0010
Silo Exhaust Duct
Asphalt Plant C - California

	S-MM5-2	S-MM5-4	S-MM5-5	Average
Anthracene				
Molecular Weight, g/g-mole	178.22	178.22	178.22	
Target Catch, µg	ND	ND	ND	ND
Concentration, mg/dscm [a]	ND	ND	ND	ND
Concentration, ppbvd [b]	ND	ND	ND	ND
Emission Rate, lb/test period [c]	ND	ND	ND	ND
Emission Rate, lb/ton [d]	ND	ND	ND	ND
Benzidine				
Molecular Weight, g/g-mole	184.23	184.23	184.23	
Target Catch, µg	ND	ND	ND	ND
Concentration, mg/dscm [a]	ND	ND	ND	ND
Concentration, ppbvd [b]	ND	ND	ND	ND
Emission Rate, lb/test period [c]	ND	ND	ND	ND
Emission Rate, lb/ton [d]	ND	ND	ND	ND
Benzo(a)anthracene				
Molecular Weight, g/g-mole	228.29	228.29	228.29	
Target Catch, µg	ND	ND	ND	ND
Concentration, mg/dscm [a]	ND	ND	ND	ND
Concentration, ppbvd [b]	ND	ND	ND	ND
Emission Rate, lb/test period [c]	ND	ND	ND	ND
Emission Rate, lb/ton [d]	ND	ND	ND	ND
Benzo(b)fluoranthene				
Molecular Weight, g/g-mole	252.32	252.32	252.32	
Target Catch, µg	ND	ND	ND	ND
Concentration, mg/dscm [a]	ND	ND	ND	ND
Concentration, ppbvd [b]	ND	ND	ND	ND
Emission Rate, lb/test period [c]	ND	ND	ND	ND
Emission Rate, lb/ton [d]	ND	ND	ND	ND
Benzo(k)fluoranthene				
Molecular Weight, g/g-mole	252.32	252.32	252.32	
Target Catch, µg	ND	ND	ND	ND
Concentration, mg/dscm [a]	ND	ND	ND	ND
Concentration, ppbvd [b]	ND	ND	ND	ND
Emission Rate, lb/test period [c]	ND	ND	ND	ND
Emission Rate, lb/ton [d]	ND	ND	ND	ND

Summary of Stack Gas Parameters and Test Results
Semi-volatile Organics - SW-846 Method 0010
Silo Exhaust Duct
Asphalt Plant C - California

	S-MM5-2	S-MM5-4	S-MM5-5	Average
Benzoic acid				
Molecular Weight, g/g-mole	122.12	122.12	122.12	
Target Catch, µg	ND	ND	ND	ND
Concentration, mg/dscm [a]	ND	ND	ND	ND
Concentration, ppbvd [b]	ND	ND	ND	ND
Emission Rate, lb/test period [c]	ND	ND	ND	ND
Emission Rate, lb/ton [d]	ND	ND	ND	ND
Benzo(g,h,i)perylene				
Molecular Weight, g/g-mole	276.34	276.34	276.34	
Target Catch, µg	ND	ND	ND	ND
Concentration, mg/dscm [a]	ND	ND	ND	ND
Concentration, ppbvd [b]	ND	ND	ND	ND
Emission Rate, lb/test period [c]	ND	ND	ND	ND
Emission Rate, lb/ton [d]	ND	ND	ND	ND
Benzo(a)pyrene				
Molecular Weight, g/g-mole	252.30	252.30	252.30	
Target Catch, µg	ND	ND	ND	ND
Concentration, mg/dscm [a]	ND	ND	ND	ND
Concentration, ppbvd [b]	ND	ND	ND	ND
Emission Rate, lb/test period [c]	ND	ND	ND	ND
Emission Rate, lb/ton [d]	ND	ND	ND	ND
Benzo(e)pyrene				
Molecular Weight, g/g-mole	252.30	252.30	252.30	
Target Catch, µg	ND	ND	ND	ND
Concentration, mg/dscm [a]	ND	ND	ND	ND
Concentration, ppbvd [b]	ND	ND	ND	ND
Emission Rate, lb/test period [c]	ND	ND	ND	ND
Emission Rate, lb/ton [d]	ND	ND	ND	ND
Benzyl alcohol				
Molecular Weight, g/g-mole	108.13	108.13	108.13	
Target Catch, µg	ND	ND	ND	ND
Concentration, mg/dscm [a]	ND	ND	ND	ND
Concentration, ppbvd [b]	ND	ND	ND	ND
Emission Rate, lb/test period [c]	ND	ND	ND	ND
Emission Rate, lb/ton [d]	ND	ND	ND	ND

Summary of Stack Gas Parameters and Test Results
Semi-volatile Organics - SW-846 Method 0010
Silo Exhaust Duct
Asphalt Plant C - California

	S-MM5-2	S-MM5-4	S-MM5-5	Average
Biphenyl				
Molecular Weight, g/g-mole	154.20	154.20	154.20	
Target Catch, µg	ND	ND	ND	ND
Concentration, mg/dscm [a]	ND	ND	ND	ND
Concentration, ppbvd [b]	ND	ND	ND	ND
Emission Rate, lb/test period [c]	ND	ND	ND	ND
Emission Rate, lb/ton [d]	ND	ND	ND	ND
4-Bromophenyl phenyl ether				
Molecular Weight, g/g-mole	249.11	249.11	249.11	
Target Catch, µg	ND	ND	ND	ND
Concentration, mg/dscm [a]	ND	ND	ND	ND
Concentration, ppbvd [b]	ND	ND	ND	ND
Emission Rate, lb/test period [c]	ND	ND	ND	ND
Emission Rate, lb/ton [d]	ND	ND	ND	ND
Butyl benzyl phthalate				
Molecular Weight, g/g-mole	312.36	312.36	312.36	
Target Catch, µg	ND	ND	ND	ND
Concentration, mg/dscm [a]	ND	ND	ND	ND
Concentration, ppbvd [b]	ND	ND	ND	ND
Emission Rate, lb/test period [c]	ND	ND	ND	ND
Emission Rate, lb/ton [d]	ND	ND	ND	ND
Chloroacetophenone				
Molecular Weight, g/g-mole	154.59	154.59	154.59	
Target Catch, µg	ND	ND	ND	ND
Concentration, mg/dscm [a]	ND	ND	ND	ND
Concentration, ppbvd [b]	ND	ND	ND	ND
Emission Rate, lb/test period [c]	ND	ND	ND	ND
Emission Rate, lb/ton [d]	ND	ND	ND	ND
4-Chloroaniline				
Molecular Weight, g/g-mole	127.57	127.57	127.57	
Target Catch, µg	ND	ND	ND	ND
Concentration, mg/dscm [a]	ND	ND	ND	ND
Concentration, ppbvd [b]	ND	ND	ND	ND
Emission Rate, lb/test period [c]	ND	ND	ND	ND
Emission Rate, lb/ton [d]	ND	ND	ND	ND

Summary of Stack Gas Parameters and Test Results
Semi-volatile Organics - SW-846 Method 0010
Silo Exhaust Duct
Asphalt Plant C - California

	S-MM5-2	S-MM5-4	S-MM5-5	Average
bis(2-Chloroethoxy)-methane				
Molecular Weight, g/g-mole	173.04	173.04	173.04	
Target Catch, µg	ND	ND	ND	ND
Concentration, mg/dscm [a]	ND	ND	ND	ND
Concentration, ppbvd [b]	ND	ND	ND	ND
Emission Rate, lb/test period [c]	ND	ND	ND	ND
Emission Rate, lb/ton [d]	ND	ND	ND	ND
bis(2-Chloroethyl) ether				
Molecular Weight, g/g-mole	143.02	143.02	143.02	
Target Catch, µg	ND	ND	ND	ND
Concentration, mg/dscm [a]	ND	ND	ND	ND
Concentration, ppbvd [b]	ND	ND	ND	ND
Emission Rate, lb/test period [c]	ND	ND	ND	ND
Emission Rate, lb/ton [d]	ND	ND	ND	ND
4-Chloro-3-methylphenol				
Molecular Weight, g/g-mole	142.58	142.58	142.58	
Target Catch, µg	ND	ND	ND	ND
Concentration, mg/dscm [a]	ND	ND	ND	ND
Concentration, ppbvd [b]	ND	ND	ND	ND
Emission Rate, lb/test period [c]	ND	ND	ND	ND
Emission Rate, lb/ton [d]	ND	ND	ND	ND
2-Chloronaphthalene				
Molecular Weight, g/g-mole	162.61	162.61	162.61	
Target Catch, µg	ND	ND	ND	ND
Concentration, mg/dscm [a]	ND	ND	ND	ND
Concentration, ppbvd [b]	ND	ND	ND	ND
Emission Rate, lb/test period [c]	ND	ND	ND	ND
Emission Rate, lb/ton [d]	ND	ND	ND	ND
2-Chlorophenol				
Molecular Weight, g/g-mole	128.56	128.56	128.56	
Target Catch, µg	ND	ND	ND	ND
Concentration, mg/dscm [a]	ND	ND	ND	ND
Concentration, ppbvd [b]	ND	ND	ND	ND
Emission Rate, lb/test period [c]	ND	ND	ND	ND
Emission Rate, lb/ton [d]	ND	ND	ND	ND

Summary of Stack Gas Parameters and Test Results
Semi-volatile Organics - SW-846 Method 0010
Silo Exhaust Duct
Asphalt Plant C - California

	S-MM5-2	S-MM5-4	S-MM5-5	Average
4-Chlorophenyl phenyl ether				
Molecular Weight, g/g-mole	204.66	204.66	204.66	
Target Catch, µg	ND	ND	ND	ND
Concentration, mg/dscm [a]	ND	ND	ND	ND
Concentration, ppbvd [b]	ND	ND	ND	ND
Emission Rate, lb/test period [c]	ND	ND	ND	ND
Emission Rate, lb/ton [d]	ND	ND	ND	ND
Chrysene				
Molecular Weight, g/g-mole	228.28	228.28	228.28	
Target Catch, µg	ND	ND	ND	ND
Concentration, mg/dscm [a]	ND	ND	ND	ND
Concentration, ppbvd [b]	ND	ND	ND	ND
Emission Rate, lb/test period [c]	ND	ND	ND	ND
Emission Rate, lb/ton [d]	ND	ND	ND	ND
Cumene				
Molecular Weight, g/g-mole	120.19	120.19	120.19	
Target Catch, µg	ND	ND	ND	ND
Concentration, mg/dscm [a]	ND	ND	ND	ND
Concentration, ppbvd [b]	ND	ND	ND	ND
Emission Rate, lb/test period [c]	ND	ND	ND	ND
Emission Rate, lb/ton [d]	ND	ND	ND	ND
Dibenz(a,h)anthracene				
Molecular Weight, g/g-mole	278.33	278.33	278.33	
Target Catch, µg	ND	ND	ND	ND
Concentration, mg/dscm [a]	ND	ND	ND	ND
Concentration, ppbvd [b]	ND	ND	ND	ND
Emission Rate, lb/test period [c]	ND	ND	ND	ND
Emission Rate, lb/ton [d]	ND	ND	ND	ND
Dibenzofuran				
Molecular Weight, g/g-mole	168.20	168.20	168.20	
Target Catch, µg	ND	ND	ND	ND
Concentration, mg/dscm [a]	ND	ND	ND	ND
Concentration, ppbvd [b]	ND	ND	ND	ND
Emission Rate, lb/test period [c]	ND	ND	ND	ND
Emission Rate, lb/ton [d]	ND	ND	ND	ND

Summary of Stack Gas Parameters and Test Results
Semi-volatile Organics - SW-846 Method 0010
Silo Exhaust Duct
Asphalt Plant C - California

	S-MM5-2	S-MM5-4	S-MM5-5	Average
1,2-Dibromo-3-chloropropane (DBCP)				
Molecular Weight, g/g-mole	236.36	236.36	236.36	
Target Catch, µg	ND	ND	ND	ND
Concentration, mg/dscm [a]	ND	ND	ND	ND
Concentration, ppbvd [b]	ND	ND	ND	ND
Emission Rate, lb/test period [c]	ND	ND	ND	ND
Emission Rate, lb/ton [d]	ND	ND	ND	ND
Di-n-butyl phthalate				
Molecular Weight, g/g-mole	278.34	278.34	278.34	
Target Catch, µg	ND	ND	ND	ND
Concentration, mg/dscm [a]	ND	ND	ND	ND
Concentration, ppbvd [b]	ND	ND	ND	ND
Emission Rate, lb/test period [c]	ND	ND	ND	ND
Emission Rate, lb/ton [d]	ND	ND	ND	ND
1,2-Dichlorobenzene				
Molecular Weight, g/g-mole	147.01	147.01	147.01	
Target Catch, µg	ND	ND	ND	ND
Concentration, mg/dscm [a]	ND	ND	ND	ND
Concentration, ppbvd [b]	ND	ND	ND	ND
Emission Rate, lb/test period [c]	ND	ND	ND	ND
Emission Rate, lb/ton [d]	ND	ND	ND	ND
1,3-Dichlorobenzene				
Molecular Weight, g/g-mole	147.01	147.01	147.01	
Target Catch, µg	ND	ND	ND	ND
Concentration, mg/dscm [a]	ND	ND	ND	ND
Concentration, ppbvd [b]	ND	ND	ND	ND
Emission Rate, lb/test period [c]	ND	ND	ND	ND
Emission Rate, lb/ton [d]	ND	ND	ND	ND
1,4-Dichlorobenzene				
Molecular Weight, g/g-mole	147.01	147.01	147.01	
Target Catch, µg	ND	ND	ND	ND
Concentration, mg/dscm [a]	ND	ND	ND	ND
Concentration, ppbvd [b]	ND	ND	ND	ND
Emission Rate, lb/test period [c]	ND	ND	ND	ND
Emission Rate, lb/ton [d]	ND	ND	ND	ND

Summary of Stack Gas Parameters and Test Results
Semi-volatile Organics - SW-846 Method 0010
Silo Exhaust Duct
Asphalt Plant C - California

	S-MM5-2	S-MM5-4	S-MM5-5	Average
3,3'-Dichlorobenzidine				
Molecular Weight, g/g-mole	253.13	253.13	253.13	
Target Catch, µg	ND	ND	ND	ND
Concentration, mg/dscm [a]	ND	ND	ND	ND
Concentration, ppbvd [b]	ND	ND	ND	ND
Emission Rate, lb/test period [c]	ND	ND	ND	ND
Emission Rate, lb/ton [d]	ND	ND	ND	ND
2,4-Dichlorophenol				
Molecular Weight, g/g-mole	163.01	163.01	163.01	
Target Catch, µg	ND	ND	ND	ND
Concentration, mg/dscm [a]	ND	ND	ND	ND
Concentration, ppbvd [b]	ND	ND	ND	ND
Emission Rate, lb/test period [c]	ND	ND	ND	ND
Emission Rate, lb/ton [d]	ND	ND	ND	ND
Diethyl phthalate				
Molecular Weight, g/g-mole	222.24	222.24	222.24	
Target Catch, µg	ND	ND	ND	ND
Concentration, mg/dscm [a]	ND	ND	ND	ND
Concentration, ppbvd [b]	ND	ND	ND	ND
Emission Rate, lb/test period [c]	ND	ND	ND	ND
Emission Rate, lb/ton [d]	ND	ND	ND	ND
N-N-Diethylaniline				
Molecular Weight, g/g-mole	149.23	149.23	149.23	
Target Catch, µg	ND	ND	ND	ND
Concentration, mg/dscm [a]	ND	ND	ND	ND
Concentration, ppbvd [b]	ND	ND	ND	ND
Emission Rate, lb/test period [c]	ND	ND	ND	ND
Emission Rate, lb/ton [d]	ND	ND	ND	ND
3,3'-Dimethoxybenzidine				
Molecular Weight, g/g-mole	244.28	244.28	244.28	
Target Catch, µg	ND	ND	ND	ND
Concentration, mg/dscm [a]	ND	ND	ND	ND
Concentration, ppbvd [b]	ND	ND	ND	ND
Emission Rate, lb/test period [c]	ND	ND	ND	ND
Emission Rate, lb/ton [d]	ND	ND	ND	ND

Summary of Stack Gas Parameters and Test Results
Semi-volatile Organics - SW-846 Method 0010
Silo Exhaust Duct
Asphalt Plant C - California

	S-MM5-2	S-MM5-4	S-MM5-5	Average
Dimethyl phthalate				
Molecular Weight, g/g-mole	194.19	194.19	194.19	
Target Catch, µg	ND	ND	ND	ND
Concentration, mg/dscm [a]	ND	ND	ND	ND
Concentration, ppbvd [b]	ND	ND	ND	ND
Emission Rate, lb/test period [c]	ND	ND	ND	ND
Emission Rate, lb/ton [d]	ND	ND	ND	ND
Dimethylaniline				
Molecular Weight, g/g-mole	121.18	121.18	121.18	
Target Catch, µg	ND	ND	ND	ND
Concentration, mg/dscm [a]	ND	ND	ND	ND
Concentration, ppbvd [b]	ND	ND	ND	ND
Emission Rate, lb/test period [c]	ND	ND	ND	ND
Emission Rate, lb/ton [d]	ND	ND	ND	ND
3,3'-Dimethylbenzidine				
Molecular Weight, g/g-mole	212.28	212.28	212.28	
Target Catch, µg	ND	ND	ND	ND
Concentration, mg/dscm [a]	ND	ND	ND	ND
Concentration, ppbvd [b]	ND	ND	ND	ND
Emission Rate, lb/test period [c]	ND	ND	ND	ND
Emission Rate, lb/ton [d]	ND	ND	ND	ND
2,4-Dimethylphenol				
Molecular Weight, g/g-mole	122.17	122.17	122.17	
Target Catch, µg	ND	ND	ND	ND
Concentration, mg/dscm [a]	ND	ND	ND	ND
Concentration, ppbvd [b]	ND	ND	ND	ND
Emission Rate, lb/test period [c]	ND	ND	ND	ND
Emission Rate, lb/ton [d]	ND	ND	ND	ND
4,6-Dinitro-2-methylphenol				
Molecular Weight, g/g-mole	198.13	198.13	198.13	
Target Catch, µg	ND	ND	ND	ND
Concentration, mg/dscm [a]	ND	ND	ND	ND
Concentration, ppbvd [b]	ND	ND	ND	ND
Emission Rate, lb/test period [c]	ND	ND	ND	ND
Emission Rate, lb/ton [d]	ND	ND	ND	ND

Summary of Stack Gas Parameters and Test Results
Semi-volatile Organics - SW-846 Method 0010
Silo Exhaust Duct
Asphalt Plant C - California

	S-MM5-2	S-MM5-4	S-MM5-5	Average
2,4-Dinitrophenol				
Molecular Weight, g/g-mole	184.11	184.11	184.11	
Target Catch, µg	ND	ND	ND	ND
Concentration, mg/dscm [a]	ND	ND	ND	ND
Concentration, ppbvd [b]	ND	ND	ND	ND
Emission Rate, lb/test period [c]	ND	ND	ND	ND
Emission Rate, lb/ton [d]	ND	ND	ND	ND
2,4-Dinitrotoluene				
Molecular Weight, g/g-mole	182.14	182.14	182.14	
Target Catch, µg	ND	ND	ND	ND
Concentration, mg/dscm [a]	ND	ND	ND	ND
Concentration, ppbvd [b]	ND	ND	ND	ND
Emission Rate, lb/test period [c]	ND	ND	ND	ND
Emission Rate, lb/ton [d]	ND	ND	ND	ND
2,6-Dinitrotoluene				
Molecular Weight, g/g-mole	182.14	182.14	182.14	
Target Catch, µg	ND	ND	ND	ND
Concentration, mg/dscm [a]	ND	ND	ND	ND
Concentration, ppbvd [b]	ND	ND	ND	ND
Emission Rate, lb/test period [c]	ND	ND	ND	ND
Emission Rate, lb/ton [d]	ND	ND	ND	ND
Di-n-octyl phthalate				
Molecular Weight, g/g-mole	390.56	390.56	390.56	
Target Catch, µg	ND	ND	ND	ND
Concentration, mg/dscm [a]	ND	ND	ND	ND
Concentration, ppbvd [b]	ND	ND	ND	ND
Emission Rate, lb/test period [c]	ND	ND	ND	ND
Emission Rate, lb/ton [d]	ND	ND	ND	ND
bis(2-Ethylhexyl)-phthalate				
Molecular Weight, g/g-mole	390.54	390.54	390.54	
Target Catch, µg	ND	ND	ND	ND
Concentration, mg/dscm [a]	ND	ND	ND	ND
Concentration, ppbvd [b]	ND	ND	ND	ND
Emission Rate, lb/test period [c]	ND	ND	ND	ND
Emission Rate, lb/ton [d]	ND	ND	ND	ND

Summary of Stack Gas Parameters and Test Results
Semi-volatile Organics - SW-846 Method 0010
Silo Exhaust Duct
Asphalt Plant C - California

	S-MM5-2	S-MM5-4	S-MM5-5	Average
Fluoranthene				
Molecular Weight, g/g-mole	202.26	202.26	202.26	
Target Catch, µg	ND	ND	ND	ND
Concentration, mg/dscm [a]	ND	ND	ND	ND
Concentration, ppbvd [b]	ND	ND	ND	ND
Emission Rate, lb/test period [c]	ND	ND	ND	ND
Emission Rate, lb/ton [d]	ND	ND	ND	ND
Fluorene				
Molecular Weight, g/g-mole	166.21	166.21	166.21	
Target Catch, µg	ND	ND	{560}	(187)
Concentration, mg/dscm [a]	ND	ND	{2.14E-01}	(7.14E-02)
Concentration, ppbvd [b]	ND	ND	{3.10E+01}	(1.03E+01)
Emission Rate, lb/test period [c]	ND	ND	{4.90E-04}	(1.63E-04)
Emission Rate, lb/ton [d]	ND	ND	{6.91E-07}	(2.30E-07)
Hexachlorobenzene				
Molecular Weight, g/g-mole	284.80	284.80	284.80	
Target Catch, µg	ND	ND	ND	ND
Concentration, mg/dscm [a]	ND	ND	ND	ND
Concentration, ppbvd [b]	ND	ND	ND	ND
Emission Rate, lb/test period [c]	ND	ND	ND	ND
Emission Rate, lb/ton [d]	ND	ND	ND	ND
Hexachlorobutadiene				
Molecular Weight, g/g-mole	260.76	154.21	154.21	
Target Catch, µg	ND	ND	ND	ND
Concentration, mg/dscm [a]	ND	ND	ND	ND
Concentration, ppbvd [b]	ND	ND	ND	ND
Emission Rate, lb/test period [c]	ND	ND	ND	ND
Emission Rate, lb/ton [d]	ND	ND	ND	ND
Hexachlorocyclopentadiene				
Molecular Weight, g/g-mole	272.77	272.77	272.77	
Target Catch, µg	ND	ND	ND	ND
Concentration, mg/dscm [a]	ND	ND	ND	ND
Concentration, ppbvd [b]	ND	ND	ND	ND
Emission Rate, lb/test period [c]	ND	ND	ND	ND
Emission Rate, lb/ton [d]	ND	ND	ND	ND

Summary of Stack Gas Parameters and Test Results
Semi-volatile Organics - SW-846 Method 0010
Silo Exhaust Duct
Asphalt Plant C - California

	S-MM5-2	S-MM5-4	S-MM5-5	Average
Hexachloroethane				
Molecular Weight, g/g-mole	236.74	236.74	236.74	
Target Catch, µg	ND	ND	ND	ND
Concentration, mg/dscm [a]	ND	ND	ND	ND
Concentration, ppbvd [b]	ND	ND	ND	ND
Emission Rate, lb/test period [c]	ND	ND	ND	ND
Emission Rate, lb/ton [d]	ND	ND	ND	ND
Hydroquinone				
Molecular Weight, g/g-mole	110.11	110.11	110.11	
Target Catch, µg	ND	ND	ND	ND
Concentration, mg/dscm [a]	ND	ND	ND	ND
Concentration, ppbvd [b]	ND	ND	ND	ND
Emission Rate, lb/test period [c]	ND	ND	ND	ND
Emission Rate, lb/ton [d]	ND	ND	ND	ND
Indeno(1,2,3-cd)pyrene				
Molecular Weight, g/g-mole	290.34	290.34	290.34	
Target Catch, µg	ND	ND	ND	ND
Concentration, mg/dscm [a]	ND	ND	ND	ND
Concentration, ppbvd [b]	ND	ND	ND	ND
Emission Rate, lb/test period [c]	ND	ND	ND	ND
Emission Rate, lb/ton [d]	ND	ND	ND	ND
Isophorone				
Molecular Weight, g/g-mole	138.20	138.20	138.20	
Target Catch, µg	ND	ND	ND	ND
Concentration, mg/dscm [a]	ND	ND	ND	ND
Concentration, ppbvd [b]	ND	ND	ND	ND
Emission Rate, lb/test period [c]	ND	ND	ND	ND
Emission Rate, lb/ton [d]	ND	ND	ND	ND
2-Methoxybenzenamine				
Molecular Weight, g/g-mole	123.15	123.15	123.15	
Target Catch, µg	ND	ND	ND	ND
Concentration, mg/dscm [a]	ND	ND	ND	ND
Concentration, ppbvd [b]	ND	ND	ND	ND
Emission Rate, lb/test period [c]	ND	ND	ND	ND
Emission Rate, lb/ton [d]	ND	ND	ND	ND

Summary of Stack Gas Parameters and Test Results
Semi-volatile Organics - SW-846 Method 0010
Silo Exhaust Duct
Asphalt Plant C - California

	S-MM5-2	S-MM5-4	S-MM5-5	Average
4,4'-Methyl-bis(2-chloroaniline)				
Molecular Weight, g/g-mole	267.16	267.16	267.16	
Target Catch, µg	ND	ND	ND	ND
Concentration, mg/dscm [a]	ND	ND	ND	ND
Concentration, ppbvd [b]	ND	ND	ND	ND
Emission Rate, lb/test period [c]	ND	ND	ND	ND
Emission Rate, lb/ton [d]	ND	ND	ND	ND
2-Methylnaphthalene				
Molecular Weight, g/g-mole	142.20	142.20	142.20	
Target Catch, µg	3,600	{2,300}	4,400	{3,433}
Concentration, mg/dscm [a]	1.50E+00	{1.69E+00}	1.68E+00	{1.63E+00}
Concentration, ppbvd [b]	2.54E+02	{2.87E+02}	2.85E+02	{2.75E+02}
Emission Rate, lb/test period [c]	5.00E-03	{2.94E-03}	3.85E-03	{3.93E-03}
Emission Rate, lb/ton [d]	8.30E-06	{3.33E-06}	5.43E-06	{5.69E-06}
2-Methylphenol				
Molecular Weight, g/g-mole	108.13	108.13	108.13	
Target Catch, µg	ND	ND	ND	ND
Concentration, mg/dscm [a]	ND	ND	ND	ND
Concentration, ppbvd [b]	ND	ND	ND	ND
Emission Rate, lb/test period [c]	ND	ND	ND	ND
Emission Rate, lb/ton [d]	ND	ND	ND	ND
3/4-Methylphenol				
Molecular Weight, g/g-mole	108.13	108.13	108.13	
Target Catch, µg	ND	ND	ND	ND
Concentration, mg/dscm [a]	ND	ND	ND	ND
Concentration, ppbvd [b]	ND	ND	ND	ND
Emission Rate, lb/test period [c]	ND	ND	ND	ND
Emission Rate, lb/ton [d]	ND	ND	ND	ND
Naphthalene				
Molecular Weight, g/g-mole	128.16	128.16	128.16	
Target Catch, µg	{1,600}	{1,500}	{2,600}	{1,900}
Concentration, mg/dscm [a]	{6.67E-01}	{1.10E+00}	{9.94E-01}	{9.22E-01}
Concentration, ppbvd [b]	{1.25E+02}	{2.07E+02}	{1.87E+02}	{1.73E+02}
Emission Rate, lb/test period [c]	{2.22E-03}	{1.92E-03}	{2.27E-03}	{2.14E-03}
Emission Rate, lb/ton [d]	{3.69E-06}	{2.17E-06}	{3.21E-06}	{3.02E-06}

Summary of Stack Gas Parameters and Test Results
Semi-volatile Organics - SW-846 Method 0010
Silo Exhaust Duct
Asphalt Plant C - California

	S-MM5-2	S-MM5-4	S-MM5-5	Average
2-Nitroaniline				
Molecular Weight, g/g-mole	138.12	138.12	138.12	
Target Catch, µg	ND	ND	ND	ND
Concentration, mg/dscm [a]	ND	ND	ND	ND
Concentration, ppbvd [b]	ND	ND	ND	ND
Emission Rate, lb/test period [c]	ND	ND	ND	ND
Emission Rate, lb/ton [d]	ND	ND	ND	ND
3-Nitroaniline				
Molecular Weight, g/g-mole	138.12	138.12	138.12	
Target Catch, µg	ND	ND	ND	ND
Concentration, mg/dscm [a]	ND	ND	ND	ND
Concentration, ppbvd [b]	ND	ND	ND	ND
Emission Rate, lb/test period [c]	ND	ND	ND	ND
Emission Rate, lb/ton [d]	ND	ND	ND	ND
4-Nitroaniline				
Molecular Weight, g/g-mole	138.12	138.12	138.12	
Target Catch, µg	ND	ND	ND	ND
Concentration, mg/dscm [a]	ND	ND	ND	ND
Concentration, ppbvd [b]	ND	ND	ND	ND
Emission Rate, lb/test period [c]	ND	ND	ND	ND
Emission Rate, lb/ton [d]	ND	ND	ND	ND
Nitrobenzene				
Molecular Weight, g/g-mole	123.11	123.11	123.11	
Target Catch, µg	ND	ND	ND	ND
Concentration, mg/dscm [a]	ND	ND	ND	ND
Concentration, ppbvd [b]	ND	ND	ND	ND
Emission Rate, lb/test period [c]	ND	ND	ND	ND
Emission Rate, lb/ton [d]	ND	ND	ND	ND
4-Nitrodiphenyl				
Molecular Weight, g/g-mole	199.20	199.20	199.20	
Target Catch, µg	ND	ND	ND	ND
Concentration, mg/dscm [a]	ND	ND	ND	ND
Concentration, ppbvd [b]	ND	ND	ND	ND
Emission Rate, lb/test period [c]	ND	ND	ND	ND
Emission Rate, lb/ton [d]	ND	ND	ND	ND

Summary of Stack Gas Parameters and Test Results
Semi-volatile Organics - SW-846 Method 0010
Silo Exhaust Duct
Asphalt Plant C - California

	S-MM5-2	S-MM5-4	S-MM5-5	Average
2-Nitrophenol				
Molecular Weight, g/g-mole	139.11	139.11	139.11	
Target Catch, µg	ND	ND	ND	ND
Concentration, mg/dscm [a]	ND	ND	ND	ND
Concentration, ppbvd [b]	ND	ND	ND	ND
Emission Rate, lb/test period [c]	ND	ND	ND	ND
Emission Rate, lb/ton [d]	ND	ND	ND	ND
4-Nitrophenol				
Molecular Weight, g/g-mole	139.11	139.11	139.11	
Target Catch, µg	ND	ND	ND	ND
Concentration, mg/dscm [a]	ND	ND	ND	ND
Concentration, ppbvd [b]	ND	ND	ND	ND
Emission Rate, lb/test period [c]	ND	ND	ND	ND
Emission Rate, lb/ton [d]	ND	ND	ND	ND
N-Nitrosodimethylamine				
Molecular Weight, g/g-mole	74.08	74.08	74.08	
Target Catch, µg	ND	ND	ND	ND
Concentration, mg/dscm [a]	ND	ND	ND	ND
Concentration, ppbvd [b]	ND	ND	ND	ND
Emission Rate, lb/test period [c]	ND	ND	ND	ND
Emission Rate, lb/ton [d]	ND	ND	ND	ND
N-Nitrosodiphenylamine				
Molecular Weight, g/g-mole	198.22	198.22	198.22	
Target Catch, µg	ND	ND	ND	ND
Concentration, mg/dscm [a]	ND	ND	ND	ND
Concentration, ppbvd [b]	ND	ND	ND	ND
Emission Rate, lb/test period [c]	ND	ND	ND	ND
Emission Rate, lb/ton [d]	ND	ND	ND	ND
N-Nitroso-di-n-propylamine				
Molecular Weight, g/g-mole	130.19	130.19	130.19	
Target Catch, µg	ND	ND	ND	ND
Concentration, mg/dscm [a]	ND	ND	ND	ND
Concentration, ppbvd [b]	ND	ND	ND	ND
Emission Rate, lb/test period [c]	ND	ND	ND	ND
Emission Rate, lb/ton [d]	ND	ND	ND	ND

Summary of Stack Gas Parameters and Test Results
Semi-volatile Organics - SW-846 Method 0010
Silo Exhaust Duct
Asphalt Plant C - California

	S-MM5-2	S-MM5-4	S-MM5-5	Average
N-Nitrosomorpholine				
Molecular Weight, g/g-mole	116.11	116.11	116.11	
Target Catch, µg	ND	ND	ND	ND
Concentration, mg/dscm [a]	ND	ND	ND	ND
Concentration, ppbvd [b]	ND	ND	ND	ND
Emission Rate, lb/test period [c]	ND	ND	ND	ND
Emission Rate, lb/ton [d]	ND	ND	ND	ND
2,2'-Oxybis(1-chloropropane)				
Molecular Weight, g/g-mole	171.07	171.07	171.07	
Target Catch, µg	ND	ND	ND	ND
Concentration, mg/dscm [a]	ND	ND	ND	ND
Concentration, ppbvd [b]	ND	ND	ND	ND
Emission Rate, lb/test period [c]	ND	ND	ND	ND
Emission Rate, lb/ton [d]	ND	ND	ND	ND
Pentachloronitrobenzene (PCNB)				
Molecular Weight, g/g-mole	295.30	295.30	295.30	
Target Catch, µg	ND	ND	ND	ND
Concentration, mg/dscm [a]	ND	ND	ND	ND
Concentration, ppbvd [b]	ND	ND	ND	ND
Emission Rate, lb/test period [c]	ND	ND	ND	ND
Emission Rate, lb/ton [d]	ND	ND	ND	ND
Pentachlorophenol				
Molecular Weight, g/g-mole	266.35	266.35	266.35	
Target Catch, µg	ND	ND	ND	ND
Concentration, mg/dscm [a]	ND	ND	ND	ND
Concentration, ppbvd [b]	ND	ND	ND	ND
Emission Rate, lb/test period [c]	ND	ND	ND	ND
Emission Rate, lb/ton [d]	ND	ND	ND	ND
Phenanthrene				
Molecular Weight, g/g-mole	178.22	178.22	178.22	
Target Catch, µg	{950}	{590}	{1,200}	{913}
Concentration, mg/dscm [a]	{3.96E-01}	{4.35E-01}	{4.59E-01}	{4.30E-01}
Concentration, ppbvd [b]	{5.35E+01}	{5.86E+01}	{6.19E+01}	{5.80E+01}
Emission Rate, lb/test period [c]	{1.32E-03}	{7.54E-04}	{1.05E-03}	{1.04E-03}
Emission Rate, lb/ton [d]	{2.19E-06}	{8.55E-07}	{1.48E-06}	{1.51E-06}

Summary of Stack Gas Parameters and Test Results
Semi-volatile Organics - SW-846 Method 0010
Silo Exhaust Duct
Asphalt Plant C - California

	S-MM5-2	S-MM5-4	S-MM5-5	Average
Phenol				
Molecular Weight, g/g-mole	94.11	94.11	94.11	
Target Catch, µg	ND	ND	ND	ND
Concentration, mg/dscm [a]	ND	ND	ND	ND
Concentration, ppbvd [b]	ND	ND	ND	ND
Emission Rate, lb/test period [c]	ND	ND	ND	ND
Emission Rate, lb/ton [d]	ND	ND	ND	ND
Pyrene				
Molecular Weight, g/g-mole	202.24	202.24	202.24	
Target Catch, µg	ND	ND	ND	ND
Concentration, mg/dscm [a]	ND	ND	ND	ND
Concentration, ppbvd [b]	ND	ND	ND	ND
Emission Rate, lb/test period [c]	ND	ND	ND	ND
Emission Rate, lb/ton [d]	ND	ND	ND	ND
o-Toluidine				
Molecular Weight, g/g-mole	107.15	107.15	107.15	
Target Catch, µg	ND	ND	ND	ND
Concentration, mg/dscm [a]	ND	ND	ND	ND
Concentration, ppbvd [b]	ND	ND	ND	ND
Emission Rate, lb/test period [c]	ND	ND	ND	ND
Emission Rate, lb/ton [d]	ND	ND	ND	ND
1,2,4-Trichlorobenzene				
Molecular Weight, g/g-mole	181.46	181.46	181.46	
Target Catch, µg	ND	ND	ND	ND
Concentration, mg/dscm [a]	ND	ND	ND	ND
Concentration, ppbvd [b]	ND	ND	ND	ND
Emission Rate, lb/test period [c]	ND	ND	ND	ND
Emission Rate, lb/ton [d]	ND	ND	ND	ND
2,4,5-Trichlorophenol				
Molecular Weight, g/g-mole	197.46	197.46	197.46	
Target Catch, µg	ND	ND	ND	ND
Concentration, mg/dscm [a]	ND	ND	ND	ND
Concentration, ppbvd [b]	ND	ND	ND	ND
Emission Rate, lb/test period [c]	ND	ND	ND	ND
Emission Rate, lb/ton [d]	ND	ND	ND	ND

Summary of Stack Gas Parameters and Test Results
Semi-volatile Organics - SW-846 Method 0010
Silo Exhaust Duct
Asphalt Plant C - California

	S-MM5-2	S-MM5-4	S-MM5-5	Average
2,4,6-Trichlorophenol				
Molecular Weight, g/g-mole	197.46	197.46	197.46	
Target Catch, µg	ND	ND	ND	ND
Concentration, mg/dscm [a]	ND	ND	ND	ND
Concentration, ppbvd [b]	ND	ND	ND	ND
Emission Rate, lb/test period [c]	ND	ND	ND	ND
Emission Rate, lb/ton [d]	ND	ND	ND	ND
Trifluralin				
Molecular Weight, g/g-mole	335.29	335.29	335.29	
Target Catch, µg	ND	ND	ND	ND
Concentration, mg/dscm [a]	ND	ND	ND	ND
Concentration, ppbvd [b]	ND	ND	ND	ND
Emission Rate, lb/test period [c]	ND	ND	ND	ND
Emission Rate, lb/ton [d]	ND	ND	ND	ND

[a] Milligrams per dry standard cubic meter at 68° F (20° C) and 1 atm.

[b] Parts per billion by volume.

[c] Pounds per test period.

[d] Pounds per ton of asphalt loaded.

ND Not Detectable - Results are below target analyte detection limit. Values are counted as zero (0) in averages.

{ } Estimate - Concentration exceeds calibration range.

Summary of Stack Gas Parameters and Test Results
Tentatively Identified Compounds - SW-846 Method 0010
Silo Exhaust Duct
Asphalt Plant C - California

	RUN NUMBER	S-MM5-2	S-MM5-4	S-MM5-5	
	RUN DATE	7/25/98	7/28/98	7/28/98	Average
	RUN TIME	0710-0950	0913-1323	1358-1940	
	MEASURED DATA				
γ	Meter Box Correction Factor	1.007	1.007	1.007	1.007
ΔH	Avg Meter Orifice Pressure, in. H_2O	1.83	0.611	2.28	1.58
P_{bar}	Barometric Pressure, inches Hg	29.26	29.05	29.05	29.12
V_m	Sample Volume, ft^3	88.998	52.202	98.934	80.045
T_m	Average Meter Temperature, °F	89	103	96	96
P_{static}	Stack Static Pressure, inches H_2O	-0.25	-0.25	-0.25	-0.25
T_s	Average Stack Temperature, °F	241	270	270	261
V_{lc}	Condensate Collected, ml	522.4	1133.6	1119.9	925.3
CO_2	Carbon Dioxide content, % by volum	0.0	0.0	0.0	0.0
O_2	Oxygen content, % by volume	20.9	20.9	20.9	20.9
N_2	Nitrogen content, % by volume	79.1	79.1	79.1	79.1
C_p	Pitot Tube Coefficient	0.84	0.84	0.84	0.84
$\Delta p^{1/2}$	Average Square Root Δp, (in. $H_2O)^{1/2}$	0.3481	0.2846	0.2895	0.3074
Θ	Sample Run Duration, minutes	120	120	120	120
D_n	Nozzle Diameter, inches	0.380	0.433	0.500	0.438
	Tons of Asphalt loaded per hour	602.5	881.0	709.4	731.0
	CALCULATED DATA				
A_n	Nozzle Area, ft^2	0.000788	0.001023	0.001364	0.001058
$V_{m(std)}$	Standard Meter Volume, dscf	84.662	47.947	92.325	74.978
$V_{m(std)}$	Standard Meter Volume, dscm	2.397	1.358	2.614	2.123
P_s	Stack Pressure, inches Hg	29.24	29.03	29.03	29.10
B_{ws}	Moisture, % by volume	22.5	52.7	36.3	37.2
V_{wstd}	Standard Water Vapor Volume, ft^3	24.589	53.359	52.714	43.554
$1-B_{ws}$	Dry Mole Fraction	0.775	0.473	0.637	0.628
M_d	Molecular Weight (d.b.), lb/lb•mole	28.84	28.84	28.84	28.84
M_s	Molecular Weight (w.b.), lb/lb•mole	26.40	23.13	24.90	24.81
V_s	Stack Gas Velocity, ft/s	23.8	21.3	20.9	22.0
A	Stack Area, ft^2	0.545	0.545	0.545	0.545
Q_a	Stack Gas Volumetric flow, acfm	780	698	684	720
Q_s	Stack Gas Volumetric flow, dscfm	445	232	305	327
$Q_{s(cmm)}$	Stack Gas Volumetric flow, dscmm	12.6	6.56	8.64	9.26
I	Isokinetic Sampling Ratio, %	109.9	92.1	100.8	100.9

Summary of Stack Gas Parameters and Test Results
Tentatively Identified Compounds - SW-846 Method 0010
Silo Exhaust Duct
Asphalt Plant C - California

RUN NUMBER	S-MM5-2
Unknown alkane	
Target Catch, µg	7,900
Concentration, mg/dscm [a]	3.29
Emission Rate, lb/test period [b]	1.10E-02
Emission Rate, lb/ton [c]	1.82E-05
Unknown	
Target Catch, µg	13,000
Concentration, mg/dscm [a]	5.42
Emission Rate, lb/test period [b]	1.81E-02
Emission Rate, lb/ton [c]	3.00E-05
Unknown PAH	
Target Catch, µg	15,000
Concentration, mg/dscm [a]	6.26
Emission Rate, lb/test period [b]	2.08E-02
Emission Rate, lb/ton [c]	3.46E-05
Unknown alkene	
Target Catch, µg	8,900
Concentration, mg/dscm [a]	3.71
Emission Rate, lb/test period [b]	1.24E-02
Emission Rate, lb/ton [c]	2.05E-05
Undecane	
Target Catch, µg	8,600
Concentration, mg/dscm [a]	3.59
Emission Rate, lb/test period [b]	1.19E-02
Emission Rate, lb/ton [c]	1.98E-05
Unknown	
Target Catch, µg	8,400
Concentration, mg/dscm [a]	3.50
Emission Rate, lb/test period [b]	1.17E-02
Emission Rate, lb/ton [c]	1.94E-05
Dodecane, 2,6,10-trimethyl-	
Target Catch, µg	17,000
Concentration, mg/dscm [a]	7.09
Emission Rate, lb/test period [b]	2.36E-02
Emission Rate, lb/ton [c]	3.92E-05

Summary of Stack Gas Parameters and Test Results
Tentatively Identified Compounds - SW-846 Method 0010
Silo Exhaust Duct
Asphalt Plant C - California

RUN NUMBER	S-MM5-2
Tetradecane	
Target Catch, µg	22,000
Concentration, mg/dscm [a]	9.18
Emission Rate, lb/test period [b]	3.06E-02
Emission Rate, lb/ton [c]	5.07E-05
Unknown alkene	
Target Catch, µg	12,000
Concentration, mg/dscm [a]	5.00
Emission Rate, lb/test period [b]	1.67E-02
Emission Rate, lb/ton [c]	2.77E-05
Heptadecane, 2,6,10,14-tetramethyl-	
Target Catch, µg	18,000
Concentration, mg/dscm [a]	7.51
Emission Rate, lb/test period [b]	2.50E-02
Emission Rate, lb/ton [c]	4.15E-05
Undecane, 2-methyl-	
Target Catch, µg	19,000
Concentration, mg/dscm [a]	7.92
Emission Rate, lb/test period [b]	2.64E-02
Emission Rate, lb/ton [c]	4.38E-05
Unknown alkane	
Target Catch, µg	13,000
Concentration, mg/dscm [a]	5.42
Emission Rate, lb/test period [b]	1.81E-02
Emission Rate, lb/ton [c]	3.00E-05
Nonadecane	
Target Catch, µg	24,000
Concentration, mg/dscm [a]	10.0
Emission Rate, lb/test period [b]	3.33E-02
Emission Rate, lb/ton [c]	5.53E-05
Heptadecane, 2,6,-dimethyl-	
Target Catch, µg	15,000
Concentration, mg/dscm [a]	6.26
Emission Rate, lb/test period [b]	2.08E-02
Emission Rate, lb/ton [c]	3.46E-05

Summary of Stack Gas Parameters and Test Results
Tentatively Identified Compounds - SW-846 Method 0010
Silo Exhaust Duct
Asphalt Plant C - California

RUN NUMBER	S-MM5-2
Heptadecane, 2,6,-dimethyl-	
Target Catch, µg	32,000
Concentration, mg/dscm [a]	13.3
Emission Rate, lb/test period [b]	4.45E-02
Emission Rate, lb/ton [c]	7.38E-05
Heptadecane, 2,6,-dimethyl-	
Target Catch, µg	10,000
Concentration, mg/dscm [a]	4.17
Emission Rate, lb/test period [b]	1.39E-02
Emission Rate, lb/ton [c]	2.31E-05
Heptadecane, 2,6,-dimethyl-	
Target Catch, µg	14,000
Concentration, mg/dscm [a]	5.84
Emission Rate, lb/test period [b]	1.95E-02
Emission Rate, lb/ton [c]	3.23E-05
Nonadecane	
Target Catch, µg	7,700
Concentration, mg/dscm [a]	3.21
Emission Rate, lb/test period [b]	1.07E-02
Emission Rate, lb/ton [c]	1.78E-05
Heptadecane, 2,6,10,14-tetramethyl-	
Target Catch, µg	9,700
Concentration, mg/dscm [a]	4.05
Emission Rate, lb/test period [b]	1.35E-02
Emission Rate, lb/ton [c]	2.24E-05
Nonadecane	
Target Catch, µg	7,500
Concentration, mg/dscm [a]	3.13
Emission Rate, lb/test period [b]	1.04E-02
Emission Rate, lb/ton [c]	1.73E-05

Summary of Stack Gas Parameters and Test Results
Tentatively Identified Compounds - SW-846 Method 0010
Silo Exhaust Duct
Asphalt Plant C - California

RUN NUMBER	S-MM5-4
Undecane	
Target Catch, µg	7,600
Concentration, mg/dscm [a]	5.60
Emission Rate, lb/test period [b]	9.71E-03
Emission Rate, lb/ton [c]	1.10E-05
Unknown	
Target Catch, µg	7,500
Concentration, mg/dscm [a]	5.52
Emission Rate, lb/test period [b]	9.58E-03
Emission Rate, lb/ton [c]	1.09E-05
Unknown alkane	
Target Catch, µg	7,100
Concentration, mg/dscm [a]	5.23
Emission Rate, lb/test period [b]	9.07E-03
Emission Rate, lb/ton [c]	1.03E-05
Decane, 2,5,9-Trimethyl-	
Target Catch, µg	6,200
Concentration, mg/dscm [a]	4.57
Emission Rate, lb/test period [b]	7.92E-03
Emission Rate, lb/ton [c]	8.99E-06
Unknown	
Target Catch, µg	12,000
Concentration, mg/dscm [a]	8.84
Emission Rate, lb/test period [b]	1.53E-02
Emission Rate, lb/ton [c]	1.74E-05
Unknown alkane	
Target Catch, µg	12,000
Concentration, mg/dscm [a]	8.84
Emission Rate, lb/test period [b]	1.53E-02
Emission Rate, lb/ton [c]	1.74E-05
Unknown hydrocarbon	
Target Catch, µg	6,900
Concentration, mg/dscm [a]	5.08
Emission Rate, lb/test period [b]	8.81E-03
Emission Rate, lb/ton [c]	1.00E-05

Summary of Stack Gas Parameters and Test Results
Tentatively Identified Compounds - SW-846 Method 0010
Silo Exhaust Duct
Asphalt Plant C - California

RUN NUMBER	S-MM5-4
Octane, 3,5-dimethyl-	
Target Catch, µg	9,800
Concentration, mg/dscm [a]	7.22
Emission Rate, lb/test period [b]	1.25E-02
Emission Rate, lb/ton [c]	1.42E-05
Unknown	
Target Catch, µg	6,400
Concentration, mg/dscm [a]	4.71
Emission Rate, lb/test period [b]	8.18E-03
Emission Rate, lb/ton [c]	9.28E-06
Heptadecane, 2,6-dimethyl-	
Target Catch, µg	13,000
Concentration, mg/dscm [a]	9.57
Emission Rate, lb/test period [b]	1.66E-02
Emission Rate, lb/ton [c]	1.88E-05
Tetradecane	
Target Catch, µg	18,000
Concentration, mg/dscm [a]	13.3
Emission Rate, lb/test period [b]	2.30E-02
Emission Rate, lb/ton [c]	2.61E-05
Unknown	
Target Catch, µg	8,600
Concentration, mg/dscm [a]	6.33
Emission Rate, lb/test period [b]	1.10E-02
Emission Rate, lb/ton [c]	1.25E-05
Heptadecane, 2,6,10,14 -tetramethyl-	
Target Catch, µg	12,000
Concentration, mg/dscm [a]	8.84
Emission Rate, lb/test period [b]	1.53E-02
Emission Rate, lb/ton [c]	1.74E-05
Pentadecane	
Target Catch, µg	14,000
Concentration, mg/dscm [a]	10.3
Emission Rate, lb/test period [b]	1.79E-02
Emission Rate, lb/ton [c]	2.03E-05

Summary of Stack Gas Parameters and Test Results
Tentatively Identified Compounds - SW-846 Method 0010
Silo Exhaust Duct
Asphalt Plant C - California

RUN NUMBER	S-MM5-4
Unknown	
Target Catch, µg	6,400
Concentration, mg/dscm [a]	4.71
Emission Rate, lb/test period [b]	8.18E-03
Emission Rate, lb/ton [c]	9.28E-06
Nonadecane	
Target Catch, µg	16,000
Concentration, mg/dscm [a]	11.8
Emission Rate, lb/test period [b]	2.04E-02
Emission Rate, lb/ton [c]	2.32E-05
Undecane, 2,6-dimethyl-	
Target Catch, µg	13,000
Concentration, mg/dscm [a]	9.57
Emission Rate, lb/test period [b]	1.66E-02
Emission Rate, lb/ton [c]	1.88E-05
Heptadecane, 2,6-dimethyl-	
Target Catch, µg	28,000
Concentration, mg/dscm [a]	20.6
Emission Rate, lb/test period [b]	3.58E-02
Emission Rate, lb/ton [c]	4.06E-05
Unknown alkane	
Target Catch, µg	7,600
Concentration, mg/dscm [a]	5.60
Emission Rate, lb/test period [b]	9.71E-03
Emission Rate, lb/ton [c]	1.10E-05
Heptadecane, 2,6-dimethyl-	
Target Catch, µg	9,800
Concentration, mg/dscm [a]	7.22
Emission Rate, lb/test period [b]	1.25E-02
Emission Rate, lb/ton [c]	1.42E-05

Summary of Stack Gas Parameters and Test Results
Tentatively Identified Compounds - SW-846 Method 0010
Silo Exhaust Duct
Asphalt Plant C - California

RUN NUMBER	S-MM5-5
Unknown	
Target Catch, µg	11,000
Concentration, mg/dscm [a]	4.21
Emission Rate, lb/test period [b]	9.62E-03
Emission Rate, lb/ton [c]	1.36E-05
Unknown	
Target Catch, µg	13,000
Concentration, mg/dscm [a]	4.97
Emission Rate, lb/test period [b]	1.14E-02
Emission Rate, lb/ton [c]	1.60E-05
Decane, 2,9-dimethyl-	
Target Catch, µg	9,200
Concentration, mg/dscm [a]	3.52
Emission Rate, lb/test period [b]	8.05E-03
Emission Rate, lb/ton [c]	1.13E-05
Undecane, 2,6-dimethyl-	
Target Catch, µg	9,500
Concentration, mg/dscm [a]	3.63
Emission Rate, lb/test period [b]	8.31E-03
Emission Rate, lb/ton [c]	1.17E-05
Unknown	
Target Catch, µg	15,000
Concentration, mg/dscm [a]	5.74
Emission Rate, lb/test period [b]	1.31E-02
Emission Rate, lb/ton [c]	1.85E-05
Unknown alkane	
Target Catch, µg	20,000
Concentration, mg/dscm [a]	7.65
Emission Rate, lb/test period [b]	1.75E-02
Emission Rate, lb/ton [c]	2.47E-05
Unknown	
Target Catch, µg	12,000
Concentration, mg/dscm [a]	4.59
Emission Rate, lb/test period [b]	1.05E-02
Emission Rate, lb/ton [c]	1.48E-05

Summary of Stack Gas Parameters and Test Results
Tentatively Identified Compounds - SW-846 Method 0010
Silo Exhaust Duct
Asphalt Plant C - California

RUN NUMBER	S-MM5-5
Unknown alkane	
Target Catch, µg	11,000
Concentration, mg/dscm [a]	4.21
Emission Rate, lb/test period [b]	9.62E-03
Emission Rate, lb/ton [c]	1.36E-05
Unknown	
Target Catch, µg	10,000
Concentration, mg/dscm [a]	3.82
Emission Rate, lb/test period [b]	8.75E-03
Emission Rate, lb/ton [c]	1.23E-05
Unknown	
Target Catch, µg	12,000
Concentration, mg/dscm [a]	4.59
Emission Rate, lb/test period [b]	1.05E-02
Emission Rate, lb/ton [c]	1.48E-05
Dodecane, 2,6,10-trimethyl-	
Target Catch, µg	19,000
Concentration, mg/dscm [a]	7.27
Emission Rate, lb/test period [b]	1.66E-02
Emission Rate, lb/ton [c]	2.34E-05
Tetradecane	
Target Catch, µg	25,000
Concentration, mg/dscm [a]	9.56
Emission Rate, lb/test period [b]	2.19E-02
Emission Rate, lb/ton [c]	3.08E-05
Unknown	
Target Catch, µg	15,000
Concentration, mg/dscm [a]	5.74
Emission Rate, lb/test period [b]	1.31E-02
Emission Rate, lb/ton [c]	1.85E-05
Heptadecane, 2,6,10,14 -tetramethyl-	
Target Catch, µg	22,000
Concentration, mg/dscm [a]	8.41
Emission Rate, lb/test period [b]	1.92E-02
Emission Rate, lb/ton [c]	2.71E-05

Summary of Stack Gas Parameters and Test Results
Tentatively Identified Compounds - SW-846 Method 0010
Silo Exhaust Duct
Asphalt Plant C - California

RUN NUMBER	S-MM5-5
Dodecane, 3-methyl-	
Target Catch, µg	25,000
Concentration, mg/dscm [a]	9.56
Emission Rate, lb/test period [b]	2.19E-02
Emission Rate, lb/ton [c]	3.08E-05
Oxirane, hexadecyl-	
Target Catch, µg	13,000
Concentration, mg/dscm [a]	4.97
Emission Rate, lb/test period [b]	1.14E-02
Emission Rate, lb/ton [c]	1.60E-05
Unknown alkane	
Target Catch, µg	27,000
Concentration, mg/dscm [a]	10.3
Emission Rate, lb/test period [b]	2.36E-02
Emission Rate, lb/ton [c]	3.33E-05
Unknown alkane	
Target Catch, µg	14,000
Concentration, mg/dscm [a]	5.35
Emission Rate, lb/test period [b]	1.22E-02
Emission Rate, lb/ton [c]	1.73E-05
Heptadecane, 2,6-dimethyl-	
Target Catch, µg	28,000
Concentration, mg/dscm [a]	10.7
Emission Rate, lb/test period [b]	2.45E-02
Emission Rate, lb/ton [c]	3.45E-05
Nonadecane	
Target Catch, µg	11,000
Concentration, mg/dscm [a]	4.21
Emission Rate, lb/test period [b]	9.62E-03
Emission Rate, lb/ton [c]	1.36E-05

[a] Milligrams per dry standard cubic meter at 68° F (20° C) and 1 atm.

[b] Pounds per test period.

[c] Pounds per ton of asphalt loaded.

Summary of Stack Gas Parameters and Test Results
Volatile Organics - SW-846 Method 0030
Silo Exhaust Duct
Asphalt Plant C - California

	Run Number	S-V-1-1	S-V-1-2	S-V-1-4	Total
	Run Date	7/24/98	7/24/98	7/24/98	
	Run Time	0726-0736	0859-0909	1004-1014	
	Net Run Time, minutes	10.0	10.0	10.0	30.0
P_{bar}	Barometric Pressure, inches Hg	29.28	29.28	29.28	
γ	Dry Gas Meter calibration factor	1.0309	1.0309	1.0309	
V_m	Sample Volume, liters	1.980	2.120	1.750	
T_m	Avg. Meter temperature, °R	529	540	539	
ΔH	Pressure diff. of meter, in. H_2O	1.0	1.0	1.0	
$V_{m(std)}$	Sample Volume, dry std. liters	2.001	2.098	1.735	5.834
Q_s	Volumetric Flow Rate, dscfm	503	503	503	503
	Tons of asphalt per test period	79.2	57.7	56.6	193.5
Acetone					
	Molecular Weight, g/g-mole	58.08	58.08	58.08	58.08
	Target Catch, µg	0.670	{0.660}	{0.355}	{1.685}
	Concentration, mg/dscm				{0.289}
	Concentration, ppbvd				{120}
	Emission Rate, lb/test period				{2.72E-04}
	Emission Rate, lb/ton				{1.41E-06}
Acrylonitrile					
	Molecular Weight, g/g-mole	53.06	53.06	53.06	53.06
	Target Catch, µg	ND	ND	ND	ND
	Concentration, mg/dscm				ND
	Concentration, ppbvd				ND
	Emission Rate, lb/test period				ND
	Emission Rate, lb/ton				ND
Allyl chloride					
	Molecular Weight, g/g-mole	76.53	76.53	76.53	76.53
	Target Catch, µg	ND	ND	ND	ND
	Concentration, mg/dscm				ND
	Concentration, ppbvd				ND
	Emission Rate, lb/test period				ND
	Emission Rate, lb/ton				ND

Summary of Stack Gas Parameters and Test Results
Volatile Organics - SW-846 Method 0030
Silo Exhaust Duct
Asphalt Plant C - California

Run Number	S-V-1-1	S-V-1-2	S-V-1-4	Total
Benzene				
Molecular Weight, g/g-mole	78.11	78.11	78.11	78.11
Target Catch, µg	{1.206}	{0.771}	{1.054}	{3.031}
Concentration, mg/dscm				{0.519}
Concentration, ppbvd				{160}
Emission Rate, lb/test period				{4.89E-04}
Emission Rate, lb/ton				{2.53E-06}
Bromodichloromethane				
Molecular Weight, g/g-mole	163.82	163.82	163.82	163.82
Target Catch, µg	ND	ND	ND	ND
Concentration, mg/dscm				ND
Concentration, ppbvd				ND
Emission Rate, lb/test period				ND
Emission Rate, lb/ton				ND
Bromoform				
Molecular Weight, g/g-mole	252.77	252.77	252.77	252.77
Target Catch, µg	ND	ND	ND	ND
Concentration, mg/dscm				ND
Concentration, ppbvd				ND
Emission Rate, lb/test period				ND
Emission Rate, lb/ton				ND
Bromomethane				
Molecular Weight, g/g-mole	94.95	94.95	94.95	94.95
Target Catch, µg	0.116	{0.124}	{0.064}	{0.304}
Concentration, mg/dscm				{0.0521}
Concentration, ppbvd				{13.2}
Emission Rate, lb/test period				{4.91E-05}
Emission Rate, lb/ton				{2.54E-07}
1,3-Butadiene				
Molecular Weight, g/g-mole	58.08	58.08	58.08	58.08
Target Catch, µg	ND	ND	ND	ND
Concentration, mg/dscm				ND
Concentration, ppbvd				ND
Emission Rate, lb/test period				ND
Emission Rate, lb/ton				ND

Summary of Stack Gas Parameters and Test Results
Volatile Organics - SW-846 Method 0030
Silo Exhaust Duct
Asphalt Plant C - California

Run Number	S-V-1-1	S-V-1-2	S-V-1-4	Total
2-Butanone				
Molecular Weight, g/g-mole	72.10	72.10	72.10	72.10
Target Catch, µg	ND	ND	ND	ND
Concentration, mg/dscm				ND
Concentration, ppbvd				ND
Emission Rate, lb/test period				ND
Emission Rate, lb/ton				ND
Carbon disulfide				
Molecular Weight, g/g-mole	76.14	76.14	76.14	76.14
Target Catch, µg	ND	ND	ND	ND
Concentration, mg/dscm				ND
Concentration, ppbvd				ND
Emission Rate, lb/test period				ND
Emission Rate, lb/ton				ND
Carbon tetrachloride				
Molecular Weight, g/g-mole	153.84	153.84	153.84	153.84
Target Catch, µg	ND	ND	ND	ND
Concentration, mg/dscm				ND
Concentration, ppbvd				ND
Emission Rate, lb/test period				ND
Emission Rate, lb/ton				ND
Chlorobenzene				
Molecular Weight, g/g-mole	112.56	112.56	112.56	112.56
Target Catch, µg	ND	ND	ND	ND
Concentration, mg/dscm				ND
Concentration, ppbvd				ND
Emission Rate, lb/test period				ND
Emission Rate, lb/ton				ND
Chloroethane				
Molecular Weight, g/g-mole	64.52	64.52	64.52	64.52
Target Catch, µg	ND	ND	ND	ND
Concentration, mg/dscm				ND
Concentration, ppbvd				ND
Emission Rate, lb/test period				ND
Emission Rate, lb/ton				ND

Summary of Stack Gas Parameters and Test Results
Volatile Organics - SW-846 Method 0030
Silo Exhaust Duct
Asphalt Plant C - California

Run Number	S-V-1-1	S-V-1-2	S-V-1-4	Total
Chloroform				
Molecular Weight, g/g-mole	119.39	119.39	119.39	119.39
Target Catch, µg	ND	ND	ND	ND
Concentration, mg/dscm				ND
Concentration, ppbvd				ND
Emission Rate, lb/test period				ND
Emission Rate, lb/ton				ND
Chloromethane				
Molecular Weight, g/g-mole	50.49	50.49	50.49	50.49
Target Catch, µg	0.363	0.459	0.255	1.077
Concentration, mg/dscm				0.185
Concentration, ppbvd				88.0
Emission Rate, lb/test period				1.74E-04
Emission Rate, lb/ton				8.99E-07
Cumene				
Molecular Weight, g/g-mole	120.19	120.19	120.19	120.19
Target Catch, µg	ND	ND	ND	ND
Concentration, mg/dscm				ND
Concentration, ppbvd				ND
Emission Rate, lb/test period				ND
Emission Rate, lb/ton				ND
Dibromochloromethane				
Molecular Weight, g/g-mole	208.27	208.27	208.27	208.27
Target Catch, µg	ND	ND	ND	ND
Concentration, mg/dscm				ND
Concentration, ppbvd				ND
Emission Rate, lb/test period				ND
Emission Rate, lb/ton				ND
1,2-Dibromoethane				
Molecular Weight, g/g-mole	187.88	187.88	187.88	187.88
Target Catch, µg	ND	ND	ND	ND
Concentration, mg/dscm				ND
Concentration, ppbvd				ND
Emission Rate, lb/test period				ND
Emission Rate, lb/ton				ND

Summary of Stack Gas Parameters and Test Results
Volatile Organics - SW-846 Method 0030
Silo Exhaust Duct
Asphalt Plant C - California

Run Number	S-V-1-1	S-V-1-2	S-V-1-4	Total
1,1-Dichloroethane				
Molecular Weight, g/g-mole	98.97	98.97	98.97	98.97
Target Catch, µg	ND	ND	ND	ND
Concentration, mg/dscm				ND
Concentration, ppbvd				ND
Emission Rate, lb/test period				ND
Emission Rate, lb/ton				ND
1,2-Dichloroethane				
Molecular Weight, g/g-mole	98.96	98.96	98.96	98.96
Target Catch, µg	ND	ND	ND	ND
Concentration, mg/dscm				ND
Concentration, ppbvd				ND
Emission Rate, lb/test period				ND
Emission Rate, lb/ton				ND
1,1-Dichloroethene				
Molecular Weight, g/g-mole	96.95	96.95	96.95	96.95
Target Catch, µg	ND	ND	ND	ND
Concentration, mg/dscm				ND
Concentration, ppbvd				ND
Emission Rate, lb/test period				ND
Emission Rate, lb/ton				ND
cis-1,2-Dichloroethene				
Molecular Weight, g/g-mole	96.95	96.95	96.95	96.95
Target Catch, µg	ND	ND	ND	ND
Concentration, mg/dscm				ND
Concentration, ppbvd				ND
Emission Rate, lb/test period				ND
Emission Rate, lb/ton				ND
trans-1,2-Dichloroethene				
Molecular Weight, g/g-mole	96.95	96.95	96.95	96.95
Target Catch, µg	ND	ND	ND	ND
Concentration, mg/dscm				ND
Concentration, ppbvd				ND
Emission Rate, lb/test period				ND
Emission Rate, lb/ton				ND

Summary of Stack Gas Parameters and Test Results
Volatile Organics - SW-846 Method 0030
Silo Exhaust Duct
Asphalt Plant C - California

Run Number	S-V-1-1	S-V-1-2	S-V-1-4	Total
1,2-Dichloropropane				
Molecular Weight, g/g-mole	112.99	112.99	112.99	112.99
Target Catch, µg	ND	ND	ND	ND
Concentration, mg/dscm				ND
Concentration, ppbvd				ND
Emission Rate, lb/test period				ND
Emission Rate, lb/ton				ND
cis-1,3-Dichloropropene				
Molecular Weight, g/g-mole	110.98	110.98	110.98	110.98
Target Catch, µg	ND	ND	ND	ND
Concentration, mg/dscm				ND
Concentration, ppbvd				ND
Emission Rate, lb/test period				ND
Emission Rate, lb/ton				ND
trans-1,3-Dichloropropene				
Molecular Weight, g/g-mole	110.98	110.98	110.98	110.98
Target Catch, µg	ND	ND	ND	ND
Concentration, mg/dscm				ND
Concentration, ppbvd				ND
Emission Rate, lb/test period				ND
Emission Rate, lb/ton				ND
1,2-Epoxybutane				
Molecular Weight, g/g-mole	72.12	72.12	72.12	72.12
Target Catch, µg	ND	ND	ND	ND
Concentration, mg/dscm				ND
Concentration, ppbvd				ND
Emission Rate, lb/test period				ND
Emission Rate, lb/ton				ND
Ethyl acrylate				
Molecular Weight, g/g-mole	100.11	100.11	100.11	100.11
Target Catch, µg	ND	ND	ND	ND
Concentration, mg/dscm				ND
Concentration, ppbvd				ND
Emission Rate, lb/test period				ND
Emission Rate, lb/ton				ND

Summary of Stack Gas Parameters and Test Results
Volatile Organics - SW-846 Method 0030
Silo Exhaust Duct
Asphalt Plant C - California

Run Number	S-V-1-1	S-V-1-2	S-V-1-4	Total
Ethylbenzene				
Molecular Weight, g/g-mole	106.16	106.16	106.16	106.16
Target Catch, µg	{1.752}	{1.292}	0.808	{3.852}
Concentration, mg/dscm				{0.660}
Concentration, ppbvd				{150}
Emission Rate, lb/test period				{6.22E-04}
Emission Rate, lb/ton				{3.21E-06}
n-Hexane				
Molecular Weight, g/g-mole	86.17	86.17	86.17	86.17
Target Catch, µg	{7.610}	{3.321}	{2.662}	{13.593}
Concentration, mg/dscm				{2.33}
Concentration, ppbvd				{650}
Emission Rate, lb/test period				{2.20E-03}
Emission Rate, lb/ton				{1.13E-05}
2-Hexanone				
Molecular Weight, g/g-mole	100.16	100.16	100.16	100.16
Target Catch, µg	ND	ND	ND	ND
Concentration, mg/dscm				ND
Concentration, ppbvd				ND
Emission Rate, lb/test period				ND
Emission Rate, lb/ton				ND
Iodomethane				
Molecular Weight, g/g-mole	141.95	141.95	141.95	141.95
Target Catch, µg	ND	ND	ND	ND
Concentration, mg/dscm				ND
Concentration, ppbvd				ND
Emission Rate, lb/test period				ND
Emission Rate, lb/ton				ND
Isooctane				
Molecular Weight, g/g-mole	114.22	114.22	114.22	114.22
Target Catch, µg	ND	ND	{0.085}	(0.085)
Concentration, mg/dscm				(0.0146)
Concentration, ppbvd				(3.07)
Emission Rate, lb/test period				(1.37E-05)
Emission Rate, lb/ton				(7.09E-08)

Summary of Stack Gas Parameters and Test Results
Volatile Organics - SW-846 Method 0030
Silo Exhaust Duct
Asphalt Plant C - California

Run Number	S-V-1-1	S-V-1-2	S-V-1-4	Total
Methyl methacrylate				
Molecular Weight, g/g-mole	86.09	86.09	86.09	86.09
Target Catch, µg	ND	ND	ND	ND
Concentration, mg/dscm				ND
Concentration, ppbvd				ND
Emission Rate, lb/test period				ND
Emission Rate, lb/ton				ND
Methylene chloride				
Molecular Weight, g/g-mole	84.94	84.94	84.94	84.94
Target Catch, µg	ND	{0.004}	{0.002}	(0.006)
Concentration, mg/dscm				(1.03E-03)
Concentration, ppbvd				(0.291)
Emission Rate, lb/test period				(9.69E-07)
Emission Rate, lb/ton				(5.01E-09)
4-Methyl-2-pentanone				
Molecular Weight, g/g-mole	100.16	100.16	100.16	100.16
Target Catch, µg	ND	ND	ND	ND
Concentration, mg/dscm				ND
Concentration, ppbvd				ND
Emission Rate, lb/test period				ND
Emission Rate, lb/ton				ND
MTBE				
Molecular Weight, g/g-mole	88.15	88.15	88.15	88.15
Target Catch, µg	no data	no data	no data	NA
Concentration, mg/dscm				NA
Concentration, ppbvd				NA
Emission Rate, lb/test period				NA
Emission Rate, lb/ton				NA
Styrene				
Molecular Weight, g/g-mole	104.14	104.14	104.14	104.14
Target Catch, µg	ND	{0.002}	{0.001}	(0.003)
Concentration, mg/dscm				(5.14E-04)
Concentration, ppbvd				(0.119)
Emission Rate, lb/test period				(4.84E-07)
Emission Rate, lb/ton				(2.50E-09)

Summary of Stack Gas Parameters and Test Results
Volatile Organics - SW-846 Method 0030
Silo Exhaust Duct
Asphalt Plant C - California

Run Number	S-V-1-1	S-V-1-2	S-V-1-4	Total
1,1,2,2-Tetrachloroethane				
Molecular Weight, g/g-mole	167.86	167.86	167.86	167.86
Target Catch, µg	ND	ND	ND	ND
Concentration, mg/dscm				ND
Concentration, ppbvd				ND
Emission Rate, lb/test period				ND
Emission Rate, lb/ton				ND
Tetrachloroethene				
Molecular Weight, g/g-mole	165.85	165.85	165.85	165.85
Target Catch, µg	ND	ND	ND	ND
Concentration, mg/dscm				ND
Concentration, ppbvd				ND
Emission Rate, lb/test period				ND
Emission Rate, lb/ton				ND
Toluene				
Molecular Weight, g/g-mole	92.13	92.13	92.13	92.13
Target Catch, µg	{3.278}	{2.015}	{1.380}	{6.673}
Concentration, mg/dscm				{1.14}
Concentration, ppbvd				{299}
Emission Rate, lb/test period				{1.08E-03}
Emission Rate, lb/ton				{5.57E-06}
1,1,1-Trichloroethane				
Molecular Weight, g/g-mole	133.42	133.42	133.42	133.42
Target Catch, µg	ND	ND	ND	ND
Concentration, mg/dscm				ND
Concentration, ppbvd				ND
Emission Rate, lb/test period				ND
Emission Rate, lb/ton				ND
1,1,2-Trichloroethane				
Molecular Weight, g/g-mole	133.42	133.42	133.42	133.42
Target Catch, µg	ND	ND	ND	ND
Concentration, mg/dscm				ND
Concentration, ppbvd				ND
Emission Rate, lb/test period				ND
Emission Rate, lb/ton				ND

Summary of Stack Gas Parameters and Test Results
Volatile Organics - SW-846 Method 0030
Silo Exhaust Duct
Asphalt Plant C - California

Run Number	S-V-1-1	S-V-1-2	S-V-1-4	Total
Trichloroethene				
Molecular Weight, g/g-mole	131.40	131.40	131.40	131.40
Target Catch, µg	ND	ND	ND	ND
Concentration, mg/dscm				ND
Concentration, ppbvd				ND
Emission Rate, lb/test period				ND
Emission Rate, lb/ton				ND
Trichlorofluoromethane				
Molecular Weight, g/g-mole	137.38	137.38	137.38	137.38
Target Catch, µg	ND	ND	ND	ND
Concentration, mg/dscm				ND
Concentration, ppbvd				ND
Emission Rate, lb/test period				ND
Emission Rate, lb/ton				ND
Vinyl acetate				
Molecular Weight, g/g-mole	86.09	86.09	86.09	86.09
Target Catch, µg	ND	ND	ND	ND
Concentration, mg/dscm				ND
Concentration, ppbvd				ND
Emission Rate, lb/test period				ND
Emission Rate, lb/ton				ND
Vinyl bromide				
Molecular Weight, g/g-mole	106.96	106.96	106.96	106.96
Target Catch, µg	ND	ND	ND	ND
Concentration, mg/dscm				ND
Concentration, ppbvd				ND
Emission Rate, lb/test period				ND
Emission Rate, lb/ton				ND
Vinyl chloride				
Molecular Weight, g/g-mole	62.50	62.50	62.50	62.50
Target Catch, µg	ND	ND	ND	ND
Concentration, mg/dscm				ND
Concentration, ppbvd				ND
Emission Rate, lb/test period				ND
Emission Rate, lb/ton				ND

Summary of Stack Gas Parameters and Test Results
Volatile Organics - SW-846 Method 0030
Silo Exhaust Duct
Asphalt Plant C - California

Run Number	S-V-1-1	S-V-1-2	S-V-1-4	Total
m-/p-Xylene				
Molecular Weight, g/g-mole	106.16	106.16	106.16	106.16
Target Catch, µg	{10.364}	{7.040}	{4.068}	{21.472}
Concentration, mg/dscm				{3.68}
Concentration, ppbvd				{834}
Emission Rate, lb/test period				{3.47E-03}
Emission Rate, lb/ton				{1.79E-05}
o-Xylene				
Molecular Weight, g/g-mole	106.16	106.16	106.16	106.16
Target Catch, µg	{2.951}	{2.084}	{1.203}	{6.238}
Concentration, mg/dscm				{1.07}
Concentration, ppbvd				{242}
Emission Rate, lb/test period				{1.01E-03}
Emission Rate, lb/ton				{5.21E-06}

ND indicates compound was not detected. A zero was used in the total and the value enclosed in parentheses ().
Estimated values and totals using estimated values are enclosed in brackets {}.

SW-846 Method 0030 Catch Weights in Micrograms, Test Run S-V-1, Test Set 2
Samples: S-V-1-2A (Tenax tube) and S-V-1-2B (Tenax/charocal tube)

	Sample ID					
	S-V-1-2A		S-V-1-2B			TOTAL
Target Compound	**Flag***	**catch, µg**	**Flag***	**catch, µg**	**Flag***	**catch, µg**
Acetone	B	0.653	BJ	0.007	BJ	0.660
Acrylonitrile		ND		ND		ND
Allyl chloride		ND		ND		ND
Benzene	B	0.728	BJ	0.043	BJ	0.771
Bromodichloromethane		ND		ND		ND
Bromoform		ND		ND		ND
Bromomethane	BJ	0.033	B	0.091	BJ	0.124
1,3-Butadiene		ND		ND		ND
2-Butanone		ND		ND		ND
Carbon disulfide		ND		ND		ND
Carbon tetrachloride		ND		ND		ND
Chlorobenzene		ND		ND		ND
Chloroethane		ND		ND		ND
Chloroform		ND		ND		ND
Chloromethane	B	0.160	B	0.299	B	0.459
Cumene		ND		ND		ND
Dibromochloromethane		ND		ND		ND
1,2-Dibromoethane		ND		ND		ND
1,1-Dichloroethane		ND		ND		ND
1,2-Dichloroethane		ND		ND		ND
1,1-Dichloroethene		ND		ND		ND
cis-1,2-Dichloroethene		ND		ND		ND
trans-1,2-Dichloroethene		ND		ND		ND
1,2-Dichloropropane		ND		ND		ND
cis-1,3-Dichloropropene		ND		ND		ND
trans-1,3-Dichloropropene		ND		ND		ND
1,2-Epoxybutane		ND		ND		ND
Ethyl acrylate		ND		ND		ND
Ethylbenzene	BE	1.292		ND	BE	1.292
n-Hexane	BE	3.320	BJ	0.001	BEJ	3.321
2-Hexanone		ND		ND		ND
Iodomethane		ND		ND		ND
Isooctane		ND		ND		ND
Methyl methacrylate		ND		ND		ND
Methylene chloride		ND	BJ	0.004	BJ	0.004
4-Methyl-2-pentanone		ND		ND		ND
MTBE		no data		no data		no data
Styrene		ND	BJ	0.002	BJ	0.002
1,1,2,2-Tetrachloroethane		ND		ND		ND
Tetrachloroethene		ND		ND		ND
Toluene	BE	2.010	BJ	0.005	BEJ	2.015
1,1,1-Trichloroethane		ND		ND		ND
1,1,2-Trichloroethane		ND		ND		ND
Trichloroethene		ND		ND		ND
Trichlorofluoromethane		ND		ND		ND
Vinyl acetate		ND		ND		ND
Vinyl bromide		ND		ND		ND
Vinyl chloride		ND		ND		ND
m-/p-Xylene	BE	7.039	BJ	0.001	BEJ	7.040
o-Xylene	BE	2.084		ND	BE	2.084

154

* Analytical Flags: B = compound present in lab blank, E = concentration found above calibration limit, J = compound detected, but below the quantitation limit.

SW-846 Method 0030 Catch Weights in Micrograms, Test Run S-V-1, Test Set 4
Samples: S-V-1-4A (Tenax tube) and S-V-1-4B (Tenax/charocal tube)

	Sample ID					
	S-V-1-4A		S-V-1-4B			TOTAL
Target Compound	Flag*	catch, µg	Flag*	catch, µg	Flag*	catch, µg
Acetone	B	0.349	BJ	0.006	BJ	0.355
Acrylonitrile		ND		ND		ND
Allyl chloride		ND		ND		ND
Benzene	BE	1.043	BJ	0.011	BEJ	1.054
Bromodichloromethane		ND		ND		ND
Bromoform		ND		ND		ND
Bromomethane	BJ	0.022	BJ	0.042	BJ	0.064
1,3-Butadiene		ND		ND		ND
2-Butanone		ND		ND		ND
Carbon disulfide		ND		ND		ND
Carbon tetrachloride		ND		ND		ND
Chlorobenzene		ND		ND		ND
Chloroethane		ND		ND		ND
Chloroform		ND		ND		ND
Chloromethane	B	0.098	B	0.157	B	0.255
Cumene		ND		ND		ND
Dibromochloromethane		ND		ND		ND
1,2-Dibromoethane		ND		ND		ND
1,1-Dichloroethane		ND		ND		ND
1,2-Dichloroethane		ND		ND		ND
1,1-Dichloroethene		ND		ND		ND
cis-1,2-Dichloroethene		ND		ND		ND
trans-1,2-Dichloroethene		ND		ND		ND
1,2-Dichloropropane		ND		ND		ND
cis-1,3-Dichloropropene		ND		ND		ND
trans-1,3-Dichloropropene		ND		ND		ND
1,2-Epoxybutane		ND		ND		ND
Ethyl acrylate		ND		ND		ND
Ethylbenzene	B	0.808		ND	B	0.808
n-Hexane	BE	2.661	BJ	0.001	BEJ	2.662
2-Hexanone		ND		ND		ND
Iodomethane		ND		ND		ND
Isooctane	J	0.085		ND	J	0.085
Methyl methacrylate		ND		ND		ND
Methylene chloride		ND	BJ	0.002	BJ	0.002
4-Methyl-2-pentanone		ND		ND		ND
MTBE		no data		no data		no data
Styrene		ND	BJ	0.001	BJ	0.001
1,1,2,2-Tetrachloroethane		ND		ND		ND
Tetrachloroethene		ND		ND		ND
Toluene	BE	1.376	BJ	0.004	BEJ	1.380
1,1,1-Trichloroethane		ND		ND		ND
1,1,2-Trichloroethane		ND		ND		ND
Trichloroethene		ND		ND		ND
Trichlorofluoromethane		ND		ND		ND
Vinyl acetate		ND		ND		ND
Vinyl bromide		ND		ND		ND
Vinyl chloride		ND		ND		ND
m-/p-Xylene	BE	4.068		ND	BE	4.068
o-Xylene	BE	1.203		ND	BE	1.203

155

* Analytical Flags: B = compound present in lab blank, E = concentration found above calibration limit, J = compound detected, but below the quantitation limit.

Summary of Stack Gas Parameters and Test Results
Volatile Organics - SW-846 Method 0030
Silo Exhaust Duct
Asphalt Plant C - California

	Run Numbers	**S-V-2-4**
	Test Date	7/25/98
	Sample Times	0910-0920
	Net Run Time, minutes	10
P_{bar}	Barometric Pressure, inches Hg	29.26
γ	Dry Gas Meter calibration factor	1.0309
V_m	Sample Volume, liters	2.490
T_m	Avg. Meter temperature, °R	537
ΔH	Pressure diff. of meter, in. H_2O	0.8
$V_{m(std)}$	Sample Volume, dry std. liters	2.473
Q_s	Volumetric Flow Rate, dscfm	445
	Tons of asphalt per test period	46.3

Acetone

Molecular Weight, g/g-mole	58.08
Target Catch, µg	{2.054}
Concentration, mg/dscm	{0.831}
Concentration, ppbvd	{344}
Emission Rate, lb/test period	{2.31E-04}
Emission Rate, lb/ton	{4.98E-06}

Acrylonitrile

Molecular Weight, g/g-mole	53.06
Target Catch, µg	ND
Concentration, mg/dscm	ND
Concentration, ppbvd	ND
Emission Rate, lb/test period	ND
Emission Rate, lb/ton	ND

Allyl chloride

Molecular Weight, g/g-mole	76.53
Target Catch, µg	ND
Concentration, mg/dscm	ND
Concentration, ppbvd	ND
Emission Rate, lb/test period	ND
Emission Rate, lb/ton	ND

Summary of Stack Gas Parameters and Test Results
Volatile Organics - SW-846 Method 0030
Silo Exhaust Duct
Asphalt Plant C - California

Run Numbers	S-V-2-4
Benzene	
Molecular Weight, g/g-mole	78.11
Target Catch, µg	{0.717}
Concentration, mg/dscm	{0.290}
Concentration, ppbvd	{89.3}
Emission Rate, lb/test period	{8.05E-05}
Emission Rate, lb/ton	{1.74E-06}
Bromodichloromethane	
Molecular Weight, g/g-mole	163.82
Target Catch, µg	ND
Concentration, mg/dscm	ND
Concentration, ppbvd	ND
Emission Rate, lb/test period	ND
Emission Rate, lb/ton	ND
Bromoform	
Molecular Weight, g/g-mole	252.77
Target Catch, µg	ND
Concentration, mg/dscm	ND
Concentration, ppbvd	ND
Emission Rate, lb/test period	ND
Emission Rate, lb/ton	ND
Bromomethane	
Molecular Weight, g/g-mole	94.95
Target Catch, µg	0.227
Concentration, mg/dscm	0.0918
Concentration, ppbvd	23.3
Emission Rate, lb/test period	2.55E-05
Emission Rate, lb/ton	5.51E-07
1,3-Butadiene	
Molecular Weight, g/g-mole	58.08
Target Catch, µg	ND
Concentration, mg/dscm	ND
Concentration, ppbvd	ND
Emission Rate, lb/test period	ND
Emission Rate, lb/ton	ND

Summary of Stack Gas Parameters and Test Results
Volatile Organics - SW-846 Method 0030
Silo Exhaust Duct
Asphalt Plant C - California

Run Numbers	S-V-2-4
2-Butanone	
Molecular Weight, g/g-mole	72.10
Target Catch, µg	{1.402}
Concentration, mg/dscm	{0.567}
Concentration, ppbvd	{189}
Emission Rate, lb/test period	{1.58E-04}
Emission Rate, lb/ton	{3.40E-06}
Carbon disulfide	
Molecular Weight, g/g-mole	76.14
Target Catch, µg	0.943
Concentration, mg/dscm	0.381
Concentration, ppbvd	120
Emission Rate, lb/test period	1.06E-04
Emission Rate, lb/ton	2.29E-06
Carbon tetrachloride	
Molecular Weight, g/g-mole	153.84
Target Catch, µg	ND
Concentration, mg/dscm	ND
Concentration, ppbvd	ND
Emission Rate, lb/test period	ND
Emission Rate, lb/ton	ND
Chlorobenzene	
Molecular Weight, g/g-mole	112.56
Target Catch, µg	ND
Concentration, mg/dscm	ND
Concentration, ppbvd	ND
Emission Rate, lb/test period	ND
Emission Rate, lb/ton	ND
Chloroethane	
Molecular Weight, g/g-mole	64.52
Target Catch, µg	0.311
Concentration, mg/dscm	0.126
Concentration, ppbvd	46.9
Emission Rate, lb/test period	3.49E-05
Emission Rate, lb/ton	7.55E-07

Summary of Stack Gas Parameters and Test Results
Volatile Organics - SW-846 Method 0030
Silo Exhaust Duct
Asphalt Plant C - California

Run Numbers	S-V-2-4
Chloroform	
Molecular Weight, g/g-mole	119.39
Target Catch, µg	ND
Concentration, mg/dscm	ND
Concentration, ppbvd	ND
Emission Rate, lb/test period	ND
Emission Rate, lb/ton	ND
Chloromethane	
Molecular Weight, g/g-mole	50.49
Target Catch, µg	1.156
Concentration, mg/dscm	0.467
Concentration, ppbvd	223
Emission Rate, lb/test period	1.30E-04
Emission Rate, lb/ton	2.80E-06
Cumene	
Molecular Weight, g/g-mole	120.19
Target Catch, µg	ND
Concentration, mg/dscm	ND
Concentration, ppbvd	ND
Emission Rate, lb/test period	ND
Emission Rate, lb/ton	ND
Dibromochloromethane	
Molecular Weight, g/g-mole	208.27
Target Catch, µg	ND
Concentration, mg/dscm	ND
Concentration, ppbvd	ND
Emission Rate, lb/test period	ND
Emission Rate, lb/ton	ND
1,2-Dibromoethane	
Molecular Weight, g/g-mole	187.88
Target Catch, µg	ND
Concentration, mg/dscm	ND
Concentration, ppbvd	ND
Emission Rate, lb/test period	ND
Emission Rate, lb/ton	ND

Summary of Stack Gas Parameters and Test Results
Volatile Organics - SW-846 Method 0030
Silo Exhaust Duct
Asphalt Plant C - California

Run Numbers	S-V-2-4
1,1-Dichloroethane	
Molecular Weight, g/g-mole	98.97
Target Catch, µg	ND
Concentration, mg/dscm	ND
Concentration, ppbvd	ND
Emission Rate, lb/test period	ND
Emission Rate, lb/ton	ND
1,2-Dichloroethane	
Molecular Weight, g/g-mole	98.96
Target Catch, µg	ND
Concentration, mg/dscm	ND
Concentration, ppbvd	ND
Emission Rate, lb/test period	ND
Emission Rate, lb/ton	ND
1,1-Dichloroethene	
Molecular Weight, g/g-mole	96.95
Target Catch, µg	ND
Concentration, mg/dscm	ND
Concentration, ppbvd	ND
Emission Rate, lb/test period	ND
Emission Rate, lb/ton	ND
cis-1,2-Dichloroethene	
Molecular Weight, g/g-mole	96.95
Target Catch, µg	ND
Concentration, mg/dscm	ND
Concentration, ppbvd	ND
Emission Rate, lb/test period	ND
Emission Rate, lb/ton	ND
trans-1,2-Dichloroethene	
Molecular Weight, g/g-mole	96.95
Target Catch, µg	ND
Concentration, mg/dscm	ND
Concentration, ppbvd	ND
Emission Rate, lb/test period	ND
Emission Rate, lb/ton	ND

Summary of Stack Gas Parameters and Test Results
Volatile Organics - SW-846 Method 0030
Silo Exhaust Duct
Asphalt Plant C - California

Run Numbers	S-V-2-4
1,2-Dichloropropane	
Molecular Weight, g/g-mole	112.99
Target Catch, µg	ND
Concentration, mg/dscm	ND
Concentration, ppbvd	ND
Emission Rate, lb/test period	ND
Emission Rate, lb/ton	ND
cis-1,3-Dichloropropene	
Molecular Weight, g/g-mole	110.98
Target Catch, µg	ND
Concentration, mg/dscm	ND
Concentration, ppbvd	ND
Emission Rate, lb/test period	ND
Emission Rate, lb/ton	ND
trans-1,3-Dichloropropene	
Molecular Weight, g/g-mole	110.98
Target Catch, µg	ND
Concentration, mg/dscm	ND
Concentration, ppbvd	ND
Emission Rate, lb/test period	ND
Emission Rate, lb/ton	ND
1,2-Epoxybutane	
Molecular Weight, g/g-mole	72.12
Target Catch, µg	ND
Concentration, mg/dscm	ND
Concentration, ppbvd	ND
Emission Rate, lb/test period	ND
Emission Rate, lb/ton	ND
Ethyl acrylate	
Molecular Weight, g/g-mole	100.11
Target Catch, µg	ND
Concentration, mg/dscm	ND
Concentration, ppbvd	ND
Emission Rate, lb/test period	ND
Emission Rate, lb/ton	ND

Summary of Stack Gas Parameters and Test Results
Volatile Organics - SW-846 Method 0030
Silo Exhaust Duct
Asphalt Plant C - California

	Run Numbers	S-V-2-4
Ethylbenzene		
	Molecular Weight, g/g-mole	106.16
	Target Catch, µg	{0.386}
	Concentration, mg/dscm	{0.156}
	Concentration, ppbvd	{35.4}
	Emission Rate, lb/test period	{4.34E-05}
	Emission Rate, lb/ton	{9.37E-07}
n-Hexane		
	Molecular Weight, g/g-mole	86.17
	Target Catch, µg	{1.425}
	Concentration, mg/dscm	{0.576}
	Concentration, ppbvd	{161}
	Emission Rate, lb/test period	{1.60E-04}
	Emission Rate, lb/ton	{3.46E-06}
2-Hexanone		
	Molecular Weight, g/g-mole	100.16
	Target Catch, µg	ND
	Concentration, mg/dscm	ND
	Concentration, ppbvd	ND
	Emission Rate, lb/test period	ND
	Emission Rate, lb/ton	ND
Iodomethane		
	Molecular Weight, g/g-mole	141.95
	Target Catch, µg	ND
	Concentration, mg/dscm	ND
	Concentration, ppbvd	ND
	Emission Rate, lb/test period	ND
	Emission Rate, lb/ton	ND
Isooctane		
	Molecular Weight, g/g-mole	114.22
	Target Catch, µg	{0.001}
	Concentration, mg/dscm	{4.04E-04}
	Concentration, ppbvd	{0.0852}
	Emission Rate, lb/test period	{1.12E-07}
	Emission Rate, lb/ton	{2.43E-09}

Summary of Stack Gas Parameters and Test Results
Volatile Organics - SW-846 Method 0030
Silo Exhaust Duct
Asphalt Plant C - California

	Run Numbers	S-V-2-4
Methyl methacrylate		
	Molecular Weight, g/g-mole	86.09
	Target Catch, µg	ND
	Concentration, mg/dscm	ND
	Concentration, ppbvd	ND
	Emission Rate, lb/test period	ND
	Emission Rate, lb/ton	ND
Methylene chloride		
	Molecular Weight, g/g-mole	84.94
	Target Catch, µg	{0.020}
	Concentration, mg/dscm	{8.09E-03}
	Concentration, ppbvd	{2.29}
	Emission Rate, lb/test period	{2.25E-06}
	Emission Rate, lb/ton	{4.85E-08}
4-Methyl-2-pentanone		
	Molecular Weight, g/g-mole	100.16
	Target Catch, µg	ND
	Concentration, mg/dscm	ND
	Concentration, ppbvd	ND
	Emission Rate, lb/test period	ND
	Emission Rate, lb/ton	ND
MTBE		
	Molecular Weight, g/g-mole	88.15
	Target Catch, µg	no data
	Concentration, mg/dscm	no data
	Concentration, ppbvd	no data
	Emission Rate, lb/test period	no data
	Emission Rate, lb/ton	no data
Styrene		
	Molecular Weight, g/g-mole	104.14
	Target Catch, µg	0.146
	Concentration, mg/dscm	0.0590
	Concentration, ppbvd	13.6
	Emission Rate, lb/test period	1.64E-05
	Emission Rate, lb/ton	3.54E-07

Summary of Stack Gas Parameters and Test Results
Volatile Organics - SW-846 Method 0030
Silo Exhaust Duct
Asphalt Plant C - California

Run Numbers	S-V-2-4
1,1,2,2-Tetrachloroethane	
Molecular Weight, g/g-mole	167.86
Target Catch, µg	ND
Concentration, mg/dscm	ND
Concentration, ppbvd	ND
Emission Rate, lb/test period	ND
Emission Rate, lb/ton	ND
Tetrachloroethene	
Molecular Weight, g/g-mole	165.85
Target Catch, µg	ND
Concentration, mg/dscm	ND
Concentration, ppbvd	ND
Emission Rate, lb/test period	ND
Emission Rate, lb/ton	ND
Toluene	
Molecular Weight, g/g-mole	92.13
Target Catch, µg	{0.829}
Concentration, mg/dscm	{0.335}
Concentration, ppbvd	{87.5}
Emission Rate, lb/test period	{9.31E-05}
Emission Rate, lb/ton	{2.01E-06}
1,1,1-Trichloroethane	
Molecular Weight, g/g-mole	133.42
Target Catch, µg	ND
Concentration, mg/dscm	ND
Concentration, ppbvd	ND
Emission Rate, lb/test period	ND
Emission Rate, lb/ton	ND
1,1,2-Trichloroethane	
Molecular Weight, g/g-mole	133.42
Target Catch, µg	ND
Concentration, mg/dscm	ND
Concentration, ppbvd	ND
Emission Rate, lb/test period	ND
Emission Rate, lb/ton	ND

Summary of Stack Gas Parameters and Test Results
Volatile Organics - SW-846 Method 0030
Silo Exhaust Duct
Asphalt Plant C - California

Run Numbers	S-V-2-4
Trichloroethene	
Molecular Weight, g/g-mole	131.40
Target Catch, µg	ND
Concentration, mg/dscm	ND
Concentration, ppbvd	ND
Emission Rate, lb/test period	ND
Emission Rate, lb/ton	ND
Trichlorofluoromethane	
Molecular Weight, g/g-mole	137.38
Target Catch, µg	ND
Concentration, mg/dscm	ND
Concentration, ppbvd	ND
Emission Rate, lb/test period	ND
Emission Rate, lb/ton	ND
Vinyl acetate	
Molecular Weight, g/g-mole	86.09
Target Catch, µg	ND
Concentration, mg/dscm	ND
Concentration, ppbvd	ND
Emission Rate, lb/test period	ND
Emission Rate, lb/ton	ND
Vinyl bromide	
Molecular Weight, g/g-mole	106.96
Target Catch, µg	ND
Concentration, mg/dscm	ND
Concentration, ppbvd	ND
Emission Rate, lb/test period	ND
Emission Rate, lb/ton	ND
Vinyl chloride	
Molecular Weight, g/g-mole	62.50
Target Catch, µg	ND
Concentration, mg/dscm	ND
Concentration, ppbvd	ND
Emission Rate, lb/test period	ND
Emission Rate, lb/ton	ND

Summary of Stack Gas Parameters and Test Results
Volatile Organics - SW-846 Method 0030
Silo Exhaust Duct
Asphalt Plant C - California

	Run Numbers	S-V-2-4
m-/p-Xylene		
	Molecular Weight, g/g-mole	106.16
	Target Catch, µg	{2.109}
	Concentration, mg/dscm	{0.853}
	Concentration, ppbvd	{193}
	Emission Rate, lb/test period	{2.37E-04}
	Emission Rate, lb/ton	{5.12E-06}
o-Xylene		
	Molecular Weight, g/g-mole	106.16
	Target Catch, µg	0.784
	Concentration, mg/dscm	0.317
	Concentration, ppbvd	71.8
	Emission Rate, lb/test period	8.81E-05
	Emission Rate, lb/ton	1.90E-06

ND indicates compound was not detected. A zero was used in the total and the value enc
Estimated values and totals using estimated values are enclosed in brackets {}.

SW-846 Method 0030 Catch Weights in Micrograms, Test Run S-V-2, Test Set 4
Samples: S-V-2-4A (Tenax tube) and S-V-2-4B (Tenax/charocal tube)

	Sample ID					
		S-V-2-4A		S-V-2-4B		TOTAL
Target Compound	Flag*	catch, µg	Flag*	catch, µg	Flag*	catch, µg
Acetone	BE	2.048	BJ	0.006	BEJ	2.054
Acrylonitrile		ND		ND		ND
Allyl chloride		ND		ND		ND
Benzene	B	0.711	BJ	0.006	BJ	0.717
Bromodichloromethane		ND		ND		ND
Bromoform		ND		ND		ND
Bromomethane	B	0.086	B	0.141	B	0.227
1,3-Butadiene		ND		ND		ND
2-Butanone	BE	1.402		ND	BE	1.402
Carbon disulfide		0.943		ND		0.943
Carbon tetrachloride		ND		ND		ND
Chlorobenzene		ND		ND		ND
Chloroethane		0.311		ND		0.311
Chloroform		ND		ND		ND
Chloromethane	B	0.390	B	0.766	B	1.156
Cumene		ND		ND		ND
Dibromochloromethane		ND		ND		ND
1,2-Dibromoethane		ND		ND		ND
1,1-Dichloroethane		ND		ND		ND
1,2-Dichloroethane		ND		ND		ND
1,1-Dichloroethene		ND		ND		ND
cis-1,2-Dichloroethene		ND		ND		ND
trans-1,2-Dichloroethene		ND		ND		ND
1,2-Dichloropropane		ND		ND		ND
cis-1,3-Dichloropropene		ND		ND		ND
trans-1,3-Dichloropropene		ND		ND		ND
1,2-Epoxybutane		ND		ND		ND
Ethyl acrylate		ND		ND		ND
Ethylbenzene	B	0.385	BJ	0.001	BJ	0.386
n-Hexane	BE	1.423	BJ	0.002	BEJ	1.425
2-Hexanone		ND		ND		ND
Iodomethane		ND		ND		ND
Isooctane		ND	J	0.001	J	0.001
Methyl methacrylate		ND		ND		ND
Methylene chloride		ND	BJ	0.020	BJ	0.020
4-Methyl-2-pentanone		ND		ND		ND
MTBE		no data		no data		no data
Styrene	B	0.145	BJ	0.001	BJ	0.146
1,1,2,2-Tetrachloroethane		ND		ND		ND
Tetrachloroethene		ND		ND		ND
Toluene	B	0.820	BJ	0.009	BJ	0.829
1,1,1-Trichloroethane		ND		ND		ND
1,1,2-Trichloroethane		ND		ND		ND
Trichloroethene		ND		ND		ND
Trichlorofluoromethane		ND		ND		ND
Vinyl acetate		ND		ND		ND
Vinyl bromide		ND		ND		ND
Vinyl chloride		ND		ND		ND
m-/p-Xylene	BE	2.108	BJ	0.001	BEJ	2.109
o-Xylene	B	0.784		ND	B	0.784

167

* Analytical Flags: B = compound present in lab blank, E = concentration found above calibration limit, J = compound detected, but below the quantitation limit.

Summary of Stack Gas Parameters and Test Results
Volatile Organics - SW-846 Method 0030
Silo Exhaust Duct
Asphalt Plant C - California

	Run Number	S-V-3-3
	Run Date	7/27/98
	Run Time	0938-0943
	Net Run Time, minutes	5
P_{bar}	Barometric Pressure, inches Hg	29.16
γ	Dry Gas Meter calibration factor	0.9360
V_m	Sample Volume, liters	2.480
T_m	Avg. Meter temperature, °R	542
ΔH	Pressure diff. of meter, in. H_2O	1.0
$V_{m(std)}$	Sample Volume, dry std. liters	2.211
Q_s	Volumetric Flow Rate, dscfm	230
	Tons of asphalt per test period	47.1

Acetone

Molecular Weight, g/g-mole	58.08
Target Catch, µg	{3.199}
Concentration, mg/dscm	{1.45}
Concentration, ppbvd	{599}
Emission Rate, lb/test period	{1.04E-04}
Emission Rate, lb/ton	{2.21E-06}

Acrylonitrile

Molecular Weight, g/g-mole	53.06
Target Catch, µg	ND
Concentration, mg/dscm	ND
Concentration, ppbvd	ND
Emission Rate, lb/test period	ND
Emission Rate, lb/ton	ND

Allyl chloride

Molecular Weight, g/g-mole	76.53
Target Catch, µg	ND
Concentration, mg/dscm	ND
Concentration, ppbvd	ND
Emission Rate, lb/test period	ND
Emission Rate, lb/ton	ND

Summary of Stack Gas Parameters and Test Results
Volatile Organics - SW-846 Method 0030
Silo Exhaust Duct
Asphalt Plant C - California

Run Number	S-V-3-3
Benzene	
Molecular Weight, g/g-mole	78.11
Target Catch, µg	{1.664}
Concentration, mg/dscm	{0.752}
Concentration, ppbvd	{232}
Emission Rate, lb/test period	{5.40E-05}
Emission Rate, lb/ton	{1.15E-06}
Bromodichloromethane	
Molecular Weight, g/g-mole	163.82
Target Catch, µg	ND
Concentration, mg/dscm	ND
Concentration, ppbvd	ND
Emission Rate, lb/test period	ND
Emission Rate, lb/ton	ND
Bromoform	
Molecular Weight, g/g-mole	252.77
Target Catch, µg	ND
Concentration, mg/dscm	ND
Concentration, ppbvd	ND
Emission Rate, lb/test period	ND
Emission Rate, lb/ton	ND
Bromomethane	
Molecular Weight, g/g-mole	94.95
Target Catch, µg	0.130
Concentration, mg/dscm	0.0588
Concentration, ppbvd	14.9
Emission Rate, lb/test period	4.22E-06
Emission Rate, lb/ton	8.96E-08
1,3-Butadiene	
Molecular Weight, g/g-mole	58.08
Target Catch, µg	ND
Concentration, mg/dscm	ND
Concentration, ppbvd	ND
Emission Rate, lb/test period	ND
Emission Rate, lb/ton	ND

Summary of Stack Gas Parameters and Test Results
Volatile Organics - SW-846 Method 0030
Silo Exhaust Duct
Asphalt Plant C - California

Run Number	S-V-3-3
2-Butanone	
Molecular Weight, g/g-mole	72.10
Target Catch, µg	{2.931}
Concentration, mg/dscm	{1.33}
Concentration, ppbvd	{442}
Emission Rate, lb/test period	{9.52E-05}
Emission Rate, lb/ton	{2.02E-06}
Carbon disulfide	
Molecular Weight, g/g-mole	76.14
Target Catch, µg	0.571
Concentration, mg/dscm	0.258
Concentration, ppbvd	81.6
Emission Rate, lb/test period	1.85E-05
Emission Rate, lb/ton	3.94E-07
Carbon tetrachloride	
Molecular Weight, g/g-mole	153.84
Target Catch, µg	ND
Concentration, mg/dscm	ND
Concentration, ppbvd	ND
Emission Rate, lb/test period	ND
Emission Rate, lb/ton	ND
Chlorobenzene	
Molecular Weight, g/g-mole	112.56
Target Catch, µg	ND
Concentration, mg/dscm	ND
Concentration, ppbvd	ND
Emission Rate, lb/test period	ND
Emission Rate, lb/ton	ND
Chloroethane	
Molecular Weight, g/g-mole	64.52
Target Catch, µg	ND
Concentration, mg/dscm	ND
Concentration, ppbvd	ND
Emission Rate, lb/test period	ND
Emission Rate, lb/ton	ND

Summary of Stack Gas Parameters and Test Results
Volatile Organics - SW-846 Method 0030
Silo Exhaust Duct
Asphalt Plant C - California

Run Number	S-V-3-3
Chloroform	
Molecular Weight, g/g-mole	119.39
Target Catch, µg	ND
Concentration, mg/dscm	ND
Concentration, ppbvd	ND
Emission Rate, lb/test period	ND
Emission Rate, lb/ton	ND
Chloromethane	
Molecular Weight, g/g-mole	50.49
Target Catch, µg	0.606
Concentration, mg/dscm	0.274
Concentration, ppbvd	131
Emission Rate, lb/test period	1.97E-05
Emission Rate, lb/ton	4.18E-07
Cumene	
Molecular Weight, g/g-mole	120.19
Target Catch, µg	ND
Concentration, mg/dscm	ND
Concentration, ppbvd	ND
Emission Rate, lb/test period	ND
Emission Rate, lb/ton	ND
Dibromochloromethane	
Molecular Weight, g/g-mole	208.27
Target Catch, µg	ND
Concentration, mg/dscm	ND
Concentration, ppbvd	ND
Emission Rate, lb/test period	ND
Emission Rate, lb/ton	ND
1,2-Dibromoethane	
Molecular Weight, g/g-mole	187.88
Target Catch, µg	ND
Concentration, mg/dscm	ND
Concentration, ppbvd	ND
Emission Rate, lb/test period	ND
Emission Rate, lb/ton	ND

Summary of Stack Gas Parameters and Test Results
Volatile Organics - SW-846 Method 0030
Silo Exhaust Duct
Asphalt Plant C - California

Run Number	S-V-3-3
1,1-Dichloroethane	
Molecular Weight, g/g-mole	98.97
Target Catch, µg	ND
Concentration, mg/dscm	ND
Concentration, ppbvd	ND
Emission Rate, lb/test period	ND
Emission Rate, lb/ton	ND
1,2-Dichloroethane	
Molecular Weight, g/g-mole	98.96
Target Catch, µg	ND
Concentration, mg/dscm	ND
Concentration, ppbvd	ND
Emission Rate, lb/test period	ND
Emission Rate, lb/ton	ND
1,1-Dichloroethene	
Molecular Weight, g/g-mole	96.95
Target Catch, µg	ND
Concentration, mg/dscm	ND
Concentration, ppbvd	ND
Emission Rate, lb/test period	ND
Emission Rate, lb/ton	ND
cis-1,2-Dichloroethene	
Molecular Weight, g/g-mole	96.95
Target Catch, µg	ND
Concentration, mg/dscm	ND
Concentration, ppbvd	ND
Emission Rate, lb/test period	ND
Emission Rate, lb/ton	ND
trans-1,2-Dichloroethene	
Molecular Weight, g/g-mole	96.95
Target Catch, µg	ND
Concentration, mg/dscm	ND
Concentration, ppbvd	ND
Emission Rate, lb/test period	ND
Emission Rate, lb/ton	ND

Summary of Stack Gas Parameters and Test Results
Volatile Organics - SW-846 Method 0030
Silo Exhaust Duct
Asphalt Plant C - California

Run Number	S-V-3-3
1,2-Dichloropropane	
Molecular Weight, g/g-mole	112.99
Target Catch, µg	ND
Concentration, mg/dscm	ND
Concentration, ppbvd	ND
Emission Rate, lb/test period	ND
Emission Rate, lb/ton	ND
cis-1,3-Dichloropropene	
Molecular Weight, g/g-mole	110.98
Target Catch, µg	ND
Concentration, mg/dscm	ND
Concentration, ppbvd	ND
Emission Rate, lb/test period	ND
Emission Rate, lb/ton	ND
trans-1,3-Dichloropropene	
Molecular Weight, g/g-mole	110.98
Target Catch, µg	ND
Concentration, mg/dscm	ND
Concentration, ppbvd	ND
Emission Rate, lb/test period	ND
Emission Rate, lb/ton	ND
1,2-Epoxybutane	
Molecular Weight, g/g-mole	72.12
Target Catch, µg	ND
Concentration, mg/dscm	ND
Concentration, ppbvd	ND
Emission Rate, lb/test period	ND
Emission Rate, lb/ton	ND
Ethyl acrylate	
Molecular Weight, g/g-mole	100.11
Target Catch, µg	ND
Concentration, mg/dscm	ND
Concentration, ppbvd	ND
Emission Rate, lb/test period	ND
Emission Rate, lb/ton	ND

Summary of Stack Gas Parameters and Test Results
Volatile Organics - SW-846 Method 0030
Silo Exhaust Duct
Asphalt Plant C - California

Run Number	S-V-3-3
Ethylbenzene	
Molecular Weight, g/g-mole	106.16
Target Catch, µg	{2.716}
Concentration, mg/dscm	{1.23}
Concentration, ppbvd	{278}
Emission Rate, lb/test period	{8.82E-05}
Emission Rate, lb/ton	{1.87E-06}
n-Hexane	
Molecular Weight, g/g-mole	86.17
Target Catch, µg	{5.011}
Concentration, mg/dscm	{2.27}
Concentration, ppbvd	{633}
Emission Rate, lb/test period	{1.63E-04}
Emission Rate, lb/ton	{3.45E-06}
2-Hexanone	
Molecular Weight, g/g-mole	100.16
Target Catch, µg	ND
Concentration, mg/dscm	ND
Concentration, ppbvd	ND
Emission Rate, lb/test period	ND
Emission Rate, lb/ton	ND
Iodomethane	
Molecular Weight, g/g-mole	141.95
Target Catch, µg	ND
Concentration, mg/dscm	ND
Concentration, ppbvd	ND
Emission Rate, lb/test period	ND
Emission Rate, lb/ton	ND
Isooctane	
Molecular Weight, g/g-mole	114.22
Target Catch, µg	ND
Concentration, mg/dscm	ND
Concentration, ppbvd	ND
Emission Rate, lb/test period	ND
Emission Rate, lb/ton	ND

Summary of Stack Gas Parameters and Test Results
Volatile Organics - SW-846 Method 0030
Silo Exhaust Duct
Asphalt Plant C - California

Run Number	S-V-3-3
Methyl methacrylate	
Molecular Weight, g/g-mole	86.09
Target Catch, µg	ND
Concentration, mg/dscm	ND
Concentration, ppbvd	ND
Emission Rate, lb/test period	ND
Emission Rate, lb/ton	ND
Methylene chloride	
Molecular Weight, g/g-mole	84.94
Target Catch, µg	ND
Concentration, mg/dscm	ND
Concentration, ppbvd	ND
Emission Rate, lb/test period	ND
Emission Rate, lb/ton	ND
4-Methyl-2-pentanone	
Molecular Weight, g/g-mole	100.16
Target Catch, µg	ND
Concentration, mg/dscm	ND
Concentration, ppbvd	ND
Emission Rate, lb/test period	ND
Emission Rate, lb/ton	ND
MTBE	
Molecular Weight, g/g-mole	88.15
Target Catch, µg	no data
Concentration, mg/dscm	no data
Concentration, ppbvd	no data
Emission Rate, lb/test period	no data
Emission Rate, lb/ton	no data
Styrene	
Molecular Weight, g/g-mole	104.14
Target Catch, µg	0.490
Concentration, mg/dscm	0.222
Concentration, ppbvd	51.2
Emission Rate, lb/test period	1.59E-05
Emission Rate, lb/ton	3.38E-07

Summary of Stack Gas Parameters and Test Results
Volatile Organics - SW-846 Method 0030
Silo Exhaust Duct
Asphalt Plant C - California

Run Number	S-V-3-3
1,1,2,2-Tetrachloroethane	
Molecular Weight, g/g-mole	167.86
Target Catch, µg	ND
Concentration, mg/dscm	ND
Concentration, ppbvd	ND
Emission Rate, lb/test period	ND
Emission Rate, lb/ton	ND
Tetrachloroethene	
Molecular Weight, g/g-mole	165.85
Target Catch, µg	ND
Concentration, mg/dscm	ND
Concentration, ppbvd	ND
Emission Rate, lb/test period	ND
Emission Rate, lb/ton	ND
Toluene	
Molecular Weight, g/g-mole	92.13
Target Catch, µg	{3.903}
Concentration, mg/dscm	{1.76}
Concentration, ppbvd	{461}
Emission Rate, lb/test period	{1.27E-04}
Emission Rate, lb/ton	{2.69E-06}
1,1,1-Trichloroethane	
Molecular Weight, g/g-mole	133.42
Target Catch, µg	ND
Concentration, mg/dscm	ND
Concentration, ppbvd	ND
Emission Rate, lb/test period	ND
Emission Rate, lb/ton	ND
1,1,2-Trichloroethane	
Molecular Weight, g/g-mole	133.42
Target Catch, µg	ND
Concentration, mg/dscm	ND
Concentration, ppbvd	ND
Emission Rate, lb/test period	ND
Emission Rate, lb/ton	ND

Summary of Stack Gas Parameters and Test Results
Volatile Organics - SW-846 Method 0030
Silo Exhaust Duct
Asphalt Plant C - California

Run Number	S-V-3-3
Trichloroethene	
Molecular Weight, g/g-mole	131.40
Target Catch, µg	ND
Concentration, mg/dscm	ND
Concentration, ppbvd	ND
Emission Rate, lb/test period	ND
Emission Rate, lb/ton	ND
Trichlorofluoromethane	
Molecular Weight, g/g-mole	137.38
Target Catch, µg	ND
Concentration, mg/dscm	ND
Concentration, ppbvd	ND
Emission Rate, lb/test period	ND
Emission Rate, lb/ton	ND
Vinyl acetate	
Molecular Weight, g/g-mole	86.09
Target Catch, µg	ND
Concentration, mg/dscm	ND
Concentration, ppbvd	ND
Emission Rate, lb/test period	ND
Emission Rate, lb/ton	ND
Vinyl bromide	
Molecular Weight, g/g-mole	106.96
Target Catch, µg	ND
Concentration, mg/dscm	ND
Concentration, ppbvd	ND
Emission Rate, lb/test period	ND
Emission Rate, lb/ton	ND
Vinyl chloride	
Molecular Weight, g/g-mole	62.50
Target Catch, µg	ND
Concentration, mg/dscm	ND
Concentration, ppbvd	ND
Emission Rate, lb/test period	ND
Emission Rate, lb/ton	ND

Summary of Stack Gas Parameters and Test Results
Volatile Organics - SW-846 Method 0030
Silo Exhaust Duct
Asphalt Plant C - California

Run Number	S-V-3-3
m-/p-Xylene	
Molecular Weight, g/g-mole	106.16
Target Catch, µg	{12.924}
Concentration, mg/dscm	{5.84}
Concentration, ppbvd	{1,324}
Emission Rate, lb/test period	{4.20E-04}
Emission Rate, lb/ton	{8.91E-06}
o-Xylene	
Molecular Weight, g/g-mole	106.16
Target Catch, µg	{3.540}
Concentration, mg/dscm	{1.60}
Concentration, ppbvd	{363}
Emission Rate, lb/test period	{1.15E-04}
Emission Rate, lb/ton	{2.44E-06}

ND indicates compound was not detected. A zero was used in the total and the value enclosed in parentheses ().
Estimated values and totals using estimated values are enclosed in brackets {}.

SW-846 Method 0030 Catch Weights in Micrograms, Test Run S-V-3, Test Set 3
Samples: S-V-3-3A (Tenax tube) and S-V-3-3B (Tenax/charocal tube)

	Sample ID					
		S-V-3-3A		S-V-3-3B		TOTAL
Target Compound	**Flag***	**catch, µg**	**Flag***	**catch, µg**	**Flag***	**catch, µg**
Acetone	BE	3.124	B	0.075	BE	3.199
Acrylonitrile		ND		ND		ND
Allyl chloride		ND		ND		ND
Benzene	BE	1.627	BJ	0.037	BEJ	1.664
Bromodichloromethane		ND		ND		ND
Bromoform		ND		ND		ND
Bromomethane	B	0.059	B	0.071	B	0.130
1,3-Butadiene		ND		ND		ND
2-Butanone	BE	2.881	B	0.050	BE	2.931
Carbon disulfide		0.571		ND		0.571
Carbon tetrachloride		ND		ND		ND
Chlorobenzene		ND		ND		ND
Chloroethane		ND		ND		ND
Chloroform		ND		ND		ND
Chloromethane	B	0.253	B	0.353	B	0.606
Cumene		ND		ND		ND
Dibromochloromethane		ND		ND		ND
1,2-Dibromoethane		ND		ND		ND
1,1-Dichloroethane		ND		ND		ND
1,2-Dichloroethane		ND		ND		ND
1,1-Dichloroethene		ND		ND		ND
cis-1,2-Dichloroethene		ND		ND		ND
trans-1,2-Dichloroethene		ND		ND		ND
1,2-Dichloropropane		ND		ND		ND
cis-1,3-Dichloropropene		ND		ND		ND
trans-1,3-Dichloropropene		ND		ND		ND
1,2-Epoxybutane		ND		ND		ND
Ethyl acrylate		ND		ND		ND
Ethylbenzene	BE	2.716		ND	E	2.716
n-Hexane	BE	5.008	BJ	0.003	BEJ	5.011
2-Hexanone		ND		ND		ND
Iodomethane		ND		ND		ND
Isooctane		ND		ND		ND
Methyl methacrylate		ND		ND		ND
Methylene chloride		ND		ND		ND
4-Methyl-2-pentanone		ND		ND		ND
MTBE		no data		no data		no data
Styrene	B	0.490		ND		0.490
1,1,2,2-Tetrachloroethane		ND		ND		ND
Tetrachloroethene		ND		ND		ND
Toluene	BE	3.898	BJ	0.005	BEJ	3.903
1,1,1-Trichloroethane		ND		ND		ND
1,1,2-Trichloroethane		ND		ND		ND
Trichloroethene		ND		ND		ND
Trichlorofluoromethane		ND		ND		ND
Vinyl acetate		ND		ND		ND
Vinyl bromide		ND		ND		ND
Vinyl chloride		ND		ND		ND
m-/p-Xylene	BE	12.924		ND	E	12.924
o-Xylene	BE	3.540		ND	E	3.540

179

* Analytical Flags: B = compound present in lab blank, E = concentration found above calibration limit, J = compound detected, but below the quantitation limit.

Summary of Stack Gas Parameters and Test Results
GC/MS Qualitative Characterization of EPA Method 18 Samples
Silo Exhaust Duct
Asphalt Plant C, California

	RUN NUMBER	S-M18-1A	S-M18-2A	S-M18-3A
	RUN DATE	7/24/98	7/25/98	7/27/98
	RUN TIME	0920-1008	0710-0954	1023-1248
Θ	Net run time, minutes	120	120	50
P_{bar}	Barometric pressure, in Hg	29.28	29.26	29.16
	Bubble Meter Calibration Data			
	Pre-test			
	Time, seconds	60	60	60
	Volume, milliliters	977	993	1020
	Ambient Temperature, °F	68.0	67.8	84.7
	Post-test			
	Time, seconds	60	60	60
	Volume, milliliters	979	1004	992
	Ambient temperature, °F	68.4	75.2	93.7
ACT	Average calibration time, seconds	60.0	60.0	60.0
Vc	Average calibration volume, milliliters	978	999	1006
ta	Average ambient temperature, °F	68	72	89
$V_{m(std)}$	Standard Meter Volume, Liters, dry	114.8	116.4	47.1
Qsd	Stack Gas Volumetric Flow, dscfm	503	445	231
	Tons of asphalt loaded per test period	745.4	595.5	472.4
Benzene				
	Molecular Weight, g/g-mole	78.1	78.1	78.1
	Target Catch, µg	42.7	ND	ND
	Concentration, mg/dscm	0.372	ND	ND
	Concentration, ppbvd	115	ND	ND
	Emission Rate, lb/test period	1.40E-03	ND	ND
	Emission Rate, lb/ton	1.88E-06	ND	ND
Toluene				
	Molecular Weight, g/g-mole	92.1	92.1	92.1
	Target Catch, µg	294	ND	ND
	Concentration, mg/dscm	2.56	ND	ND
	Concentration, ppbvd	669	ND	ND
	Emission Rate, lb/test period	9.65E-03	ND	ND
	Emission Rate, lb/ton	1.29E-05	ND	ND

Summary of Stack Gas Parameters and Test Results
GC/MS Qualitative Characterization of EPA Method 18 Samples
Silo Exhaust Duct
Asphalt Plant C, California

RUN NUMBER	S-M18-1A	S-M18-2A	S-M18-3A
RUN DATE	7/24/98	7/25/98	7/27/98
RUN TIME	0920-1008	0710-0954	1023-1248
Trimethanolpentanol			
Molecular Weight, g/g-mole	130.0	130.0	130.0
Target Catch, µg	213	ND	ND
Concentration, mg/dscm	1.86	ND	ND
Concentration, ppbvd	343	ND	ND
Emission Rate, lb/test period	6.99E-03	ND	ND
Emission Rate, lb/ton	9.38E-06	ND	ND
Trimethylhexane (RT=11.5)			
Molecular Weight, g/g-mole	128.2	128.2	128.2
Target Catch, µg	397	ND	204
Concentration, mg/dscm	3.46	ND	4.33
Concentration, ppbvd	649	ND	812
Emission Rate, lb/test period	1.30E-02	ND	3.12E-03
Emission Rate, lb/ton	1.75E-05	ND	6.61E-06
Trimethylcyclohexane (RT=13.2)			
Molecular Weight, g/g-mole	126.1	126.1	126.1
Target Catch, µg	228	ND	ND
Concentration, mg/dscm	1.99	ND	ND
Concentration, ppbvd	379	ND	ND
Emission Rate, lb/test period	7.48E-03	ND	ND
Emission Rate, lb/ton	1.00E-05	ND	ND
Ethylbenzene			
Molecular Weight, g/g-mole	106.2	106.2	106.2
Target Catch, µg	126	ND	ND
Concentration, mg/dscm	1.10	ND	ND
Concentration, ppbvd	249	ND	ND
Emission Rate, lb/test period	4.14E-03	ND	ND
Emission Rate, lb/ton	5.55E-06	ND	ND
Ethylhexane			
Molecular Weight, g/g-mole	114.1	114.1	114.1
Target Catch, µg	618	ND	ND
Concentration, mg/dscm	5.38	ND	ND
Concentration, ppbvd	1,135	ND	ND
Emission Rate, lb/test period	2.03E-02	ND	ND
Emission Rate, lb/ton	2.72E-05	ND	ND

Summary of Stack Gas Parameters and Test Results
GC/MS Qualitative Characterization of EPA Method 18 Samples
Silo Exhaust Duct
Asphalt Plant C, California

RUN NUMBER	S-M18-1A	S-M18-2A	S-M18-3A
RUN DATE	7/24/98	7/25/98	7/27/98
RUN TIME	0920-1008	0710-0954	1023-1248
m-/p-Xylene (RT=13.8)			
Molecular Weight, g/g-mole	106.2	106.2	106.2
Target Catch, µg	571	ND	366
Concentration, mg/dscm	4.97	ND	7.77
Concentration, ppbvd	1,127	ND	1759
Emission Rate, lb/test period	1.87E-02	ND	5.60E-03
Emission Rate, lb/ton	2.51E-05	ND	1.19E-05
o-Xylene			
Molecular Weight, g/g-mole	106.2	106.2	106.2
Target Catch, µg	240	ND	ND
Concentration, mg/dscm	2.09	ND	ND
Concentration, ppbvd	474	ND	ND
Emission Rate, lb/test period	7.88E-03	ND	ND
Emission Rate, lb/ton	1.06E-05	ND	ND
Nonane (RT=15.0)			
Molecular Weight, g/g-mole	128.2	128.2	128.2
Target Catch, µg	236	ND	435
Concentration, mg/dscm	2.06	ND	9.23
Concentration, ppbvd	386	ND	1732
Emission Rate, lb/test period	7.75E-03	ND	6.66E-03
Emission Rate, lb/ton	1.04E-05	ND	1.41E-05
Methylpentadiene			
Molecular Weight, g/g-mole	82.1	82.1	82.1
Target Catch, µg	207	ND	ND
Concentration, mg/dscm	1.80	ND	ND
Concentration, ppbvd	528	ND	ND
Emission Rate, lb/test period	6.80E-03	ND	ND
Emission Rate, lb/ton	9.12E-06	ND	ND
Dimethyloctane (RT=15.9)			
Molecular Weight, g/g-mole	142.2	142.2	142.2
Target Catch, µg	306	ND	ND
Concentration, mg/dscm	2.67	ND	ND
Concentration, ppbvd	451	ND	ND
Emission Rate, lb/test period	1.00E-02	ND	ND
Emission Rate, lb/ton	1.35E-05	ND	ND

Summary of Stack Gas Parameters and Test Results
GC/MS Qualitative Characterization of EPA Method 18 Samples
Silo Exhaust Duct
Asphalt Plant C, California

RUN NUMBER	S-M18-1A	S-M18-2A	S-M18-3A
RUN DATE	7/24/98	7/25/98	7/27/98
RUN TIME	0920-1008	0710-0954	1023-1248
Methyloctane			
Molecular Weight, g/g-mole	128.2	128.2	128.2
Target Catch, µg	270	ND	ND
Concentration, mg/dscm	2.35	ND	ND
Concentration, ppbvd	441	ND	ND
Emission Rate, lb/test period	8.86E-03	ND	ND
Emission Rate, lb/ton	1.19E-05	ND	ND
Trimethylbenzene (RT=17.3)			
Molecular Weight, g/g-mole	120.1	120.1	120.1
Target Catch, µg	212	ND	ND
Concentration, mg/dscm	1.85	ND	ND
Concentration, ppbvd	370	ND	ND
Emission Rate, lb/test period	6.96E-03	ND	ND
Emission Rate, lb/ton	9.34E-06	ND	ND
Decane (RT=17.6)			
Molecular Weight, g/g-mole	142.2	142.2	142.2
Target Catch, µg	378	ND	493
Concentration, mg/dscm	3.29	ND	10.46
Concentration, ppbvd	557	ND	1770
Emission Rate, lb/test period	1.24E-02	ND	7.54E-03
Emission Rate, lb/ton	1.66E-05	ND	1.60E-05
Trimethylbenzene (RT=18.0)			
Molecular Weight, g/g-mole	120.1	120.1	120.1
Target Catch, µg	422	326	ND
Concentration, mg/dscm	3.68	2.80	ND
Concentration, ppbvd	736	561	ND
Emission Rate, lb/test period	1.39E-02	9.34E-03	ND
Emission Rate, lb/ton	1.86E-05	1.57E-05	ND
Dimethylnonane			
Molecular Weight, g/g-mole	156.2	156.2	156.2
Target Catch, µg	427	ND	ND
Concentration, mg/dscm	3.72	ND	ND
Concentration, ppbvd	573	ND	ND
Emission Rate, lb/test period	1.40E-02	ND	ND
Emission Rate, lb/ton	1.88E-05	ND	ND

Summary of Stack Gas Parameters and Test Results
GC/MS Qualitative Characterization of EPA Method 18 Samples
Silo Exhaust Duct
Asphalt Plant C, California

RUN NUMBER	S-M18-1A	S-M18-2A	S-M18-3A
RUN DATE	7/24/98	7/25/98	7/27/98
RUN TIME	0920-1008	0710-0954	1023-1248
Ethylmethylcyclopropane			
Molecular Weight, g/g-mole	84.1	84.1	84.1
Target Catch, µg	310	ND	ND
Concentration, mg/dscm	2.70	ND	ND
Concentration, ppbvd	772	ND	ND
Emission Rate, lb/test period	1.02E-02	ND	ND
Emission Rate, lb/ton	1.37E-05	ND	ND
Methylmethylenecyclohexane			
Molecular Weight, g/g-mole	110.1	110.1	110.1
Target Catch, µg	255	ND	ND
Concentration, mg/dscm	2.22	ND	ND
Concentration, ppbvd	485	ND	ND
Emission Rate, lb/test period	8.37E-03	ND	ND
Emission Rate, lb/ton	1.12E-05	ND	ND
Dipropylcyclopropene			
Molecular Weight, g/g-mole	124.1	124.1	124.1
Target Catch, µg	210	ND	ND
Concentration, mg/dscm	1.83	ND	ND
Concentration, ppbvd	355	ND	ND
Emission Rate, lb/test period	6.89E-03	ND	ND
Emission Rate, lb/ton	9.25E-06	ND	ND
Tetradecane (RT=20.0)			
Molecular Weight, g/g-mole	198.2	198.2	198.2
Target Catch, µg	444	ND	ND
Concentration, mg/dscm	3.87	ND	ND
Concentration, ppbvd	469	ND	ND
Emission Rate, lb/test period	1.46E-02	ND	ND
Emission Rate, lb/ton	1.96E-05	ND	ND
Decahydromethylnaphthalene (RT=20.5)			
Molecular Weight, g/g-mole	152.2	152.2	152.2
Target Catch, µg	247	449	ND
Concentration, mg/dscm	2.15	3.86	ND
Concentration, ppbvd	340	610	ND
Emission Rate, lb/test period	8.11E-03	1.29E-02	ND
Emission Rate, lb/ton	1.09E-05	2.16E-05	ND

Summary of Stack Gas Parameters and Test Results
GC/MS Qualitative Characterization of EPA Method 18 Samples
Silo Exhaust Duct
Asphalt Plant C, California

RUN NUMBER	S-M18-1A	S-M18-2A	S-M18-3A
RUN DATE	7/24/98	7/25/98	7/27/98
RUN TIME	0920-1008	0710-0954	1023-1248
Octadecyne			
Molecular Weight, g/g-mole	250.3	250.3	250.3
Target Catch, µg	314	ND	ND
Concentration, mg/dscm	2.74	ND	ND
Concentration, ppbvd	263	ND	ND
Emission Rate, lb/test period	1.03E-02	ND	ND
Emission Rate, lb/ton	1.38E-05	ND	ND
Methylundecane			
Molecular Weight, g/g-mole	170.2	170.2	170.2
Target Catch, µg	492	ND	ND
Concentration, mg/dscm	4.29	ND	ND
Concentration, ppbvd	606	ND	ND
Emission Rate, lb/test period	1.62E-02	ND	ND
Emission Rate, lb/ton	2.17E-05	ND	ND
Dimethylundecane (RT=22.5)			
Molecular Weight, g/g-mole	184.2	184.2	184.2
Target Catch, µg	538	ND	210
Concentration, mg/dscm	4.69	ND	4.46
Concentration, ppbvd	612	ND	582
Emission Rate, lb/test period	1.77E-02	ND	3.21E-03
Emission Rate, lb/ton	2.37E-05	ND	6.80E-06
Trimethyldecane			
Molecular Weight, g/g-mole	184.2	184.2	184.2
Target Catch, µg	246	ND	ND
Concentration, mg/dscm	2.14	ND	ND
Concentration, ppbvd	280	ND	ND
Emission Rate, lb/test period	8.08E-03	ND	ND
Emission Rate, lb/ton	1.08E-05	ND	ND
Tridecane (RT=24.1)			
Molecular Weight, g/g-mole	184.2	184.2	184.2
Target Catch, µg	393	825	520
Concentration, mg/dscm	3.42	7.09	11.03
Concentration, ppbvd	447	926	1441
Emission Rate, lb/test period	1.29E-02	2.36E-02	7.96E-03
Emission Rate, lb/ton	1.73E-05	3.97E-05	1.68E-05

185

Summary of Stack Gas Parameters and Test Results
GC/MS Qualitative Characterization of EPA Method 18 Samples
Silo Exhaust Duct
Asphalt Plant C, California

RUN NUMBER	S-M18-1A	S-M18-2A	S-M18-3A
RUN DATE	7/24/98	7/25/98	7/27/98
RUN TIME	0920-1008	0710-0954	1023-1248
Trimethyldodecane (RT=25.7)			
Molecular Weight, g/g-mole	212.2	212.2	212.2
Target Catch, µg	320	ND	257
Concentration, mg/dscm	2.79	ND	5.45
Concentration, ppbvd	316	ND	618
Emission Rate, lb/test period	1.05E-02	ND	3.93E-03
Emission Rate, lb/ton	1.41E-05	ND	8.32E-06
Trimethylheptane			
Molecular Weight, g/g-mole	142.2	142.2	142.2
Target Catch, µg	ND	279	ND
Concentration, mg/dscm	ND	2.40	ND
Concentration, ppbvd	ND	405	ND
Emission Rate, lb/test period	ND	7.99E-03	ND
Emission Rate, lb/ton	ND	1.34E-05	ND
2-Heptyn-1-ol			
Molecular Weight, g/g-mole	112.0	112.0	112.0
Target Catch, µg	ND	203	ND
Concentration, mg/dscm	ND	1.74	ND
Concentration, ppbvd	ND	375	ND
Emission Rate, lb/test period	ND	5.81E-03	ND
Emission Rate, lb/ton	ND	9.76E-06	ND
2,4-Dimethylheptane			
Molecular Weight, g/g-mole	128.2	128.2	128.2
Target Catch, µg	ND	288	ND
Concentration, mg/dscm	ND	2.47	ND
Concentration, ppbvd	ND	464	ND
Emission Rate, lb/test period	ND	8.25E-03	ND
Emission Rate, lb/ton	ND	1.39E-05	ND
3-Ethyl-2-methylheptane			
Molecular Weight, g/g-mole	142.2	142.2	142.2
Target Catch, µg	ND	192	ND
Concentration, mg/dscm	ND	1.65	ND
Concentration, ppbvd	ND	279	ND
Emission Rate, lb/test period	ND	5.50E-03	ND
Emission Rate, lb/ton	ND	9.23E-06	ND

Summary of Stack Gas Parameters and Test Results
GC/MS Qualitative Characterization of EPA Method 18 Samples
Silo Exhaust Duct
Asphalt Plant C, California

RUN NUMBER	S-M18-1A	S-M18-2A	S-M18-3A
RUN DATE	7/24/98	7/25/98	7/27/98
RUN TIME	0920-1008	0710-0954	1023-1248
Tetramethylcyclohexane (RT=16.7)			
Molecular Weight, g/g-mole	140.2	140.2	140.2
Target Catch, µg	ND	323	ND
Concentration, mg/dscm	ND	2.77	ND
Concentration, ppbvd	ND	476	ND
Emission Rate, lb/test period	ND	9.25E-03	ND
Emission Rate, lb/ton	ND	1.55E-05	ND
2-Methylnonane			
Molecular Weight, g/g-mole	142.2	142.2	142.2
Target Catch, µg	ND	378	ND
Concentration, mg/dscm	ND	3.25	ND
Concentration, ppbvd	ND	549	ND
Emission Rate, lb/test period	ND	1.08E-02	ND
Emission Rate, lb/ton	ND	1.82E-05	ND
2-Heptenal			
Molecular Weight, g/g-mole	112.0	112.0	112.0
Target Catch, µg	ND	437	ND
Concentration, mg/dscm	ND	3.75	ND
Concentration, ppbvd	ND	806	ND
Emission Rate, lb/test period	ND	1.25E-02	ND
Emission Rate, lb/ton	ND	2.10E-05	ND
1-methyl-4-(1-methylethylidene)-Cyclohexane			
Molecular Weight, g/g-mole	138.1	138.1	138.1
Target Catch, µg	ND	187	ND
Concentration, mg/dscm	ND	1.61	ND
Concentration, ppbvd	ND	280	ND
Emission Rate, lb/test period	ND	5.36E-03	ND
Emission Rate, lb/ton	ND	8.99E-06	ND
5-Methyl-3-undecene			
Molecular Weight, g/g-mole	112.1	112.1	112.1
Target Catch, µg	ND	421	ND
Concentration, mg/dscm	ND	3.62	ND
Concentration, ppbvd	ND	776	ND
Emission Rate, lb/test period	ND	1.21E-02	ND
Emission Rate, lb/ton	ND	2.02E-05	ND

Summary of Stack Gas Parameters and Test Results
GC/MS Qualitative Characterization of EPA Method 18 Samples
Silo Exhaust Duct
Asphalt Plant C, California

RUN NUMBER	S-M18-1A	S-M18-2A	S-M18-3A
RUN DATE	7/24/98	7/25/98	7/27/98
RUN TIME	0920-1008	0710-0954	1023-1248
5-Methyl-1-decene			
Molecular Weight, g/g-mole	154.2	154.2	154.2
Target Catch, µg	ND	183	ND
Concentration, mg/dscm	ND	1.57	ND
Concentration, ppbvd	ND	245	ND
Emission Rate, lb/test period	ND	5.24E-03	ND
Emission Rate, lb/ton	ND	8.80E-06	ND
Cyclodecene			
Molecular Weight, g/g-mole	138.1	138.1	138.1
Target Catch, µg	ND	265	ND
Concentration, mg/dscm	ND	2.28	ND
Concentration, ppbvd	ND	397	ND
Emission Rate, lb/test period	ND	7.59E-03	ND
Emission Rate, lb/ton	ND	1.27E-05	ND
Methylbicyclohexane-3-one			
Molecular Weight, g/g-mole	152.1	152.1	152.1
Target Catch, µg	ND	301	ND
Concentration, mg/dscm	ND	2.59	ND
Concentration, ppbvd	ND	409	ND
Emission Rate, lb/test period	ND	8.62E-03	ND
Emission Rate, lb/ton	ND	1.45E-05	ND
Dimethylnonadiene			
Molecular Weight, g/g-mole	152.2	152.2	152.2
Target Catch, µg	ND	390	ND
Concentration, mg/dscm	ND	3.35	ND
Concentration, ppbvd	ND	530	ND
Emission Rate, lb/test period	ND	1.12E-02	ND
Emission Rate, lb/ton	ND	1.88E-05	ND
Dimethyloctane (RT=20.0)			
Molecular Weight, g/g-mole	142.2	142.2	142.2
Target Catch, µg	ND	454	ND
Concentration, mg/dscm	ND	3.90	ND
Concentration, ppbvd	ND	660	ND
Emission Rate, lb/test period	ND	1.30E-02	ND
Emission Rate, lb/ton	ND	2.18E-05	ND

Summary of Stack Gas Parameters and Test Results
GC/MS Qualitative Characterization of EPA Method 18 Samples
Silo Exhaust Duct
Asphalt Plant C, California

RUN NUMBER	S-M18-1A	S-M18-2A	S-M18-3A
RUN DATE	7/24/98	7/25/98	7/27/98
RUN TIME	0920-1008	0710-0954	1023-1248
Tetradecyloxirane			
Molecular Weight, g/g-mole	240.2	240.2	240.2
Target Catch, µg	ND	219	ND
Concentration, mg/dscm	ND	1.88	ND
Concentration, ppbvd	ND	188	ND
Emission Rate, lb/test period	ND	6.27E-03	ND
Emission Rate, lb/ton	ND	1.05E-05	ND
Decahydro-2-methylnaphthalene (RT=20.9)			
Molecular Weight, g/g-mole	152.2	152.2	152.2
Target Catch, µg	ND	348	404
Concentration, mg/dscm	ND	2.99	8.57
Concentration, ppbvd	ND	473	1355
Emission Rate, lb/test period	ND	9.97E-03	6.18E-03
Emission Rate, lb/ton	ND	1.67E-05	1.31E-05
Bromotridecane			
Molecular Weight, g/g-mole	262.1	262.1	262.1
Target Catch, µg	ND	287	ND
Concentration, mg/dscm	ND	2.47	ND
Concentration, ppbvd	ND	226	ND
Emission Rate, lb/test period	ND	8.22E-03	ND
Emission Rate, lb/ton	ND	1.38E-05	ND
Undecyne			
Molecular Weight, g/g-mole	152.2	152.2	152.2
Target Catch, µg	ND	225	ND
Concentration, mg/dscm	ND	1.93	ND
Concentration, ppbvd	ND	306	ND
Emission Rate, lb/test period	ND	6.44E-03	ND
Emission Rate, lb/ton	ND	1.08E-05	ND
Dodecane			
Molecular Weight, g/g-mole	170.2	170.2	170.2
Target Catch, µg	ND	415	ND
Concentration, mg/dscm	ND	3.57	ND
Concentration, ppbvd	ND	504	ND
Emission Rate, lb/test period	ND	1.19E-02	ND
Emission Rate, lb/ton	ND	2.00E-05	ND

Summary of Stack Gas Parameters and Test Results
GC/MS Qualitative Characterization of EPA Method 18 Samples
Silo Exhaust Duct
Asphalt Plant C, California

RUN NUMBER	S-M18-1A	S-M18-2A	S-M18-3A
RUN DATE	7/24/98	7/25/98	7/27/98
RUN TIME	0920-1008	0710-0954	1023-1248
Trimethylcyclohexane (RT=22.9)			
Molecular Weight, g/g-mole	126.1	126.1	126.1
Target Catch, µg	ND	823	ND
Concentration, mg/dscm	ND	7.07	ND
Concentration, ppbvd	ND	1,349	ND
Emission Rate, lb/test period	ND	2.36E-02	ND
Emission Rate, lb/ton	ND	3.96E-05	ND
Dimethylundecane (RT=23.7)			
Molecular Weight, g/g-mole	184.2	184.2	184.2
Target Catch, µg	ND	501	ND
Concentration, mg/dscm	ND	4.30	ND
Concentration, ppbvd	ND	562	ND
Emission Rate, lb/test period	ND	1.43E-02	ND
Emission Rate, lb/ton	ND	2.41E-05	ND
Dimethylcyclooctane			
Molecular Weight, g/g-mole	140.2	140.2	140.2
Target Catch, µg	ND	185	ND
Concentration, mg/dscm	ND	1.59	ND
Concentration, ppbvd	ND	273	ND
Emission Rate, lb/test period	ND	5.30E-03	ND
Emission Rate, lb/ton	ND	8.90E-06	ND
Cetylpyridinium chloride			
Molecular Weight, g/g-mole	357.0	357.0	357.0
Target Catch, µg	ND	343	ND
Concentration, mg/dscm	ND	2.95	ND
Concentration, ppbvd	ND	199	ND
Emission Rate, lb/test period	ND	9.82E-03	ND
Emission Rate, lb/ton	ND	1.65E-05	ND
Tetramethylheptadecane (RT=25.7)			
Molecular Weight, g/g-mole	296.3	296.3	296.3
Target Catch, µg	ND	399	ND
Concentration, mg/dscm	ND	3.43	ND
Concentration, ppbvd	ND	278	ND
Emission Rate, lb/test period	ND	1.14E-02	ND
Emission Rate, lb/ton	ND	1.92E-05	ND

Summary of Stack Gas Parameters and Test Results
GC/MS Qualitative Characterization of EPA Method 18 Samples
Silo Exhaust Duct
Asphalt Plant C, California

RUN NUMBER	S-M18-1A	S-M18-2A	S-M18-3A
RUN DATE	7/24/98	7/25/98	7/27/98
RUN TIME	0920-1008	0710-0954	1023-1248
Tetradecane (RT=26.0)			
Molecular Weight, g/g-mole	198.2	198.2	198.2
Target Catch, µg	ND	1,411	659
Concentration, mg/dscm	ND	12.1	13.98
Concentration, ppbvd	ND	1,471	1697
Emission Rate, lb/test period	ND	4.04E-02	1.01E-02
Emission Rate, lb/ton	ND	6.79E-05	2.13E-05
Methylnonane (RT=15.9)			
Molecular Weight, g/g-mole	142.2	142.2	142.2
Target Catch, µg	ND	ND	288
Concentration, mg/dscm	ND	ND	6.11
Concentration, ppbvd	ND	ND	1034
Emission Rate, lb/test period	ND	ND	4.41E-03
Emission Rate, lb/ton	ND	ND	9.33E-06
Dimethyloctane			
Molecular Weight, g/g-mole	142.2	142.2	142.2
Target Catch, µg	ND	ND	487
Concentration, mg/dscm	ND	ND	10.33
Concentration, ppbvd	ND	ND	1748
Emission Rate, lb/test period	ND	ND	7.45E-03
Emission Rate, lb/ton	ND	ND	1.58E-05
Dimethyloctene			
Molecular Weight, g/g-mole	140.2	140.2	140.2
Target Catch, µg	ND	ND	370
Concentration, mg/dscm	ND	ND	7.85
Concentration, ppbvd	ND	ND	1347
Emission Rate, lb/test period	ND	ND	5.66E-03
Emission Rate, lb/ton	ND	ND	1.20E-05
2-Ethylhexanal			
Molecular Weight, g/g-mole	126.0	126.0	126.0
Target Catch, µg	ND	ND	215
Concentration, mg/dscm	ND	ND	4.56
Concentration, ppbvd	ND	ND	871
Emission Rate, lb/test period	ND	ND	3.29E-03
Emission Rate, lb/ton	ND	ND	6.96E-06

Summary of Stack Gas Parameters and Test Results
GC/MS Qualitative Characterization of EPA Method 18 Samples
Silo Exhaust Duct
Asphalt Plant C, California

RUN NUMBER	S-M18-1A	S-M18-2A	S-M18-3A
RUN DATE	7/24/98	7/25/98	7/27/98
RUN TIME	0920-1008	0710-0954	1023-1248
Ethylmethylbenzene			
Molecular Weight, g/g-mole	120.1	120.1	120.1
Target Catch, µg	ND	ND	759
Concentration, mg/dscm	ND	ND	16.10
Concentration, ppbvd	ND	ND	3,226
Emission Rate, lb/test period	ND	ND	1.16E-02
Emission Rate, lb/ton	ND	ND	2.46E-05
Methylnonane (RT=18.2)			
Molecular Weight, g/g-mole	142.2	142.2	142.2
Target Catch, µg	ND	ND	455
Concentration, mg/dscm	ND	ND	9.65
Concentration, ppbvd	ND	ND	1633
Emission Rate, lb/test period	ND	ND	6.96E-03
Emission Rate, lb/ton	ND	ND	1.47E-05
Hexadecyne			
Molecular Weight, g/g-mole	222.2	222.2	222.2
Target Catch, µg	ND	ND	982
Concentration, mg/dscm	ND	ND	20.84
Concentration, ppbvd	ND	ND	2256
Emission Rate, lb/test period	ND	ND	1.50E-02
Emission Rate, lb/ton	ND	ND	3.18E-05
Undecene			
Molecular Weight, g/g-mole	154.2	154.2	154.2
Target Catch, µg	ND	ND	326
Concentration, mg/dscm	ND	ND	6.92
Concentration, ppbvd	ND	ND	1079
Emission Rate, lb/test period	ND	ND	4.99E-03
Emission Rate, lb/ton	ND	ND	1.06E-05
Dodecenol			
Molecular Weight, g/g-mole	184.2	184.2	184.2
Target Catch, µg	ND	ND	209
Concentration, mg/dscm	ND	ND	4.43
Concentration, ppbvd	ND	ND	579
Emission Rate, lb/test period	ND	ND	3.20E-03
Emission Rate, lb/ton	ND	ND	6.77E-06

192

Summary of Stack Gas Parameters and Test Results
GC/MS Qualitative Characterization of EPA Method 18 Samples
Silo Exhaust Duct
Asphalt Plant C, California

RUN NUMBER	S-M18-1A	S-M18-2A	S-M18-3A
RUN DATE	7/24/98	7/25/98	7/27/98
RUN TIME	0920-1008	0710-0954	1023-1248
Pentenal			
Molecular Weight, g/g-mole	84.1	84.1	84.1
Target Catch, µg	ND	ND	321
Concentration, mg/dscm	ND	ND	6.81
Concentration, ppbvd	ND	ND	1948
Emission Rate, lb/test period	ND	ND	4.91E-03
Emission Rate, lb/ton	ND	ND	1.04E-05
Methyloctyne			
Molecular Weight, g/g-mole	124.1	124.1	124.1
Target Catch, µg	ND	ND	331
Concentration, mg/dscm	ND	ND	7.02
Concentration, ppbvd	ND	ND	1361
Emission Rate, lb/test period	ND	ND	5.06E-03
Emission Rate, lb/ton	ND	ND	1.07E-05
Decane (RT=19.9)			
Molecular Weight, g/g-mole	142.2	142.2	142.2
Target Catch, µg	ND	ND	619
Concentration, mg/dscm	ND	ND	13.13
Concentration, ppbvd	ND	ND	2222
Emission Rate, lb/test period	ND	ND	9.47E-03
Emission Rate, lb/ton	ND	ND	2.00E-05
Hexyldecanol			
Molecular Weight, g/g-mole	242.3	242.3	242.3
Target Catch, µg	ND	ND	563
Concentration, mg/dscm	ND	ND	11.95
Concentration, ppbvd	ND	ND	1186
Emission Rate, lb/test period	ND	ND	8.61E-03
Emission Rate, lb/ton	ND	ND	1.82E-05
Dimethylheptadecane			
Molecular Weight, g/g-mole	268.3	268.3	268.3
Target Catch, µg	ND	ND	344
Concentration, mg/dscm	ND	ND	7.30
Concentration, ppbvd	ND	ND	654
Emission Rate, lb/test period	ND	ND	5.26E-03
Emission Rate, lb/ton	ND	ND	1.11E-05

Summary of Stack Gas Parameters and Test Results
GC/MS Qualitative Characterization of EPA Method 18 Samples
Silo Exhaust Duct
Asphalt Plant C, California

RUN NUMBER	S-M18-1A	S-M18-2A	S-M18-3A
RUN DATE	7/24/98	7/25/98	7/27/98
RUN TIME	0920-1008	0710-0954	1023-1248
Tetradecene			
Molecular Weight, g/g-mole	196.2	196.2	196.2
Target Catch, µg	ND	ND	231
Concentration, mg/dscm	ND	ND	4.90
Concentration, ppbvd	ND	ND	601
Emission Rate, lb/test period	ND	ND	3.53E-03
Emission Rate, lb/ton	ND	ND	7.48E-06
Teteramethylheptadecane (RT=27.2)			
Molecular Weight, g/g-mole	296.3	296.3	296.3
Target Catch, µg	ND	ND	386
Concentration, mg/dscm	ND	ND	8.19
Concentration, ppbvd	ND	ND	665
Emission Rate, lb/test period	ND	ND	5.91E-03
Emission Rate, lb/ton	ND	ND	1.25E-05
Pentadecane			
Molecular Weight, g/g-mole	212.2	212.2	212.2
Target Catch, µg	ND	ND	2,074
Concentration, mg/dscm	ND	ND	44.0
Concentration, ppbvd	ND	ND	4,989
Emission Rate, lb/test period	ND	ND	3.17E-02
Emission Rate, lb/ton	ND	ND	6.72E-05
Hexadecane			
Molecular Weight, g/g-mole	226.3	226.3	226.3
Target Catch, µg	ND	ND	687
Concentration, mg/dscm	ND	ND	14.58
Concentration, ppbvd	ND	ND	1550
Emission Rate, lb/test period	ND	ND	1.05E-02
Emission Rate, lb/ton	ND	ND	2.23E-05

Note: The Retention Time (RT) is shown after the compound name for TICs that appear more than once and may be isomers.

APPENDIX A.3

EXAMPLE CALCULATIONS

Example Calculations
Asphalt Plant C- California
US EPA Method 315 - PM
(Using Data from Run T-M315-1)

Note: Discrepancies may exist between the computer generated reported results, which use more significant figures, and the values manually calculated from the displayed values.

1. Volume of dry gas sampled corrected to standard conditions of 68°F, 29.92 in. Hg, ft^3.

$$V_{m(std)} = 17.64 V_m \gamma \left(\frac{P_{bar} + \frac{\Delta H}{13.6}}{460 + t_m} \right)$$

$$V_{m(std)} = (17.64)(169.030)(1.001) \left(\frac{29.35 + \frac{1.62}{13.6}}{460 + 86.4} \right)$$

$$V_{m(std)} = 160.986 \text{ dscf}$$

2. Volume of dry gas sampled corrected to standard conditions of 68°F, 29.92 in. Hg, m^3.

$$V_{m(std)m^3} = V_{m(std)}(0.028317)$$

$$V_{m(std)m^3} = (160.986)(0.028317)$$

$$V_{m(std)m^3} = 4.559 \text{ dscm}$$

3. Volume of water vapor at standard conditions, ft^3.

$$V_{w(std)} = 0.04707 V_{1c}$$

$$V_{w(std)} = (0.04707)(124.0)$$

$$V_{w(std)} = 5.837 \text{ scf}$$

4. Moisture content in stack gas, as measured.

$$B_{ws} = \frac{V_{w(std)}}{\left(V_{m(std)} + V_{w(std)}\right)} (100)$$

$$B_{ws} = \frac{5.837}{160.986 + 5.837} (100)$$

$$B_{ws} = 3.5$$

Moisture content in stack gas, at saturation. (Used as B_{ws} if lower than measured moisture)

$$B_{ws(sat)} = 10^{(6.691 - (3144/(ts + 390.86)))} / Ps * 100$$

$$B_{ws(sat)} = 10^{(6.691 - (3144/(85 + 390.86)))} / 29.00 * 100$$

$$B_{ws(sat)} = 4.2$$

5. Dry molecular weight of stack gas, lb/lb-mol.

$$M_d = 0.44(\%CO_2) + 0.32(\%O_2) + 0.28(\%N_2 + \%CO)$$

$$M_d = 0.44(0.0) + 0.32(20.9) + 0.28(79.1 + 0)$$

$$M_d = 28.84 \text{ lb/lb·mol}$$

6. Molecular weight of stack gas, lb/lb-mol.

$$M_s = M_d(1 - B_{ws}/100) + 18(B_{ws}/100)$$

$$M_s = 28.84(1 - 3.5/100) + 18(3.5/100)$$

$$M_s = 28.46 \text{ lb/lb·mol}$$

7. Absolute stack gas pressure, in. Hg.

$$P_s = P_{bar} + \frac{P_{static}}{13.6}$$

$$P_s = 29.35 + \frac{-4.7}{13.6}$$

$$P_s = 29.00 \text{ inches Hg}$$

8. Stack velocity at stack conditions, ft/s.

$$v_s = 85.49\ C_p \left(\sqrt{\Delta p}\right)_{avg} \sqrt{\frac{t_s + 460}{M_s\ P_s}}$$

$$v_s = (85.49)(0.84)(0.5736) \sqrt{\frac{(85.3 + 460)}{(28.46)(29.00)}}$$

$$v_s = 33.5 \text{ ft/s}$$

9. Isokinetic Variation.

$$\%I = \frac{\left(V_{m(std)}\right)\left(t_s + 460\right)(17.32)}{\left(v_s\right)\left(D_n^2\right)(\theta)\left(P_s\right)\left(1 - B_{ws}/100\right)}$$

$$\%I = \frac{(160.986)\ (85.3 + 460)\ (17.32)}{(33.5)\ (0.258)^2\ (240)\ (29.00)\ (1 - 3.5/100)}$$

$$\%I = 101.6$$

10. Stack gas volumetric flow rate at stack conditions, acfm.

$$Q_a = (60)\ (A)\ (v_s)$$

$$Q_a = (60)\ (5.59)\ (33.5)$$

$$Q_a = 11{,}220 \text{ acfm}$$

11. Dry stack gas volumetric flow rate at standard conditions, dscfm.

$$Q_{s(std)} = 17.64\ Q_a \frac{P_s}{(t_s + 460)} \left(1 - B_{ws}/100\right)$$

$$Q_{s(std)} = (17.64)\ (11{,}220) \left(\frac{29.00}{85.3 + 460}\right) (1 - 3.5/100)$$

$$Q_{s(std)} = 10{,}159 \text{ dscfm}$$

12. Dry stack gas volumetric flow rate at standard conditions, dscmm.

$$Q_{s(cmm)} = Q_{s(std)}\ 0.028317$$

$$Q_{s(cmm)} = (10{,}159)\ (0.028317)$$

$$Q_{s(cmm)} = 288 \text{ dscmm}$$

13. PM concentration, gr/dscf.

$$\text{gr/dscf} = (15.43)\ \frac{g}{V_{m(std)}}$$

$$\text{gr/dscf} = (15.43)\ \frac{0.0128}{160.986}$$

$$\text{gr/dscf} = 0.00123 \quad \text{gr/dscf}$$

14. PM concentration, g/dscm.

$$\text{g/dscm} = \frac{g}{V_{m(std)m^3}}$$

$$\text{g/dscm} = \frac{0.0128}{4.559}$$

$$\text{g/dscm} = 0.00281 \quad \text{g/dscm}$$

15. PM emission rate, lb/test period.

$$\text{lb/test period} = \frac{(\theta)\ (g)\ (Q_{s(std)})}{(453.592)\ (V_{m(std)})}$$

$$\text{lb/test period} = \frac{(240)\ (0.0128)\ (10{,}159)}{(453.592)\ (160.986)}$$

$$\text{lb/test period} = 0.427 \quad \text{lb/test period}$$

16. PM Emission Rate, lb/ton.

$$\text{lb/ton} = \frac{\text{lb per test period}}{\text{tons of asphalt loaded per test period}}$$

$$\text{lb/ton} = \frac{0.427}{1{,}875.0}$$

$$\text{lb/ton} = 0.000228 \text{ lb/ton}$$

Nomenclature

γ	Meter Box Correction Factor
ΔH	Avg Meter Orifice Pressure, in. H_2O
P_{bar}	Barometric Pressure, inches Hg
V_m	Sample Volume, ft^3
t_m	Average Meter Temperature, °F
P_{static}	Stack Static Pressure, inches H_2O
t_s	Average Stack Temperature, °F
V_{lc}	Condensate Collected, ml
CO_2	Carbon Dioxide content, % by volume
O_2	Oxygen content, % by volume
N_2	Nitrogen content, % by volume
C_p	Pitot Tube Coefficient
$\Delta p_{1/2}$	Average Square Root Δp, (in. $H_2O)^{1/2}$
Θ	Sample Run Duration, minutes
D_n	Nozzle Diameter, inches
A_n	Nozzle Area, ft^2
$V_{m(std)}$	Standard Meter Volume, dscf
$V_{m(std)m3}$	Standard Meter Volume, dscm
P_s	Stack Pressure, inches Hg
B_{ws}	Moisture, percent by volume
$V_{w(std)}$	Standard Water Vapor Volume, ft^3
$1-B_{ws}$	Dry Mole Fraction
M_d	Molecular Weight, dry, lb/lb•mole
M_s	Molecular Weight, wet, lb/lb•mole
v_s	Stack Gas Velocity, ft/s
A	Stack Area, ft^2
Q_a	Stack Gas Volumetric flow, acfm
$Q_{s(std)}$	Stack Gas Volumetric flow, dscfm
$Q_{s(cmm)}$	Stack Gas Volumetric flow, dscmm
I	Isokinetic Sampling Ratio, %
gr/dscf	Concentration, g/dscf
g/dscm	Concentration, g/dscm
lb/test period	Emission Rate, pounds per test period
lb/ton	Emission Rate, pounds per ton of asphalt loaded

APPENDIX A.4

PARTICULATE DEPOSITION DATA

PM and MCEM Deposition Estimates for the TED and SED at Asphalt Plant C in California

Test Plates				Tunnel Exhaust Duct (TED)								
Plate ID[1]	Surface Area[2], sq ft	PM Catch, grams[3, 13]	MCEM Catch, grams[3, 13]	TED Diameter, ft.	TED Circumference, ft.	TED Length[1], ft.	TED Inside Surface Area[4], ft.	PM Deposition, pounds[11]	MCEM Deposition, pounds[12]	Asphalt Loaded, Tons[5]	PM Deposition, lbs/ton	MCEM Deposition, lbs/ton
Test Plate 1 (T1)	11.167	22.2140	0.8525	-	-	-	-	-	-	-	-	-
Test Plate 2 (T2)	11.167	14.4564	0.0475	-	-	-	-	-	-	-	-	-
Test Plate 3 (T3)	11.167	16.1247	0.3097	-	-	-	-	-	-	-	-	-
	33.500	52.7951	1.2097	2.667	8.373	72.460	606.732	2.11	0.05	75,347	2.80E-05	6.40E-07

SED Sample Area				Silo No. 2 Exhaust Duct (SED) - Upstream of Sampling Location								
Sample ID[6]	Surface Area[7], sq ft	PM Catch, grams[3]	MCEM Catch, grams[3]	SED Diameter, ft.	SED Circumference, ft.	SED Length[8], ft.	SED Inside Surface Area, ft.	PM Deposition, pounds[11]	MCEM Deposition, pounds[12]	Asphalt Loaded, Tons[9, 10]	PM Deposition, lbs/ton	MCEM Deposition, lbs/ton
New SED	6.54	188.0179	2.9505	0.833	2.617	3.500	9.158	0.58	0.01	8,142	7.12E-05	1.12E-06
Old SED	2.62	98.5125	7.2225	0.833	2.617	3.500	9.158	0.76	0.06	600,000	1.27E-06	9.28E-08

Notes:

1. See Figure 1; note for the calculations the three plates were essentially treated as one large plate
2. Test plate dimension; 2.667 feet by 4.187 feet
3. PM - Particulate Matter, MCEM - Methylene Chloride Extractable Matter; Catch determined using EPA Method 315 analytical procedures
4. TED dimensions; 53.792 feet long by 8.373 feet circumference plus four times 4.667 feet long by 8.373 circumference
5. Test plates were in place from June 28, 1998 through July 26, 1998; tons shown is an estimate of the load-out tons from Silos 3, 4, and 5 while plates were in place
6. New SED was installed on July 19, 1998 and cleaned on July 26, 1998; Old SED was section of original SED in place from Plant C start-up through July 19, 1998
7. New SED sample suface area was 2.5 feet long by 2.617 circumference; Old SED sample area was 1 foot long by 2.617 circumference
8. SED length upstream of sampling location; equal to 2.5' plus 0.5' plus 0.5' (see page 4-4)
9. It was assumed that one fifth of the total tons loaded from July 23 to 26, 1998 were loaded from Silo No. 2.
10. Old SED was in place from start-up; Plant C produced approximatley 3,000,000 tons since start-up; It was assumed that one fifth of tons was loaded into Silo No. 2
11. Calculated by multiplying the PM catch by the ratio of surface areas
12. Calculated by multiplying the MCEM catch by the ratio of surface areas
13. There is no clear explanation for the variation in the PM and MCEM catches for T1, T2 and T3.

207

PM and MCEM Deposition for the Silo No. 2 Exhaust Plenum at Plant C - All Data									
Box Pipes				Silo No. 2 Exhaust Plenum					
Box Pipe ID	Surface Area,[1] sq ft	PM Catch, grams[2]	MCEM Catch, grams[2]	Plenum Surface Area[3], sq ft	PM Deposition, pounds[4]	MCEM Deposition, pounds[5]	Asphalt Loaded, Tons[6,7]	PM Deposition, lbs/ton	MCEM Deposition, lbs/ton
West North (WN)	0.8333	0.2178	0.0042	-	-	-	-	-	-
West Center (WC)	0.8333	0.1305	0.0012	-	-	-	-	-	-
West South (WS)	0.8333	1.0095	0.0121	-	-	-	-	-	-
East North (EN)	0.8333	0.1282	0.0215	-	-	-	-	-	-
East Center (EC)	0.8333	0.1201	0.0059	-	-	-	-	-	-
East South (ES)	0.8333	2.4825	0.0808	-	-	-	-	-	-
-	5.000	4.0886	0.1257	158.948	0.2863	0.0088	4,133	6.93E-05	2.13E-06

PM and MCEM Deposition for the Silo No. 2 Exhaust Plenum at Plant C - Excluding Contaminated Box Pipe [8]									
Box Pipes				Silo No. 2 Exhaust Plenum					
Box Pipe ID	Surface Area,[1] sq ft	PM Catch, grams[2]	MCEM Catch, grams[2]	Plenum Surface Area[3], sq ft	PM Deposition, pounds[4]	MCEM Deposition, pounds[5]	Asphalt Loaded, Tons[6,7]	PM Deposition, lbs/ton	MCEM Deposition, lbs/ton
West North (WN)	0.8333	0.2178	0.0042	-	-	-	-	-	-
West Center (WC)	0.8333	0.1305	0.0012	-	-	-	-	-	-
West South (WS)	-	-	-	-	-	-	-	-	-
East North (EN)	0.8333	0.1282	0.0215	-	-	-	-	-	-
East Center (EC)	0.8333	0.1201	0.0059	-	-	-	-	-	-
East South (ES)	-	-	-	-	-	-	-	-	-
-	3.333	0.5966	0.0328	158.948	0.0627	0.0034	4,133	1.52E-05	8.34E-07

Notes:

1. Six pieces of box pipe, 6 in. long by 3 in. OD and 2.75 in. ID were installed in Silo No. 2 exhaust plenum (note:outside bottom sides were not exposed to fumes)
2. PM - Particulate Matter, MCEM - Methylene Chloride Extractable Matter; Catch determined using EPA Method 315 analytical procedures
3. Exhaust Plenum was divided into 10 sections for calculating the inside surface area
4. Calculated by multiplying the PM catch by the ratio of surface areas
5. Calculated by multiplying the MCEM catch by the ratio of surface areas
6. Box pipes were installed in Silo No. 2 exhaust plenum on July 23, 1998 and removed on July 26, 1998
7. It was assumed that one fifth of the total tons loaded from July 23 to 26, 1998 were loaded from Silo No. 2.
8. WS and ES appeared contaminated with extraneous material when removed on July 26, 1998; data excludes WS and ES from the calculation.

PM and MCEM Deposition Estimates for the Tunnel Ceiling Downstream of Silo No. 5 at Asphalt Plant C in California

Ceiling Plates				Tunnel Ceiling Downstream of Silo No. 5									
Plate ID[1]	Surface Area[2], sq ft	PM Catch, grams[3]	MCEM Catch, grams[3]	Ceiling Section ID	Length, feet	Corrugated Length Correction[4]	Width, feet	Surface Area, sq ft	PM Deposition, pounds[6]	MCEM Deposition, pounds[7]	Asphalt Loaded, Tons[5]	PM Deposition, lbs/ton	MCEM Deposition, lbs/ton
CPW	0.1576	0.0299	0.0087	West	19.17	1.217	17.5	408.27	0.17	0.05	20,666	8.26E-06	2.40E-06
CPC	0.1576	0.0580	0.0132	Center	19.00	1.217	17.5	404.65	0.33	0.07	20,666	1.59E-05	3.61E-06
CPE	0.1576	0.1420	0.0009	East	19.00	1.217	17.5	404.65	0.80	0.01	20,666	3.89E-05	2.46E-07
												6.30E-05	6.26E-06

Notes:

1. CPW - Ceiling Plate West section, CPC - Ceiling Plate Center section, CPE - Ceiling Plate East section
2. Ceiling plate dimensions: 2.0625 inches by 11.0 inches
3. PM - Particulate Matter, MCEM - Methylene Chloride Extractable Matter; Catch determined using EPA Method 315 analytical procedures
4. The ceiling was made of corrugated metal, correction takes into account the additional surface area, (i.e., linear length of 2.979 ft vs. total length of 3.625 ft)
5. Ceiling plates were installed on July 23, 1998 and removed on July 26, 1998; tons shown are total load-out tons while plates were in place
6. Calculated by multiplying the PM catch by the ratio of surface areas
7. Calculated by multiplying the MCEM catch by the ratio of surface areas

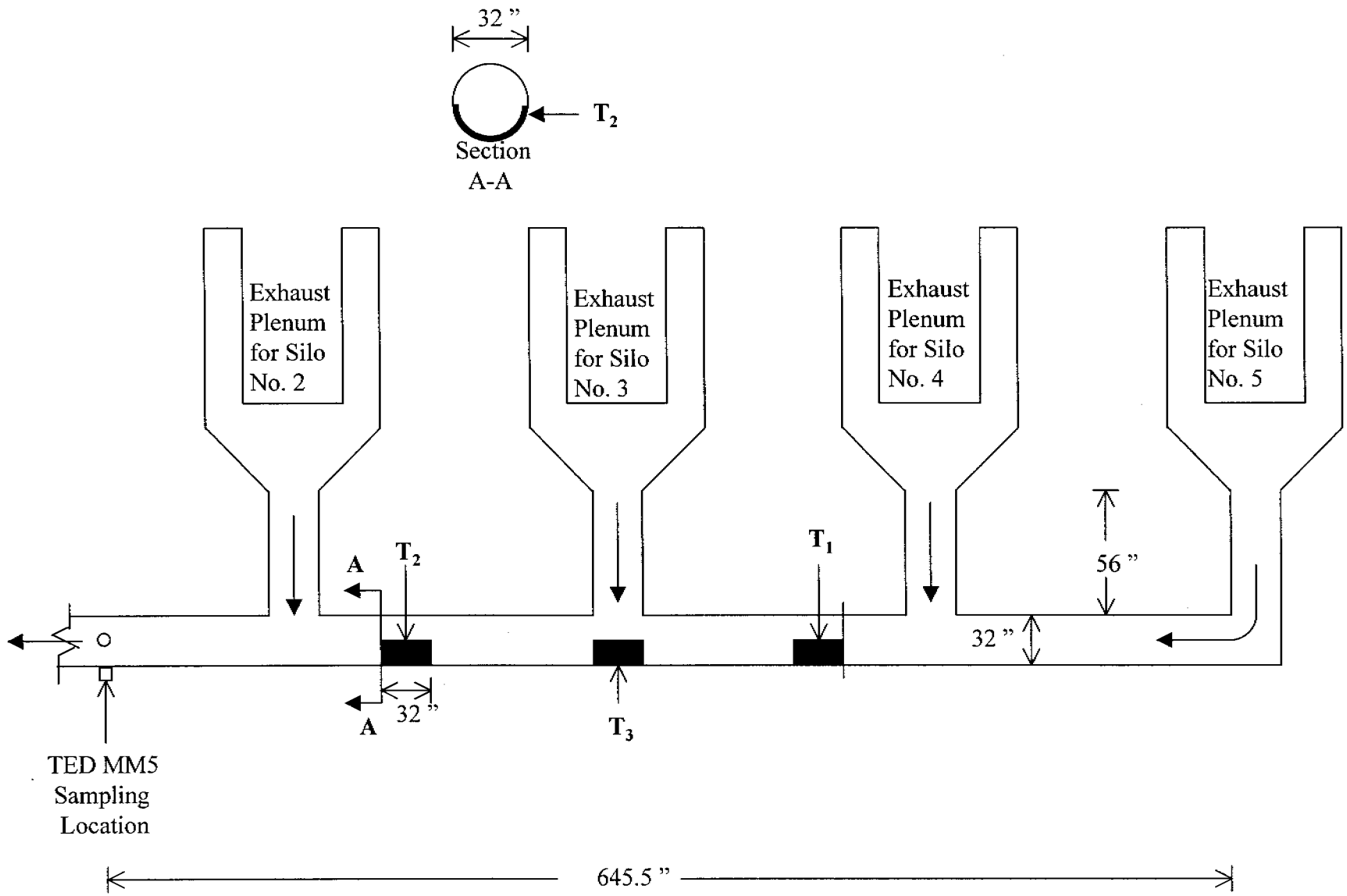

Figure 1 Location of TED Deposition Test Plates T_1,T_2, and T_3

APPENDIX A.5

CAPTURE EFFICIENCY CALCULATIONS

TED LOAD-OUT EMISSIONS BY COMPOUND; PM, MCEM & PAHs - ASPHALT PLANT C, CALIFORNIA

	R1 Loading				R2 Loading				R3 Loading				R1-R3 Average				Background	
Asphalt Loss on Heating (RTFOT)	-0.362				-0.322				-0.284				-0.323					
Load out Temperature (F)	321				316				291				309					
90% Lower Confidence Limit Capture Efficiency	0.64				0.65				0.54				0.61				0.45	
	As Measured		Corrected For CE%		As Measured		Corrected For CE%		As Measured		Corrected For CE%		As Measured		Corrected For CE%		As Mea	Cor CE%
	gr/dscf	#/ton	gr/dscf	#/ton	gr/dscf	#/ton	gr/dscf	#/ton	gr/dscf	#/ton	gr/dscf	#/ton	gr/dscf	#/ton	gr/dscf	#/ton	gr/dscf	gr/dscf
PM	1.2270E-03	2.2794E-04	1.92E-03	3.56E-04	7.3875E-04	1.7229E-04	1.14E-03	2.65E-04	8.5904E-04	1.1077E-04	1.59E-03	2.05E-04	9.42E-04	1.70E-04	1.55E-03	2.75E-04	7.93E-04	1.76E-03
MCEM	1.0737E-03	1.9945E-04	1.68E-03	3.12E-04	2.2731E-04	5.3011E-05	3.50E-04	8.16E-05	2.7287E-04	3.5184E-05	5.05E-04	6.52E-05	5.25E-04	9.59E-05	8.44E-04	1.53E-04	3.78E-04	8.40E-04
PAH	ppbvd	#/ton	ppbvd	#/ton	ppbvd	#/ton	ppbvd	#/ton					ppbvd	#/ton	ppbvd	#/ton	ppbvd	ppbvd
Acenaphthene	1.6298E-01	1.0231E-07	2.55E-01	1.60E-07	1.7707E-01	6.7037E-08	2.72E-01	1.03E-07					1.70E-01	8.47E-08	2.64E-01	1.31E-07	1.79E-02	3.97E-02
Acenaphthylene	1.7023E-02	1.0686E-08	2.66E-02	1.67E-08	2.0894E-02	7.9104E-09	3.21E-02	1.22E-08					1.90E-02	9.30E-09	2.94E-02	1.44E-08	2.60E-03	5.78E-03
Anthracene	5.3276E-02	3.8651E-08	8.32E-02	6.04E-08	3.3708E-02	1.4748E-08	5.19E-02	2.27E-08					4.35E-02	2.67E-08	6.76E-02	4.15E-08	6.19E-03	1.38E-02
Benzo(a)anthracene	9.0523E-03	8.4122E-09	1.41E-02	1.31E-08	7.4159E-03	4.1563E-09	1.14E-02	6.39E-09					8.23E-03	6.28E-09	1.28E-02	9.77E-09	3.29E-04	7.32E-04
Benzo(b)fluoranthene	3.5417E-03	3.6377E-09	5.53E-03	5.68E-09	2.8137E-03	1.7430E-09	4.33E-03	2.68E-09					3.18E-03	2.69E-09	4.93E-03	4.18E-09	3.58E-04	7.95E-04
Benzo(k)fluoranthene	1.0404E-03	1.0686E-09	1.63E-03	1.67E-09	7.3590E-04	4.5585E-10	1.13E-03	7.01E-10					8.88E-04	7.62E-10	1.38E-03	1.19E-09	ND	ND
Benzo(g,h,i)perylene	8.8931E-04	1.0004E-09	1.39E-03	1.56E-09	6.5217E-04	4.4244E-10	1.00E-03	6.81E-10					7.71E-04	7.21E-10	1.20E-03	1.12E-09	1.36E-04	3.02E-04
Benzo(a)pyrene	1.0626E-03	1.0913E-09	1.66E-03	1.71E-09	7.5760E-04	4.6926E-10	1.17E-03	7.22E-10					9.10E-04	7.80E-10	1.41E-03	1.21E-09	ND	ND
Benzo(e)pyrene	3.9847E-03	4.0924E-09	6.23E-03	6.39E-09	2.5975E-03	1.6089E-09	4.00E-03	2.48E-09					3.29E-03	2.85E-09	5.11E-03	4.43E-09	2.58E-04	5.74E-04
Chrysene	5.1380E-02	4.7745E-08	8.03E-02	7.46E-08	4.5455E-02	2.5474E-08	6.99E-02	3.92E-08					4.84E-02	3.66E-08	7.51E-02	5.69E-08	6.81E-03	1.51E-02
Dibenz(a,h)anthracene	3.2107E-04	3.6377E-10	5.02E-04	5.68E-10	ND	ND	ND	ND					1.61E-04	1.82E-10	2.51E-04	2.84E-10	ND	ND
Fluoranthene	3.3137E-02	2.7283E-08	5.18E-02	4.26E-08	2.5111E-02	1.2469E-08	3.86E-02	1.92E-08					2.91E-02	1.99E-08	4.52E-02	3.09E-08	7.44E-03	1.65E-02
Fluorene	7.0567E-01	4.7745E-07	1.10E+00	7.46E-07	3.2200E-01	1.3139E-07	4.95E-01	2.02E-07					5.14E-01	3.04E-07	7.99E-01	4.74E-07	4.83E-02	1.07E-01
Indeno(1,2,3-cd)pyrene	3.8474E-04	4.5471E-10	6.01E-04	7.10E-10	ND	ND	ND	ND					1.92E-04	2.27E-10	3.01E-04	3.55E-10	ND	ND
2-Methylnaphthalene	1.4925E+00	8.6396E-07	2.33E+00	1.35E-06	1.8051E+00	6.3015E-07	2.78E+00	9.69E-07					1.65E+00	7.47E-07	2.55E+00	1.16E-06	9.17E-02	2.04E-01
Naphthalene	8.2803E-01	4.3198E-07	1.29E+00	6.75E-07	1.0227E+00	3.2178E-07	1.57E+00	4.95E-07					9.25E-01	3.77E-07	1.43E+00	5.85E-07	ND	ND
Perylene	1.1733E-02	1.2050E-08	1.83E-02	1.88E-08	6.0608E-03	3.7541E-09	9.32E-03	5.78E-09					8.90E-03	7.90E-09	1.38E-02	1.23E-08	ND	ND
Phenanthrene	6.5812E-01	4.7745E-07	1.03E+00	7.46E-07	3.9836E-01	1.7430E-07	6.13E-01	2.68E-07					5.28E-01	3.26E-07	8.21E-01	5.07E-07	1.13E-01	2.50E-01
Pyrene	8.8374E-02	7.2754E-08	1.38E-01	1.14E-07	7.2910E-02	3.6200E-08	1.12E-01	5.57E-08					8.06E-02	5.45E-08	1.25E-01	8.47E-08	1.49E-02	3.31E-02

TED LOAD-OUT EMISSIONS BY COMPOUND; VOHAPS - ASPHALT PLANT C, CALIFORNIA

	R1 Loading				R2 Loading				R3 Loading				R1-R3 Average				Background	
Asphalt Loss on Heating (RTFOT)	-0.362				-0.322				-0.284				-0.323					
Load out Temperature (F)	321				316				291				309					
90% LCL Capture Efficiency	0.64				0.65				0.54				0.61				0.45	
	As Measured		Corrected For CE%		As Measured		Corrected For CE%		As Measured		Corrected For CE%		As Measured		Corrected For CE%		As Mea	Corr CE%
VOHAPS	ppb	#/ton	ppb	#/ton	ppb	#/ton	ppb	#/ton	ppb	#/ton	ppb	#/ton	ppb	#/ton	ppb	#/ton	ppb	ppb
Acetone	8.1774E+00	1.6089E-06	1.28E+01	2.51E-06	4.3003E+00	1.0933E-06	6.62E+00	1.68E-06	1.2449E+00	1.9292E-07	2.31E+00	3.57E-07	4.57E+00	9.65E-07	7.23E+00	1.52E-06	2.00E+00	4.43E+00
Benzene (M 0030)	4.3656E+00	1.1551E-06	6.82E+00	1.80E-06	2.8510E+00	9.7480E-07	4.39E+00	1.50E-06	1.8008E+00	3.7531E-07	3.33E+00	6.95E-07	3.01E+00	8.35E-07	4.85E+00	1.33E-06	1.07E+00	2.37E+00
Benzene (M 18)	ND	ND	ND	ND	6.8605E+00	2.1508E-06	1.06E+01	3.31E-06	ND	ND	ND	ND	2.29E+00	7.17E-07	3.52E+00	1.10E-06	ND	ND
Benzene (Average)	-	-	-	-	-	-	-	-	-	-	-	-	2.65E+00	7.76E-07	4.18E+00	1.22E-06	5.34E-01	1.19E+00
Bromomethane	1.1716E+00	3.7684E-07	1.83E+00	5.89E-07	3.2497E-01	1.3507E-07	5.00E-01	2.08E-07	2.0806E-02	5.2711E-09	3.85E-02	9.76E-09	5.06E-01	1.72E-07	7.90E-01	2.69E-07	9.15E-02	2.03E-01
2-Butanone	3.5896E+00	8.7673E-07	5.61E+00	1.37E-06	3.2905E+00	1.0385E-06	5.06E+00	1.60E-06	9.0970E-01	1.7500E-07	1.68E+00	3.24E-07	2.60E+00	6.97E-07	4.12E+00	1.10E-06	2.67E-01	ND
Carbon Disulfide	2.9817E-01	7.6906E-08	4.66E-01	1.20E-07	1.0208E+00	3.4023E-07	1.57E+00	5.23E-07	2.6984E-01	5.4820E-08	5.00E-01	1.02E-07	5.30E-01	1.57E-07	8.45E-01	2.48E-07	ND	ND
Chloroethane	4.9262E-02	1.0767E-08	7.70E-02	1.68E-08	ND	ND	ND	ND	ND	ND	ND	ND	1.64E-02	3.59E-09	2.57E-02	5.61E-09	ND	ND
Chloroform	ND	ND	ND	ND	ND	ND	ND	ND	ND	ND	ND	ND	ND	ND	ND	ND	1.90E-02	4.22E-02
Chloromethane	2.1403E+00	3.6607E-07	3.34E+00	5.72E-07	1.3261E+00	2.9308E-07	2.04E+00	4.51E-07	5.7127E-01	7.6959E-08	1.06E+00	1.43E-07	1.35E+00	2.45E-07	2.15E+00	3.88E-07	3.74E-01	8.31E-01
Cumene (M 0030)	ND	ND	ND	ND	ND	ND	ND	ND	ND	ND	ND	ND	ND	ND	ND	ND	ND	ND
Cumene (M 18)	1.3897E+01	5.7779E-06	2.17E+01	9.03E-06	9.8210E+00	4.7376E-06	1.51E+01	7.29E-06	ND	ND			7.91E+00	3.51E-06	1.84E+01	8.16E-06	ND	ND
Cumene (Average)	-	-	-	-	-	-	-	-	-	-	-	-	3.95E+00	1.75E-06	9.21E+00	4.08E-06	ND	ND
Ethylbenzene (M 0030)	1.5825E+00	5.6910E-07	2.47E+00	8.89E-07	4.4147E-01	2.0515E-07	6.79E-01	3.16E-07	7.8532E-01	2.2244E-07	1.45E+00	4.12E-07	9.36E-01	3.32E-07	1.54E+00	5.39E-07	1.46E-01	3.24E-01
Ethylbenzene (M 18)	3.2151E+01	1.1807E-05	5.02E+01	1.84E-05	4.0441E+01	1.7231E-05	6.22E+01	2.65E-05	1.2082E+01	3.1488E-06	2.24E+01	5.83E-06	2.82E+01	1.07E-05	4.49E+01	1.69E-05	1.55E+01	3.43E+01
Ethylbenzene (Average)	-	-	-	-	-	-	-	-	-	-	-	-	1.46E+01	5.53E-06	2.32E+01	8.73E-06	7.80E+00	1.73E+01
n-Hexane (M 0030)	2.0445E+00	5.9679E-07	3.19E+00	9.32E-07	2.2634E+00	8.5375E-07	3.48E+00	1.31E-06	1.7608E+00	4.0482E-07	3.26E+00	7.50E-07	2.02E+00	6.18E-07	3.31E+00	9.99E-07	3.90E-01	8.67E-01
Hexane (M 18)	1.1799E+01	3.5170E-06	1.84E+01	5.50E-06	2.2305E+01	7.7143E-06	3.43E+01	1.19E-05	ND	ND	ND	ND	1.14E+01	3.74E-06	1.76E+01	5.79E-06	ND	ND
Hexane (Average)	-	-	-	-	-	-	-	-	-	-	-	-	6.70E+00	2.18E-06	1.04E+01	3.39E-06	1.95E-01	4.33E-01
Isooctane	ND	ND	ND	ND	2.1663E-01	1.0831E-07	3.33E-01	1.67E-07	4.1511E-02	1.2651E-08	7.69E-02	2.34E-08	8.60E-02	4.03E-08	1.37E-01	6.34E-08	1.06E-01	2.35E-01
Methylene Chloride	4.6293E+00	1.3320E-06	7.23E+00	2.08E-06	2.1694E+00	8.0660E-07	3.34E+00	1.24E-06	6.4426E+00	1.4601E-06	1.19E+01	2.70E-06	4.41E+00	1.20E-06	7.50E+00	2.01E-06	1.21E+01	2.68E+01
MTBE	9.7868E-02	2.9224E-08	1.53E-01	4.57E-08	4.2930E-01	1.6565E-07	6.60E-01	2.55E-07	2.9135E-01	6.8525E-08	5.40E-01	1.27E-07	2.73E-01	8.78E-08	4.51E-01	1.42E-07	7.07E-01	1.57E+00
Styrene	ND	ND	ND	ND	2.9909E-01	1.3634E-07	4.60E-01	2.10E-07	3.8700E-01	1.0753E-07	7.17E-01	1.99E-07	2.29E-01	8.13E-08	3.92E-01	1.36E-07	1.45E-01	3.22E-01
Tetrachloroethene	2.5187E-01	1.4151E-07	3.94E-01	2.21E-07	2.0711E-01	1.5036E-07	3.19E-01	2.31E-07	1.5724E-01	6.9579E-08	2.91E-01	1.29E-07	2.05E-01	1.20E-07	3.34E-01	1.94E-07	8.65E-02	1.92E-01
Toluene (M 0030)	6.2887E+00	1.9626E-06	9.83E+00	3.07E-06	2.3413E+00	9.4422E-07	3.60E+00	1.45E-06	2.6976E+00	6.6311E-07	5.00E+00	1.23E-06	3.78E+00	1.19E-06	6.14E+00	1.92E-06	1.33E+00	2.95E+00
Toluene (M 18)	1.7116E+01	5.4549E-06	2.67E+01	8.52E-06	2.9139E+01	1.0775E-05	4.48E+01	1.66E-05	1.1431E+01	2.5856E-06	2.12E+01	4.79E-06	1.92E+01	6.27E-06	3.09E+01	9.96E-06	1.05E+01	2.33E+01
Toluene (Average)	-	-	-	-	-	-	-	-	-	-	-	-	1.15E+01	3.73E-06	1.85E+01	5.94E-06	5.90E+00	1.31E+01
1,1,1-Trichloroethane	ND	ND	ND	ND	ND	ND	ND	ND	ND	ND	ND	ND	ND	ND	ND	ND	3.40E-02	7.55E-02
Trichloroethene	ND	ND	ND	ND	ND	ND	ND	ND	ND	ND	ND	ND	ND	ND	ND	ND	2.87E-03	6.39E-03
Trichlorofluoromethane	5.6187E-02	2.6148E-08	8.78E-02	4.09E-08	7.2043E-02	4.3325E-08	1.11E-01	6.67E-08	8.0530E-02	2.9518E-08	1.49E-01	5.47E-08	6.96E-02	3.30E-08	1.16E-01	5.41E-08	7.42E-02	1.65E-01
m-/p-Xylene (M 0030)	9.2214E+00	3.3162E-06	1.44E+01	5.18E-06	2.4953E+00	1.1596E-06	3.84E+00	1.78E-06	3.8224E+00	1.0827E-06	7.08E+00	2.01E-06	5.18E+00	1.85E-06	8.44E+00	2.99E-06	4.09E-01	9.09E-01
m-Xylene (M 18)	6.9676E+00	2.5588E-06	1.09E+01	4.00E-06	6.7599E+00	2.8803E-06	1.04E+01	4.43E-06	ND	ND	ND	ND	4.58E+00	1.81E-06	7.10E+00	2.81E-06	ND	ND
p-Xylene (M 18)	2.0815E+01	7.6441E-06	3.25E+01	1.19E-05	1.3185E+01	5.6180E-06	2.03E+01	8.64E-06	ND	ND	ND	ND	1.13E+01	4.42E-06	1.76E+01	6.86E-06	ND	ND
m-/p-Xylene (Average)	-	-	-	-	-	-	-	-	-	-	-	-	7.03E+00	2.70E-06	1.10E+01	4.22E-06	1.36E-01	3.03E-01
o-Xylene (M 0030)	2.8528E+00	1.0259E-06	4.46E+00	1.60E-06	7.1568E-01	3.3258E-07	1.10E+00	5.12E-07	1.3883E+00	3.9323E-07	2.57E+00	7.28E-07	1.65E+00	5.84E-07	2.71E+00	9.48E-07	1.74E-01	3.87E-01
o-Xylene (M 18)	7.7983E+00	2.8638E-06	1.22E+01	4.47E-06	5.5693E+00	2.3730E-06	8.57E+00	3.65E-06	ND	ND	ND	ND	4.46E+00	1.75E-06	6.92E+00	2.71E-06	ND	ND
o-Xylene (Average)	-	-	-	-	-	-	-	-	-	-	-	-	3.05E+00	1.16E-06	4.81E+00	1.83E-06	8.71E-02	1.94E-01

From: **Scott Klamm <sklamm@mriresearch.org>**
Send reply to: **"sklamm@mriresearch.org" <sklamm@mriresearch.org>**
To: **"'MYERS.RON@epamail.epa.gov'" <MYERS.RON@epamail.epa.gov>**
Copies to: **"'TONEY.MIKE@epamail.epa.gov'" <TONEY.MIKE@epamail.epa.gov>, "'frank.phoenix@pes.com'" <frank.phoenix@pes.com>**
Subject: **CE calcs**
Date sent: **Thu, 10 Feb 2000 13:45:15 -0600**
Organization: **MRI**

Ron,

Here are the revised capture efficiency (CE) numbers for Plant C. These numbers reflect the final flowrates from PES, rather than the original data set, which used some preliminary flowrates.

Run 1 = 64%
Run 2 = 65%
Run 3 = 54%
Run 4 = 45%

The revised capture numbers were determined using the Lower Confidence Limit approach at the 90% level. Capture data from each test run was broken into 7-10 approximately equal time intervals of greater than 20 minutes each. The exact number of individual time intervals for each run was dependent upon the raw data and timing of SF6 data collection within the run. Similarly, not every individual time interval was the exact same length, and actual time intervals varied from 21 to 27 minutes in length, depending upon the data available for each run.

Note that Runs 1 and 2 now have nearly identical CE numbers, with Run 2 even being slightly higher. This is contradictory to the CE data presented in the draft report, where we saw a steady decrease with each succeeding test run. A close examination of the data shows that the new trend makes sense, however, since we are now using the LCL calculation, rather than the overall average for the test run. Run 1 had the highest overall average, but also had large variations, thereby dropping the LCL value by quite a bit. Run 2, on the other hand, showed greater precision, and thus the LCL value is not too much different from the overall average. Runs 3 and 4 fall into place as one would expect.

For the record, approximately 7 minutes of SF6 data from Run 1 was not used for any of the CE calculations. This data was collected during two separate time intervals less than the required 20 minutes, and the method does not allow them to be included. The average capture efficiency for these 7 minutes of data was calculated to be 80%. Thus, we can conclude that dropping these data points creates a low bias to the overall CE calculation for Run 1, and represents a conservative adjustment of the data (beyond the LCL calculation).

I will be correcting Table 3-9 in MRI's Plant C report to reflect the revised CE determinations. Summary tables of CE calculations for each test run will be included in the Appendix, along with a detailed listing of the exact time intervals used for the data subsets. The

213

appendix data will allow the reader to reconstruct a CE for any individual time interval during a run in approximately 21-27 minute intervals. If any of you need to see this data prior to the final report, please call me and I will make copies available.

If there are other questions or comments related to the CE determinations, please let me know.

Scott Klamm
Environmental Engineer
Midwest Research Institute

TECHNICAL REPORT DATA

Please read instructions on the reverse before completing

1. REPORT NO. EPA-454/R-00-025A	2.	3. RECIPIENT'S ACCESSION NO.
4. TITLE AND SUBTITLE Final Report Hot Mix Asphalt Plants, Truck Loading and Silo Filling, Manual Methods Testing, Asphalt Plant C, Los Angeles, California Volume 1 of 8		5. REPORT DATE May 2000 6. PERFORMING ORGANIZATION CODE
7. AUTHOR(S) Frank J. Phoenix		8. PERFORMING ORGANIZATION REPORT NO.
9. PERFORMING ORGANIZATION NAME AND ADDRESS Pacific Environmental Services, Inc. Post Office Box 12077 Research Triangle Park, North Carolina 27709-2077		10. PROGRAM ELEMENT NO. 11. CONTRACT/GRANT NO. 68-D-98004
12. SPONSORING AGENCY NAME AND ADDRESS U.S. Environmental Protection Agency Office of Air Quality Planning and Standards Emissions, Monitoring and Analysis Division Research Triangle Park, North Carolina 27711		13. TYPE OF REPORT AND PERIOD COVERED Final 14. SPONSORING AGENCY CODE EPA/200/04

15. SUPPLEMENTARY NOTES

16. ABSTRACT

The United States Environmental Protection Agency (EPA) Office of Air Quality Planning and Standards (OAQPS) is investigating hot mix asphalt plants to identify and quantify particulate matter (PM), methylene chloride extractable matter (MCEM), and organic hazardous air pollutant (HAP) emissions during asphalt concrete loading operations. In support of this investigation, the OAQPS issued Pacific Environmental Services, Inc. (PES) a series of work assignments to conduct emissions testing at a hot mix asphalt plant during load-out operations.

The primary objective of the emissions testing was to characterize the uncontrolled emissions of PM, MCEM, polynuclear aromatic hydrocarbons (PAHs), semi-volatile organic hazardous air pollutants (SVOHAPS), and volatile organic hazardous air pollutants (VOHAPS) from a hox mix production plant during loading operations. An asphalt plant south of Los Angeles, California was selected by EPA as the host facility. Testing was performed over five consecutive days beginning on July 24, 1998. Testing was performed under two conditions. Under normal operations, testing was performed to characterize load-out emissions from the tunnel exhaust and load-in emissions from the asphalt concrete storage silo. Under background conditions, testing was performed to characterize emissions from the combustion of diesel fuel in transport trucks.

The entire report consists of eight volumes totaling 4,234 pages, Vol.1 (388 pages), Vol. 2 (308 pages), Vol. 3 (573 pages), Vol. 4 (694 pages), Vol. 5 (606 pages), Vol. 6 (564 pages), Vol. 7 (570 pages), and Vol. 8 (531 pages).

17. KEY WORDS AND DOCUMENT ANALYSIS

a. DESCRIPTIONS	b. IDENTIFIERS/OPEN ENDED TERMS	c. COASTI Field/Group
Hazardous Air Pollutants Methylene Chloride Extractable Matter Particulate Matter Polynuclear Aromatic Hydrocarbons Semi-volatile Organic Hazardous Air Pollutants Volatile Organic Hazardous Air Pollutants		

18. DISTRIBUTION STATEMENT Unlimited	19. SECURITY CLASS *(This Report)* Unclassified 20. SECURITY CLASS *(This page)* Unclassified	21. NO. OF PAGES Vol. 1 - 388 22. PRICE