United States
Environmental Protection
Agency

Office of Air Quality
Planning And Standards
Research Triangle Park, NC 27711

EPA-450/4-91-012
March 1991

AIR

EPA

LOCATING AND ESTIMATING AIR EMISSIONS FROM SOURCES OF FORMALDEHYDE (REVISED)

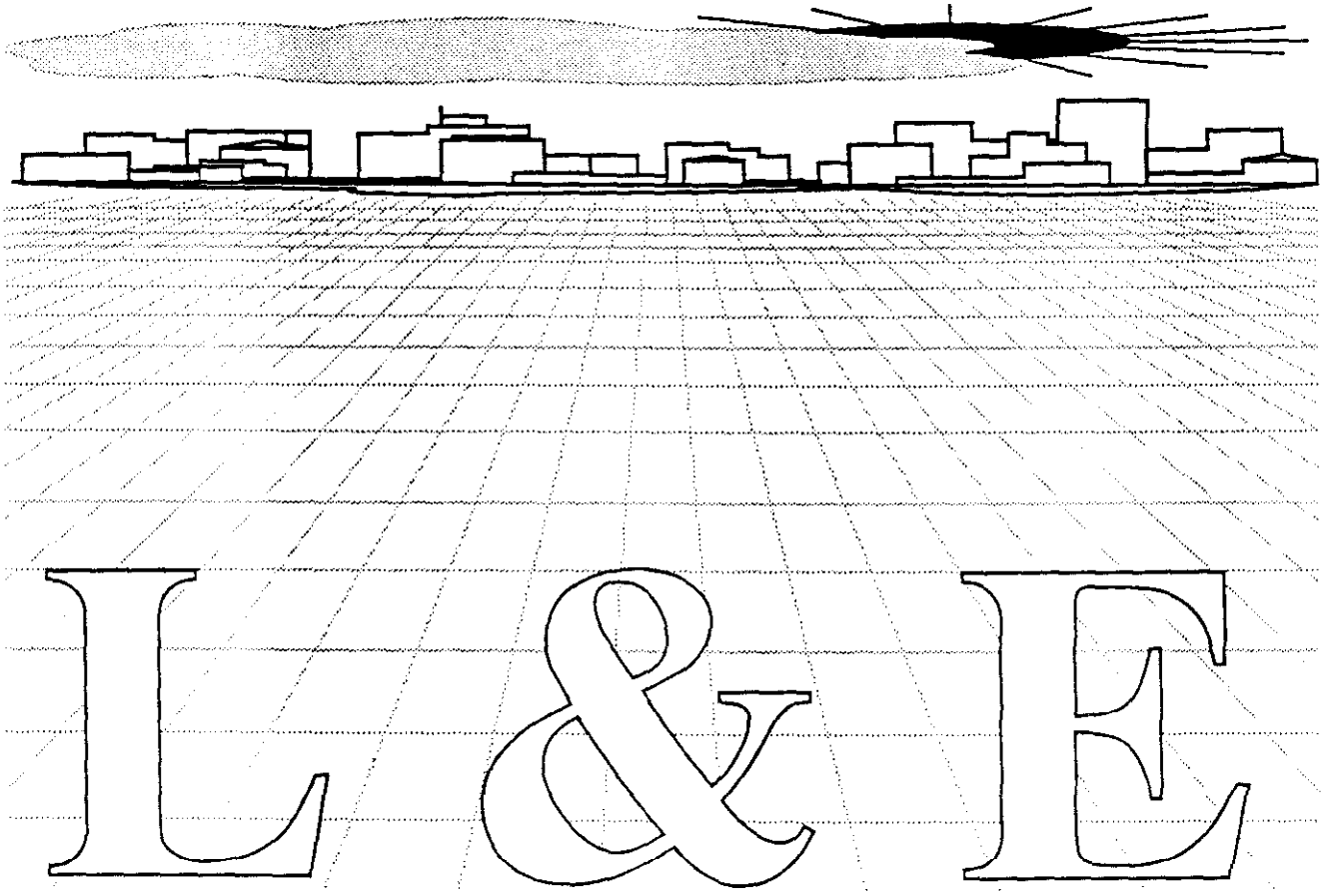

EPA-450/4-91-012

LOCATING AND ESTIMATING AIR EMISSIONS FROM SOURCES OF FORMALDEHYDE (REVISED)

By

Emission Inventory Branch
Technical Support Division

EPA Project Officer: Dallas Safriet

U. S. Environmental Protection Agency
Office of Air And Radiation
Office of Air Quality Planning and Standards
Research Triangle Park, NC 27711

March 1991

This report has been reviewed by the Office of Air Quality Planning and Standards, U.S. Environmental Protection Agency, and approved for publication as received from the contractor. Approval does not signify that the contents necessarily reflect the views and policies of the Agency, neither does mention of trade names or commercial products constitute endorsement or recommendation for use.

CONTENTS

Figures iv
Tables v

1. Purpose of Document 1
2. Overview of Document Contents 3
3. Background 5
   Nature of Pollutant 5
   Overview of Production and Uses 8
4. Formaldehyde Emission Sources 13
   Formaldehyde Production 13
   Urea-Formaldehyde and Melamine-Formaldehyde Resin Production 23
   Phenol-Formaldehyde Resin Production 29
   Polyacetal Resin Production 41
   Hexamethylenetetramine Production 49
   Pentaerythritol Production 52
   1,4-Butanediol Production 57
   Trimethylolpropane Production 57
   4,4-Methylenedianiline Production 59
   Phthalic Anhydrine Production 60
   Use of Formaldehyde-Based Additive Solid Urea and Ureaform Fertilizer Production 63
   Miscellaneous Resin Applications 67
   Manufacturing Minor Products Using Formaldehyde as a Feedstock 73
   Miscellaneous Commercial/Consumer Uses of Formaldehyde 75
   Combustion Sources 78
   Oil Refining 84
   Asphaltic Concrete Production and Use 92
   Formaldehyde Production in the Atmosphere via Photo-Oxidation 98
5. Source Test Procedures 100

References 103
Appendix A-Calculations of Process Fugitive Emissions A-1
References for Appendix A A-8

FIGURES

Number		Page
1	Common reactions of formaldehyde	7
2	General reactions of formaldehyde	9
3	Chemical use tree for formaldehyde	12
4	Basic operations that may be used for formaldehyde production by the silver catalyst process	14
5	Basic operations that may be used for formaldehyde production by the metal oxide process	16
6	Basic operations that may be used in urea-formaldehyde and melamine-formaldehyde resin manufacture	27
7	Basic operations that may be used fur phenol-formaldehyde resin manufacturing	39
8	Basic operations that may be used for the production of polyacetal resins	48
9	Basic operations that may be used in the production of hexamethylenetetramine	51
10	Basic operations that may be used in the production of pentaerythritol	54
11	Basic operations that may be used in the production of phthalic anhydride	62
12	Basic flowsheet for a refinery	85
13	Method 5 sampling train modified for the measurement of formaldehyde	102
A-1	Process flow diagram for metal oxide process	A-3
A-2	Process flow diagram for silver catalyst process	A-6

TABLES

Number		Page
1	Physical Properties of Monomeric Formaldehyde	6
2	Uncontrolled and Controlled Formaldehyde Emission Factors for a Hypothetical Formaldehyde Production Plant (Silver Catalyst Process)	18
3	Uncontrolled and Controlled Formaldehyde Emission Factors for a Hypothetical Formaldehyde Production Plant (Metal Oxide Catalyst Process)	20
4	Production of Formaldehyde	24
5	Production of Urea-Formaidehyde Resins	30
6	Production of Melamine-Formaldehyde Resins	35
7	Production of Phenol-Formaldehyde Resins	42
8	Production of Polyacetal Resins	50
9	Production of Nexamethylenetetramine	53
10	Production of Pentaerythritol	56
11	Production of 1,4-Butanediol	58
12	Production of 4,4-Methylenedianiline	61
13	Production of Phthalic Anhydride	64
14	Formaldehyde Emission Factors for Solid Urea Production	66
15	Standard Industrial Classification Codes for Manufacturing Processes Engaged in Resin Applications	74
16	Manufacturers of Minor Products Using Formaldehyde as a Feedstock	76
17	Formaldehyde Emissions From External Combustion Sources	80

TABLES (continued)

Number		Page
18	Formaldehyde Emissions From Stationary Internal Combustion Engines	83
19	Total Aldehyde Emissions From Incineration and Open Burning	83
20	Formaldehyde Emissions From Transportation Sources	86
21	Formaldehyde Emissions From Construction and Farm Equipment	87
22	Formaldehyde Emissions From Petroleum Refining	91
23	Petroleum Refineries	94

SECTION 1
PURPOSE OF DOCUMENT

The EPA, States and local air pollution control agencies are becoming increasingly aware of the presence of substances in the ambient air that may be toxic at certain concentrations. This awareness, in turn, has led to attempts to identify source/receptor relationships for these substances and to develop control programs to regulate emissions. Unfortunately, very little information is available on the ambient air concentrations of these substances or on the sources that may be discharging them to the atmosphere.

To assist groups interested in inventorying air emissions of various potentially toxic substances, EPA is preparing a series of documents such as this that compiles available information on sources and emissions of these substances. This document specifically deals with formaldehyde. Its intended audience includes Federal, State, and local air pollution personnel and others who are interested in locating potential emitters of formaldehyde and making gross estimates of air emissions therefrom.

Because of the limited amount of data available on formaldehyde emissions, and since the configuration of many sources is not the same as those described herein, this document is best used as a primer to inform air pollution personnel about (1) the types of sources that may emit formaldehyde, (2) process variations and release points that may be expected within these sources, and (3) available emissions information indicating the potential for formaldehyde to be released into the air from each operation.

The reader is strongly cautioned against using the emissions information contained in this document to try to develop an exact assessment of emissions from any particular facility. Since insufficient data are available to develop statistical estimates of the accuracy of these emission factors, no estimate can be made of the error that could result when these factors are used to calculate emissions from any given facility. It is possible, in some extreme cases, that orders-of-magnitude differences could result between actual and calculated emissions, depending on differences in source configurations, control equipment, and operating practices. Thus, in situations where an accurate assessment of formaldehyde emissions is necessary, source-specific information should be obtained to confirm

the existence of particular emitting operations, the types and effectiveness of control measures, and the impact of operating practices. A source test and/or material balance should be considered as the best means to determine air emissions directly from an operation.

SECTION 2
OVERVIEW OF DOCUMENT CONTENTS

As noted in Section 1, the purpose of this document is to assist Federal, State, and local air pollution agencies and others who are interested in locating potential air emitters of formaldehyde and making gross estimates of air emissions from these sources. Because of the limited background data available, the information summarized in this document does not and should not be assumed to represent the source configuration or emissions associated with any particular facility.

This section provides an overview of the contents of this document. It briefly outlines the nature, extent, and format of the material presented in the remaining sections of this report.

Section 3 of this document provides a brief summary of the physical and chemical characteristics of formaldehyde, its commonly occurring forms, and an overview of its production and uses. A chemical use tree summarizes the quantities of formaldehyde consumed in various end use categories in the United States. This background section may be useful to someone who needs to develop a general perspective on the nature of the substance and where it is manufactured and consumed.

Section 4 of this document focuses on major industrial source categories that may discharge formaldehyde air emissions. This section discusses the manufacture of formaldehyde, its use as an industrial feedstock, applications of resins produced from formaldehyde, and formaldehyde production as a byproduct of combustion. For each major industrial source category described in Section 4, example process descriptions and flow diagrams are given, potential emission points are identified, and available emission factor estimates are presented that show the potential for formaldehyde emissions before and after controls employed by industry. Individual companies are named that are reported to be involved with either the production and/or use of formaldehyde, based primarily on trade publications.

The final section of this document summarizes available procedures for source sampling and analysis of formaldehyde. Details are not prescribed, nor does EPA endorse any of these sampling and analysis procedures. At this time, EPA generally has not evaluated these methods. Consequently,

this document merely provides an overview of applicable source sampling procedures, citing references for those interested in conducting source tests.

This document does not contain any discussion of health or other environmental effects of formaldehyde, nor does it include any discussion of ambient air levels or ambient air monitoring techniques.

Comments on the contents or usefulness of this document are welcome, as is any information on process descriptions, operating practices, control measures, and emissions information that would enable EPA to improve its contents. All comments should be sent to:

Chief, Source Analysis Section (MD-14)
Air Management Technology Branch
U.S. Environmental Protection Agency
Research Triangle Park, N.C. 27711

SECTION 3
BACKGROUND

NATURE OF POLLUTANT

Formaldehyde is a colorless gas at normal temperatures with a pungent, irritating odor. It is the simplest member of the family of aldehydes and has the following structure:

```
   O
   ||
   C
  /  \
 H    H
```

Formaldehyde gas is soluble in water, alcohols, and other polar solvents. Physical properties of pure monomeric formaldehyde are presented in Table 1.1 The JANAF Interim Thermochemical Tables list thermodynamic properties data for formaldehyde for temperatures ranging from 0 to 6000°K.

In the presence of air and moisture at room temperature, formaldehyde readily polymerizes to paraformaldehyde, a solid mixture of linear polyoxymethylene glycols containing 90 to 99 percent formaldehyde. Another form of formaldehyde is its cyclic trimer, trioxane ($C_3H_6O_3$). In aqueous solutions, formaldehyde reacts with water to form methylene glycol. Reactions that form methylene glycol, trioxane, and paraformaldehyde are illustrated in Figure 1. As shown in the figure, these reactions are reversible.

Pure, dry formaldehyde gas is stable from 80 to 100°C and decomposes very slowly up to 300°C. Polymerization takes place slowly below room temperature but is accelerated by the presence of impurities. Warming pure liquid formaldehyde to room temperature in a sealed container causes rapid polymerization and the evolution of heat (63 kJ/mole). Decomposition produces carbon monoxide and hydrogen gas. When catalyzed by certain metals (platinum, copper, or chromia and alumina), formaldehyde decomposition can produce methanol, methyl formate, formic acid, carbon dioxide, and methane.[1]

As a result of its unique structure, formaldehyde has a high degree of chemical reactivity and good thermal stability in comparison to other carbonyl compounds. This structural uniqueness is due to the attachment of the carbonyl directly to two hydrogens.[3] As a result, formaldehyde is capable of undergoing a wide variety of chemical reactions, many of which are useful in commercial processes. The commercial forms of formaldehyde include formaldehyde/water solutions, polymers, and derivatives.[1]

TABLE 1. PHYSICAL PROPERTIES OF MONOMERIC FORMALDEHYDE[1]

Synonyms	Methanal, methyl aldehyde, methylene oxide, formic aldehyde, oxomethane, oxymethane, oxymethylene
Chemical Formula	HCHO
CAS Registry Number	50-00-0
Molecular Weight	30.03
Boiling Point (at 101.3 kPa),°C	-19
Melting Point, °C	-118
Density at -20°C, g/ml	0.8153
Density at -80°C, g/ml	0.9151
Antoine Constants for Determining Vapor Pressure[a]	
A	9.28176
B	959.43
C	243.392
Vapor Density	1.067 (air = 1)
Heat of Vaporation, ΔH_V	
at 19°C, kJ/mol	23.3
at 109 to -22°C, j/mol	$27,384 + 14.56T - 0.1207T^2$ (T = K)
Heat of Formation, $\Delta H°_f$ at 25°C, kJ/mol	-115.9
Gibbs Free Energy, $\Delta G°_f$ at 25°C, kJ/mol	-109.9
Heat Capacity, $C°_p$, J/(mol•K)	35.4
Entropy, S°, J/(mol•K)	218.8
Heat of Combustion, KJ/mol	561 - 571
Heat of Solution in Water and Lower Aliphatic Alcohols, kJ/mol	63
Critical Constants	
Temperature, °C	137.2 - 141.2
Pressure, MPa	6.784 - 6.637
Flammability in Air	
Lower/Upper Limits, mol %	7.0/73
Ignition Temperature, °C	430

[a] Log_{10} P = A-(B/(C+t)); where P = vapor pressure in pascals (PA) and t = temperature in °C.

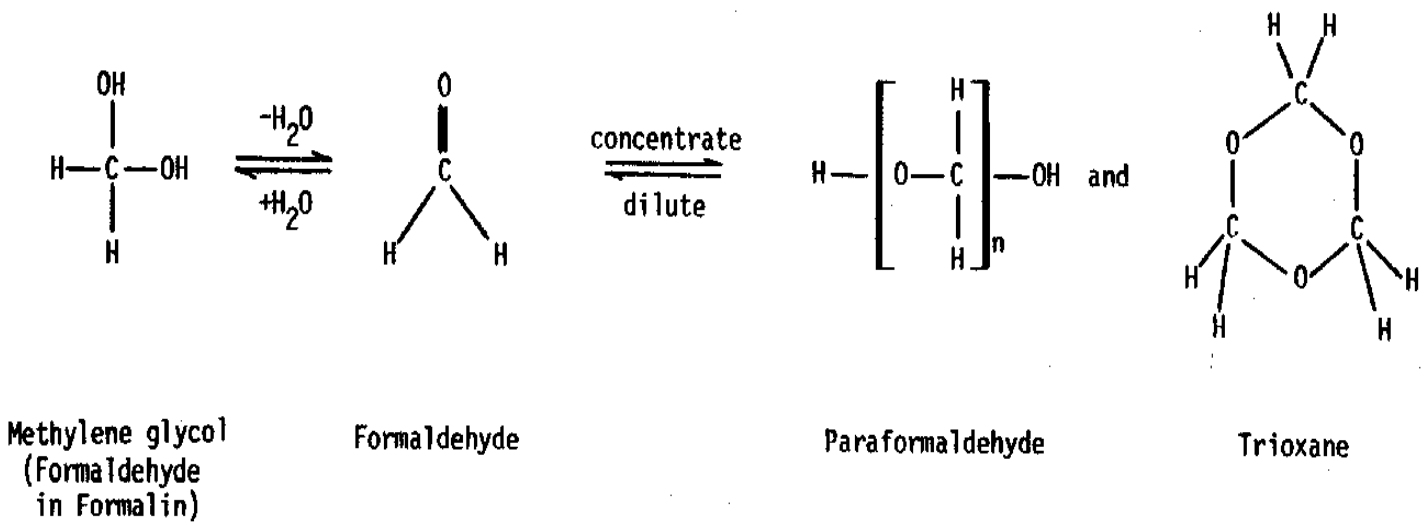

Figure 1. Common reactions of formaldehyde.

Because of its high chemical reactivity and good thermal stability, formaldehyde is used as a reactant in numerous commercial processes to synthesize a wide variety of products. These reactions fall into three categories:

- **S** Oxidation-reduction reactions;
- **S** Addition or condensation reactions with organics and inorganics; and
- **S** Self-polymerization reactions.

A general description of these reactions that apply to formaldehyde is presented in Figure 2.

The residence time of formaldehyde in the atmosphere has been estimated at between 0.1 and 1.2 days.[4] Residence time is defined as the time required for the concentration to decay to 1/e of its original value. The major mechanisms of destruction are reaction with hydroxyl radicals (OH•) and photolysis. The removal rates by physical processes such as deposition and removal in rain are considered minor.

OVERVIEW OF PRODUCTION AND USES

Formaldehyde was first produced in the United States in 1901 chiefly for use as an embalming agent and disinfectant.[5] It is now a high-volume, commercial chemical. Formaldehyde is available in several different forms to fit users' needs but is not available commercially in the form of the anhydrous monomer. Aqueous solutions, often called formalin, are available containing 37 to 50 percent formaldehyde by weight. These solutions may contain 6 to 15 percent stabilizer, usually methanol, to prevent polymerization. Solutions of formaldehyde in alcohol are available for processes that require high alcohol/low water content. These solutions, called Formcels*, are prepared with methanol, n-propanol, n-butanol, or isobutanol. Formaldehyde is also available in its polymeric forms of trioxane and paraformaldehyde.[3]

Currently, 13 formaldehyde producers in the United States operate at 48 locations. Most of the formaldehyde produced is consumed in captive uses at the producer plant site. The large number of plants results from the high expense associated with transport of aqueous solutions.

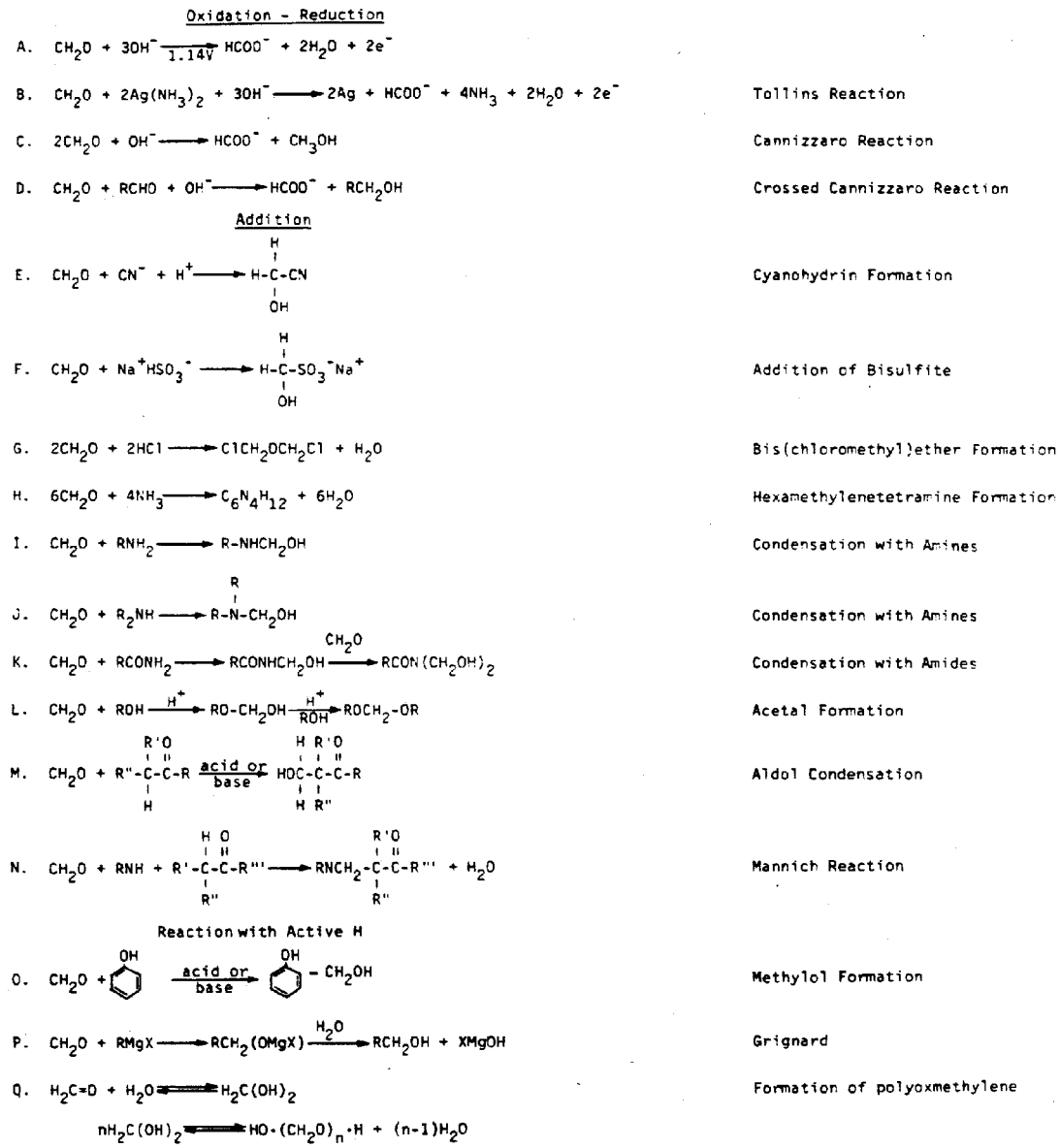

Figure 2. General reactions of formaldehyde.[3]

Production figures quoted for formaldehyde generally are expressed on the basis of 37 weight percent formalin solution. The 37 percent solution figure includes all aqueous and alcoholic solutions, paraformaldehyde, and trioxane.[3] The product mix produced depends on fluctuating captive needs and customer requirements. Production of formaldehyde in 1982 was estimated to be 2.18×10^7 megagrams on the basis of a 37 percent solution.[6] Exports were approximately 9.1×10^3 megagrams in 1982, and imports were negligible.[7]

Formaldehyde is produced in the United States by two methods: the metallic silver catalyst process and the metal oxide process. The silver catalyst process is the predominant process, accounting for 75 percent of formaldehyde manufactured, while the metal oxide process accounts for the remaining 25 percent. Both production methods use methanol as the starting material.[8]

In the silver catalyst process, a methanol-rich air mixture is passed over a stationary silver catalyst. The reaction products are formaldehyde and water vapor. Reaction conditions are approximately atmospheric pressure and temperatures of 450°to 650°C. The product gases are cooled and absorbed in water. Excess methanol is removed by distillation and returned to the process. Yields are typically 83 to 92 percent.[3]

The formation of formaldehyde in the silver catalyst process is thought to follow a two-step process involving the dehydrogenation of methanol followed by combustion of the hydrogen product. Alternatively, a combination of single-step processes has been proposed involving the simultaneous dehydrogenation and oxidation of formaldehyde. A number of variations of the basic silver catalyst process have been developed in order to increase yield, decrease side product formation, conserve energy and reduce emissions.[3]

The metal oxide catalyst process is licensed in the United States by Reichhold and Lummus. In this process, methanol is converted to formaldehyde by oxidation of methanol. The catalysts employed in this selective oxidation process are usually iron molybdenum oxide mixtures. The reactant mixture is rich in air, containing only 5 to 10 volume percent methanol. As in the silver catalyst process, the product gases are cooled and absorbed in water. The formaldehyde yield for the metal oxide process is higher than that for the silver catalyst process. Thus, the formaldehyde solution formed contains only a small amount of methanol, usually less than one percent, and does not require purification by distillation.[3]

Paraformaldehyde is normally produced from formalin solutions. These solutions are vacuum distilled until polymer precipitation occurs. Commercial paraformaldehyde-water solutions are available with formaldehyde contents ranging from 91 to 99 percent.[3]

Trioxane is prepared from formalin solution by distillation in the presence of either sulfuric acid or acidic sulfonate ion-exchange resin. The distillate is an azeotrope of trioxane, formaldehyde, and water, boiling at about 90°C. Trioxane is separated from the distillate by extraction with methylene chloride or à-chloronaphthalene. The trioxane is then recovered by distillation or crystallization.[3]

Formaldehyde is one of the most widely used industrial chemicals. The current uses of formaldehyde are listed in Figure 3, along with the percentage of the total product devoted to each use. Over 50 percent of the formaldehyde produced is used in the manufacture of resins such as urea-formaldehyde resins, phenol-formaldehyde resins, acetal resins, and melamine-formaldehyde resins. Other important uses of formaldehyde include the synthesis of hexamethylenetetramine, pentaerythritol, l,4-butanediol and other acetylenic chemicals, chelating agents, urea-formaldehyde concentrates, trimethylol propane, 4,4-methylenedianiline, acrylic esters, pyridine compounds, and nitroparaffins. Formaldehyde is also used in textile treating applications, dyes, disinfectants, and preservatives.[9,10]

Resins that are produced from formaldehyde are used primarily as binders for particleboard and plywood. Other uses for the resins are as molding compounds for dinnerware, appliances, electric controls, telephones, and wiring services; foundry resins; and adhesives for thermal and sound insulation. Butanediol produced from formaldehyde is used mainly to produce tetrahydrofuran, which is used as a solvent for vinyl resins and as an intermediate in the synthesis of other chemicals. Methylenedianiline is converted to methylenediphenyl isocyanate, which is used in the production of polyurethanes for reaction injection molding in automobiles.[10]

$$\text{METHANOL} + \text{OXYGEN} \xrightarrow[\text{SILVER METAL - 75\%, METAL OXIDE - 25\%}]{\text{CATALYST}} \text{FORMALDEHYDE}$$

$$(CH_3OH) \quad (\tfrac{1}{2}O_2) \qquad\qquad (HCHO)$$

USE	PERCENT
UREA-FORMALDEHYDE RESINS	- 30%
PHENOL-FORMALDEHYDE RESINS	- 24%
ACETAL RESINS	- 9%
MELAMINE-FORMALDEHYDE RESINS	- 4%
HEXAMETHYLENETETRAMINE	- 6%
PENTAERYTHRITOL	- 6%
1,4-BUTANEDIOL TETRAHYDROFURAN	- 3%
OTHER ACETYLENIC CHEMICALS	- 3%
CHELATING AGENTS	- 3%
UREA-FORMALDEHYDE CONCENTRATES	- 2%
TRIMETHYLOL PROPANE	- 2%
4,4'-METHYLENEDIANILINE M D ISOCYANATES	- 2%
TEXTILE TREATING APPLICATIONS	- 2%
ACRYLIC ESTERS	- 1%
PYRIDINE COMPOUNDS, NITROPARAFFINS, DYES, DISINFECTANTS, PRESERVATIVES, EXPORTS, OTHER	- 3%
	100%

Figure 3. Chemical use tree for formaldehyde[8-10]

SECTION 4
FORMALDEHYDE EMISSION SOURCES

This section discusses formaldehyde emissions from direct sources such as production of formaldehyde, production of chemicals using formaldehyde as a feedstock, and miscellaneous uses of formaldehyde. Indirect emission sources in which formaldehyde is formed as a byproduct also are discussed. Indirect sources of formaldehyde include refineries and combustion processes. Process and emissions information are presented for each source for which data are available.

FORMALDEHYDE PRODUCTION

Formaldehyde is produced in the United States by two processes. In the predominant process, methanol is dehydrogenated and oxidized in the presence of a silver catalyst to produce formaldehyde, hydrogen, and water. In the other process, formaldehyde and water are formed by the oxidation of methanol in the presence of a metal oxide catalyst.[10]

Process Descriptions

Silver Catalyst Process--

The major products of the silver catalyst process are formaldehyde, hydrogen, and water. Basic operations that may be used in a silver catalyst process are shown in Figure 4. Actual flow diagrams for production facilities will vary. In Figure 4, compressed air (Stream 1), which has been scrubbed to remove traces of sulfur dioxide, hydrogen sulfide, and other impurities, is passed through a vaporizer column, where it is heated and saturated with methanol vapor (Stream 2). The heated stream must maintain a methanol concentration greater than 37 volume percent in order to be above the upper explosive limit of methanol.[11]

The mixture (Stream 3) then enters a battery of converters that are maintained at a temperature of approximately 635°C. The hot effluent gases (Stream 4) are cooled rapidly to prevent decomposition of the product formaldehyde. Cooling is accomplished by indirect heat interchange with the feed mixture in the vaporizer and by then introducing the gas into the primary absorber.[10]

The primary absorber liquid is an aqueous solution of formaldehyde and methanol. A portion of this liquid is withdrawn from the bottom of the absorber column and recirculated to the top. The remainder Stream 5) is pumped to

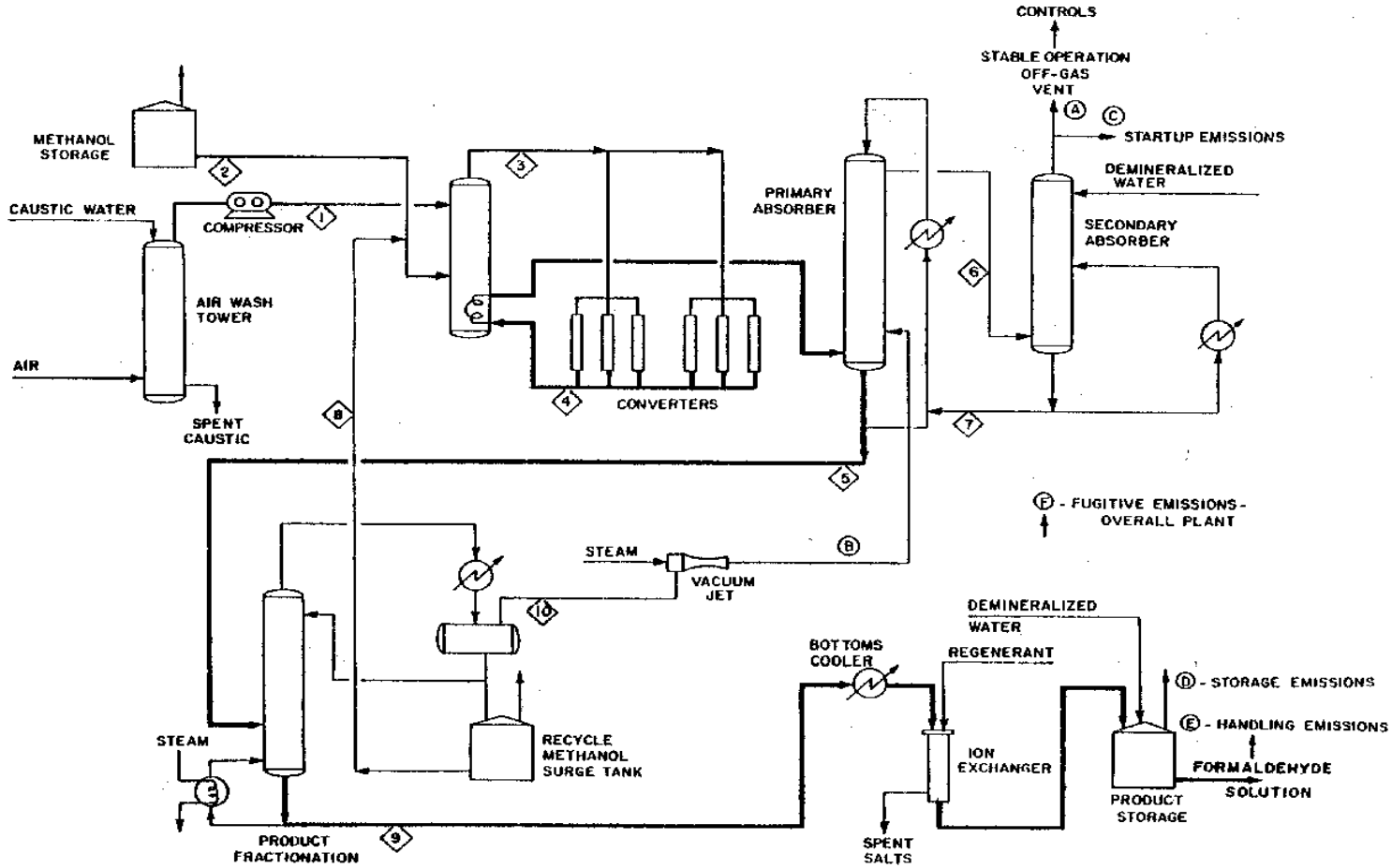

NOTE: The numbers in this figure refer to process streams, as discussed in the text, and the letters designate process vents. The heavy lines represent final product streams through the process.

Figure 4. Basic operations that may be used for formaldehyde production by the silver catalyst process.[11,12]

the product fractionation column. The uncondensed vapors and noncondensable gases (Stream 6) are withdrawn from the top of the primary absorber column and fed to a secondary absorber. The major portion of the uncondensed vapors is recovered in the secondary absorber column through contact with demineralized water, and the off-gas, consisting mostly of nitrogen with some entrained volatile organic compounds (VOC's), is vented (Vent A). The weak formaldehyde/methanol solution (Stream 7) withdrawn from the bottom of the secondary absorber column is pumped to the primary absorber column and used as makeup solution.[11]

The methanol-containing formaldehyde solution (Stream 5) is pumped to a fractionation column, where methanol is recovered. This vacuum distillation step yields an overhead product of approximately 99 percent methanol for recycle to the reactor and a bottom product of formaldehyde solution containing less than 1 percent methanol. The methanol vapor from the top of the column is condensed and recycled to the vaporizer (Stream 8). Uncondensed vapors (Stream 10) are vented (Vent B) or fed to the absorber.[11,12] The formaldehyde solution from the bottom of the fractionation column (Stream 9) is pumped to product storage tanks. When required by customer specifications, the solution is treated in an ion exchange system for removal of trace amounts of formic acid before being stored.[11]

As a final step, water is added to provide a suitable concentration for storage and shipping. Reported yields for the metallic silver catalyst process range from 83 to 92 percent.[11]

All product storage tanks are heated to prevent polymer formation and precipitation in storage. A series of tanks are used to blend and adjust the solution to the desired formaldehyde and methanol concentrations before it is shipped to the customer.[11]

Metal Oxide Catalyst Process--

In the metal oxide catalyst process, the major products are formaldehyde and water. The catalyst system most often used is ferric molybdate.

Figure 5, presents basic operations that may be used in a metal oxide catalyst process. Actual flow diagrams for production facilities will vary. The process begins as incoming air (Stream 1), which has been scrubbed to remove dust and trace

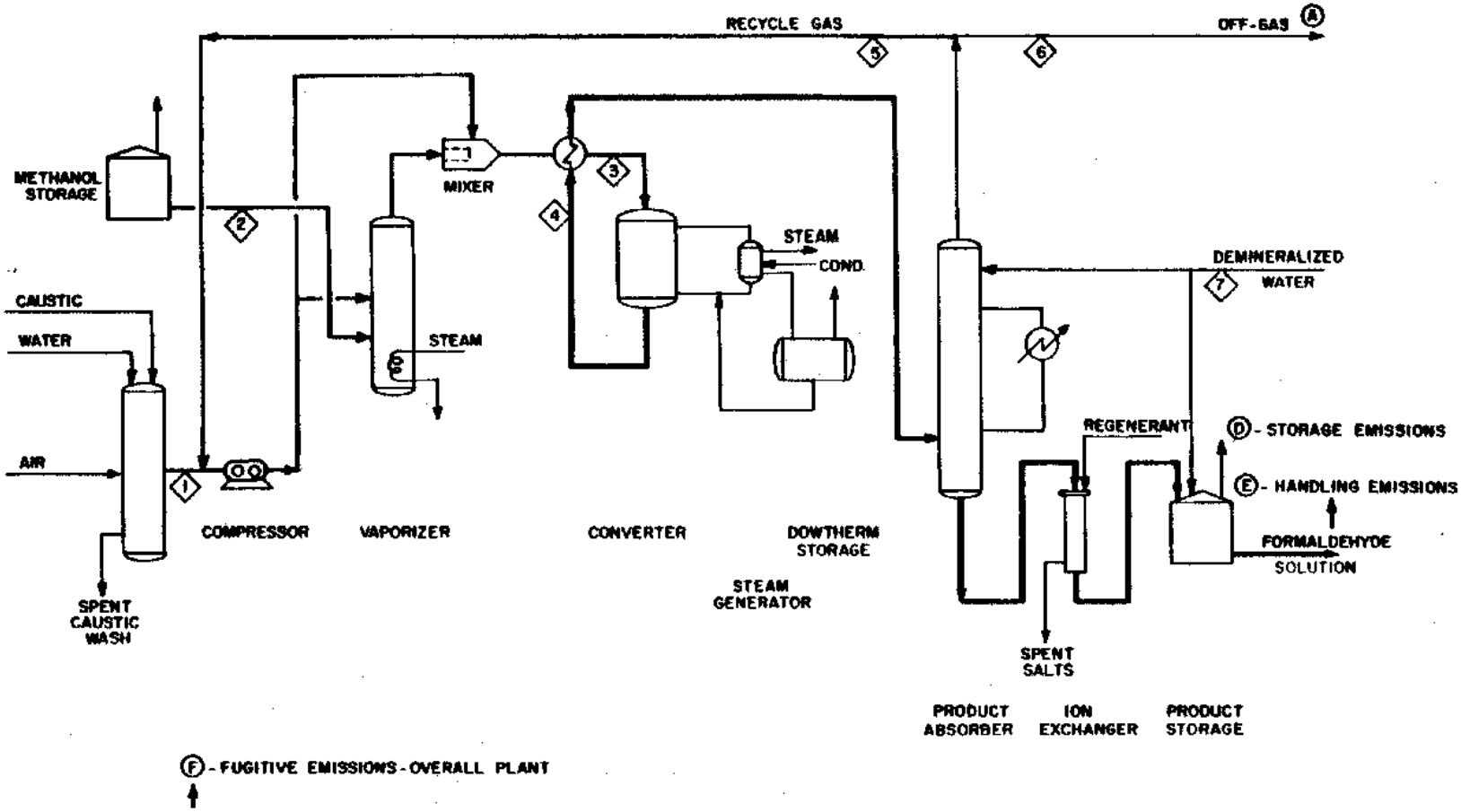

NOTE: The numbers in this figure refer to process streams, as discussed in the text, and the letters designate process vents. The heavy lines represent final product streams through the process.

Figure 5. Basic operations that may be used for formaldehyde production by the metal oxide process.[11]

impurities, is mixed with oxygen-lean recycle gas (Stream 5) from the process to lower the oxygen content of the air feed stream below 10.9 percent. This low oxygen content keeps the methanol concentration below the lower explosive limit when a portion of the air feed stream is saturated with methanol (Stream 2) in the vaporizer column. The methanol-saturated air is then mixed with the remaining air and preheated by heat exchange with the product gas (Stream 4) leaving the converter. The feed gas mixture (Stream 3) then enters the converter, which is maintained at 345°C by the exothermic oxidation reaction.[11]

The product gas (Stream 4) is cooled by heat exchange with the feed gas mixture and then quenched in the absorber column. The formaldehyde and methanol are removed from the gas stream by absorption in the aqueous solution. The unabsorbed gases and vapors exit at the top of the absorber column. A portion of this gas is recycled (Stream 5), and the remaining gas (Stream 6) is vented. The product solution drawn from the bottom of the absorber column contains approximately 0.8 percent methanol and 0.005 percent formic acid. The solution generally is treated in an ion exchange system to reduce the acidity and is then stored. As a final step, water (Stream 7) is added to provide a suitable concentration for storage and shipping. Process yields of 91 to 93 percent are reported for the metal oxide catalyst process.

Emissions

Uncontrolled formaldehyde emission factors for the silver catalyst process and the metal oxide catalyst process are listed in Table 2 and Table 3, respectively, with potential control techniques and associated emission factors for controlled emissions. These emission factors have been developed based on hypothetical plants for each of the two processes with total formaldehyde production capacities of 45,000 Mg/yr.[15]

Process Emissions–

Silver Catalyst Process – The primary source of formaldehyde process emissions is the purging of gases from the secondary absorber (Vent A in Figure 4). The product fractionator is another possible source of formaldehyde process emissions (Vent B). However, most producers report that gases from the fractionator are fed to the absorber before venting. Formaldehyde emissions also occur during plant startup. Formaldehyde plants are normally operated at design conditions to achieve highest yields and are shut down when product inventories are filled. The silver catalyst process

TABLE 2. UNCONTROLLED AND CONTROLLED FORMALDEHYDE EMISSION FACTORS FOR A HYPOTHETICAL FORMALDEHYDE PRODUCTION PLANT (SILVER CATALYST PROCESS)[a]

Emission source	Stream designation[b]	Uncontrolled formaldehyde emission factor[c]	Potentially applicable control technique	Percent reduction	Controlled formaldehyde emission factor[c]
Absorber	A	0.38 kg/Mg[d]	Thermal oxidation	98+[e]	0076 kg/Mg
			Flare	80[f]	0.076 kg/Mg
Product Fractionator	B	0.33 kg/MG[d]	Recycle to absorber	100[g]	0 kg/Mg
			Water scrubber	95[g]	0.017 kg/Mg
Startup Vent	C	0.10 kg/Mg[h]	None		
Formaldehyde Storage	D	0.03 kg/Mg[d]	Vent scrubber	90[i]	0.003 kg/Mg
			Thermal oxidation[j]	98+[e]	0006 kg/Mg
Handling	E	0.01 kg/Mg[d]	Vapor recovery	96	0.0004 kg/Mg
Process fugitive	F	0.70 kg/hr[k]	Quarterly I/M of pumps and valves	57	0.30 kg/hr[k]
			Monthly I/M of pumps and valves	69	0.22 kg/hr[k]
			Monthly I/M of valves, use of double mechanical seal pumps, and use of rupture disks[l]	91	0.063 kg/hr[k]

[a] Any given formaldehyde production plant may vary in configuration and level of control from this hypothetical facility. The reader is encouraged to contact plant personnel to confirm the existence of emitting operations and control technology at a particular facility prior to estimating its emissions.
[b] Letters refer to specific process vents in Figure 4.
[c] Emission factors in terms of kg/Mg refer to kilogram of formaldehyde emitted per megagram of 37 percent formaldehyde solution produced.
[d] Reference 11,pp. IV-3 to IV-4. Most producers incinerate or flare the absorber emissions and recycle the product-fractionator gases to the primary absorber.[12]
[e] The control efficiency for incineration varies depending on the design of the incinerator and the compound that is burned. The 98 percent level is an estimate of the control efficiency of an incinerator with a residence time of about 0.75 seconds and a temperature of about 870°C, for a compound that is difficult to incinerate.[13] Reference 12 estimates a control efficiency of 99 percent for incinerators on absorber vents.
[f] Reference 12 estimates a control efficiency of 80 percent for flares on absorber vents.
[g] Reference 11, p. V-2.
[h] Startup process is vented through absorber. No additional controls are reported on startup emissions.[12]
[i] Reference 12.
[j] Reference 14 reports the use of an incinerator to control storage tank emissions.
[k] Fugitive emission rate is independent of plant capacity. Refer to Appendix A for fugitive emission rate

calculations. In contrast to these estimates, Reference 14 reports formaldehyde emissions from individual absorber bottom pumps averaging only 10^{-6} kg/hr, and only 1.2×10^{-7} kg/hr for an agitation pump. Thus, with 24 pumps at a typical formaldehyde process, and using the higher value for all pumps, process fugitives from pumps total only about 2 x 10 kg/hr.

[l] I/M refers to inspection and maintenance.

TABLE 3. UNCONTROLLED AND CONTROLLED FORMALDEHYDE EMISSION FACTORS FOR A HYPOTHETICAL FORMALDEHYDE PRODUCTION PLANT (METAL OXIDE CATALYST PROCESS)[a]

Emission source	Stream designation[b]	Uncontrolled formaldehyde emission factor[c]	Potentially applicable control technique	Percent reduction	Controlled formaldehyde emission factor[c]
Absorber	A	0.47 kg/Mg[d]	Thermal oxidation	98+[e]	0009 kg/Mg
Formaldehyde	D	0.03 kg/Mg[d]	Vent scrubber	90[g]	0.003 kg/Mg
Handling	E	0.01 kg/Mg[d]	Vapor recovery	96[h]	0.0004 kg/Mg
Process fugitive	F	0.47 kg/hr[i]	Quarterly I/M of pumps and valves[j]	53	0.22 kg/hr[i]
			Monthly I/Mof pumps and valves[j]	73	0.13 kg/hr[i]
			Monthly I/M of valves, use of double mechanical seal pumps, and use of rupture disks[j]	79	0.063 kg/hr[i]

[a] Any given formaldehyde production plant may vary in configuration and level of control from this hypothetical facility. The reader is encouraged to contact plant personnel to confirm the existence of emitting operations and control technology at a particular facility prior to estimating its emissions.
[b] Letters refer to specific process vents in Figure 4.
[c] Emission factors in terms of kg/Mg refer to kilogram of formaldehyde emitted per megagram of 37 percent formaldehyde solution produced.
[d] Reference 11, pp. IV-7 to IV-8.
[e] Reference 13.
[f] The control efficiency for incineration varies depending on the design of the incinerator and the compound that is burned. The 98 percent level is an estimate of the control efficiency of an incinerator with a residence time of about 0.75 seconds and a temperature of about 870°C, for a compound that is difficult to incinerate. Reference 12 estimates control efficiency of 99 percent for incinerators on absorber vents.
[g] Reference 12
[h] Reference 11, p. v-2
[i] Fugitive emission rate is independent of plant capacity. Refer to Appendix A for fugitive emission rate

calculations.

[J] I/M refers to inspection and maintenance.

operates above the upper explosive limit of methanol. Thus, plant startup procedures must be handled carefully. Unstable conditions are encountered, and explosions can occur in the methanol vaporizer and the reactor. Various startup procedures are used in the industry. During startup, the output from the reactor may be vented until stable operation is achieved and an acceptable yield ratio is obtained. The flow is then switched into the absorber. Most formaldehyde producers report that startup vents go through the absorber before venting to the atmosphere.[12] Total startup time is usually 1 to 2 hours. The reactor feed rate varies as the startup proceeds. Initially, the reactor produces mainly carbon dioxide and water vapor. As the temperature rises, the formaldehyde yield increases, thereby increasing the amount of formaldehyde in the vented gas. Startup emissions, when venting through the absorber, are reported to be O.1 kg/Mg12 (see Table 2).

Metal Oxide Catalyst Process-- The metal oxide catalyst process operates below the explosive limit of methanol with an excess of air resulting in stable conditions during startup. Thus, venting of the reactor during startup is not required as it was for the silver catalyst process, and there are no intermittent startup emissions.

Formaldehyde process emissions result from venting gases from the product absorber (Vent A in Figure 5). The emission composition and flow rates are affected by the percent of absorber gas recycled. By recycling a portion of the oxygen-lean vent gas, the oxygen concentration in the reactor feed mixture can be reduced, making it possible for the concentration of methanol to be increased without forming an explosive mixture. This reduces the volume of reaction gases and thus reduces the emission rate of formaldehyde from the absorber.[15]

Storage Emissions–

Formaldehyde emissions (Vent D in Figure 4 and Figure 5) result from storing formaldehyde product. Formaldehyde storage emissions were estimated based on an average of four tanks per plant, a tank size of 190 cubic meters, 45 turnovers per year, and a bulk liquid temperature of 54°C. The tanks were assumed to be fixed-roof, half full, and subject to a diurnal temperature variation of 11.1°C.[15]

Handling Emissions--

Emission factors from the handling of formaldehyde product were calculated assuming submerged fill-pipe loading into trucks and tank cars.[15]

Fugitive Emissions--

Fugitive emissions of formaldehyde and other volatile organics result from leaks in process valves, pumps, compressors, and pressure relief valves. The rate of fugitive emissions of formaldehyde from these sources was calculated from the number of pumps, valves, compressors, and relief valves in formaldehyde service, the estimated formaldehyde concentration in streams in contact with these sources, and emission factors for fugitive sources.[15] The numbers of pumps, valves, compressors, and relief valves in formaldehyde service were estimated from the process flow diagrams and the total number of fugitive sources in VOC service for the hypothetical 45,000 Mg/yr plant. Refer to Appendix A for fugitive emission rate calculations.

Source Locations

Major formaldehyde producers and production locations are listed in Table 4.

UREA-FORMALDEHYDE AND MELAMINE-FORMALDEHYDE RESIN PRODUCTION

Urea-formaldehyde (U-F) and melamine-formaldehyde (M-F) resins are the most commonly used amino resins. They are produced domestically by adding formaldehyde (CH_2O) to urea (NH_2CONH_2) or melamine ($C_3N_3(NH_2)_3$) to form methylol monomer units, and subsequent condensation of these units to form a polymer.[17] Urea-formaldehyde resins are used in the production of home insulation and as adhesives in the production of particleboard, fiberboard, and interior plywood. Melamine-formaldehyde resins are used for high-pressure laminates such as counter and table tops, and are compression molded to form dinnerware.[9]

Process Description

The major products of the U-F and M-F resins production processes are U-F or M-F resins and water. Basic operations that may be used in U-F and M-F resin manufacture are shown in Figure 6. Amino resins generally are produced in a batch reactor but some are produced in closed continuous systems. The first reaction of the process, the addition of formaldehyde to the amino compound to form methylol compounds, is carried out under alkaline conditions.

TABLE 4. PRODUCTION OF FORMALDEHYDE[16]

Manufacturer	Location
Borden Inc.	
Borden Chem. Div.	
Adhesives and Chems. Div.	Demopolis, AL
	Diboll, TX
	Fayetteville, NC
	Kent, WA
	La Grande, OR
	Louisville, KY
	Missoula, MT
	Sheboygan, WI
	Springfield, OR
Petrochems. Div.	Geismar, LA
Celanese Corp.	
Celanese Chem. Co., Inc.	Bishop, TX
	Newark, NJ
	Rock Hill, SC
E. I. duPont de Nemours & Co., Inc.	
Chems. and Pigments Dept.	Belle, WV
	Grasselli, NJ
	Healing Springs, NC
	La Porte, TX
	Toledo, OH
GAF Corp.	
Chem. Products	Calvert City, KY
	Texas City, TX

TABLE 4. Continued

Manufacturer	Location
Georgia-Pacific Corp.	
Chem. Div.	Albany, OR
	Columbus, OH
	Conway, NC
	Crossett, AR
	Lufkin, TX
	Ressellville, SC
	Taylorsville, MS
Getty Oil Co.	
Chembond Corp., subsid.	Andalusia, AL
	Springfield, OR
	Winnfield, LA
International Minerals & Chem. Corp.	
IMC Chem. Group	
Indust. Chems. Div.	Seiple, PA
Kalama Chem. Inc.	Garfield, NJ
Monsanto Co.	
Monsanto Plastics & Resins Co.	Addhyston, OH
	Chocolate Bayou, TX
	Eugene, OR
	Springfield, MA
Nuodex, Inc.	Fords, NJ

TABLE 4. Continued

Manufacturer	Location
Perkins Indust., Inc.	Vicksburg, MS
Reichhold Chem., Inc. Borden Chem. Div. Adhesives and Chems. Div.	Hampton, SC Houston, TX Kansas City, KS Moncure, NC Tacoma, WA Tuscaloosa, AL White City, OR
Wright Chem. Corp.	Acme, NC

NOTE: This listing is subject to change as market conditions change, facility ownership changes, plants are closed down, etc. The reader should verify the existence of particular facilities by consulting current listings and/or the plants themselves. The level of formaldehyde emissions from any given facility is a function of variables such as capacity, throughput, and control measures and should be determined through direct contacts with plant personnel.

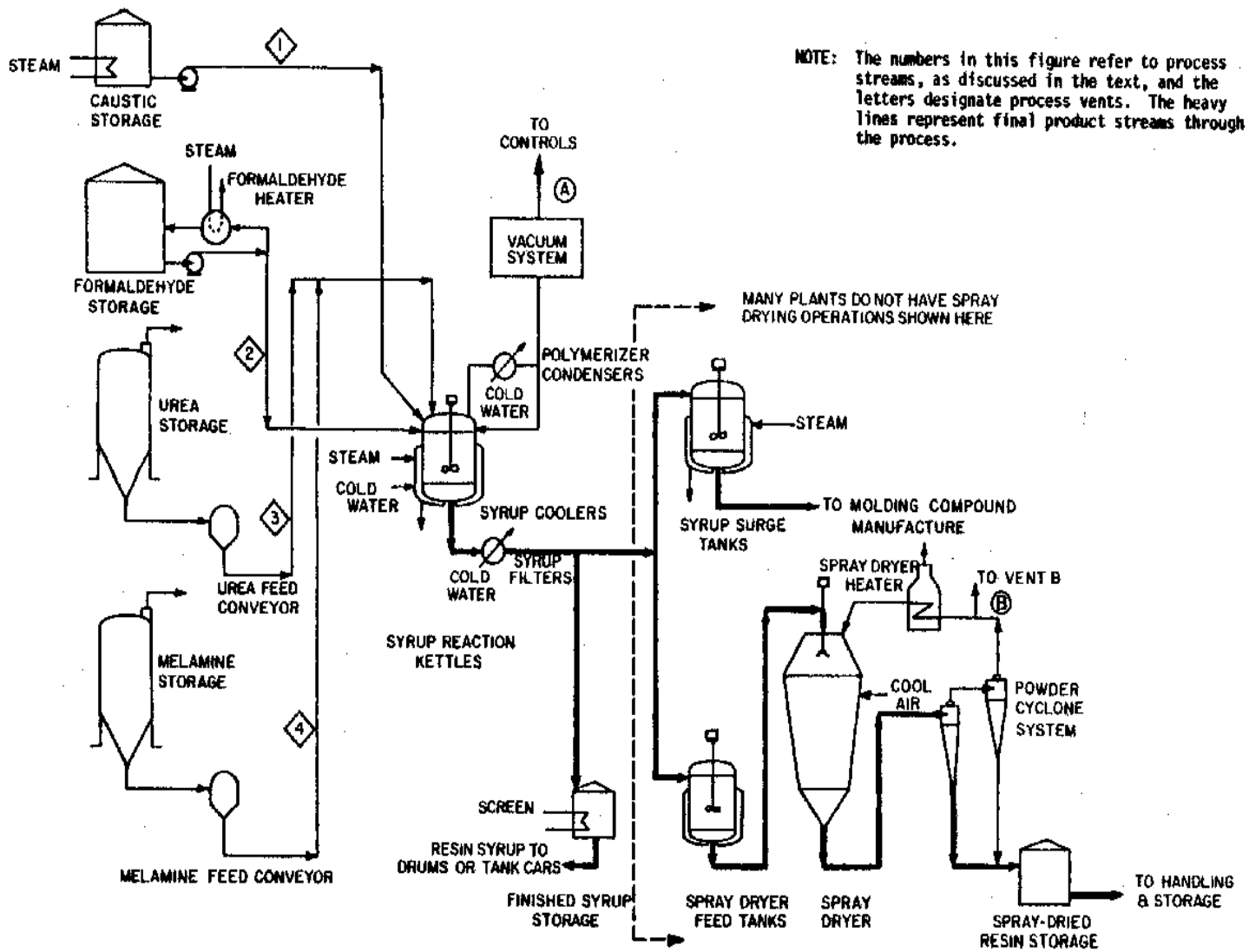

Figure 6. Basic operations that may be used in urea-formaldehyde and melamine-formaldehyde resin manufacture.[12,17]

Caustic, formaldehyde, and the amino compound (Streams 1-4) are charged to the heated reaction vessel.[17]

Next, the reactor conditions are altered to favor the second reaction, the condensation of the methylol compounds to form a polymer chain. The condensation reaction is carried out under acidic conditions and is stopped at the desired degree of polymerization by lowering the temperature and raising the pH.

At high degrees of polymerization, a solid polymer is produced. At low degrees of polymerization, a stable syrup is produced that can be used as an adhesive or laminating resin. The syrup can be combined with a filler to make a molding compound or used with other polymers in coatings formulations. The syrup can also be spray dried to form a powder for convenient storage and handling.[17,18] However, some producers of U-F and M-F resins report that there are no spray drying operations at their production facilities.[12]

Emissions

Formaldehyde emissions from the polymerization process occur while water is being removed from the reactor under vacuum (Vent A in Figure 6) and during the cleaning of the reactor kettles between batches. Fugitive gaseous emissions may occur from relief valves, pumps, valves, and flanges. Potential formaldehyde emission sources in spray drying operations are belt driers, continuous drum dryers, and continuous screen dryers that are vented to the atmosphere (Vent B).[18]

Uncontrolled formaldehyde emissions from U-F and M-F resin manufacture have been estimated as follows:[8,12]

- Process--0.15 to 1.5 kg/Mg of 37 percent formaldehyde used;
- Formaldehyde Storage--0.03 to 0.2 kg/Mg of 37 percent formaldehyde used; and
- Fugitive--0.03 to 0.2 kg/Mg of 37 percent formaldehyde used.

Urea-formaldehyde and M-F production plants may vary in configuration and level of control. The level of control on formaldehyde storage emissions should be equivalent to that for formaldehyde production.[12] The reader is encouraged to contact plant personnel to confirm the existence of emitting operations and control technology at a particular facility prior to estimating its emissions.

Source Locations

Major U-F resin producers and production locations are listed in Table 5. Table 6 lists major M-F resin producers and production locations.

PHENOL-FORMALDEHYDE RESIN PRODUCTION

Phenol-formaldehyde resins are formed by polymerization of phenol and formaldehyde. The two major resin types are resols and novolaks. Resols are formed in an alkaline medium with an excess of formaldehyde and are marketed as thermosetting resins, bonding resins, varnishes, and laminates. Novolaks are formed in an acid medium deficient in formaldehyde. These are thermoplastic resins that require mixing with formaldehyde or a formaldehyde donor such as hexamethylenetetramine to produce a thermosetting product. Novolak products include thermosetting resin powders, varnishes, and laminates.[18]

Process Descriptions

Resol Production Process--

Resols are commonly produced in a batch process. Major products of the resol production process are phenol-formaldehyde resin and water. Basic operations that may be used in a resol production process are shown in Figure 7.

Phenol (Stream 1), formaldehyde (Stream 2), and sodium hydroxide (Stream 3) are charged to an agitating reactor. Steam is then fed to the kettle jacket and to internal coils to initiate the reaction. As the exothermic reaction begins, cooling water is supplied to the kettle to maintain temperature control. Additional cooling is accomplished by using a reflux condenser.[18]

The degree of polymerization is monitored by withdrawing samples and testing them. The degree of polymerization determines the physical properties of the product. The reaction can be halted at a point where the polymer is still water soluble enough that it can be incorporated into bonding resins. Alternatively, the reaction can be allowed to progress to the point at which the polymer precipitates. In this case, the water is removed and an organic solvent can be added to form a varnish. If the polymerization reaction is allowed to continue until the resin reaches a brittle stage, a thermosetting molding powder can be produced.

TABLE 5. PRODUCTION OF UREA-FORMALDEHYDE RESINS[16]

Manufacturer	Location
Allied Corp.	
The Bendix Corp., subsid.	
Friction Material Div.	Green Island, N.Y.
American Cyanamid Co.	
Polymer Products Div.	Mobile, AL
	Wallingford, CT
	Charlotte, NC
American Hoechst Corp.	
Indust. Chems. Div.	Mount Holly, NC
Apex Chem. Corp.	Elizabethport, NJ
Auralux Chem. Associates, Inc.	Hope Valley, RI
Borden, Inc.	
Borden Chem. Div.	
Adhesives and Chem. Div.	Demopolis, AL
	Diboll, TX
	Fayetteville, NC
	Fremont, CA
	Kent, WA
	La Grande, OR
	Louisville, KY
	Missoula, MT
	Sheboygan, WI
	Springfield, OR
Cargill, Inc.	
Chem. Products Div.	Carpentersville, IL
	Forest Park, GA
	Lynwood, CA
Celanese Corp.	
Celanese Plastics & Specialties Co., div.	
Celanese Specialty Resins, div.	Louisville, KY
Clark Oil & Refining Corp.	
Clark Chem. Corp., subsid.	Blue Island, IL
C.N.C. Chem. Corp.	Providence, RI
Commercial Products Co., Inc.	Hawthorne, NJ

TABLE 5. Continued

Manufacturer	Location
Consolidated Papers, Inc.	
Consoweld Corp., subsid.	Wisconsin Rapids, WI
Glasvrit America, Inc.	Detroit, MI
Cook Paint and Varnish	North Kansas City, MO
Crown-Metro, Inc.	Greenville, SC
Dan River, Inc.	
Chem. Products Div.	Danville, VA
De Soto, Inc.	Garland, TX
Dock Resins Corp.	Linden, NJ
Eastern Color & Chem. Co.	Providence, RI
Georgia-Pacific Corp.	
Chem. Div.	Albany, OR
	Columbus, OH
	Conway, NC
	Coos Bay, OR
	Crossett, AR
	Eugene, OR
	Louisville, MS
	Lufkin, TX
	Newark, OH
	Peachtree City, GA
	Port Wentworth, GA
	Richmond, CA
	Russellville, SC
	Taylorsville, MS
	Ukiah, CA
	Vienna, GA
Getty Oil Co.	
Chembond Corp., subsid.	Andalusia, AL
	Springfield, OR
	Winnfield, LA
Guardsman Chems., Inc.	Grand Rapids, MI
Gulf Oil Corp.	
Gulf Oil Chems. Co.	High Point, NC
Indust. Chems. Div.	West Memphis, AR

TABLE 5. Continued

Manufacturer	Location
Millmaster Onyx Group, subsid.	
Lyndal Chem. Div.	Lyndhurst, NJ
Hanna Chem. Coatings Corp.	Columbus, OH
Hercules, Inc.	Chicopee, MA
	Hattlesburg, MS
	Milwaukee, WI
	Portland, OR
	Savannah, GA
H & N Chem. Co.	Totowa, NJ
Libbey-Owens-Ford Co.	
LOF Plastic Products, subsid.	Auburn, MA
Mobil Corp.	
Mobil Oil Corp.	
Mobil Chem. Co. Div.	
Chem. Coatings Div.	Kankakee, IL
Monsanto Co.	
Monsanto Plastics & Resins Co.	Addyston, OH
	Chocolate Bayou, TX
	Eugene, OR
	Santa Clara, CA
	Springfield, MA
National Casein Co.	Chicago, IL
	Tyler, TX
National Casein of California	Santa Ana, CA
National Casein of New Jersey	
Adhesives Div.	Riverton, NJ

TABLE 5. Continued

Manufacturer	Location
	National
Starch and Chem. Corp.	
Proctor Chem. Co., Inc., subsid.	Salisbury, NC
Perstorp, Inc.	Florence, MA
Plaskon Products, Inc.	Toledo, OH
Plastics Mfg. Co.	Dallas, TX
PPG Indust., Inc.	
Coatings and Resins Div.	Oak Creek, WI
Reichhold Chems., Inc.	Andover, MA
	Detroit, MI
	Moncure, NC
	South San Francisco, CA
	Tacoma, WA
	Tuscaloosa, AL
	White City, OR
Varcum Div.	Niagara Falls, NY
Scott Paper Co.	
Packaged Products Div.	Chester, PA
	Everett, WA
	Fort Edward, NY
	Marinette, WI
	Mobile, AL
Southeastern Adhesives Co.	Lenoir, NC
The Standard Oil Co. (Ohio)	
Sohio Indust. Products Co., div.	
Dorr-Oliver, Inc., unit	Niagara Falls, NY
Sun Chem. Corp.	
Chems. Group	
Chems. Div.	Chester, SC
SUS Chem. Corp., Inc.	East Providence, RI
	Rock Hill, SC

TABLE 5. Continued

Manufacturer	Location
Sybron Corp.	
Chem. Div.	
Jersey State Chem. Co., div.	Haledon, NJ
Synthron, Inc.	Ashton, RI
	Morganton, NC
Tyler Corp.	
Reliance Universal, Inc., subsid.	
Specialty Chems. and Resins Div.	Louisville, KY
United Merchants & Mfgs., Inc.	
Valchem - Chem. Div.	Langley, SC
Valspar Corp.	
McWhorter, Inc., subsid.	Baltimore, MD
West Point-Pepperell, Inc.	
Grifftex Chem. Co., subsid.	Opelika, AL
Weyerhaeuser Co.	Marshfield, WI

Note: This listing is subject to change as market conditions change, facility ownership changes, plants are closed down, etc. The reader should verify the existence of particular facilities by consulting current listings and/or the plants themselves. The level of formaldehyde emissions from any given facility is a function of variables such as capacity, throughput, and control measures and should be determined through direct contacts with plant personnel.

TABLE 6. PRODUCTION OF MELAMINE-FORMALDEHYDE RESIN[16]

Manufacturer	Location
American Cynamid Co.	
Polymer Products Div.	Kalamazoo, MI
	Mobile, AL
	Wallingford, CT
	Charlotte, NC
Formica Corp., subsid.	Evandale, OH
American Hoechst Corp.	
Indust. Chems. Div.	Mount Holly, NC
Auralux Chem. Associated, Inc.	Hope Valley, RI
Borden Inc.	
Borden Chem. Div.	
Adhesives and Chems. Div.	Diboll, TX
	Kent, WA
	Sheboygan, WI
	Springfield, OR
Cargill, Inc.	
Chem. Products Div.	Carpentersville, IL
	Forest Park, GA
	Lynwood, CA
Celanese Corp.	
Celanese Plastics & Specialties Co., div.	
Celanese Specialty Resins, div.	Louisville, KY
Chagrin Valley Co. Ltd.	
Nevamar Corp., subsid.	Odenton, MD
Clark Oil & Refining Corp.	
Clark Chem. Corp., subsid.	Blue Island, IL
C.N.C. Chem. Corp.	Providence, RI
Glasvrit America, Inc.	Detroit, MI
Cook Paint and Varnish Co.	North Kansas City, MO
Crown-Metro, Inc.	Greenville, SC
Dan River, Inc.	
Chem. Products Div.	Danville, VA
Dock Resins Corp.	Linden, NJ

TABLE 6. Continued

Manufacturer	Location
Eastern Color & Chem. Co	Providence, RI
Gen. Electric Co.	
Engineered Materials Group	
Electromaterials Business Dept.	Coshocton, OH
	Schenectady, NY
Georgia-Pacific Corp.	
Chem. Div.	Albany, OR
	Columbus, OH
	Conway, NC
	Coos Bay, OR
	Crossett, AR
	Eugene, OR
	Louisville, MS
	Lufkin, TX
	Newark, OH
	Port Wentworth, GA
	Richmond, CA
	Russellville, SC
	Taylorsville, MS
	Ukiah, CA
	Vienna, GA
Getty Oil Co.	
Chembond Corp., subsid.	Springfield, OR
	Winnfield, LA
Guardsman Chems., Inc.	Grand Rapids, MI
Hanna Chem. Coatings Corp.	Columbus, OH
Libbey-Owens-Ford Co.	
LOF Plastic Products, subsid.	Auburn, ME
Mobil Corp.	
Mobil Oil Corp.	
Mobil Chem. Co., div.	
Chem. Coatings Div.	Kankakee, IL
Monsanto Co.	
Monsanto Polymer Products Co.	Santa Clara, CA
	Springfield, MA
National Starch and Chem. Corp.	
Proctor Chem. Co., Inc., subsid.	Salisbury, NC

TABLE 6. Continued

Manufacturer	Location
Perstorp, Inc.	Florence, MA
Plastics Mfg. Co.	Dallas, TX
PPG Indust., Inc.	
Coatings and Resins Div.	Circleville, OH
	Oak Creek, WI
Reichhold Chems., Inc.	Andover, MA
	Detroit, MI
	South San Francisco, CA
	Tacoma, WA
	Tuscaloosa, AL
	White City, OR
Scott Paper Co.	
Packaged Products Div.	Chester, PA
	Mobile, AL
Sun Chem. Corp.	
Chems. Group	
Chems. Div.	Chester, SC
Synthron, Inc.	Morganton, NC
Tyler Corp.	
Reliance Universal, Inc., subsid.	
Specialty Chems. and Resins Div.	Louisville, KY
United Merchants & Mfgs., Inc.	
Valchem - Chem. Div.	Langley, SC
U.S. Oil Co.	East Providence, RI
Southern U.S. Chem. Co., Inc., subsid.	Rock Hill, SC
Valspar Corp.	
McWhorter, Inc., subsid.	Baltimore, MD
Westinghouse Electric Corp.	
Insulating Materials Div.	Manor, PA

TABLE 6. Continued

Manufacturer	Location
West Point-Pepperell, Inc.	
Grifftex Chem. Co., subsid.	Opelika, AL

Note: This listing is subject to change as market conditions change, facility ownership changes, plants are closed down, etc. The reader should verify the existence of particular facilities by consulting current listings and/or the plants themselves. The level of formaldehyde emissions from any given facility is a function of variables such as capacity, throughput, and control measures and should be determined through direct contacts with plant personnel.

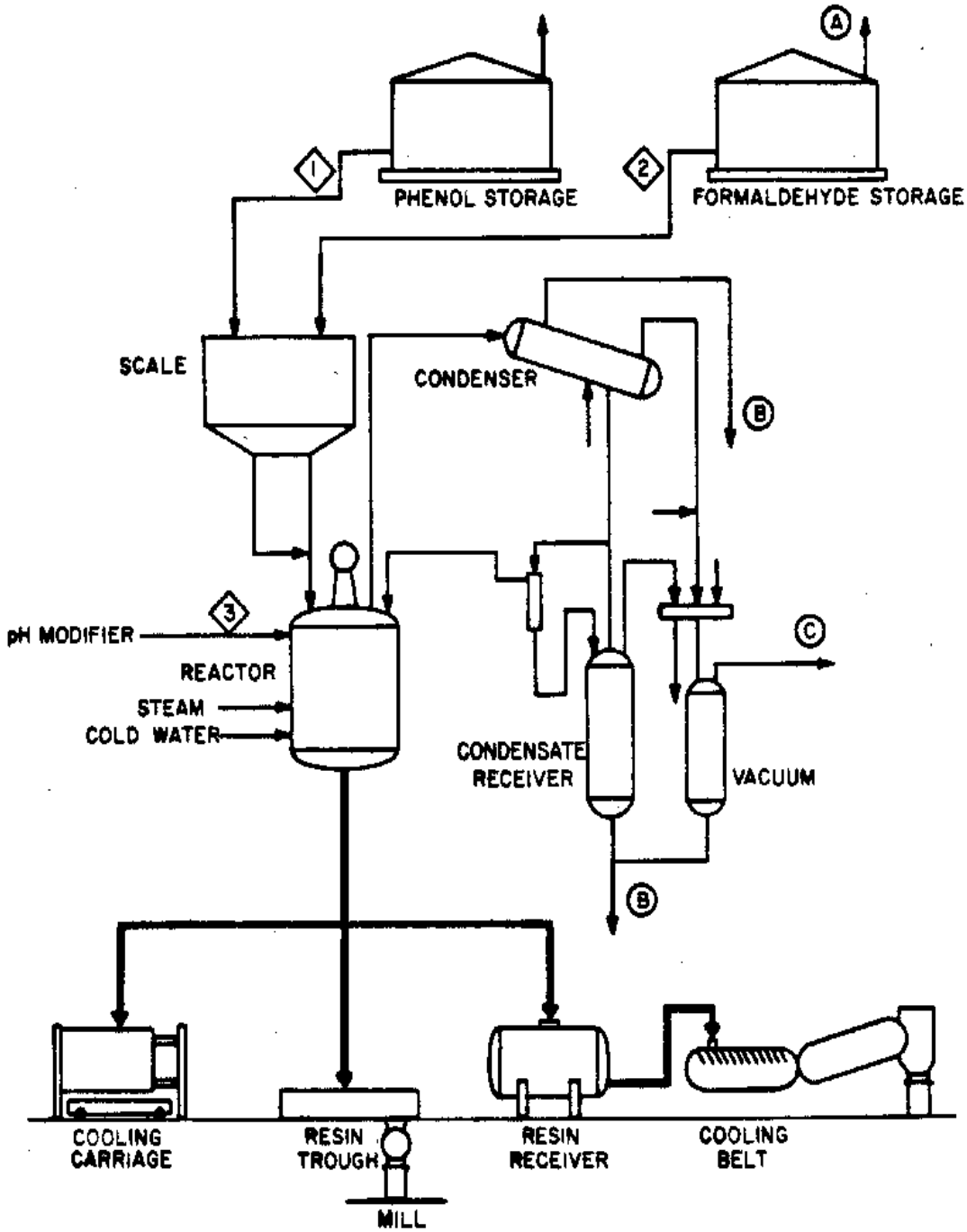

NOTE: The numbers in this figure refer to process streams, as discussed in the text, and the letters designate process vents. The heavy lines represent final product streams through the process.

Figure 7. Basic operations that may be used for phenol-formaldehyde resin manufacturing.[19]

The polymerization reaction is stopped by rapid cooling and neutralization with sulfuric acid. The mixture is then distilled in the reactor kettle to purify the resin. If the resin application requires a low concentration of water, the resin is dehydrated, often under vacuum.[18]

The production of dry product requires discharge of the resin from the reactor through a special quick-discharge valve to prevent it from becoming an insoluble, infusible solid. Cooling must be accomplished by spreading the material in thin layers because of its low thermal conductivity. Cooling devices include water-cooled or air-cooled floors, trays in racks, and moving belts. After cooling, the solid is ground, screened, and packaged. Some of the solid resols require several water washing steps. This procedure necessitates drying the resin before it is packaged. The solid resin may be blended with fillers and additives before it is readied for marketing.[18]

Novolak Production Process--

The production of novolak resins is also commonly performed by a batch process. Figure 7 presents a flow diagram describing basic operations that may be used in this process. As in the production of resols, phenol (Stream l) and formaldehyde (Stream 2) are charged to a jacketed batch reactor. However, sulfuric or hydrochloric acid (Stream 3) is added instead of a base. The temperature is raised to initiate the reaction. If strongly acidic conditions are used, a vacuum reflux system must be used for cooling, but in many cases atmospheric reflux is sufficient. Additional cooling is provided by circulating cooling water in the jacket and in the internal coils of the reactor. When the reaction is completed, the resin is purified by distillation in the reactor kettle and subsequent dehydration. In some cases, the polymer is neutralized before it undergoes further processing.

In solid resin production, the reactor charge is dumped onto cooling surfaces in thin layers. Water-cooled or air-cooled floors, trays in racks, and moving belts are used for rapid cooling. The solid resin is then ground, and screened. Fillers, coloring agents, and hexamethylenetetramine may be blended with the resin, which can then be fused on hot rollers, ground and packaged as a finished thermosetting resin product.

During the production of solutions used in varnishes and laminating agents, solvent is also added in the reactor. The solutions are packaged in drums or tanks.[18]

Emissions

Formaldehyde emissions from the production of resols and novolaks may result from the storage of formaldehyde (Vent A) before it is charged to the reactor and from the distillation and dehydration (Vents B and C) of the reaction mixture. Carbon adsorption or liquid extraction is used to control emissions from these operations. Fugitive gaseous emissions may occur at the condenser, vacuum line, sample ports, and vents of both processes. Intermittent formaldehyde emissions occur at safety blow-off valves. Formaldehyde emissions also may result from washing reactor kettles. Water washing of some resols during product preparation may produce formaldehyde emissions.[18] Uncontrolled formaldehyde emission factors for the production of phenol-formaldehyde resins have been estimated as follows:[8,12]

- **S** Process--0.15 to 1.5 kg/Mg of 37 percent formaldehyde used;
- **S** Formaldehyde Storage--0.03 to 0.2 kg/Mg of 37 percent formaldehyde used;

and

- **S** Fugitive--0.03 to 0.2 kg/Mg of 37 percent formaldehyde used.

Phenol-formaldehyde production plants may vary in configuration and level of control. The level of control on formaldehyde storage emissions should be equivalent to that for formaldehyde production.[12] The reader is encouraged to contact plant personnel to confirm the existence of emitting operations and control technology at a particular facility prior to estimating its emissions.

Source Locations

Major phenol-formaldehyde resin producers and production locations are listed in Table 7.

POLYACETAL RESIN PRODUCTION

Acetal resins are produced by the polymerization of anhydrous formaldehyde or its trimer, trioxane. Formaldehyde and trioxane homopolymers and copolymers of these compounds and other monomers are produced. The homopolymer is a chain of repeating oxymethylene structures ($-OCH_2-$), while the copolymer has the oxymethylene structure occasionally interrupted by a comonomer unit such as ethylene.[18,20] Polyacetal resins are

TABLE 7. PRODUCTION OF PHENOL-FORMALDEHYDE RESINS[16]

Manufacturer	Location
Allied Corp.	
The Bendix Corp., subsid.	
Friction Materials Div.	Green Island, NY
American Cyanamid Co.	
Formica Corp., subsid.	Evendale, OH
American Hoechst Corp.	
Indust. Chems. Div.	Mount Holly, NC
AMETEK, Inc.	
Haveg Div.	Wilmington, DE
Ashland Oil, Inc.	
Ashland Chem. Co., subsid.	
Chem. Systems Div.	Columbus, OH
Foundry Products Div.	Calumet City, IL
	Cleveland, OH
Borden, Inc.	
Borden Chem. Div	
Adhesives and Chems. Div.	Demopolis, Al
	Diboll, TX
	Fayetteville, NC
	Fremont, CA
	Kent, WA
	La Grande, OR
	Louisville, KY
	Missoula, MT
	Sheboygan, WI
	Springfield, OR
Brand-S Corp.	
Cascade Resins, Div.	Eugene, OR
Chagrin Valley Co., Ltd.	
Nevamar Corp., subsid.	Odenton, MD
Clark Oil & Refining Corp.	
Clark Chem. Corp., subsid.	Blue Island, IL
Core-Lube, Inc.	Danville, IL

TABLE 7. Continued

Manufacturer	Location
CPC Internat'l Inc.	
CPC North America Div.	
Indust. Diversified Unit	
Amce Resin Corp.	Forest Park, IL
The Dexter Corp.	
Midland Div.	Waukegan, IL
General Electric Co.	
Engneered Materials Group	
Electromaterials Business Dept.	Coshocton, OH
	Schenectady, NY
The P.D. George Co.	St. Louis, MO
Georgia-Pacific Chemical Group	Albany, OR
	Columbus, OH
	Conway, NC
	Coos Bay, OR
	Crossett, AR
	Eugene, OR
	Louisville, MS
	Lufkin, TX
	Newark, OH
	Peachtree City, GA
	Port Wentworth, GA
	Russellville, SC
	Taylorville, MS
	Ukiah, CA
	Vienna, GA
Getty Oil Co.	
Chembond Corp., subsid	Andalusia, AL
	Spokane, WA
	Springfield, OR
	Winnfield, LA
Gulf Oil Corp.	
Gulf Oil Chems. Co.	
Indust. Chems. Div.	Alexandria, LA
Heresite-Seekaphen, Inc.	Manitowoc, WI

TABLE 7. Continued

Manufacturer	Location
Hugh J. Resins Co.	Long Beach, CA
Inland Steel Co.	
Inland Steel Container Co., div.	Alsip, IL
The Ironsides Co.	Columbus, OH
Koppers Co., Inc.	
Organic Materials Group	Bridgeville, PA
Lawter Internat'l Inc.	Moundsville, AL
Libby-Owens-Ford Co.	
LOF Plastic Products, subsid.	Auburn, ME
Masonite Corp.	
Alpine Div.	Gulfport, MS
Minnesota Mining and Mfg. Co.	
Chem. Resources Div.	Cordova,IL Cottage Grove, MN
Mobil Corp.	
Mobil Oil Corp.	
Mobil Chem. Co., Div.	
Chem. Coatings Div.	Kankakee, IL Rochester, NY
Monogram Indust., Inc.	
Spaulding Fibre Co., Inc., subsid.	De Kalb, IL Tonawanda, NY
Monsanto Co.	
Monsanto Plastics & Resins Co.	Addyston, OH Chocolate Bayou, TX Eugene, OR Santa Clara, CA Springfield, MA
Nies Chem. Paint Co.	
Kordell Indust., div.	Mishawaka, IN
The O'Brien Corporation-Southwestern Region	Houston, TX

TABLE 7. Continued

Manufacturer	Location
Occidental Petroleum Corp.	
Hooker Chem. Corp., subsid.	
Plastics & Chem. Specialties Group	
Durez Materials Resins & Molding	Kenton, OH
	North Tonawanda, NY
Owens-Corning Fiberglass Corp.	
Resins & Coatings Div.	Barrington, NJ
	Kansas City, KS
	Newark, OH
	Waxahacie,TX
Plastic Engineering Co.	Sheboygan, WI
Polymer Applications, Inc.	Tonawanda, NY
Polyrez Co., Inc.	Woodbury, NJ
Raybestos-Manhattan, Inc.	
Adhesives Dept.	Stratford, CT
Reichhold Chems., Inc.	Andover, MA
	Carteret, NJ
	Detroit, MI
	Kansas City, KS
	Moncure, NC
	South San Francisco, CA
	Tacoma, WA
	Tuscaloosa, AL
	White City, OR
Vacuum Div.	Niagara Falls, NY
Rogers Corp.	Manchester, CT
Schenectady Chems., Inc.	Oyster Creek,TX
	Rotterdam Junction, NY
	Schenectady, NY
The Sherwin-Williams Co.	
Chems. Div.	Fords, NJ

TABLE 7. Continued

Manufacturer	Location
Simpson Timber Co.	
Oregon Overlay Div.	Portland, OR
The Standard Oil Co. (Ohio)	
Sohio Indust. Products Co., div.	
Dorr-Oliver Inc., unit	Niagara Falls, NY
Union Carbide Corp.	
Coatings Materials Div.	Bound Brook, NJ
	Elk Grove, CA
United Technologies Corp.	
Inmont Corp., subsid.	Anaheim, CA
	Cincinnati, OH
	Detroit, MI
Valentine Sugars, Inc.	
Valite Div.	Lockport, LA
West Coast Adhesives Co.	Portland, OR
Westinghouse Electric Corp.	
Insulating Materials Div.	
Micarta Div.	Manor, PA
	Hampton, SC
Weyerhaeuser Co.	Longview, WA
	Marshfield, WI

Note: This listing is subject to change as market conditions change, facility ownerships change, plants are closed down, etc. The reader should verify the existence of particular facilities by consulting current listings and/or the plants themselves. The level of formaldehyde emissions from any given facility is a function of variables such as capacity, throughput, and control measures and should be determined through direct contacts with plant personnel.

used to produce a variety of parts for automobiles, plumbing fixtures, hardware, lawn and garden equipment, and sporting goods.[10]

Process Description

Basic operations that may be used in the production of polyacetal resins from formaldehyde and trioxane are shown in Figure 8. Where formaldehyde is to be polymerized, the first step in the process is the production of anhydrous formaldehyde vapor from formaldehyde solution. Water is first evaporated from aqueous formaldehyde solution to form semiformals, paraformaldehyde, and polyoxymethylene which are purified and thermally decomposed to produce anhydrous formaldehyde. Impurities such as methanol, formic acid, and water are removed by washing with nonvolatile polyols or by freeze-trapping slightly above the boiling point of formaldehyde.[18]

Anhydrous formaldehyde monomer is then fed to an agitated batch reactor with an inert diluent, initiators, and dispersants, where it is polymerized at a low temperature. The polymer molecular weight is controlled by the addition of chain-termination and transfer agents. The reaction is terminated by stopping the flow of monomer. The solid polymer is separated from the diluent by filtration and centrifugation. Chain ends are stabilized by treatment with acetic anhydride and refluxing to form acetyl groups. The final product is then washed and dried.[18]

In trioxane polymerization, trioxane is prepared from aqueous formaldehyde by acidification and distillation. The trimer is then separated from the aqueous distillate by extraction or crystallization before it is further purified by fractional distillation. Trioxane may then be polymerized by bulk, suspension, or solution methods in the production of the copolymer. Stabilization is accomplished by copolymerization with cyclic ethers.[18]

The final polymer is extruded. Additives may be added during extrusion. Extruded molten polymer strands are quenched in a water bath and then pelletized and stored.[18]

Emissions

Formaldehyde emissions may result from the storage of aqueous formaldehyde solution (Vent A, Figure 8) prior to feed preparation. The major source of process and fugitive

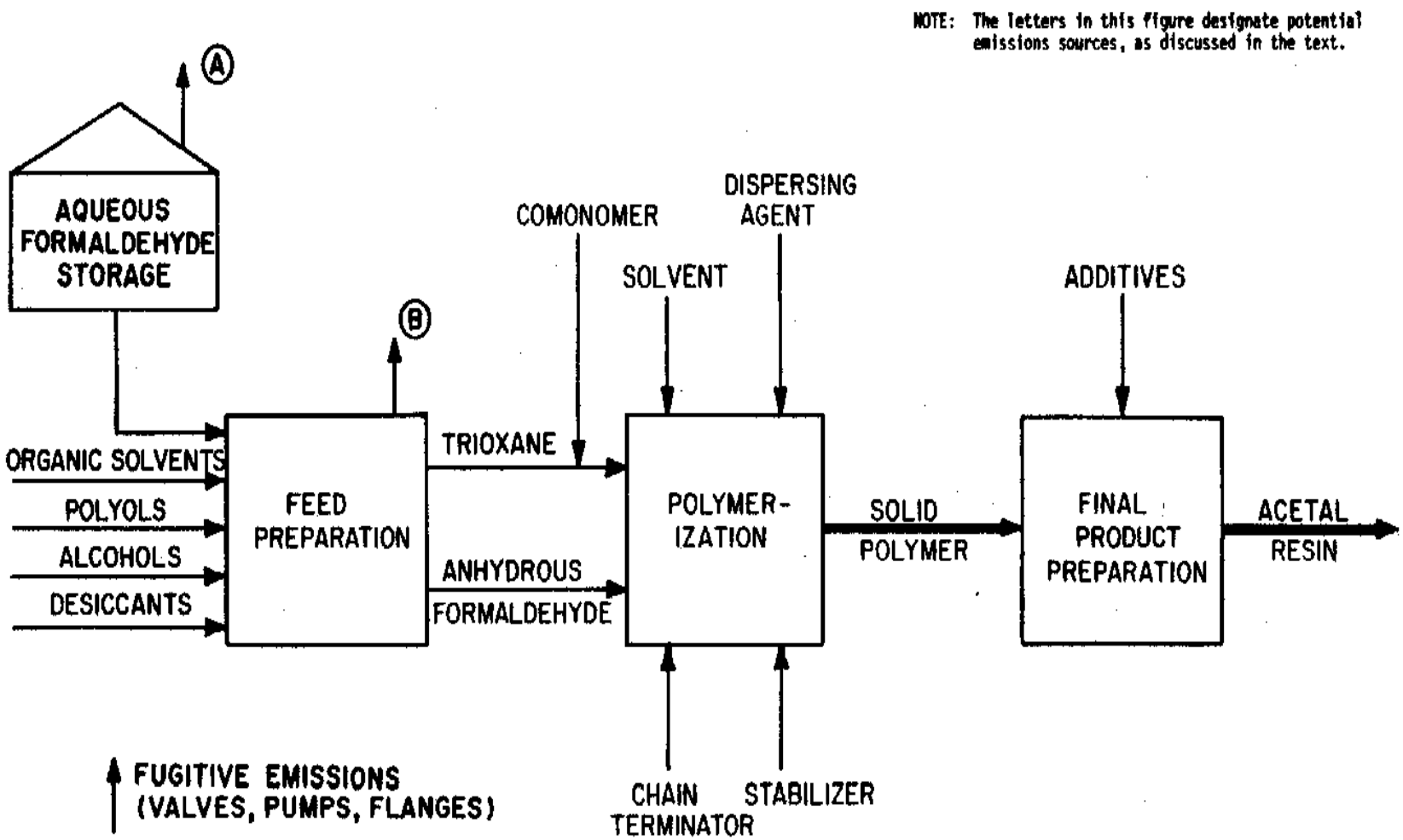

Figure 8. Basic operations that may be used for the production of polyacetal resins.[18]

emissions is the feed preparation step (Source B). Formaldehyde emission factors from the production of polyacetal resins have been reported as follows:[12,14]

- **S** Process -- 0.09 to 0.37 kg/Mg of 37 percent formaldehyde used;
- **S** Formaldehyde Storage--0.02 to 0.03 kg/Mg of 37 percent formaldehyde used; and
- **S** Fugitive--0.02 to 0.36 kg/Mg of 37 percent formaldehyde used.

No information was available on the basis of these estimates or types of controls involved. Polyacetal resin production plants may vary in configuration and level of control. The reader is encouraged to contact plant personnel to confirm the existence of emitting operations and control technology at a particular facility prior to estimating its emissions.

Source Locations

Major polyacetal resin producers and their locations are listed in Table 8.

HEXAMETHYLENETETRAMINE PRODUCTION

The main use of hexamethylenetetramine is in the production of cyclonite explosives for the military. Other uses are as curing agents for phenolic thermosetting resins and as a component in the production of pneumatic tire rubbers, insecticides, pharmaceuticals, and textile treating agents.[10]

Process Description

The major products of the hexamethylenetetramine production process are hexamethylenetetramine and water. Basic operations that may be used to produce hexamethylenetetramine are shown in Figure 9. Aqueous formaldehyde solution is first charged to a reaction kettle, followed by ammonia gas in a 3:2 formaldehyde/ammonia mole ratio. During addition of the reactants, the temperature is maintained at about 20 to 30°C.[21]

The reaction mixture is then fed to a vacuum evaporator, where it is maintained at a temperature between 30 and 50°C and at a pH of 7 to 8. As water is removed, the reactants condense to form hexamethylenetetramine. After most of the water has been removed, the product forms crystals, which are centrifuged, washed with water, and dried to yield the final product. The water from the centrifuge and the wash water are recycled to the system.[21] The process yield is 97 percent.[22]

TABLE 8. PRODUCTION OF POLYACETAL RESINS[16]

Manufacturer	Location	Trade name
Celanese Corp.		
Celanese Plastics & Specialties Co., Div.		
Celanese Engineering Resins, Div.	Bishop, TX	(Celcon®)
E.I. duPont de Nemours & Co., Inc.		
Polymer Products Dept	Parkersburg, WV	(Delrin®)

NOTE: This listing is subject to change as market conditions change, facility ownership changes, plants are closed down, etc. The reader should verify the existence of particular facilities by consulting current listings and/or the plants themselves. The level of formaldehyde emissions from any given facility is a function of variables such as capacity, throughput, and control measures and should be determined through direct contacts with plant personnel.

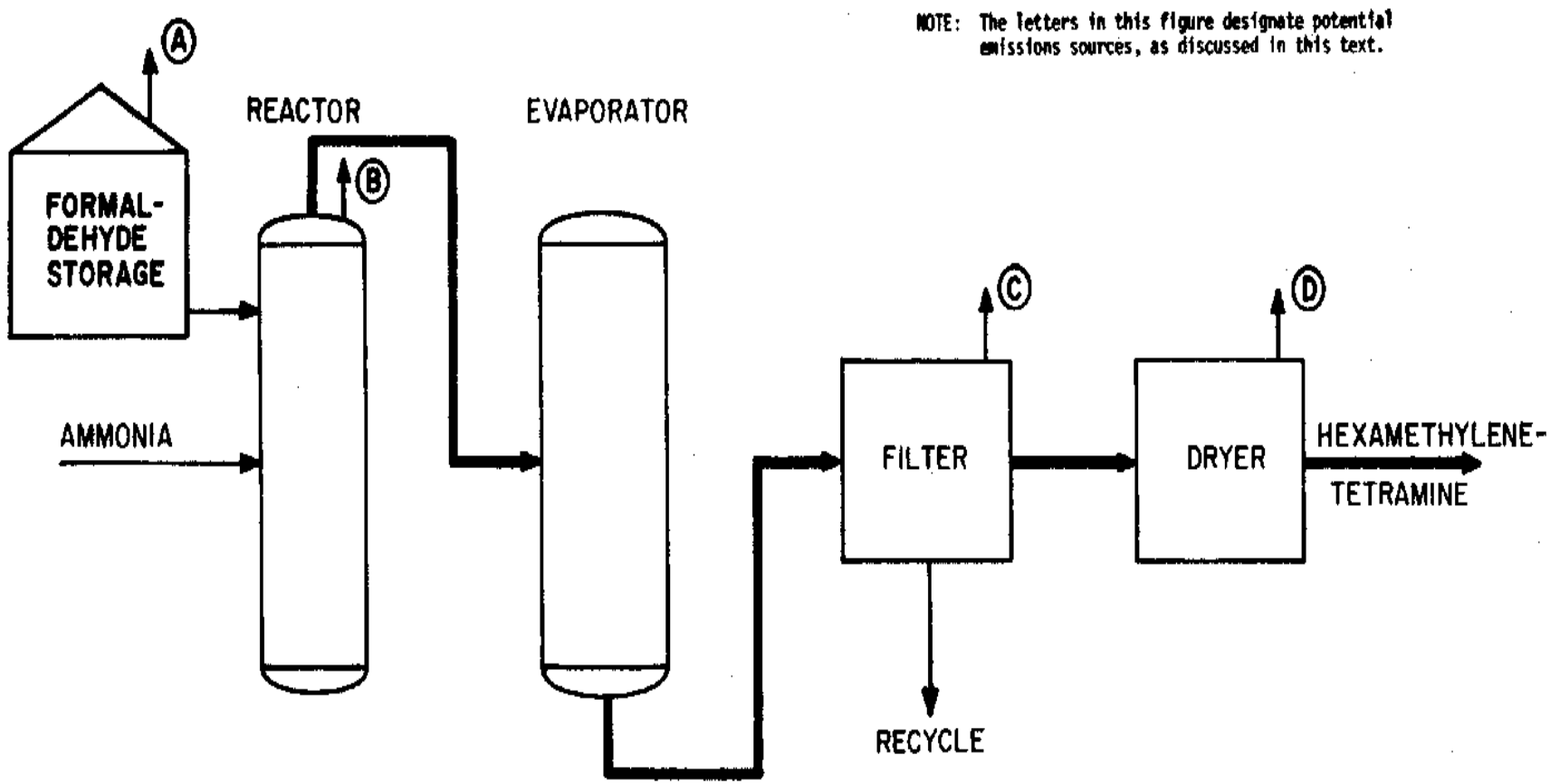

Figure 9. Basic operations that may be used in the production of hexamethylenetetramine[21]

Emissions

Formaldehyde emission sources include off-gases from the reactor, waste water from the centrifuge wash bleed line, and the drier vent.22 Formaldehyde emission factors from the production of hexamethylenetetramine have been estimated as follows:[8]

- Process--0.38 kg/Mg of 37 percent formaldehyde used;
- Formaldehyde Storage--0.05 kg/Mg of 37 percent formaldehyde used;

and

- Fugitive–0.11 kg/Mg of 37 percent formaldehyde used.

No information was available on the basis of these estimates or types of controls involved. Reference 12 reports that there are virtually no process formaldehyde emissions and that storage and fugitive losses total approximately 0.05 kg/Mg.

Hexamethylenetetramine production plants may vary in configuration and level of control. The reader is encouraged to contact plant personnel to confirm the existence of emitting operations and control technology at a particular facility prior to estimating the emissions.

Source Locations

Major producers of hexamethylenetramine and their production locations are listed in Table 9.[16]

PENTAERYTHRITOL PRODUCTION

Pentaerythritol is used in the production of alkyd resins and oil-based paints. Other uses include the manufacturing of some synthetic lubricants for the automobile industry.[10]

Process Description

Major products of the pentaerythritol production process are pentaerythritol, alkali formate, and water. Basic operations that may be used in the production of pentaerythritol are shown in Figure 10. Formaldehyde is produced onsite at some plants for direct use as a feedstock in this process.[12] Pentaerythritol is made by the condensation reaction of formaldehyde and acetaldehyde in the presence of an alkali solution. Most plants use a batch process.[21]

A sodium hydroxide solution or a calcium hydroxide slurry is added to a formaldehyde solution in a reactor in which the temperature is controlled at 15° to 20°C. Liquid acetaldehyde

TABLE 9. PRODUCTION OF HEXAMETHYLENETETRAMINE[16]

Manufacturer	Location
Borden, Inc.	
Borden Chem. Div.	
Adhesives and Chems. Div.	Fayetteville, NC
W.R. Grace & Co.	
Indust. Chems. Group	
Organics Chems. Div.	Nashua, NH
Nuodex, Inc.	Fords, NJ
Occidential Petroleum Corp.	
Hooker Chem. Corp., subsid.	
Plastics & Chem. Specialties Group	
Durez Resins & Moulding Materials	North Tonawanda, NY
Plastics Engineering Co.	Sheboygan, WI
Wright Chem. Corp.	Acme, NC

NOTE: This listing is subject to change as market conditions change, facility ownership changes, plants are closed down, etc. The reader should verify the existence of particular facilities by consulting current listings and/or the plants themselves. The level of formaldehyde emissions from any given facility is a function of variables such as capacity, throughput, and control measures and should be determined through direct contacts with plant personnel.

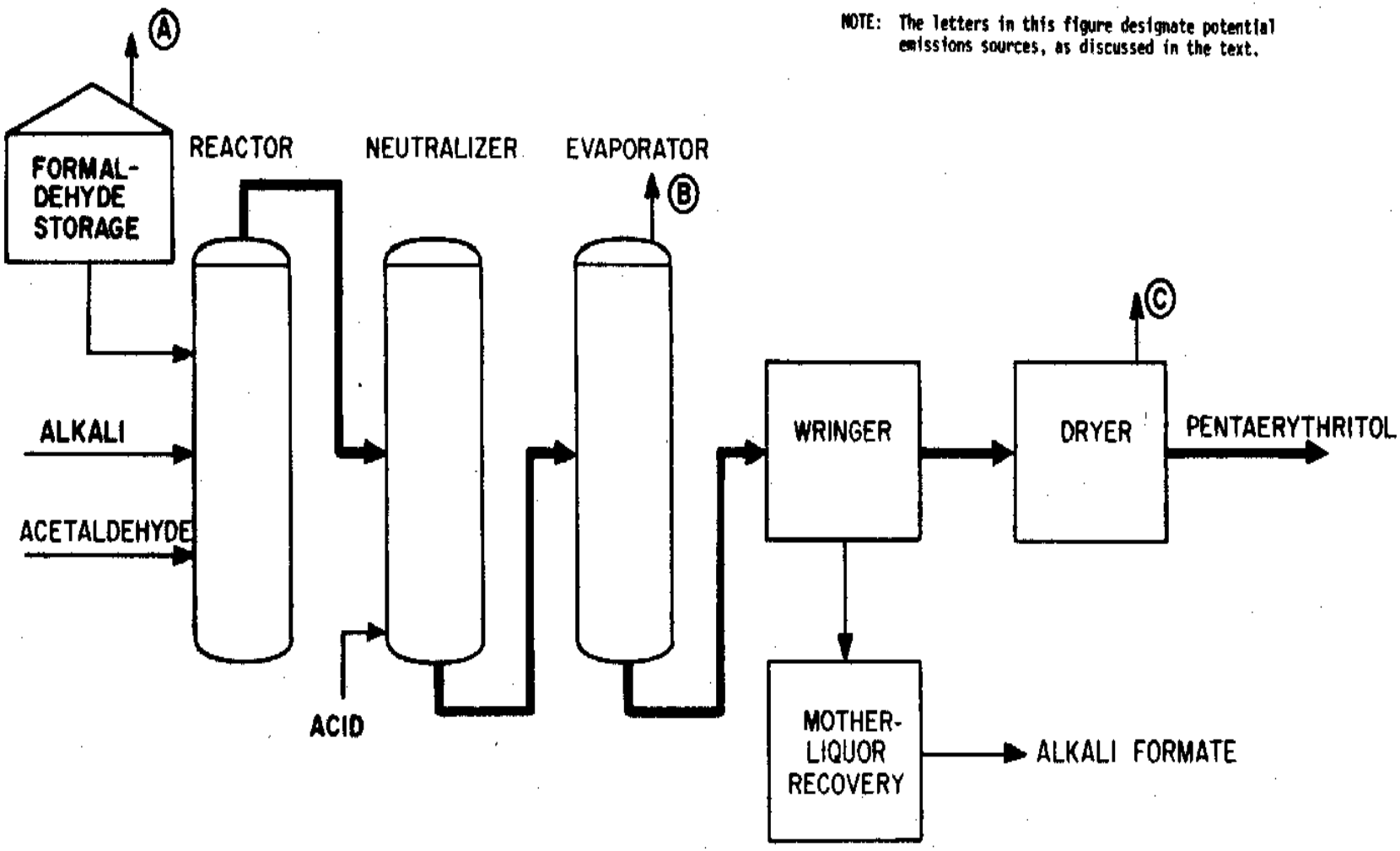

Figure 10. Basic operations that may be used in the production of pentaerythritol.[21]

is then added to the mixture and an exothermic reaction takes place. External cooling is used to control the temperature at about 25°C for several hours, and it is then raised to about 60°C.[21]

When the aldehyde content of the mixture is less than 0.l percent, the reaction mixture is fed to the neutralizer tank where formic acid, sulfuric acid, or oxalic acid is added to neutralize the excess alkali. The acid also reacts with the metallic ion of the alkali solution to form a salt, which can be removed by filtration.[21]

Next, the solution is fed to an evaporator, where water is removed to achieve a specific gravity of about 1.27. Lowering the temperature results in the crystallization of pentaerythritol, which is removed from the slurry by filtration. The mother liquor is fed to a recovery system.[21]

The filter cake can be dried to yield a technical grade of the product or it may be purified further by conventional methods. Byproducts of the reaction include polypentaerythritols (mainly dipentaerythritol and tripentaerythritol) and linear and cyclic formals of the various pentaerythritols. Based on acetaldehyde, the process yield is 85 to 90 percent pentaerythritol including polypentaerythritols.[21]

Emissions

Formaldehyde may be emitted from formaldehyde storage (Vent A in Figure 10), from the evaporator (Vent B), and from the drier vents (Vent C).23 Formaldehyde emission factors from the production of pentaerythritol have been estimated as follows:[8,12]

- **S** Process--1.3 to 2.7 kg/Mg of 37 percent formaldehyde used;
- **S** Formaldehyde Storage--0.002 to 0.33 kg/Mg of 37 percent formaldehyde used; and
- **S** Fugitive--0.14 to 0.15 kg/Mg of 37 percent formaldehyde used.

No information was available on the basis of these estimates or types of control involved. Pentaerythritol production plants may vary in configuration and level of control. The reader is encouraged to contact plant personnel to confirm the existence of emitting operations and control technology at a particular facility prior to estimating its emissions.

Source Locations

Major producers of pentaerythritol and their production locations are listed in Table 10.

TABLE 10. PRODUCTION OF PENTAERTHRITOL[16]

Manufacturer	Location
Celanese Corp.	
Celanese Ceh. Corp., Inc.	Bishop, TX
Hercules Inc.	
Operations Div.	Louisana, MO
Internat'l Minerals & Chem. Corp.	
IMC Chem. Group	
Indust. Chems. Div.	Seiple, PA
Perstorp Inc.	Toledo, OH

Note: This listing is subject to change as market conditions change, facility ownerships change, plants are closed down, etc. The reader should verify the existence of particular facilities by consulting current listings and/or the plants themselves. The level of formaldehyde emissions from any given facility is a function of variables such as capacity, throughput, and control measures and should be determined through direct contacts with plant personnel.

1,4-BUTANEDIOL PRODUCTION

1,4-Butanediol is used primarily in the production of tetrahydrofuran and polybutylene terephthalate.[10]

Process Description

1,4-Butanediol, also known as 1,4-butylene glycol, is produced by a two-step process. The first step involves the high-pressure reaction of acetylene and aqueous formaldehyde solution to form 1,4-butynediol.[24] In the second step, 1,4-butynediol is hydrogenated to form 1,4-butanediol. Excess hydrogen is added during the exothermic hydrogenation reaction to control the reaction temperature.[25]

Emissions

Formaldehyde emission factors from the production of l,4-butanediol have been estimated as follows:[8,12]

- Process--Z-0.74 kg/Mg of 37 percent formaldehyde used;
- Formaldehyde Storage--0.005 to 0.2 kg/Mg of 37 percent formaldehyde used; and
- Fugitive--0.005 to 0.2 kg/Mg of 37 percent formaldehyde used

No information was available on the basis of these estimates or types of controls involved. Reference 12 indicates that process emissions will be eliminated if flared.

1,4-Butanediol production plants may vary in configuration and level of control. The reader is encouraged to contact plant personnel to confirm the existence of emitting operations and control technology at a particular facility prior to estimating its emissions.

Source Locations

Major producers of l,4-butanediol and their locations are listed in Table 11.

TRIMETHYLOLPROPANE

Trimethylolpropane is used primarily in the production of urethane coatings and resins. It is also used in some synthetic lubricants.[10]

Process Description

Trimethylolpropane is also known as hexaglycerol. There is little published information available on the processes used in the production of this chemical. Trimethylolpropane can be produced by the reaction of n-butyraldehyde with formaldehyde and alkali.[24]

TABLE 11. PRODUCTION OF 1,4-BUTANEDIOL[16]

Manufacturer	Location
BASF Wyandotte Corp. Indust. Chems. Group Intermediate Chems. Div.	Geismar, LA
E.I. DuPont de Nemours & Co., Inc. Chems. and Pigments Dept.	La Porte, TX
GAF Corp. Chem. Products	Calvert City, KY Texas City, TX

Note: This listing is subject to change as market conditions change, facility ownerships change, plants are closed down, etc. The reader should verify the existence of particular facilities by consulting current listings and/or the plants themselves. The level of formaldehyde emissions from any given facility is a function of variables such as capacity, throughput, and control measures and should be determined through direct contacts with plant personnel.

Emissions

Formaldehyde emission factors from the production of trimethylolpropane have been estimated as follows:[8]

- -- Process--0.074 kg/Mg of 37 percent formaldehyde used;
- -- Formaldehyde Storage--0.01 kg/Mg of 37 percent formaldehyde used; and
- -- Fugitive--0.01 kg/Mg of 37 percent formaldehyde used.

No information was available on the basis of these estimates or types of controls involved. Trimethylopropane production plants may vary in configuration and level of control. The reader is encouraged to contact plant personnel to confirm the existence of emitting operations and control technology at a particular facility prior to estimating its emissions.

Source Locations

Major producers of trimethylolpropane, which are published in the SRI Directory of Chemical Producers for 1983, are listed below:[16]

- -- Witco Chem. Corp.
  Organics Div. Houston, TX
- -- Atlantic Richfield Co.
  Anaconda Indust. Div.
  Aluminum Div. West Chester, PA

This listing is subject to change as market conditions change, facility ownership changes, plants are closed down, etc. The reader should verify the existence of particular facilities by consulting current listings and/or the plants themselves. The level of formaldehyde emissions from any given facility is a function of variables such as capacity, throughput, and control measures and should be determined through direct contacts with plant personnel.

4,4-METHYLENEDIANILINE PRODUCTION

4,4 1-Methylenedianiline (MDA) is formed by condensation of aniline and formaldehyde. MDA is usually converted into methylenediphenyl isocyanate (MDI) by phosgenation of the MDA salt.[23] MDI is used in the production of polyurethanes for reaction injection molding in the automobile industry.[10]

Process Description

The production of MDA is a two-stage process. First, aniline is neutralized with concentrated hydrochloric acid in aqueous solution at 100°C to form aniline hydrochloride. This solution is cooled to 15°C, a 40 percent formaldehyde solution is added, and the resulting mixture is then heated at 55 to 60°C for 4 hours. The reaction mixture is chilled again, and the product is precipitated out with dilute ammonium hydroxide.

TABLE 12. PRODUCTION OF 4,4-METHYLENDIANILINE[14,16]

Manufacturer	Location
ICI Americas Inc.	
Rubicon Chems. Inc., subsid.	Geismar, LA
Olin Corp.	
Olin Chems. Group	Moundsville, WV
Uniroyal Inc.	
Uniroyal Chem., Div.	Naugatuck, CT
The Upjohn Co.	
Polymer Chems. Div.	La Porte, TX

Note: This listing is subject to change as market conditions change, facility ownerships change, plants are closed down, etc. The reader should verify the existence of particular facilities by consulting current listings and/or the plants themselves. The level of formaldehyde emissions from any given facility is a function of variables such as capacity, throughput, and control measures and should be determined through direct contacts with plant personnel.

The product may be purified further by recrystallization from alcohol or water.[22]

Emissions

No formaldehyde emission sources or formaldehyde emission factors are reported in the available literature for the MDA production process.

Source Locations

Major producers of MDA and their production locations are listed in Table 12.

PHTHALIC ANHYDRIDE PRODUCTION

Production of phthalic anhydride is achieved by the catalytic air oxidation of o-xylene or naphthalene. Formaldehyde and other oxygenated compounds are produced as a byproduct of this reaction.

Process Description

Basic operations that may be used for the production of phthalic anhydride are presented in Figure 11.[26] Either naphthalene or o-xylene is fed to a reactor and converted, with air, to phthalic anhydride by vapor-phase oxidation in the presence of a vanadium pentoxide catalyst.[22] The gaseous product is condensed and dehydrated to remove water formed during the reaction. The crude phthalic anhydride is then stripped of light ends and distilled under vacuum for final purification.

Emissions

The main process waste gas from the phthalic anhydride condensers (Source A in Figure 11), may contain a small amount of formaldehyde and is controlled either by a scrubber-incinerator combination or by direct incineration. The latter method has the advantage of providing control of carbon monoxide as well as the organic species in the waste gas. Use of direct incineration has been reported at an o-xylene-based plant.[27]

The uncontrolled formaldehyde emission factor from the phthalic anhydride switch condensers and the controlled formaldehyde emission factor from the direct incineration control system are estimated as follows:[27]

- -- Uncontrolled -- 2.1 kg/Mg of phthalic anhydride
- -- Controlled -- 0.074 kg/Mg of phthalic anhydride

Phthalic anhydride production plants may vary in configuration and level of control. The reader is encouraged to contact plant personnel to confirm the existence of emitting operations and control technology at a particular facility prior to estimating its emissions.

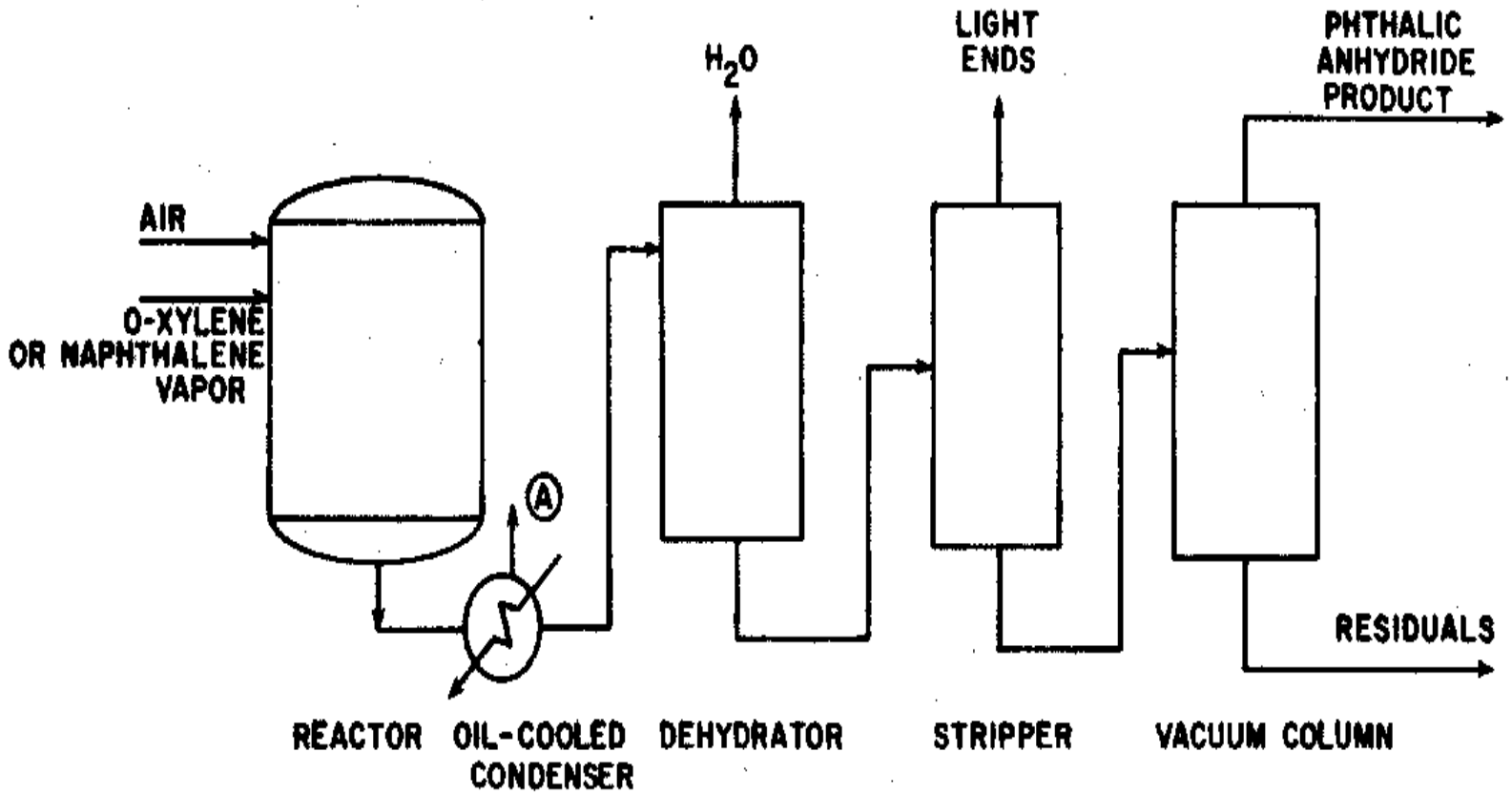

NOTE: The letters in this figure designate potential emissions sources, as discussed in the text.

Figure 11. Basic operations that may be used in the production of phthalic anhydride[26]

Source Locations

Major phthalic anhydride producers and their locations are listed in Table 13.[16]

USE OF FORMALDEHYDE-BASED ADDITIVE'S IN SOLID UREA AND UREAFORM

Formaldehyde is used in the production of conditioning agents for solid urea and in the production of ureaform fertilizers. Solid urea is used as a fertilizer, as a protein supplement in animal feeds, and in plastics manufacturing.

Solid urea is produced by first reacting ammonia and CO_2 to form an aqueous urea solution. This solution is sold as an ingredient in nitrogen-solution fertilizers or further concentrated to produce solid urea. Urea solids are produced from the concentrated solution by two methods: prilling and granulation.[28] Prilling is a process by which solid, nearly spherical particles are produced from molten urea. Molten urea is sprayed from the top of a prill tower, and as the droplets fall through a countercurrent air flow, they cool and solidify into nearly spherical particles. There are two types of prill towers: fluidized bed and nonfluidized bed. The major difference between these towers is that a separate solids cooling operation may be required to produce agricultural-grade prills in a nonfluidized bed prill tower.[29]

Granulation is more popular than prilling in producing solid urea for fertilizer. There are two granulation methods: drum granulation and pan granulation. In drum granulation, solids are built up in layers on seed granules in a rotating drum granulator/cooler approximately 14 feet in diameter. Pan granulators also form the product in a layering process, but different equipment is used. Pan granulators are not common in this country.[30]

Just prior to solids formation, formaldehyde-based additives (FBA's) are injected into the liquid or molten urea to harden the product, reduce dust generation during handling, and provide anticaking properties for storage. The two most commonly used FBA's in the fertilizer industry are formalin and urea-formaldehyde (U-F) concentrates. Formalin is an aqueous formaldehyde solution stabilized with methanol, whereas U-F-concentrates are a solution of 25 weight percent urea, 60 weight percent formaldehyde, and 15 weight percent water. Upon injecting FBA into the liquid or molten urea, formaldehyde reacts with urea to form methylenediurea (MDU), which is the

TABLE 13. PRODUCTION OF PHTHALIC ANHYDRIDE[16]

Manufacturer	Location	Raw material
Badische Corp.	Kearny, NJ	Purchased o-xylene
Exxon Corp.		
Exxon Chem. Co., Div.		
Exxon Chem. Americas	Baton Rouge, LA	Transferred o-xylene from Baytown, TX
Koppers Co., Inc.		
Organic Materials Group	Bridgeville, PA	Desulfurized coal-tar naphthalene
	Cicero, IL	Purchased o-xylene or naphthalene
Monsanto Co.		
Monsanto Indust. Chems.	Texas City, TX	Purchased and transferred o-xylene
Monsanto Polymer Products	Bridgeport, NJ	Petroleum naphthalene
Stapan Chem. Co.		
Surfactant Dept.	Millsdale, IL	Purchased o-xylene
United States Steel Corp.		
USS Chems., Div.	Neville Island, PA	Desulfurized coat-tar naphthalene

NOTE: This listing is subject to change as market conditions change, facility ownership changes, plants are closed down, etc. The reader should verify the existence of particular facilities by consulting current listings and/or the plants themselves. The level of formaldehyde emissions from any given facility is a function of variables such as capacity, throughput, and control measures and should be determined through direct contacts with plant personnel.

true conditioning agent. FBA is usually added to urea at a level of 0.3 to 0.5 weight percent formaldehyde.[31]

Ureaform is a slow-release fertilizer produced from a mixture of urea, U-F-concentrate, sodium hydroxide, and water. The reaction to produce ureaform is initiated by adding acid, forming a wide distribution of methylene-urea polymers, similar to the MDU in solid urea. The initial concentration of formaldehyde in the ureaform process is much higher than in solid urea production.[31]

Test data have indicated that formaldehyde is emitted during the urea solids production process as presented in Table 14.[32,33] However, these data were collected by the chromotropic analysis method, which is not selective for free formaldehyde. Thus, the test results show the total formaldehyde present, both in free form or tied up in chemical compounds such as MDU. Reference 31 indicates that some free formaldehyde may be emitted during the transfer of FBA's to the urea process or during maintenance operations on equipment containing or contaminated with FBA's.

Emission sources include fluidized bed prilling and drum granulation operations. Uncontrolled emission rates from prill towers may be affected by factors such as product grade being produced (agricultural or feed grade), air flow rate through the tower, type of tower bed, and ambient temperature and humidity. Uncontrolled emissions per unit of production are usually lower for feed-grade prills than for agricultural-grade prills due to lower airflows.[29]

Emission rates from drum granulators may be affected by parameters such as rotation rate of the drum, product size, recycle rate of seed material, bed temperature, solution spray pressure, and airflow rates through the drum.[30] Controlled emission factors in Table 14 are for prill towers and granulators controlled with wet scrubbers.[33]

Emission estimates for formaldehyde from ureaform production were not available. Producers of urea-formaldehyde concentrates, which are used in the manufacture of solid urea and ureaform, were reported for 1978 as follows:[10]

- Getty Oil Co. (Hawkeye Chemical Co.)
- Hercules, Inc.
- Kaiser Aluminum & Chemical Corp.
- Lebanon Chemical Corp.
- O.M. Scott & Sons
- W.R. Grace & Co.

TABLE 14. FORMALDEHYDE EMISSIONS FACTORS FOR SOLID UREA PRODUCTION[a] [32,33]

Emission source	Uncontrolled formaldehyde emission factor[b,c] (kg/Mg)	Percent control efficiency[d]	Controlled formaldehyde emission factor[b,c] (Kg/Mg)
Fluidized bed prilling			
agricultural grade	0.0095	95.4	0.0004
feed grade	0.0020	74.8	0.0005
Drum granulation	0.0055	50.2	0.0027

[a] Any given solid urea production plant may vary in configuration and level of control. The reader is encouraged to contact plant personnel to confirm the existence of emitting operations and control technology at a particular facility prior to estimating its emissions.

[b] These data were collected by the chromotropic analysis method, which is not selective for free formaldehyde. Thus, these emissions factors are for total formaldehyde present, whether in free form or tied up in chemical compounds such as methylenediurea (MDU).

[c] Emission factors refer to kilograms of formaldehyde emitted per megagram of solid urea produced.

[d] Control efficiencies are for wet scrubbers.

Producers of formaldehyde, which is usually sold as an aqueous solution called formalin, are listed previously in Table 4.

MISCELLANEOUS RESIN APPLICATIONS

General

Resins produced from formaldehyde find a wide range of applications. Over 65 percent of U-F resins are used as adhesives in the production of particleboard, medium-density fiberboard, and hardwood plywood. The U-F resins are also used to produce home insulation, which accounted for over 6 percent of the resin use in 1977. Other uses of U-F resins are in the textile, paper, and coatings industries and for adhesives for applications outside the construction industry. These other uses each account for less than 5 percent of the U-F resins produced.[34] Almost 50 percent of phenol-formaldehyde (P-F) resins are used in the production of structural wood panels (soft plywood, oriented strandboard) and molding compounds. About 17 percent of P-F resins are used as binders in the production of insulation. Other uses are in the production of foundry molds, laminates, particleboard, friction materials, and abrasives. Each of these other uses accounts for less than 8 percent of the P-F resin produced.[10]

Polyacetal resins are used to produce a large variety of parts for automobiles, plumbing fixtures, hardware, lawn and garden equipment, and sporting goods. A new area of possible application is molding for seat backs in automobiles.[10]

Approximately 60 percent of the melamine-formaldehyde (M-F) resins produced are used for high-pressure laminates such as counter and table tops. The M-F resins are also compression molded to form dinnerware. The M-F resins are used in coatings for automobiles, appliances, and metal surfaces of other products. There is increasing use of methylated and butylated M-F resins in place of solvent-based coatings.[10]

Emissions

Phenol-formaldehyde and polyacetal resins are fairly stable in the presence of normal heat and water. The U-F resins have a tendency to decompose in the presence of normal heat and moisture to produce formaldehyde gas.[10] No information was available on the stability of M-F resins.

Formaldehyde emissions occur during resin applications in production processes as well as during the use of products that contain these resins. For example, the use of U-F resins in the

production of paneling and furniture often results in emissions of formaldehyde in the factories where these products are made. Offgasing of formaldehyde may also occur during the use of these products by consumers. One source reports that most of the unreacted formaldehyde is removed during the manufacture of the products;[35] however, chronic emissions may occur after the excess free formaldehyde is removed as the urea-formaldehyde resins hydrolyze slowly in contact with moisture.[36,37] A series of tests on various consumer products showed the most potential for formaldehyde release from pressed-wood products (particleboard and plywood) and much less potential from new unwashed clothes, fiberglass insulation products containing formaldehyde resins, paper products, fabrics (cotton, nylon, olefin, and blended), and foam-backed carpets.[37]

Pressed-wood Manufacturing--

Emissions from pressed-wood products result as compounds in the resin used to bind the chips evaporate when heated. These emissions usually exit through exhaust fans mounted on the roof above the presses. Georgia Pacific's hardboard plant in Lebanon, Oregon, is the only plant in the country attempting to control emissions from the press vents. A spray chamber containing 80 spray nozzles continuously sprays the exiting press vent gases with water to remove fine particulate matter from the exhaust gas. The spray chamber, installed in 1972, has never been tested, so no information is available regarding pollutant removal efficiencies.

The type of resin used and, thus, the compounds present in its formulation vary depending upon the type of panel being manufactured. The U-F resins are primarily used in the production of particleboard and medium-density fiberboard. These panels typically contain 8 to 9 percent (w/w) resin. The U-F resin is used in applications where the final product will not be subject to weathering. The P-F resins are used in the production of particleboard, waferboard (WB), and oriented strand board (OSB). Structural particleboard made with P-F resins contains approximately 7 percent (w/w) resin, and WB and OSB contain approximately 2 percent (w/w) resin. The P-F resins are more resistant to moisture than U-F resins.

The National Council of the Paper Industry for Air and Stream Improvement (NCASI) published two technical bulletins in 1986 that investigated the release of formaldehyde from press vents in the wood panelboard industry.[38,39] One NCASI study concluded that three major factors affect the release of formaldehyde from press vents: (1) the excess formaldehyde

content of the resin, (2) the amount of resin used, and (3) the press temperature.[38] These factors are discussed below.

Excess formaldehyde is the amount of formaldehyde in the resin in excess of the amount required for stoichiometric reaction with the urea or phenol in the resin. The emission rates have been shown to increase in proportion to the increase in the free formaldehyde content of the resin. The excess or free formaldehyde contents of resins are often held proprietary by resin manufacturers. NCASI showed that where such information was available, the data indicated that 5 to 15 percent of the excess formaldehyde in the panelboard was emitted during the pressing and board cooling operations.[38]

One method to determine the potential of resins to emit formaldehyde during particleboard manufacture would be to use the excess formaldehyde content of the resin (calculated on the basis of the amount of formaldehyde in excess of the amount needed to react stoichiometrically with the other reactive constituents in the resins). However, resin manufactures will not divulge sufficient information about their resins to allow these calculations to be made.

The NCASI study showed that the emission rate of formaldehyde increased in proportion to the amount of resin used in the panelboard and the press temperature. The formaldehyde emission factors ranged between 0.30 and 0.75 lb/thousand square feet of product using U-F resin.[38]

The NCASI study also showed that the formaldehyde emissions from particleboard press vents are related to the amount of excess formaldehyde in the unpressed boards loaded into the press. It would appear that formaldehyde emission rates could be reduced by using less excess formaldehyde in the resin.

The industry has already decreased the amount of excess formaldehyde in resins in order to reduce the emissions of formaldehyde from the finished product into the living or work space. This reduction of excess formaldehyde in the resin also resulted in longer press times and, hence, reduced production rates.

In an effort to eliminate the potential for formaldehyde emissions, methylene diphenyldiisocyanate (MDI) resins have been used by some manufacturers. The MDI resins produce a higher-strength panel than do the U-F or P-F resins. Therefore, manufacturers are able to use less MDI resin to meet the industry's product standards. However, MDI resins are much more expensive than U-F or P-F resins, and panels produced with

MDI resins tend to stick to the presses. Two approaches have been used to prevent the panels from sticking. One is to spray the presses lightly with an antisticking agent between press cycles. Another approach is to use U-F or P-F resins to bind the material on the two outer surfaces of the panel. The core of the panel is bound with the MDI resin. This reduces the amount of formaldehyde available to volatilize, and the panel retains the structural strength provided by the MDI resin.

Two recent tests for VOC emissions at Louisiana Pacific plants shed some light on the level of VOC emissions that might be expected from press vents.[40]

VOC EMISSION FACTORS FOR PRESS VENTS[40]

Plant	Resin	VOC emission factor, lb VOC/ton product
Hayward, Wis.	100 percent MDI	0.36
Sagola, Mich.	50 percent liquid P-F for surface and 50 percent MDI for the core	0.56

This data can be used to estimate VOC emissions for 100 percent P-F resin, since data collected by Interpoll Labs has shown that the MDI is not volatilized. This being the case, the 100 percent MDI test VOC emission factor is indicative of the VOC's emitted from the wood itself (E_w), and the 50:50 test corresponds to the VOC's emitted from the wood and from the P-F resin in the surface (E_s). The general relationship is shown below:

$$E_t = E_w + E_c + E_s + E_{MDI},$$

where:

E_t = total VOC emission factor;

E_w = VOC emission factor due to VOC's emitted from the wood;

E_c = VOC emission factor due to VOC's emitted from P-F resin in the core;

E_s = VOC emission factor due to VOC'S emitted from P-F resin on the surface; and

E_{MDI} = VOC emission factor due to volatilization of MDI = 0. In the case where 100 percent MDI was used:

$$E_c = E_s = E_{MDI} = 0,$$

and thus:

$$0.36 = E_w + 0 + 0 + 0$$

$$E_w = 0.36 \text{ lb VOC/ton product.}$$

This is equivalent to saying that the use of 100 percent MDI allows estimation of the base VOC emission factor for the wood in the board. A plant using 50 percent MDI (in the core) and 50 percent P-F resin (on the surface) is represented in terms of the general equation as follows:

$$0.56 = E_w + E_c + E_s.$$

Since $E_w = 0.36$ and $E_c = 0$ because MDI was used in the core, then:

$$0.56 = 0.36 + 0 + E_s, \text{ and}$$

$$E_s = 0.20 \text{ lb VOC/ton product.}$$

Now, if it may be assumed that $E_c \leq E_s$ (which is a very safe assumption, since loss of P-F from the core is much less likely than loss of P-F from the surface of the waferboard), then the total VOC emission factor where 100 percent P-F is used may be calculated as follows:

$$E_t = E_w + E_c + E_s,$$

where:

$E_w = 0.36;$
$E^s = 0.20;$
$E_c \leq 0.20;$
$E_t = 0.36 + 0.20 + \leq 20.20$, and
$E_t \leq 0.76$ lb VOC/ton product.

This analysis suggests that use of MDI resins instead of P-F resins would result in a reduction of at least 50 percent in VOC emissions.

In addition to press vents, wood furnish dryers are also sources of formaldehyde emissions. In a study by NCASI designed to determine the emission rates of formaldehyde and other compounds emitted from wood furnish dryers, a range of typical emission factors were developed for use in preparing emission estimates for air discharge permits.[41] The study indicates that the concentration of formaldehyde in the dryer exhaust is a function of the dryer inlet temperature. The

formaldehyde emission rate at dryer inlet temperatures below 900°F was less than 0.085 lb/ton of product. At inlet temperatures above 1000°F, the formaldehyde emission rates ranged from 0.01 to 1.1 lb/ton of product.

Furniture Manufacturing--

In the absence of furniture plant formaldehyde emissions data, the available range of particleboard manufacturing formaldehyde emissions data may be used to predict a worst-case formaldehyde emissions estimate for furniture manufacturing. This estimate is possible because both industries use similar U-F adhesive resins and both utilize board pressing operations at elevated temperatures and pressures.

However, in furniture plants it is possible that a smaller percent of the excess formaldehyde in the adhesive resin is emitted than in particleboard plants. Formaldehyde emissions from furniture plants are probably lower because: (1) presses in furniture plants operate at much lower temperatures, (2) furniture presses have somewhat shorter cycle times than those in particleboard plants, and (3) the physical configuration of furniture pieces is different than that of particleboards. (In a furniture piece, a veneer barrier protects the major glue surface from direct exposure to air, while no such continuous barrier inhibits formaldehyde evaporation during the particleboard pressing cycle.)[42]

Urea-formaldehyde Foam Insulation Manufacturing--

Formaldehyde may evolve from urea-formaldehyde foam insulation (UFFI) used in residential applications. The insulation is formed by the combination of the resin with a foaming agent and air, producing a liquid foam that is sprayed into the outer walls of existing homes. The foam fills the space between the walls and hardens in less than a minute.[9] Formaldehyde is released during foaming due to excess formaldehyde in the U-F resins and continues to be emitted long after hardening due to hydrolytic decomposition of the UFFI. One series of tests demonstrated significant potential for formaldehyde emissions at least 16 months after initial UFFI installation.36 In 1982, the Consumer Products Safety Commission (CPSC) placed a ban on the use of UFFI. However, the ban was overturned in August 1983 and CPSC declined to appeal it.[44]

Sufficient information was not found to estimate emission rates from resin and resin product uses in actual applications.

Source Locations

SIC codes for miscellaneous manufacturing applications of resins are listed in Table 15.

MANUFACTURING MINOR PRODUCTS USING FORMALDEHYDE AS A FEEDSTOCK

General

Formaldehyde is used in a wide range of industrial and consumer applications. Because formaldehyde is somewhat unstable in its pure monomeric form, it is usually converted to a variety of forms including a solid polymer (paraformaldehyde), formaldehyde/water solutions called formalin, and formaldehyde/alcohol solutions called Formcels®. Much of formalin is used by the textile, leather, and dye industries. Because of its lighter weight and lower shipping costs, much of the paraformaldehyde is used in industrial applications in plants that are located at long distances from a formaldehyde producer.

One of the minor uses of formaldehyde is in the production of chelating agents such as nitrilotriacetic acid (NTA) and ethylenediaminetetraacetic acid (EDTA). Chelating agents are chemicals used in the manufacture of consumer products such as detergents, water softening chemicals, and fertilizers.[10]

Pyridine manufacture is an important consumer of formaldehyde. Pyridine is used as a solvent in the manufacture of some pharmaceuticals and as an intermediate chemical in the production of other pharmaceuticals such as antihistamines. It is also used in the rubber industry as an accelerator and in the textile industry for waterproofing fabrics. Under normal conditions, pyridine chemicals will not emit formaldehyde.[10]

Small quantities of formaldehyde are used to convert certain compounds to diols. A typical example is the condensation of nitromethane with formaldehyde to give 2-nitropropane-3, 3-diol, which can be brominated to 2-bromo-2-nitropropane-l, 3-diol, an antimicrobial preservative used in some consumer products such as aerosol insecticides. These condensation products formed from nitroparaffins and formaldehyde regenerate formaldehyde in the presence of alkali.[10]

A small amount of formaldehyde is used to produce sodium formaldehyde bisulfite and sodium formaldehyde sulfoxylate for use in making dyes for the textile industry.[10]

TABLE 15. STANDARD INDUSTRIAL CLASSIFICATION CODES FOR MANUFACTURING PROCESSES ENGAGED IN RESIN APPLICATIONS[44]

Resin and use	SIC code
Urea-Formaldehyde	
Particleboard	2492
Fibreboard	2661
Interior plywood	2435, 2436
Foam insulation	1742,2899(insulating compounds)
Textiles	22, 23
Paper	26
Surface coatings	2641, 2851, 3479
Adhesives	2891
Phenol-Formaldehyde	
Outdoor plywood	2435, 2436
Molding compounds	2821
Insulations	2899 (insulating compounds)
Foundry molds	3565
Laminates	2435, 2436, 2439
Particleboard	2492
Friction materials	3499
Abrasives	3291
Polyacetal	
Plumbing fixtures	3079
Hardware	3079
Sporting goods	3949
Melamine-Formaldehyde	
Countertops	2541, 2542
Dinnerware	3079 (dishes, kitchenware)
Surface coatings	2641, 3479

Phenolic resins containing formaldehyde are an additive used in the production of tires. The formaldehyde is believed to remain in the tire as part of the product.[45]

Emissions

Paraformaldehyde has a tendency to decompose and release formaldehyde gas. In most other forms, formaldehyde gas will only be released under extreme conditions such as combustion.[10] No quantitative data are available on formaldehyde emissions from the manufacture of minor products.

Source Locations

Manufacturers of the chemicals discussed above are listed in Table 16.

MISCELLANEOUS COMMERCIAL/CONSUMER USES OF FORMALDEHYDE

General

Formaldehyde is sold directly for consumer or commercial use in several forms, such as in a 37 percent solution (formalin) and in a solid form (paraformaldehyde).

Although only a small amount of formaldehyde use is devoted to consumer and commercial products, its low cost and unique capabilities cause it to be used in a wide variety of products. Formaldehyde is an excellent embalming agent and its preserving capabilities cause it to be routinely used in almost every high school and college biology laboratory. Its capability to control the growth of bacteria is important to many consumer products, and manufacturers add trace amounts of formaldehyde to products that would otherwise support bacterial growth. Formaldehyde is added to cosmetics such as mascara to prevent bacteria from the eye from growing in the unused product.[10]

In the South, where temperatures and humidity are high, paraformaldehyde in small cloth bags is hung in closets to release formaldehyde gas which prevents growth of molds (mildew). Barber shops frequently use dilute solutions of formaldehyde to disinfect scissors and combs. Farmers spray dilute solutions of formaldehyde on animal feeds and seeds to prevent bacterial growth. Some agricultural diseases are controlled by spraying dilute solutions of formaldehyde directly on the ground. Formaldehyde is added to oil well drilling muds to prevent bacterial growth in starches that are added as thickening agents. Some room deodorizers use formaldehyde because of its ability to react with ammonia and hydrogen sulfide and to reduce the sensitivity of one's sense of smell. Some dry cleaning processes use formaldehyde dispersed in cleaning solvents for disinfecting.[10] The textile

TABLE 16. MANUFACTURERS OF MINOR PRODUCTS USING FORMALDEHYDE AS A FEEDSTOCK[16]

Chelating Agents		
- EDTA	Ciga-Geigy Corp.	McIntosh, AL
	Dyestuffs and Chems. Div.	Freeport, TX
	Dow Chem. U.S.A.	
	W.R. Grace & Co.	
	Indust. Chems. Group	
	Organic Chems. Div.	Nashua, NH
	Millmaster Onyx Group	
	Lyndal Chem., div.	Lyndhurst, NJ
	Rockland Indust., Inc.	Middleboro, MA
	Vinnings Chem. Co.	Marietta, GA
- NTA	W.R. Grace & Co.	
	Indust. Chems. Group	
	Organic Chems. Div.	Nashua, NH
	Monsanto Co.	Chocolate Bayou, TX
	Monsanto Indust. Chems. Co.	
Pyridine Compounds	Aldrich Chem. Co., Inc.	Milwaukee, WI
	Nepera Chem. Co.	Harriman, NY
	R.S.A. Corp.	Ardsley, NY
	Reilly Tar & Chem. Corp.	Indianapolis, IN
Nitroparaffin Derivatives	Angus Chem. Co.	Sterlington, LA
Sodium Formaldehyde Bisulfite	Dan River, Inc.	
	Chem. Products Div.	Danville, VA
Sodium Formaldehyde Sulfoxylate	Diamond Shamrock Corp.	
	Chem. Unit	
	Process Chems. Div.	Carlstadt, NJ
	Royce Chem. Co.	East Rutherford, NJ

NOTE: This listing is subject to change as market conditions change, facility ownership changes, plants are closed down, etc. The reader should verify the existence of particular facilities by consulting current listings and/or the plants themselves. The level of formaldehyde emissions from any given facility is a function of variables such as capacity, throughput, and control measures and should be determined through direct contacts with plant personnel.

industry uses finishing agents containing formaldehyde to treat fabric and give it a desired surface effect (i.e., flame resistance, crease-proofing, moth-proofing, water repellency, shrink-proofing).[45]

Electroless plating is a process used for plating surfaces with nickel, copper, or silver that does not employ the use of electrolysis. The process includes etching, neutralizing, catalysis, acceleration, and electroless bath. The electroless bath for copper and silver usually contains formaldehyde which acts as an oxidizing agent. Among the products produced by electroless plating are auto parts, circuit boards, mirrors, and architectural reflective glass. Mirror production is the largest application for electroless silver. There are also a few specialty applications in the electronics industry for electroless gold and platinum.[45] In a 1985/1986 metal finishing industry job shop industry profile the information collected indicated that 22 percent of all job shops in the U.S., or approximately 885 shops, offered electroless plating of one type or another.

Emissions

Only about two percent of the paraformaldehyde produced in the United States is used in consumer products. However, because of the tendency of paraformaldehyde to decompose and release formaldehyde gas, consumer products containing paraformaldehyde will be a source of formaldehyde emissions. In most other forms, formaldehyde gas will only be released under extreme conditions such as combustion.[10] No quantitative data was available on formaldehyde emissions from consumer or commercial uses of formaldehyde.

COMBUSTION SOURCES

Introduction

Formaldehyde is a product of incomplete combustion in most fuel-burning operations and is emitted with other combustion products in the exhaust. The concentration of formaldehyde in exhaust gas from fuel combustion is generally very low, but because of the large amount of fuel consumed, fuel burning accounts for a large quantity of formaldehyde emissions. Because formaldehyde emissions from fuel burning result from incomplete combustion, emissions vary from source to source depending on a number of parameters, such as excess air and flame temperature.

Combustion processes have been grouped into five general categories for the purposes of compiling formaldehyde emission factors. These categories are (1) external combustion in boilers and space heaters, (2) external combustion in industrial process heaters, (3) internal combustion in stationary sources, (4) incineration and open burning, and (5) internal combustion in mobile source. Emissions of formaldehyde from these combustion categories are discussed in the following subsections.

Combustion sources are listed in most emissions inventories, including the National Emissions Data System (NEDS). Guidance is available from EPA on locating combustion sources and determining their design combustion rates and operating schedules.[46,47,48,49,50]

External Combustion--Boilers and Space Heaters

The boiler and space heating category includes steam-electric generating (utility) plants, industrial boilers, and commercial, institutional, and domestic combustion units. These unit are mainly fired by coal, oil, and natural gas. Other fuels used in relatively small quantities include liquefied petroleum gas, wood, coke, and waste and by-product fuels.

Table 17 presents estimates of formaldehyde emissions from external combustion sources. The values presented in the table are based on the results of extensive testing of formaldehyde emissions conducted by the Public Health Service in the early 1960's.[51] As noted above, emissions vary from source to source depending on a number of parameters. Measurements of total aldehyde emissions illustrate the variability that can be expected from source to source in formaldehyde emissions. In comparison with the low formaldehyde levels presented in Table 17, total aldehyde levels (of which formaldehyde is estimated to comprise 70 to 100 percent) as high as 33 ng/J have been reported for coal combustion, up to 40 ng/J for fuel oil combustion, and 7 ng/J for natural gas combustion.[52,53,54]

A few studies have been performed to measure formaldehyde emissions from domestic wood-burning fireplaces and stoves.[55,56,57] Current best estimates indicate that approximately 23.3 $\times 10^6$ metric tons of wood are burned annually in fireplaces and wood stoves. A few formaldehyde measurements were made by DeAngelis et al. on wood-burning fireplaces and stoves.[56] Their data indicated that formaldehyde emissions ranged between 0.1 and 0.4 g/kg of wood burned. They found that wood type and combustion equipment design had very little

TABLE 17. FORMALDEHYDE EMISSIONS FROM EXTERNAL COMBUSTION SOURCES[51]

	Emission factor (ng/J)
Coal fired sources	
Pulverized coal[a]	0.048
Chain grate stoker[b]	0.060
Spreader stoker[c]	0.095
Underfed stoker[d]	0.53
Hand stoked[e]	0.027
Oil-fired sources	
Residual oil[f]	0.069
Distillate oil[g]	0.10
Natural gas-fired sources	
Industrial[h]	0.038
Commercial/institutional[i]	0.095
Domestic[j]	0.43

[a] Based on testing of two units with firing rates of 1,640 GJ/hr and 140 GJ/hr.
[b] Based on testing of a unit with a firing rate of 155 GJ/hr.
[c] Based on testing of a unit with a firing rate of 62 GJ/hr.
[d] Based on testing of two units with firing rates of 4.6 GJ/hr and 3.2 GJ/hr.
[e] Based on testing of a unit with a firing rate of 0.12 GJ/hr.
[f] Based on testing of steam-atomized unit with a firing rate of 15 GJ/hr.
[g] Based on testing of steam-atomized unit with a firing rate of 22 GJ/hr.
[h] Based on testing of a unit with a firing rate of 9.8 GJ/hr.
[i] Based on testing of a unit with a firing rate of 1.0 GJ/hr.
[j] Based on testing of three units with a firing rates of 0.19 GJ/hr, 0.18 GJ/hr, and 0.013 GJ/hr.

effect on formaldehyde release. In another study, Snowden et al. reported emissions of 0.3 to 11g of formaldehyde/kg of wood burned.[57] A study performed by the General Motors Research laboratory indicated that total aldehyde emissions from wood-burning fireplaces varied by a factor of 4 from 0.6 to 2.3 g/kg of wood burned and that formaldehyde emissions ranged from 21 to 42 percent of the total aldehyde emissions.[55] This body of information suggests that nationwide formaldehyde emissions from domestic wood-burning fireplaces and stoves may range from 2.33×10^3 to 2.56×10^5 metric tons per year.

Techniques that are used to mitigate total hydrocarbon and CO emissions from combustion sources also reduce formaldehyde and other aldehyde emissions. These techniques include operating measures to ensure complete combustion as well as periodic burner maintenance and tuning.

External Combustion--industrial Process Heating

In a number of industrial processes, heat requirements are satisfied by direct firing or by process heaters. In direct firing, hot gases from fuel combustion are contacted with the material to be heated. Process heaters are used to heat the material indirectly, either through the walls of a vessel or through a heat exchanger. Indirect contact process heating units are generally fired by natural gas, process gas, fuel oil, or oil-gas mixtures. Direct-fired units, such as rotary kilns, may also use coal.

Emissions of total aldehydes from refinery process heaters fired by oil-gas mixtures have been measured at about 2.2 ng/J.58 Aldehyde emissions from natural gas combustion and oil combustion have been estimated to be 100 percent and 70 percent by weight formaldehyde, respectively.[3] Based on these data, an emission factor of 1.9 ng/J heat input has been derived for formaldehyde emissions for process heaters fueled by oil-gas mixtures. Data were not available to estimate formaldehyde emissions from direct firing. Emissions would vary with the material being heated and may differ significantly from emissions from other combustion sources.

As in the case of other external combustion sources, formaldehyde emissions from industrial process heating are controlled by the same techniques that control total hydrocarbon and CO emissions. These techniques include the use of operating measures that ensure complete combustion as well as periodic burner maintenance and tuning.

Internal Combustion--Stationary Sources

Stationary internal combustion engines are used to generate electricity, to pump gas or other fluids, to compress air for pneumatic equipment, and to compress other gases for industrial processes. These engines include gas turbines and heavy-duty reciprocating engines.

Table 18 presents estimates of formaldehyde emissions from stationary internal combustion engines. Formaldehyde emissions from gas turbines and gas-fired reciprocating engines were estimated using published hydrocarbon emission factors[59] and species characterization data for hydrocarbon emissions from gas turbines and gas-fired reciprocating engines.[60] Emissions from gasoline and diesel oil-fired industrial equipment were estimated based on a published emission factor for total aldehyde[59] and data showing that formaldehyde comprises about 70 percent of total aldehyde emissions from oil-fired combustion sources.[3]

Techniques used to mitigate CO and total hydrocarbon emissions from stationary internal combustion engines would also reduce formaldehyde emissions. These include periodic engine maintenance and tuning.

Incineration and Open Burning

Table 19 presents total aldehyde emission factors for various incinerators and for open burning of waste materials.[3] Data were not available on the fraction of aldehyde emissions made up of formaldehyde; however, formaldehyde has been estimated to comprise 70 to 100 percent of total aldehyde emissions from other combustion processes.[3] The data presented in Table 19 were published between 1959 and 1968. It should be noted that improved incinerator design may have resulted in a reduction of total aldehyde and formaldehyde emission factors from some types of incinerators since these data were collected. Emissions of formaldehyde from incinerators can be reduced with combustion controls, periodic maintenance, and the use of afterburners or additional combustion chambers.

Internal Combustion--Mobile Sources

Mobile internal combustion sources include automobiles, trucks, farm equipment, construction equipment, airplanes, trains, and other vehicles. These sources are generally powered by internal combustion engines fired by gasoline, diesel fuel, or other distillate oil products.

TABLE 18. FORMALDEHYDE EMISSIONS FROM STATIONARY INTERNAL COMBUSTION ENGINES[59,60]

	Formaldehyde emissions		
	ng/Joule heat input	g/hp-hr	g/kWhr
Gas turbines	4.0	0.04	0.04
Gas fired reciprocating engines	5.7	0.04	0.06
Gasoline and diesel-powered industrial equipment	13.2	0.15	0.21

TABLE 19. TOTAL ALDEHYDE EMISSIONS FROM INCINERATION AND OPEN BURNING[a] [3]

	Aldehyde emissions (g/kg)	
	Average	Range value
Apartment incinerators	2.5	1-4
Domestic incinerators	2.0	0.1-8
Backyard burning	5.2	1-14

[a] Data were not available to estimate the fraction of aldehydes comprised by formaldehyde; however, formaldehyde comprises 70 to 100 percent of aldehyde emissions from other combustion processes.

Table 20 presents estimates of formaldehyde emissions from automobiles, locomotives, heavy-duty gasoline and diesel-powered vehicles, motorcycles, snowmobiles, and aircraft. Table 21 lists formaldehyde emission estimates for diesel- and gasoline-powered farm and construction equipment.

Formaldehyde emission values per vehicle mile for automobiles and heavy-duty gasoline and diesel powered vehicles are based on EPA formaldehyde emissions test data.[61,62] Emissions per gallon of fuel burned were derived using average fuel mileages of 16 miles/gallon for automobiles and 50 miles/gallon for motorcycles.[63]

Emission factors for locomotives, motorcycles, snowmobiles, aircraft, and farm and construction equipment were derived from total aldehyde emissions data.[59,64] It has been estimated that formaldehyde makes up 70 percent of total aldehyde emissions from fuel oil combustion and 60 percent of total aldehyde emissions from gasoline and diesel fuel combustion.[3]

Techniques used to mitigate total hydrocarbon and CO emissions from mobile fuel combustion sources also reduce formaldehyde and other aldehyde emissions. These techniques include carburetion adjustment and catalytic conversion of exhaust gas.

OIL REFINING

Formaldehyde is produced as a combustion product in a number of refinery operations. The major sources of formaldehyde emissions from oil refining are catalytic cracking, coking operations, and fuel combustion.

Process Description

Figure 12 shows a basic flow diagram for an oil refinery. Refining operations that are major sources of formaldehyde emissions are described briefly below.

Fuel Combustion--

Process heaters are used in almost every refinery unit operation to heat feed materials or to supply heat in distillation operations. They are designed to provide temperatures up to 510°C and can be fired by refinery fuel gas (usually CO-rich), natural gas, fuel oil, or oil/gas mixtures.

Heat for refinery operations is also provided by steam, which is produced in boilers in the refinery utilities plant. These boilers generally are fired by fuel oil or oil/gas mixtures.

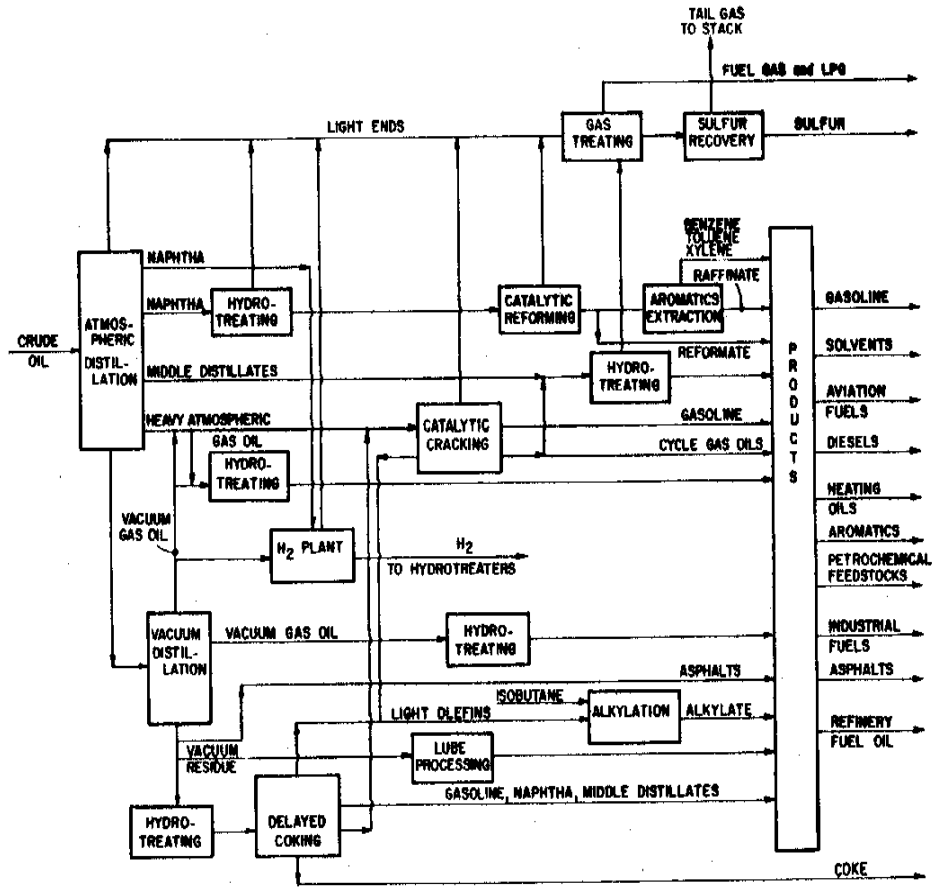

Figure 12. Basic flowsheet for a refinery.

TABLE 20. FORMALDEHYDE EMISSIONS FROM TRANSPORTATION SOURCES

	Formaldehyde emissions	
	g/gal	mg/km
Automobiles[a]		
Catalyst[b]	0.05-0.83	2-32
Noncatalyst[c,d]	0.83	32
Diesel[c]	0.33	13
Other ground transportation		
Heavy-duty gasoline vehicles[c]	0.64	76
Heavy-duty diesel vehicles[c]	0.55	55
Locomotives[e]	1.5	
Motorcycles: 2-cyclee,[f]	3.3	41
4-cyclee,[f]	1.4	17
Snowmobiles[e]	5.9	
Aircraft		
Jet[g]	1.9	
Turboprop or piston[g]	1.6	

[a] An average fuel mileage for automobiles of 16 miles/gal was used to convert from mg/km to g/gal.[63]

[b] Use lower value for newer, low-milage cars and higher value for high-mileage cars.[61,62]

[c] Reference 61.

[d] All cars are tuned to manufacturer's specifications.[61] Malfunctioning vehicles may emit considerably higher levels. [65]

[e] Emissions were calculated using aldehyde emissions data [64] and assuming aldehyde emissions are 60 percent formaldehyde.[3]

[f] An average fuel mileage for motorcycles of 50 mpg was used to convert from mg/km to g/gal.[63]

[g] Emissions were calculated using aldehyde emissions data [64] and assuming aldehyde emissions are 70 percent formaldehyde.[3]

TABLE 21. FORMALDEHYDE EMISSIONS FROM CONSTRUCTION AND FARM EQUIPMENT[a]

	Formaldehyde emissions		
	g/gal	g/hr	g/hp-hr
Gasoline-powered construction equipment			
Wheeled tractor	1.6	4.8	0.15
Motor grader	1.6	5.2	0.17
Wheeled loader	1.3	5.8	0.13
Roller	1.3	4.5	0.15
Miscellaneous	1.2	5.4	0.13
Gasoline-powered farm equipment			
Tractor	1.9	4.2	0.18
Miscellaneous	1.1	2.8	0.13
Diesel-powered construction equipment			
Tracklaying tractor	1.7	7.4	0.10
Wheeled dozer	1.6	17	0.096
Scraper	2.6	39	0.17
Motor grader	1.2	3.3	0.073
Wheeled loader	2.0	11	0.012
Tracklaying loader	1.0	2.4	0.06
Off-highway truck	2.1	31	0.13
Roller	1.7	4.5	0.12
Miscellaneous	1.8	8.3	0.12
Diesel-powered farm equipment			
Tractor	3.3	9.8	0.20
Miscellaneous	2.8	4.3	0.18

[a] Emissions were calculated using aldehyde emissions data[59] and the assumption that aldehyde are 60 percent formaldehyde.[3]

At older refineries, high-pressure compressors are often run by natural gas-fired internal combustion engines. High-pressure compressors are used in hydrodesulfurization, reformation, and other refinery unit operations. Because of their greater reliability, electric motors and steam engines are used at most newer refineries in place of gas-fired engines.[59] The total amount of fuel burned at a refinery depends on the size and complexity of the refinery. The breakdown of fuel use between fuel oil and gas depends on the availability of fuels, the particular requirements of various burners or engines, and applicable environmental (e.g., fuel sulfur) regulations. It is estimated that for a large complex refinery, the total fuel requirement is 230 Gigajoules (GJ) heat input per barrel (bbl) of crude feed, of which on the average about 70 percent is provided by fuel oil combustion and 30 percent by fuel gas combustion.[66]

Catalytic Cracking--

In catalytic cracking, catalysts are used to break down heavy oils to lighter products. Feedstocks to catalytic cracking typically have a boiling range of 340 to 540°C. Catalytic cracking processes currently in use can be classified as either fluidized catalytic cracking (FCC) units or moving-bed catalytic cracking units.[58,59] In both processes, fresh and recycled oil are fed to a cracking reactor with hot regenerated catalyst. The reactor temperature for both processes is 470 to 525°C.

In the FCC process, the oil vaporizes, and the catalyst, made up of very fine particles, becomes entrained in the vapor. The cracking reaction takes place as the fluidized-catalyst/oil-vapor stream flows up a riser in the center of the reactor. The catalyst and oil vapor are separated by cyclones at the top of the reactor. Spent catalyst from the cyclones falls to the reactor bottom where it is steam-stripped to remove adsorbed hydrocarbons before flowing out of the reactor.[59]

In the moving-bed process, catalyst beads (about 0.5 cm in diameter) are fed to the top of the reactor along with a mixed-phase oil feed. Cracking occurs as the catalyst and oil move concurrently downward through the reactor. Hydrocarbons are separated from the catalyst in a zone near the reactor bottom. Spent catalyst is then steam-stripped of adsorbed hydrocarbons and flows out of the reactor.[59]

Oil removed from the FCC catalytic cracking process is fed to a fractionation column, where it is split into gas and liquid product streams and a recycle stream. Spent catalyst in both processes is transferred to a regenerator, where coke deposits are removed from the catalyst surface by partial combustion with air at 590 to 675°C. Regenerated catalyst is separated from combustion products by cyclones and returned to the cracking reactor. Because the combustion process in the regenerator is incomplete, flue gas from the regenerator generally has a high CO concentration. Emissions of CO generally are controlled using CO waste heat boilers. Entrained catalyst particles are generally controlled by electrostatic precipitators (ESP's).[59]

Coking--

Coking involves the thermal cracking of heavy residual oil to form lighter products and petroleum coke. Two types of coking processes are currently in use: fluid coking and delayed coking.

In delayed coking, feed oil is heated to 480 to 580°C in a process heater and then fed to one of two coke drums. Cracking occurs as the oil flows through the heater, and light products are removed as an overhead vapor stream from the drum. Heavy liquids remain in the drum to form coke. The delayed coking process is a batch process. When the drum in use is filled to capacity with coke, the stream from the process heater is fed to the second drum. Meanwhile, coke is removed from the first drum with high-pressure water jets.[66]

In the fluid coking process, feed oil is contacted with hot pellets or seed coke particles in a fluidized bed reactor. The feed oil cracks, forming coke, which remains on the particles, and light products, which flow out of the reactor in an overhead stream. Fluid bed particles are removed continuously from the reactor and circulated through a burner. In the burner, the coke is partially combusted with air. A portion of the coke leaving the burner is removed as product, and the remainder is returned to the reactor. The continuous circulation of reactor bed material through the burner provides heat for the cracking reaction, transferred as sensible heat in the bed material. The reactor temperature is maintained at 525 to 580°C. Flue gas from the fluid coker burner off-gas contains incomplete combustion products including a large amount of CO. Carbon monoxide emissions generally are controlled by passing the flue gas through a CO waste heat boiler.[67]

Emissions

Formaldehyde is emitted with combustion products from refinery process heaters, boilers, and internal combustion compressor engines. These combustion sources are located throughout the refinery. Process vent streams from catalytic cracking and fluid coking operations also contain formaldehyde. These streams are discharged from boilers used to burn CO-rich waste gas streams. In catalytic cracking, the CO-rich waste stream results from the partial air oxidation of catalyst coke deposits, while in fluid coking, the CO stream results from the partial oxidation of the coke burned to provide process heat. There is no corresponding process vent stream from the delayed coking operation. Refinery unit operations include valves, pumps, flanges, and other hardware, all of which emit fugitive hydrocarbons. These hydrocarbons are not, however, expected to contain large amounts of formaldehyde.

Table 22 presents emission factors for catalytic cracking and fluid coking.[58] Emissions from external combustion sources (boilers and process heaters) and internal combustion engines are discussed in the section of this report entitled COMBUSTION SOURCES.

Formaldehyde emission factors presented in Table 22 were derived from emission test data for total aldehydes,[58] using published estimates of the fraction of formaldehyde in aldehyde emissions from various combustion processes. Based on the processes by which aldehydes are formed and the nature of the fuels, aldehyde emissions from natural gas combustion have been estimated in published literature to be 100 percent formaldehyde, and aldehyde emissions from oil combustion have been estimated to be 70 percent formaldehyde.[3] Because the streams entering CO boilers in fluid coking and catalytic cracking operations result from the partial combustion of petroleum coke, aldehyde emissions from these sources are expected to have a formaldehyde content similar to that in aldehyde emissions from oil combustion. Formaldehyde emissions from all of the above sources result from incomplete combustion. Emissions of formaldehyde differ from source to source depending on burner operating conditions, such as excess air and flame temperature. Formaldehyde emissions from combustion sources, like total hydrocarbon emissions, can be mitigated to a certain extent by maintenance of proper operating conditions, including periodic burner maintenance and tuning.

TABLE 22. FORMALDEHYDE EMISSIONS FROM PETROLEUM REFINING[a] [58]

Source	Emission factor
Combustion Sources	
Gas-fired external combustion	
Oil-fired external combustion	
Gas fired reciprocating engine	see COMBUSTION SOURCES
Oil/gas mixture fired process heater	
Catalytic Cracking	
FCC regenerator with CO boiler/ESP	2.2 kg/1000 bbl fresh feed
Moving bed (TCC) regenerator with CO boiler/ESP	1.0 kg/1000 bbl fresh feed
Coking	
Fluid coker burner with CO boiler/scrubber	0.54 kg/1000 gal bbl fresh feed

[a] Petroleum refineries may vary in configuration and level of control. The reader is encouraged to contact plant personnel to confirm the existence of emitting operations and control technology at a particular facility prior to establishing its emissions.

Source Locations

A list of active refineries in the United States is given in Table 23, showing the location of each refinery as well as the total crude oil refining and catalytic cracking and fluid coking capacities, in barrels per stream per day.[66]

ASPHALTIC CONCRETE PRODUCTION AND USE

Asphalt plants or asphaltic concrete plants are used to produce hot mix asphalt paving. this product is a mixture of well graded, high quality aggregate and liquid asphaltic cement which is heated and mixed in measured quantities to produce bituminous pavement material. Hot mix asphalt paving can be manufactured by batch mix, continuous mix, or drum mix process.

In recent years, recycling of old asphalt paving has been intiated in the asphaltic concrete industry. In recycling, old asphalt pavement is broken up at a job site and is removed from the road base. This material is then transported to the plant, crushed, and screened to the appropriate size for further processing. The paving material is then heated and mixed with new aggregate, to which the proper amount of new asphaltic cement is added, to produce a grate of hot asphalt paving suitable for laying.

The most significant source of emisssions from asphalt plants is the rotary dryer. Dryer fules are typically natural gas and oil, including recycled waste oil. Dryer emissions contain the fuel combustion products of the burner and aggregate dust carried out of the dryer by the oving gas stream. These amounts of gaseous volatile organic compound (VOC) of various species, incuding formaldehyde. The formaldehyde emissions are from the incomplete combustion fo the dryer fuel and possibly from the liquid asphaltic cement.[45]

Source tests obtained from a single asphaltic concrete plant indicated that asphalt plants with scrubbers have an average emission factor of 0.00015 pounds per ton of asphaltic concrete produced.[59] For asphalt plants with baghouses an emission factor was developed form four stack tests performed in Wisconsin in 1989. During two of these tests, drum mix sphalt plants were using 40 percent recycle and burning waste oil. For the other two tests, stationary batch plants were using 20 percent recycle with one burning waste oil and the other burning No. 2 oil. the emission rate from these plants ranged from 0.0024 pounds per ton to 0.0071 pounds per ton and average 0.0036 pounds per ton.[45]

TABLE 23. PETROLEUM REFINERIES[68]

Company and Location	Crude refining capacity (bbl/stream/day)	Fluid coking charge capacity (bbl/fresh feed/stream/day)	Catalytic crackling charge capacity (bbl fresh) feed/stream/day)
Alabama:			
Hunt Oil Co. - Tuscaloosa	47,600	-	-
Louisiana Land and Exploration Co. - Seraland	81,300	-	-
Marion Corp. - Theodore	27,000	-	-
Mobile Bay Refining Co. - Chickasaw	20,000[c]	-	-
Warrior Ashphalt Co. of Alabama Inc. - Holt	6,000	-	-
Atlanta:			
Atlantic Richfield Corp. - -Prudhoe Bay	20,000	-	-
Chevron U.S.A., Inc. - Kenai	22,200[c]		
North Pole Refining, Div. of Mapco - North Pole	46,500	-	-
Tesoro Petroleum Corp. - Kenai	51,053	-	-
Arizona:			
Arizona Fuele Corp. - Fredonia	6,500	-	-
Arkansas:			
Berry Petroleum, Division of Crystal Oil Co. - Stevens	4,400	-	-
Cross Oil & Refining Co. of Arkansas - Smackover	9,950	-	-
Macmillan Ring-Free Oil Co. - Norphlet	6,000	-	-
Toaco Corp. - El Dorado	48,000	-	16,000[a]
California:			
Anchor Refining Cl - McKittrick	11,000	-	-
Atlantic Richfield Co. - Carson	213,000	-	58,000[a]
Beacon Oil Company - Manford	18,230	-	-
Chamolin Petroleum Co. - Wilmington	62,500	-	30,000[a]
Chevron U.S.A. Inc. - Bakersfield	26,000[c]	-	-
El Segunde	405,000[c]	-	63,000[a]
Richmond	365,000[c]	-	63,000[a]
Douglas Oil Co. - Santa Maria	10,000	-	-
Eco Petroleum Inc. - Signal Hill	7,000c	-	-
Edgington Oil Cl - Long Beach	44,730	-	-
Exxon Co. - Benicia	112,000	26,000	50,000[a]
Fletcher Oil & Refining Co. - Carson	30,500	-	10,000[a]
Getty Refining & Marketing Co. - Bakersfield	64,700	-	-
Golden Bear Division, Witco Chemical Corp. - Oildale	11,500	-	-
Golden Eagle Refining Co. - Carson	17,200	-	-
Gulf Oil Co. - Santa Fe Springs	53,800	-	15,500[a]
Huntway Refining Co. - Benicia	7,500	-	-
Wilmington	6,000	-	-
Independent Valley Energy Co. - Bakersfield	29,500	-	-
Kern County Refinery Inc. - Bakersfield	23,000	-	-
Marlex Oil & Refining Inc. - Long Beach	20,000	-	-
Mobil Oil Corp. - Torrance	130,000	-	61,000[a]
Newhall Refining Cl - Newhall	23,000	-	-
Oxnard Refinery - Oxnard	5,000	-	-
Pacific Oasie - Paramount	48,000	-	-
Pacific Refining Co. - Hercules	45,000[c]	-	-
Powerine Oil Co. - Santa Fe Springs	46,000	-	13,500[a]
Sabre Refining Inc. - Bakersfield	14,000	-	-
Shell Oil Co. - Martinez	94,000	-	60,000[a]
Wilmington	113,000	-	35,000[a]
Sunland Refining Inc. - Bakersfield	15,000	-	-
Texaco Inc. - Wilmington	78,400	-	28,000[a]
Tosco Corp. - Bakersfield	40,000	7,000	12,000[b]
Martinez	126,000[c]	37,000	47,000[a]
Union Oil Co. of California - Los Angeles	111,000	-	45,000[a]
Rodeo	117,300	-	-
USA Petrocham Corp. - Ventura	30,000	-	-
Colorado:			
Asamera Oil U.S. Inc. - Commerce City	40,000	-	8,000[a]
Conoco Inc. - Commerce City	33,500	-	15,000[a]
Gary Refining Co. - Fruita	14,000	-	-

TABLE 23. PETROLEUM REFINERIES[68] (Continued)

Company and Location	Crude refining capacity (bbl/stream/day)	Fluid coking charge capacity (bbl/fresh feed/stream/day)	Catalytic crackling charge capacity (bbl fresh) feed/stream/day)
Delaware:			
Getty Refining and Marketing Co. - Delaware City	150,000	44,000	62,000[a]
Georgia:			
Amoco Oil Co. - Savannah	27,000	-	-
Young Refining Corp. - Douglasville	-	-	-
Hawaii:			
Chevron U.S.A. Inc. - Barber's Point	48,000[c]	-	22,000[a]
Hawaiian Independent Refinery Inc. - Ewa Beach	67,000	-	-
Illinois:			
Blue Island	60,000	-	25,000[a]
Hartford	50,000	-	27,000[a]
Marathon Oil Co. - Robinson	205,000	-	38,000[a]
Mobile Oil Corp. - Joilet	200,000	-	98,000[a]
Shell Oil Co. - Wood River	295,000	-	94,000[a]
Texaco Inc. - Lawrenceville	88,000	-	34,000[a]
Union Oil Co. of California - Lemont	157,000	-	58,000[a]
Indiana:			
Amoco Oil Co. - Whiting	400,000	-	150,000[a]
Gladieux Refinery Inc. - Ft. Wayne	20,000	-	-
Indiana Farm Bureau Cooperative Association Inc. - Mt. Vernon	22,100	-	8,000[a]
Laketon Refining Corp. - Laketon	9,500	-	-
Rock Island Refining Corp. - Indianapolis	44,500	-	19,000[a]
Kansas:			
Derby Refining Co. - Wichita	30,000	-	10,800[b]
Farmland Industries Inc. - Coffeyville	60,723	-	23,000[a]
Getty Refining & Marketing Co. - El Dorado	82,000	-	31,000[a]
Mobile Oil Corp. - Augusta	54,500	-	22,100[b]
National Cooperative Refinery Association - McPherson	57,000	-	20,000[a]
Pester Refining Co. - El Dorado	32,000	-	14,500[a]
Total Petroleu,m - Arkansas City	47,200	-	18,000[a]
Kentucky:			
Ashland Petroleum Co. - Catlettsburg Louisville	220,000	-	60,000[a]
Somerset Refinery Inc. - Somerset	26,000	-	10,000
	6,000	-	-
Louisiana:			
Atlas Processing Co., Division of Pennzoil - Shreveport	82,500	-	-
Calumet Refining Co. - Princeton	6,500	-	-
Canal Refining Co. - Chrich Point	7,858	-	-
Celeron Oil & Gas - Mermentau	15,000	-	-
Cities Service Co. - Lake Charles	330,000	-	150,000[a]
Claiborne Gasoling Co. - Liebon	6,700	-	-
Conoco Inc. - Lake Charles	164,000	-	30,600[a]
Cotton Valley Refinery (Kerr-McGee Refining Corp.) - Cotton Valley	5,000[c]	-	-
CPI Refining Inc. - Lake Charles	17,500	-	-
Exxon Co. - Baton Rouge	474,000	-	155,000[a]
Gulf Oil Corp. - Belle Chasse	205,000	-	99,000[a]
Hill Petroleum Co. - Krotz Springs	50,000	-	22,500[a]
Kerr McGee Corp. - Dubach	11,000	-	-
Mallard Resources Inc. - Gueydon	6,000[c]	-	-
Marathon Oil Co. - Garyville	263,000	-	75,000[a]
Murphy Oil Co. - Meraux	95,400	-	35,300[a]
Placid Refining Co. - Port Allen	55,000	-	18,500[a]
Port Petroleum Inc. - Stonewall	4,000	-	-
Shell Oil Co. - Norce	225,000	-	100,000[a]
Tennaco Oil Co. - Chelmette	120,000	-	22,500[a]
Texaco Inc. - Convent	147,000	-	70,000[a]

TABLE 23. PETROLEUM REFINERIES[68] (Continued)

Company and Location	Crude refining capacity (bbl/stream/day)	Fluid coking charge capacity (bbl/fresh feed/stream/day)	Catalytic crackling charge capacity (bbl fresh) feed/stream/day)
Maryland:			
Chevron, U.S.A., Inc. - Baltimore	14,947	-	-
Michigan:			
Crystal Refining Co. - Carson City	6,200	-	-
Lakeside Refining Co. - Kalamazoo	5,600	-	-
Marathon Oil Col. - Detroit	71,000	-	27,000[a]
Total Petroleum Inc. - Alma	42,000	-	18,000[a]
Minnesota:			
Ashland Petroleum Co. - St. Paul Park	69,000	-	23,000[a]
Kock Refining Co. - Rosemount	137,000	-	52,600[a]
Mississippi:			
Ameranda-Mass Corp., - Purvie	30,000[c]	7,000	18,000[b]
Chevron, U.S.A. Inc., - Pascagoula	280,000[c]	-	58,000[a]
Ergon Refining Inc. - Vicksburg	22,000	-	-
Natchez Refining Inc. - Natchez	22,000	-	-
Southland Oil Co. - Lumberton	6,500	-	-
Sandersville	12,500	-	-
Montana:			
Camex - Laurel	42,500	-	12,000[a]
Conoco, Inc. - Billings	50,000	-	15,500[a]
Exxon Co. - Billings	46,000	7,000	21,000[a]
Flying J Inc. - Cut Bank	6,200	-	-
Kenco Refining Inc. - Wolf Point	4,950[c]	-	-
Simone Refining Co. - Great Falls	6,500	-	2,100[a]
Nevada:			
Nevada Refining Co. - Tonopah	4,700	-	-
New Jersey:			
Chevron U.S.A. - Perth Amboy	168,000[c]	-	33,000
Exxon Co. - Linden	110,000	-	120,000[a]
Mobil Oil Corp. - Pauleboro	102,200	-	34,000[a]
Seaview Petroleum Inc. - Thorofare	45,000[c]	-	-
Texaco, Inc. - Westville	98,500	-	40,060[a]
New Mexico:			
Giant Industries Inc. - Cinize	19,000	-	7,200[a]
Farmington	14,000	-	-
Navajo Refining Co. - Artesia	29,930	-	17,500[a]
Plateau, Inc. - Bloomfield	18,100	-	5,400[a]
Southern Union Refining Co. - Lovington	36,000	-	-
Thriftway Co. - Bloomfield	7,500[c]	-	-
North Dakota:			
Amoco Oil Co. - Mandan	58,000	-	26,000[a]
Flying J Inc. - Williston	5,400	-	-
Ohio:			
Ashland Petroleum Co. - Canton	68,000	-	25,000[a]
Gulf Oil Co. - Cincinnati	45,000	-	18,000[a]
Standard Oil Co. of Ohio - Lima	177,000	-	37,700[a]
Toledo	126,000	-	55,000[a]
Sun Cl - Toledo	124,000	-	50,000[a]
Oklahoma:			
Allied Material Corp. - Stroud	8,500	-	-
Champlin Petroleum Co. - Enid	56,000	-	19,500[a]
Conoco, Inc. - Ponca City	138,000	-	45,000[a]
Kerr-McGee Refining Corp. - Wynnewood	43,000[c]	-	20,000[a]
Oklahoma Refining Co. - Cyril	15,500	-	7,800[a]
Custer Country	12,500	-	-
Sun Cl - Tulsa	90,000	-	30,000[a]
Tonkawa Refining Co. - Amett	13,000	-	-
Tosco - Duncan	49,500	-	25,000[a]
Total Petroleum Corp. - Ardmore	64,500	-	22,000[a]

TABLE 23. PETROLEUM REFINERIES[68] (Continued)

Company and Location	Crude refining capacity (bbl/stream/day)	Fluid coking charge capacity (bbl/fresh feed/stream/day)	Catalytic crackling charge capacity (bbl fresh) feed/stream/day)
Oregon:			
Chevron U.S.A. Inc. - Portland	15,789	-	-
Pennsylvania:			
Atlantic Richfield Co. - Philadelphia	131,000	-	29,000[a]
BP Oil Corp. - Marcus Hood	177,000	-	48,000[a]
Gulf Oil Co. - Philadelphia	180,000	-	85,300[a]
Kendell-Amalie Division, Witco Chemical Co. - Bradford	9,000	-	-
Penzoil Co. - Rouseville	16,500	-	-
Quaker State Oil Refining Corp. - Farmers Valley	6,800	-	-
Sun Cl - Marcus Hookd	165,000	-	75,000[a]
United Refining Co. - Warren	62,000	-	18,000[a]
Valvoline Oil Co., Division of Ashland Oil Co. - Freedom	7,000	-	-
Tennessee:			
Delta Refining Co. - Memphis	49,000	-	30,000[a]
Texas:			
Amber Refining Co. - Fort Worth	20,500	-	5,000[a]
American Petrofina, Inc. -			
Big Spring	60,000	-	23,500[a]
Port Arthur	110,000	-	34,500[a]
Amoco Oil Co. - Texas City	432,000	-	194,000[a]
Atlantic Richland Co. - Houston	244,000	-	78,000[a]
Champlin Petroleum Co. - Corpus Christi	179,000	-	69,000[a]
Charter International Oil Co. - Houston	70,000	-	50,000[a]
Chevron U.S.A. Inc. - El Paso	76,000[c]	-	22,000[a]
Coastal States Petroleum Co. - Corpus Christi	95,000[c]	-	19,500[a]
Crown Central Petroleum Corp. - Houston	103,000	-	56,000[a]
Diamond Shamrock Corp. - Sunrey	76,440	-	45,000[a]
Dorchester Refining Co. - Mt. Pleasant	265,000	-	9,600[b]
Eddy Refining Co. - Houston	3,500[c]	-	-
Exxon C. U.S.A. - Houston	525,000	-	155,000[a]
Flint Chemical Co. - San Antonio	1,400	-	-
Gulf Oil Co. - Port Arthur	424,000	-	110,000[a]
Howell Hydrocarbone, Inc. - San Antonio	10,000	-	-
Koch Refining Co. - Corpus Christi	108,000	-	27,000[a]
LaGloria Oil & Gas Co. - Tyler	70,000	-	17,000[a]
Liquid Energy Corp. - Bridgeport	10,800	-	-
Marathon Oil Co. - Texas City	72,000	-	38,000[a]
Mobil Oil Corp. - Beaumont	335,000	-	18,000[b]
Phillips Petroleum Co. -			
Borger	100,000	-	60,000[a]
Sweany	195,000	-	87,000[a]
Pride Refining, Inc. - Abilene	36,500	-	-
Quintana Petrochemical Co. - Corpus Christi	34,000	-	-
Saber Energy, Inc. - Corpus Christi	21,000	-	-
Shell Oil Co. - Deer Park	310,000	-	65,000[a]
Odessa	33,500	-	10,500[a]
Sigmer Refining Co. - Three Rivers	49,500	-	17,000[a]
South Hampton Refining Co. - Silabee	17,500	-	-
Southwestern Refining Cl - Corpus Christi	104,000[c]	-	47,000[a]
Tesore Petroleum Corp. - Carrize Springs	27,474	-	-
Texaco, Inc. - Amarille	21,000	-	8,000[a]
El Paso	18,000	-	7,000[a]
Port Arthur	425,000	-	135,000[a]
Port Naches	32,600	-	-
Texas City Refining, Inc. - Texas City	130,000	-	40,000[a]
Uni Refining, Inc. - Ingleside	45,000	-	-
Union Oil Co. of California - Beaumont, Nederland	126,300	-	38,000

TABLE 23. PETROLEUM REFINERIES[68] (Continued)

Company and Location	Crude refining capacity (bbl/stream/day)	Fluid coking charge capacity (bbl/fresh feed/stream/day)	Catalytic crackling charge capacity (bbl fresh) feed/stream/day)
Utah			
Amoco Oil Co. - Salt Lake City	41,500	-	18,000[a]
Caribeau Four Corner, Inc. - Wood Cross	8,400	-	-
Chevron U.S.A. - Salt Lake City	45,000[c]	-	11,000[a]
Crysen Refining Co. - Wood Cross	12,500[c]	-	-
Husky Oil Co. - North Salt Lake City	26,000	-	7,000
Phillips Petroleum Co. - Wood Cross	26,000	-	4,400[b]
Plateau, Inc. - Roosevelt	8,500	-	6,000[a]
Virginia:			
Amoco Oil Co. - Yorktown	55,000	-	28,000[b]
Washington:			
Atlantic Richfield CO. - Ferndale	13,000	-	-
Chevron U.S.A., Inc. - Seattle	5,500[c]	-	-
Mobile Oil Corp. - Ferndale	75,000	-	25,500[b]
Shell Oil Co. - Anacortes	94,000	-	36,000[a]
Sound Refining, Inc. - Tacoma	11,700[c]	-	-
Texaco, Inc. - Anacortes	82,000	-	30,000[a]
U.S. Oil & Refining Co. - Tacoma	24,000[c]	-	-
West Virginia:			
Quaker State Oil Refining Corp. -			
Newell	12,000	-	-
St. Mary's	5,000	-	-
Wisconsin:			
Murphy Oil Corp. - Superior	42,000	-	9,700[a]
Wyoming:			
Amoco Oil Co. - Casper	49,000	-	13,000[a]
Husky Oil Co. - Cheyenne	30,000	9,000	12,000[a]
Little America Refining Co. - Casper	24,500[c]	-	12,500[b]
Mountaineer Refining Cl - LaBarge	700	-	-
Sinclair Oil Corp. - Sinclair	54,000	-	21,000[a]
Wyoming Refining Co. - Newcastle	13,500	-	4,000[b]

Note: This listing is subject to change as market conditions change, facility ownership changes, plants are closed down, etc. The reader should verify the existence of particular facilities by consulting current listings and/or the plants themselves. The level of formaldehyde emissions from any given facility is a function of variables such as capacity, throughput, and control measures and should be determined through direct contacts with plants personnel.

[a] Fluid bed catalytic cracking.
[b] Moving bed catalytic cracking.
[c] Capacity in bbl/calendar day.

In addition to formaldehyde emissions from the production of asphalt, the application of asphalt cement results in the emission of 0.0040 pounds of formaldehyde per ton of asphalt.[45]

FORMALDEHYDE PRODUCTION IN THE ATMOSPHERE VIA PHOTO-OXIDATION

Just as formaldehyde is produced in combustion processes from incomplete oxidation, it is also formed in the atmosphere when gaseous organic materials are oxidized, usually with the aid of sunlight.[69] Several reaction paths exist from such formation. It should be noted that as formaldehyde is produced in the atmosphere, it is also destroyed. This is because formaldehyde is also consumed by photo-oxidation, with the oxidation products eventually becoming carbon dioxide and water.

Since formaldehyde is produced by photo-oxidation in the atmosphere, there are no definable sources of these emissions. The sources of the organic precursors are any and all sources of organic emissions. This list includes, but is not limited to:

- Combustion processes;
- Surface coating applications;
- Pesticide application; and
- Solvent and other VOC evaporative losses.

Prediction or estimation of the amount of formaldehyde produced by photo-oxidation is a complex task. There are several reaction paths, and complex equilibria are involved in each reaction path. Sunlight aids the production of formaldehyde, as does the presence of other atmospheric contaminants such as NO_x.[69] Studies to date have no succeeded in accurately modeling these phenomena. Rather, the studies have used what little experimental data are present to estimate formaldehyde conversion "efficiency factors." These factors represent the fraction of VOC that is converted into formaldehyde. At best, this type of technique yields very approximate estimates. The formaldehyde conversion efficiency factors available in the literature are summarized below:[69]

1. From photo-oxidation of automobile exhaust--formaldehyde formation is calculated by assuming a 30 to 60 percent increase in the initial concentration of formaldehyde (i.e., concentration exiting the exhaust pipe);

2. For California only--technique assumes 1,262 metric tons/day of "reactive organic gas" and a formaldehyde conversion factor range of 0.06 to 0.12; and

3. Nationwide--technique assumes hydrocarbon emissions total 26,400,000 metric tons/yr and a formaldehyde conversion factor of 0.075. Based on the latter two figures, it seems reasonable to expect that nationwide formaldehyde production due to atmospheric photo-oxidation may be in the range of 500×10^8 to 2×10^9 kg per year.[69] The wide range is indicative of the uncertainty associated with this estimate.

SECTION 5
SOURCE TEST PROCEDURES

There is no EPA Reference Method for source sampling and analysis of formaldehyde; however, the EPA Industrial Environmental Research Laboratory has published a recommended Level 2 sampling and analysis procedure for aldehydes including formaldehyde.[70,71] This method involves the reaction of formaldehyde with 2,4-dinitrophenylhydrazine (DNPH) in hydrochloric acid (HCl) to form 2,4-dinitrophenylhydrazone. The hydrazone is then analyzed by high- performance liquid chromatography (HPLC).

Exhaust containing formaldehyde is passed through impingers or bubblers containing DNPH in 2N HCl (Figure 13).[70,71,72] The molar quantity of DNPH in the impingers must be in excess of the total molar quantity of aldehydes and ketones in the volume of gas sampled. Formaldehyde, higher molecular weight aldehydes, and ketones in the gas react with DNPH to yield hydrazone derivatives, which are extracted from the aqueous sample with chloroform. The chloroform extract is washed with 2N HCl followed by distilled water and is then evaporated to dryness. The residue is dissolved in acetonitrile. The solution is then analyzed by HPLC with an ultraviolet (UV) detector set at a wavelength of 254 microns. The mobile phase is 62 percent acetonitrile/38 percent water. The recommended column is a 4.6 mm by 25 cm stainless steel 5-micron Zorbax ODS (Dupont) reverse-phase column, and the flow rate is 1.5 ml/min. Under the above conditions, the residence time of formaldehyde is 4.46 minutes.[70] The detection limit of the method is 0.1 ng to 0.5 ng. Aldehydes have been recovered from air sample spikes with an average efficiency of 96 percent (+5.5 percent).[70]

Modifications of this general method have been applied to low-level ambient air measurements of formaldehyde. In estimating low levels by this procedure, precautions must be taken to ensure that degradation of the absorbing reagent does not occur. One measure found to be helpful consists of conditioning the glass samplers by rinsing them with dilute sulfuric acid followed by rinsing with the 2,4-DNPH absorbing solution.[73]

Because higher molecular weight aldehydes and ketones also react with DNPH, they may interfere with the analysis of formaldehyde at some chromatographic conditions. Thus, it may

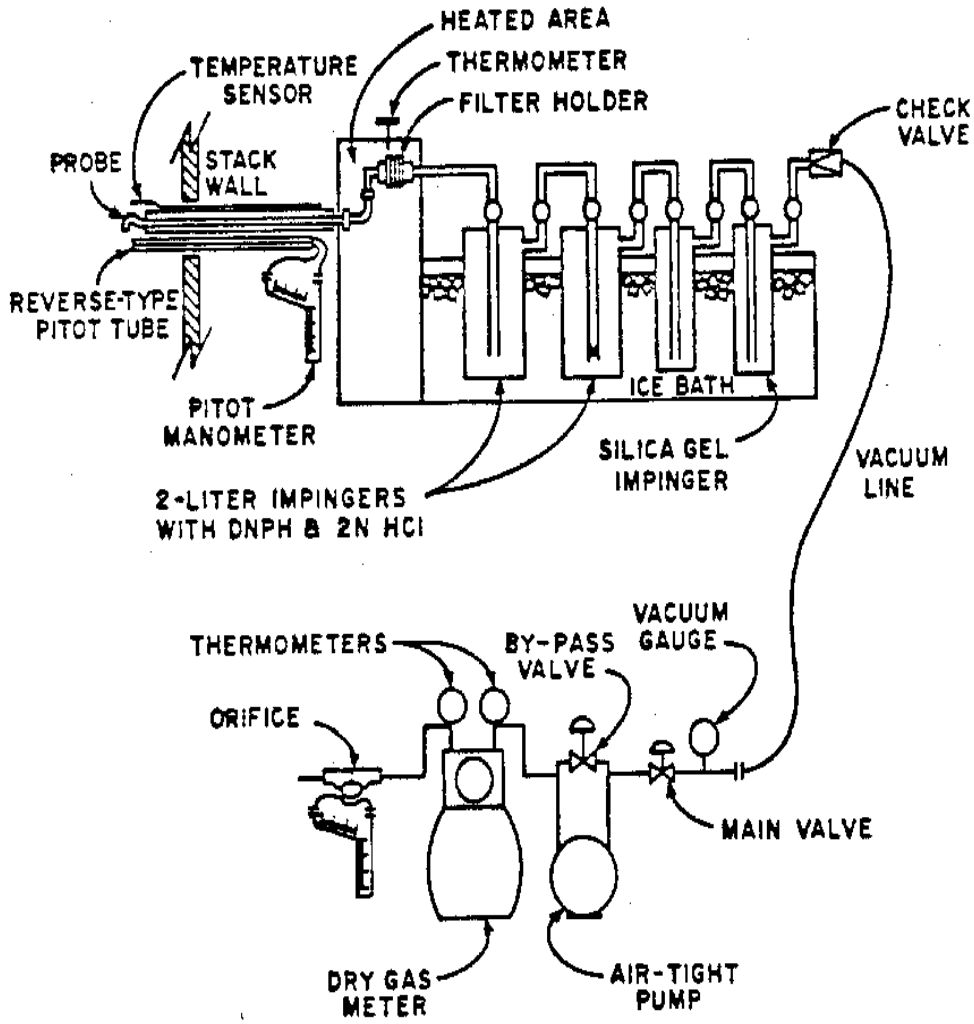

Figure 13. Method 5 sampling train modified for the measurement of formaldehyde. 70-72

be necessary to adjust the chromatographic conditions in order to give adequate separation of the Figure 13 formaldehyde-DNPH derivative (2,4-dinitrophenylhydrazone) from the hydrazone derivatives formed by higher molecular weight aldehydes and ketones.[73] It may also be necessary to adjust the acetonitrile/water ratio to avoid interference with residual DNPH.

When sulfur dioxide is present in the emission stream, it can dissolve in the absorbing solution to produce sulfite ion, which reacts rapidly with formaldehyde to form bisulfite. This side reaction should not be a problem as long as the absorbing solution is kept acidic (pH). However, the affect of high sulfur dioxide concentrations on the accuracy of the method has not been tested.[73]

It should also be noted that unpredictable deterioration has been observed for some samples analyzed by this method. Samples should therefore be analyzed within a few hours after collection.[73] Finally, the method does not apply when formaldehyde is contained in particulate matter.

REFERENCES

1. Encyclopedia of Chemical Technology, Kirk-Othmer, 3rd Edition, Volume II. New York, Wiley-Interscience Publication. 1980. p. 231-247.

2. JANAF Interim Thermochemical Tables. Midland, MI. The Dow Chemical Company. March 1961.

3. Kitchens, J.F., et al. Investigation of Selected Potential Environmental Contaminants: Formaldehyde. U.S. Environmental Protection Agency. Washington, DC. Publication No. EPA-560/2-76-009. August 1976.

4. Cupitt, L.T. Fate of Toxic and Hazardous Materials in the Air Environment. U.S. Environmental Protection Agency. Research Triangle Park, NC. Publication No. EPA-600/3-80-084. August 1980. p. 23.

5. Morris, R., and F. Higgins. Engineering and Cost Study of Air Pollution Control for the Petrochemical Industry, Volume 5: Formaldehyde Manufacture with the Mixed Oxide Catalyst Process. U.S. Environmental Protection Agency. Research Triangle Park, NC. Publication No. EPA-450/3-73-006e. March 1975.

6. Synthetic Organic Chemicals, United States Production and Sales, 1982. U.S. International Trade Commission. Washington, DC. 1983. p. 259.

7. Key Chemicals--Formaldehyde. Chemical and Engineering News. 60:26. March 29, 1982.

8. Human Exposure to Atmospheric Concentrations of Selected Chemicals, Volume 2. U.S. Environmental Protection Agency. Research Triangle Park, NC. February 1982. Appendix A-15.

9. Chemical Producers Data Base System--Formaldehyde. U.S. Environmental Protection Agency. Cincinnati, OH. July 1981.

10. Sheldrick, J., and T. Steadman. Product/Industry Profile and Related Analysis for Formaldehyde and Formaldehyde-Containing Consumer Products: Part 1--Overview of Formaldehyde Production and Markets. U.S. Consumer Product Safety Commission. Washington, DC. February 1979. p. B-24.

11. Lovell, R.J. Report 1: Formaldehyde. In: Organic Chemical Manufacturing Volume 9: Selected Processes. U.S. Environmental Protection Agency. Research Triangle Park, NC. Publication No. EPA-450/3-80-028d. December 1980. pp. III-1 to III-B.

12. Letter from Howlett, C.T., Formaldehyde Institute, to Lahre, T., September 29, 1983. EPA/OAQPS.

13. Memo and addendum from Mascone, D., EPA, to Farmer, J., EPA. June 11, 1980. Thermal Incinerator Performance for NSPS.

14. Letter from Gilby, P.G., E.I. DuPont De Nemours & Company, Inc., to Lahre, T., EPA:OAQPS. July 29, 1983.

15. Lovell, R.J. Report 1: Formaldehyde. In: Organic Chemical Manufacturing Volume 9: Selected Processes. U.S. Environmental Protection Agency. Research Triangle Park, NC. Publication No. EPA-450/3-80-028d. December 1980. pp. IV-1 to IV-12.

16. 1983 Directory of Chemical Producers, United States of America. SRI International. Menlo Park, CA. 1983.

17. Encyclopedia of Chemical Technology, Kirk-Othmer, 3rd Edition, Volume II. New York, Wiley-Interscience Publication. 1980. pp. 440-469.

18. Wilkins, G.E. Industrial Process Profiles for Environmental Use. Chapter 10--Plastics and Resins Industry. U.S. Environmental Protection Agency. Cincinnati, OH. Publication No. EPA-600/2-77-023j. February 1977.

19. Knob, A., and W. Scheib. Chemistry and Application of Phenolic Resins. New York, Springer-Uerlag, 1979. p. 61.

20. Encyclopedia of Chemical Technology, Kirk-Othmer, 3rd Edition, Volume II. New York, Wiley-Interscience Publication. 1980. pp. 112-123

21. Faith, W.L., D.B. Keyes, and R.L. Clark. Industrial Chemicals, 4th Edition. New York, John Wiley and Sons. 1975.

22. Liepins, R., and F. Mixon. Industrial Process Profile for Environmental Use. Chapter 6--The Industrial Organic Chemicals Industry. U.S. Environmental Protection Agency. Cincinnati, OH. Publication No. EPA-600/2-77-023f. February 1977.

23. Hedley, W.H., et al. Potential Pollutants from Petrochemical Processes. Monsanto Research Corporation. Dayton, OH. December 1973.

24. Walker, J.F. Formaldehyde. 3rd Edition. New York, Reinhold Publishing Corporation. 1964.

25. Encyclopedia of Chemical Technology, Kirk-Othmer, 3rd Edition, Volume II. New York, Wiley-Interscience Publication. 1980. pp. 256-259.

26. Shreve, R.N., and J.A. Brink. Chemical Process Industries, Fourth Edition. New York, McGraw-Hill, Inc. 1977. pp. 588-601.

27. Serth, R.W., and T.W. Hughes. Source Assessment: Phthalic Anhydride (Air Emissions). U.S. Environmental Protection Agency. Research Triangle Park, NC. Publication No. EPA-600/2-76.032d. December 1976.

28. Urea Manufacturing Industry--Technical Document. U.S. Environmental Protection Agency, Research Triangle Park, NC. Publication No. EPA-450/3-81-001. January 1981. p. 2-4.

29. Encyclopedia of Chemical Technology, Kirk-Othmer, 3rd Edition, Volume II. New York, Wiley-Interscience Publication. 1980. pp. 3-10 to 3-20.

30. Encyclopedia of Chemical Technology, Kirk-Othmer, 3rd Edition, Volume II. New York, Wiley-Interscience Publication. 1980. pp. 3-21 to 3-27.

31. Report of the Fertilizer Institute's Formaldehyde Task Group. The Fertilizer Institute, Washington, DC. February 4, 1983. 10 pages.

32. Encyclopedia of Chemical Technology, Kirk-Othmer, 3rd Edition, Volume II. New York, Wiley-Interscience Publication. 1980. pp. 3-5.

33. Encyclopedia of Chemical Technology, Kirk-Othmer, 3rd Edition, Volume II. New York, Wiley-Interscience Publication. 1980. pp. 4-28.

34. Sheldrick, J., and T. Steadman. Product/Industry Profile and Related Analysis for Formaldehyde and Formaldehyde-Containing Consumer Products. Part II--Products/Industry Profile on Urea Formaldehyde. U.S. Consumer Product Safety Commission, Washington, DC. February 1979.

35. Urea-Formaldehyde Foam Gets the Axe for Home Insulation. Chemical Week. 130(9):12-13. March 1982.

36. Hawthorne, A.R., and R.B. Gammage. Formaldehyde Release from Simulated Wall Panels Insulated with Urea-Formaldehyde Foam Insulation. Journal of the Air Pollution Control Association. 32(11):1126-1131. November 1982.

37. Pickrell, J.A., et al. Formaldehyde Release Rate Coefficient From Selected Consumer Products. Environmental Science and Technology. 17(12):753-757. 1983.

38. A Survey of Formaldehyde and Total Gaseous Nonmethane Organic Compound Emissions From Particleboard Press Vents. NCASI Technical Bulletin No. 493. June 1986.

39. Formaldehyde, Phenol, and Total Gaseous Nonmethane Organic Compound Emissions From Flakeboard and Oriented-Strand Board Press Vents. NCASI Technical Bulletin No. 503. September 1986.

40. Vaught, C.C. (Midwest Research Institute). Evaluation of Emission Control Devices at Waferboard Plants. U.S. Environmental Protection Agency Control Technology Center. EPA-450/3-80-002. October 1988.

41. A Survey of Emissions From Dryer Exhausts in the Wood Panelboard Industry. NCASI Technical Bulletin No. 504. September 1986.

42. Radian Corporation. Evaluation of Emission Factors for Formaldehyde From Certain Wood Processing Operations. U.S. Environmental Protection Agency Control Technology Center. EPA-450/3-87-023. October 1987.

43. Marshall, Walt. Consumer Products Safety Commission, Washington, DC. Personal communication with D.C. Misenheimer, GCA, November 23, 1983.

44. Statistical Policy Division, Office of Management and Budget. Standard Industrial Classification (SIC) Manual. 1972.

45. Formaldehyde Special Study. Wisconsin Department of Natural Resources, Bureau of Air Management. Publication No. AM-048-090. November 21, 1990.

46. Procedures for Emission Inventory Preparation, Volume I: Emission Inventory Fundamentals. U.S. Environmental Protection Agency Research Triangle Park, NC. EPA-450/4-81-026a. September 1981.

47. Procedures for Emission Inventory Preparation, Volume II: Point Sources. U.S. Environmental Protection Agency. Research Triangle Park, NC. EPA-450/4-81-026b. September 1981.

48. Procedures for Emission Inventory Preparation, Volume III: Area Sources. U.S. Environmental Protection Agency, Research Triangle Park, NC. EPA-450/4-81-026c. September 1981.

49. Procedures for Emission Inventory Preparation, Volume IV: Mobile Sources. U.S. Environmental Protection Agency. Research Triangle Park, NC. September 1981.

50. Procedures for Emission Inventory Preparation, Volume V: Bibliography. U.S. Environmental Protection Agency. Research Triangle Park, NC. EPA-450/4-81-026e. September 1981.

51. Hangebrauk, R.P., D.J. Von Lehmden, and J.E. Meeker. Emissions of Polynuclear Hydrocarbons and Other Pollutants from Heat Generation and Incineration Processes. Journal of the Air Pollution Control Association, 14(7):267-278. July 1964.

52. Hovey, H.H., A. Risman, and J.F. Cumman. The Development of Air Contaminant Emission Tables for Nonprocess Emissions. Paper No. 65-17 presented at the 58th Annual Meeting, Air Pollution Control Association, Toronto, Canada, June 20-24, 1965.

53. Smith, W.S. Atmospheric Emissions from Fuel Oil Combustion, An Inventory Guide. AP-2, U.S. Department of Health, Education, and Welfare Public Health Service. Cincinnati, OH. November 1962.

54. Natusch, D.F.S. Potentially Carcinogenic Species Emitted to the Atmosphere by Fossil-Fueled Power Plants. Environmental Health Perspectives 22:79-90. 1978.

55. Lipari, L., et al. Aldehyde Emissions From Wood-Burning Fireplaces. Environmental Science and Technology. 18(5). May 1984.

56. DeAngelis, D.G., et al. (Monsanto). Preliminary Characterization of Emissions From Wood-Fired Residential Combustion Equipment. U.S. Environmental Protection Agency, Research Triangle Park, NC. EPA-600/7-80-040. NTIS P880-182066. March 1980.

57. Snowden, W.D., et al. Source-Sampling Residential Fireplaces for Emission Factor Development. U.S. Environmental Protection Agency Research Triangle Park, NC. EPA-450/3-76-010. 1975.

58. Wetherold, R.G., and D.D. Rosebrook. Assessment of Atmospheric Emissions from Petroleum Refining. Volume 1. U.S. Environmental Protection Agency. Research Triangle Park, NC. Technical Report EPA-600/2-80-075a. April 1980.

59. Compilation of Air Pollution Emission Factors. Third Edition. AP-42 U.S. Environmental Protection Agency, Research Triangle Park, NC. August 1977.

60. Volatile Organic Compound (VOC) Species Data Manual, Second Edition. U.S. Environmental Protection Agency. Research Triangle Park, NC. EPA-450/4-80-015. July 1980.

61. Carey, P.M. Mobile Source Emissions of Formaldehyde and Other Aldehydes. EPA/AA/CTAB/PA/81-11. U.S. Environmental Protection Agency, Research Triangle Park, NC. Ann Arbor, MI. May 1981.

62. Memo from J.E. Sigsby, EPA/Environmental Sciences Research Laboratory, to J.H. Southerland, EPA/OAQPS. June 27, 1983. Discussion air emissions of formaldehyde from mobile sources.

63. Highway Statistics, 1982. U.S. Department of Transportation. Federal Highway Administration.

64. Mayer, M.A. Compilation of Air Pollutant Emission Factors for Combustion Processes, Gasoline Evaporation, and Selected Industrial Processes. Public Health Service, Cincinnati, OH. 1965.

65. Urban, C. Unregulated Exhaust Emissions From Non-Catalyst Baseline Cars Under Malfunction Conditions. U.S. Environmental Protection Agency. Ann Arbor, MI. EPA-460/3-81-020. May 1981.

66. Radian Corporation. Assessment of Atmospheric Emissions From Petroleum Refining: Volume 4 - Appendices C, D, and E. U.S. Environmental Protection Agency. Research Triangle Park, NC. EPA-600/3-81-020. July 1980.

67. PEDCo Environmental, Inc. Petroleum Refinery Enforcement Manual. U.S. Environmental Protection Agency. Washington, DC. EPA-340/1-80-008. March 1980.

68. Cantrell, A. Annual Refining Survey. Oil and Gas Journal. March 21, 1983. pp. 128.

69. Phillips, M.W., and G.E. Wilkins. Source Assessment of Formaldehyde Emissions. U.S. Environmental Protection Agency, Pollutant Analysis Branch. September 3, 1985.

70. Thrun, K.E., J.C. Harris, C.E. Rechsteiner, and D.J. Sorlin. Methods for Level 2 Analysis by Organic Compound Category. U.S. Environmental Protection Agency, Research Triangle Park, NC. EPA-600/7-81-028. March 1981.

71. Harris, J.C., M.J. Hayes, P.L. Levins, and D.B. Lindsay. EPA/IERL-RTP Procedures for Level 2 Sampling and Analysis of Organic Materials U.S. Environmental Protection Agency. Research Triangle Park, NC. EPA-600/7-78-033. February 1981.

72. Method 5--Determination of Particulate Emission From Stationary Sources. Federal Register. 42(160):41776. 1977.

73. Letter From Victor Elia, National Council of the Paper Industry for Air and Stream Improvement (NCASI), to Thomas Lahre, EPA. Providing comments on source test procedures. May 4, 1983.

APPENDIX A
CALCULATIONS OF PROCESS FUGITIVE EMISSIONS

Fugitive emissions of formaldehyde and other volatile organics result from leaks in process valves, pumps, compressors, and pressure relief valves. For formaldehyde production processes, the formaldehyde emission rates from these sources are based on process flow diagrams, process operation data, fugitive source inventories for typical plants,[1] and EPA emission factors for process fugitive sources.[2]

The first step in estimating fugitive emissions of formaldehyde is to list the process streams in the representative plant. Their phases are then identified from the process flow diagram and their compositions are estimated. For a reactor product stream, the composition is estimated based on reaction completion data for the reactor and on the plant product slate. For a stream from a distillation column or other separator, the composition is estimated based on the composition of the input stream to the unit, the unit description, and the general description of stream of interest (i.e., overheads, bottoms, or sidedraw).

After the process streams are characterized, the number of valves per stream are estimated by dividing the total number of valves at the plant equally among the process streams. Similarly, pumps are apportioned equally among liquid process streams, and relief valves are apportioned equally among all reactors, columns, and other separators. The locations of any compressors are determined from the process flow diagram.

Emissions are then calculated for pumps, compressors, valves in liquid and gas line service, and relief valves. Emissions from flanges and drains are minor in comparison with these sources and are therefore neglected. Fugitive emissions from a particular source are assumed to have the same composition as the process fluid to which the source is exposed. For valves in liquid service, for instance, formaldehyde emissions are determined by taking the product of (1) the total number of liquid valves in formaldehyde service, (2) the average formaldehyde content of the streams passing

through these valves, and (3) the average fugitive emission rate per valve per unit time as measured by EPA. Emissions from valves in gas service, pumps, and compressors are calculated in the same manner. For relief valves, fugitive emissions are assumed to have the composition of the overhead stream from the reactor or column served by the relief valve. Emissions from the various fugitive source types are summed to obtain total process fugitive emissions of formaldehyde.

Because emissions from process fugitive sources do not depend on their size, but only on their number, total process fugitive emissions are not dependent on plant capacity. Thus, the overall emissions are expressed in terms of kilograms per hour of operation.

FORMALDEHYDE METAL OXIDE CATALYST PROCESS

Representative Plant Fugitive Source Inventory--[1]

177 process valves (in hydrocarbon service)
4 pumps (not including spares)
4 safety relief valves

Process Line Composition--

Of the total process lines in hydrocarbon service, only four are in formaldehyde service, from the formaldehyde converter to formaldehyde storage (see Figure A-1).1 Compositions are estimated as follows:

		Composition (wt. percent)	
Stream number	Phase	$CH_2=0$	Water
4	Gas	29	71
5	Liquid	37	63
6	Liquid	37	63
7	Liquid	37	63

Valves--

$$\frac{177 \text{ valves}}{8 \text{ Streams}} \simeq 22 \text{ valves per process stream}$$

Assuming 22 valves in each of the above lines, and averaging the formaldehyde contents for gas and liquid lines, total plant valve emissions are estimated as follows:

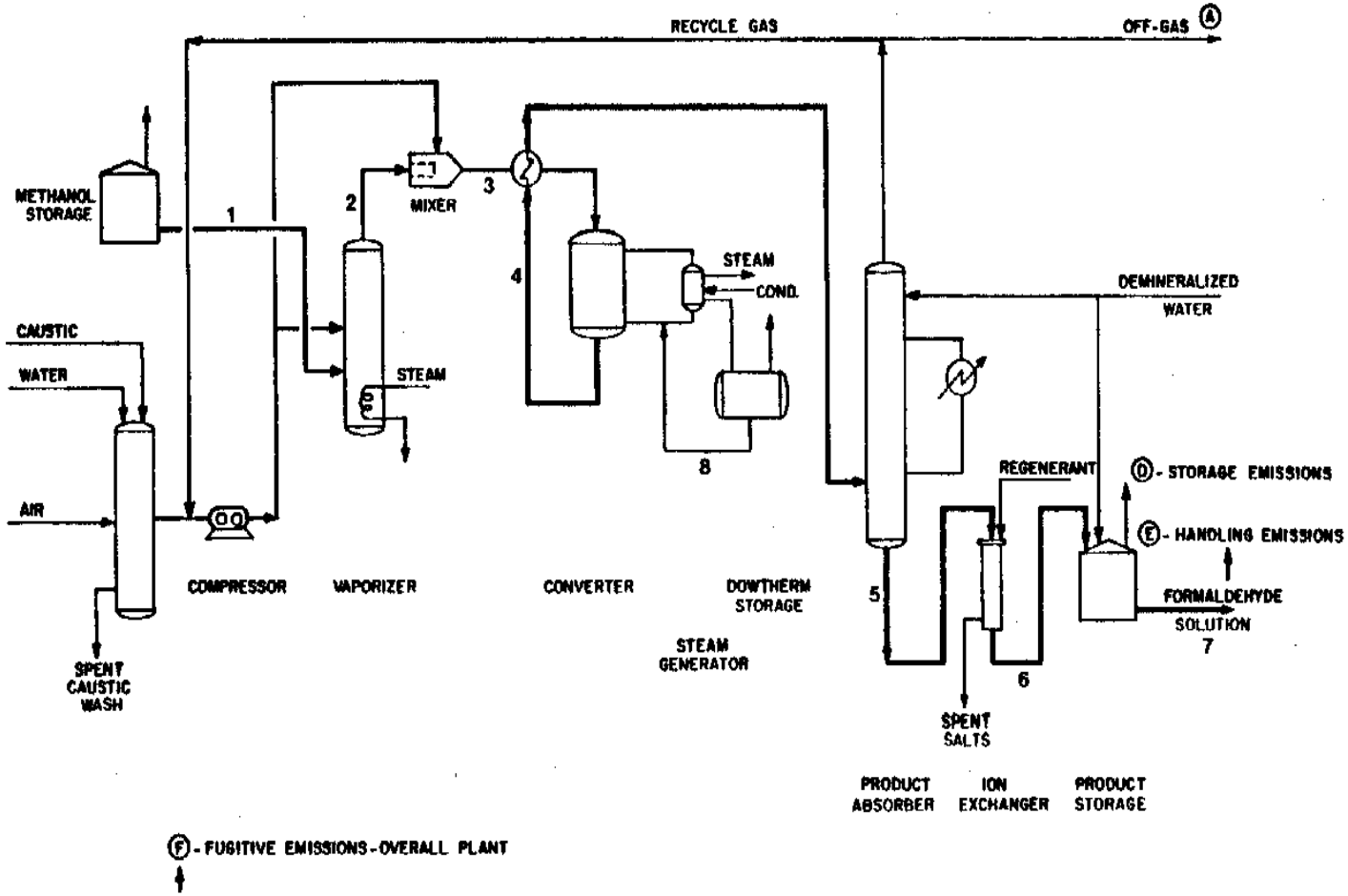

NOTE: The numbers in this figure refer to process streams, as discussed in the text, and the letters designate process vents. The heavy lines represent final product streams through the process.

Figure A-1. Process flow diagram for metal oxide process.[1]

	Component emissions factor (kg/hr-valve)[2]	Valves in CH_2=0 service	Average CH_2=0 content(percent)	Emissions (kg/hr)
Liquid valves	0.0071	66	37	0.173
Gas valves	0.0056	22	29	0.036
				0.209

Pumps--

$$\frac{\text{4 Pumps}}{\text{5 liquid lines}} \simeq \text{1 pump per liquid process line}$$

For one pump in each of the six liquid lines in formaldehyde service, an emission factor of 0.05 kg/hr/pump,[2] and average formaldehyde concentration of 37 percent, pump emissions from the model plant are estimated at:

1 pump/line x 3 lines x 0.05 kg/hr x 0.37 = 0.056 kg/hr

Compressor--

There are no compressors in formaldehyde service.

Relief Valves--

It is assumed that two of the four relief valves are applied to the converter and two to the vaporizer. The converter overheads contain about 100 percent formaldehyde, while the vaporizer is not in formaldehyde service. Using an emission factor of 0.104 kg/hr-valve,[2] emissions from the converter relief valves can be estimated as follows:

2 relief valves x 0.104 kg/hr-valve = 0.208 kg/hr

Total process fugitive emissions--

Total process fugitive emissions of formaldehyde from the metal oxidation process representative plant are as follows:

Valves-liquid	0.173
-gas	0.036
Pumps	0.056
Compressors	--
Relief valves	0.209
Total	0.47 kg/hr

Controls that can be used to reduce fugitive emissions include rupture disks on relief valves, pumps with double mechanical seals, and inspection and maintenance of pumps and valves. Double mechanical seals and rupture disks are approximately 100 percent efficient in reducing emissions from pumps and relief valves. Monthly inspection and maintenance (I/M) is about 73 percent

efficient for valves in gas service, 59 percent efficient for valves in liquid service, and 61 percent efficient for pumps; while quarterly I/M is about 64 percent efficient for gas valves, 44 percent efficient for liquid valves, and 33 percent efficient for pumps.[2]

Overall efficiencies were calculated for three control options. The first, quarterly I/M for pumps and valves, has an overall efficiency for formaldehyde emissions of about 53 percent. Monthly I/M for pumps and valves has an overall efficiency of about 73 percent. The use of double mechanical seal pumps, application of rupture disks to relief valves, and monthly I/M for other valves has an overall efficiency of about 79 percent.[2]

FORMALDEHYDE METALLIC SILVER PROCESS

Model Plant Fugitive Source Inventory [1]--

214 process valves
7 pumps (not including spares)
6 safety relief valves

Process Line Composition--

Of the total 23 process lines, about 13 are in formaldehyde service, from the converters reactor to formaldehyde storage (see Figure A-2).[1] Compositions are estimated as follows:

		Composition (wt. percent)			
Stream number	Phase	$CH_2=0$	H_2O	CH_2OH	Other
3a-f	Gas	20	-	-	80
4	Gas	20	-	-	80
5	Gas	20	-	-	80
6	Liquid	10	85	5	0
7	Liquid	30	55	15	-
9	Liquid	37	63	30	-
11	Liquid	37	63	-	-
12	Liquid	37	63	-	-

<u>Valves</u>

$$\frac{214 \text{ valves}}{23 \text{ lines}} \simeq 9 \text{ valves per process line}$$

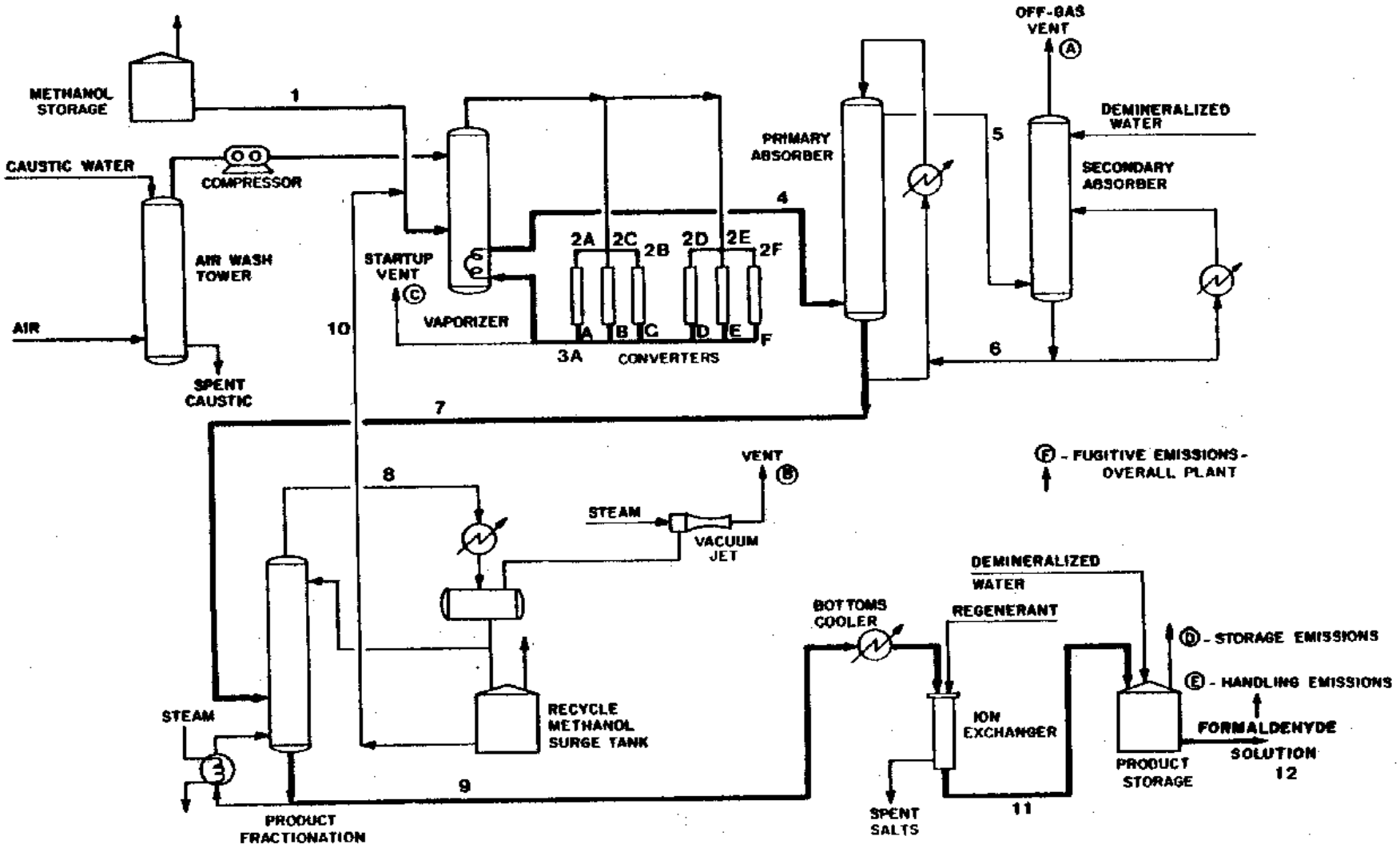

NOTE: The numbers in this figure refer to process streams, as discussed in the text, and the letters designate process vents. The heavy lines represent final product streams through the process.

Figure A-2. Process flow diagram for silver catalyst process.[1]

Assuming 9 valves in each of the above lines, and averaging the formaldehyde contents for gas and liquid lines, total plant valve emissions are estimated as follows:

	Component emission factor (kg/hr-valve)[2]	Valves in CH_2=0 service	Average CH_2=0 content (percent)	Emissions (kg/hr)
Liquid valves	0.007	45	30	0.096
Gas valves	0.0056	72	20	0.081
				0.177

Pumps--

$$\frac{\text{7 Pumps}}{\text{6 liquid lines}} \simeq \text{1 pump per liquid process line}$$

Assuming an average of one pump for each of the 15 liquid process lines in formaldehyde service, an emission factor of 0.05 kg/hr-pump[2] and average formaldehyde content of 30 percent, pump emissions from the model plant are estimated as follows:

1 pump/line x 7 lines x 0.05 kg/hr x 0.30 = 0.105 kg/hr

There are no compressors in formaldehyde service.

Relief Valves--

It is assumed that two relief valves are applied to the vaporizer and four to the bank of converters. The converter overheads contain about 20 percent formaldehyde, while the vaporizer is not in formaldehyde service. Using an emission factor of 0.104 kg/hr, emissions from the converter relief valves are estimated as follows:

4 relief valves x 0.104 kg/hr-valve = 0.416 kg/hr

Total Process Fugitive Emission Rate--

Total process fugitive emissions of formaldehyde for the silver catalyst process:

Valves - liquid	0.096
- gas	0.081
Pumps	0.105
Relief valves	0.416
Total	0.70 kg/hr

Controls that can be used to reduce fugitive emissions include rupture disks on relief valves, pumps with double mechanical seals, and inspection and maintenance of pumps and valves. The efficiencies of these controls for individual components are given in the previous section on metal oxide catalyst process fugitive emissions.

The first control option, quarterly I/M for pumps and valves, has an overall efficiency for formaldehyde emissions of about 57 percent. Monthly I/M for pumps and valves has an overall efficiency of about 69 percent, and the use of double mechanical pumps, application of rupture disk to relief valves, and monthly I/M for other valves has an overall efficiency of about 91 percent.[2]

REFERENCES APPENDIX A

S Organic Chemical Manufacturing, Volume B. EPA-450/3-80-028d. U.S. Environmental Protection Agency, Research Triangle Park, NC. 1980.

S Fugitive Emission Sources of Organic Compounds - Additional Information on Emissions, Emission Reductions, and Costs. EPA-450/3-82-010. U.S. Environmental Protection Agency, Research Triangle Park, NC. 1982.