United States
Environmental Protection
Agency

Office of Air Quality
Planning and Standards
Research Triangle Park, NC 27711

EPA-454/R-93-006
February 1993

Air

EPA

LOCATING AND ESTIMATING AIR EMISSIONS FROM SOURCES OF METHYLENE CHLORIDE

LOCATING AND ESTIMATING AIR EMISSIONS FROM SOURCES OF METHYLENE CHLORIDE

Final Report

Prepared for:

Dallas Safriet
Emission Inventory Branch
U. S. Environmental Protection Agency
Research Triangle Park, North Carolina 27711

Prepared by:

Radian Corporation
Post Office Box 13000
Research Triangle Park, North Carolina 27709

April 22, 1993

This report has been reviewed by the Office Of Air Quality Planning And Standards, U.S. Environmental Protection Agency, and has been approved for publication. Any mention of trade names or commercial products is not intended to constitute endorsement or recommendation for use.

EPA-454/R-93-006

TABLE OF CONTENTS

Section		Page
1	Purpose of Document	1
	References for Section 1	4
2	Overview of Document Contents	5
3	Background	7
	Nature of Pollutant	7
	Overview of Production and Use	9
	References for Section 3	13
4	Emissions from Methylene Chloride Production	15
	Process Descriptions	15
	Emission Sources and Controls	20
	Emission Estimates	25
	References for Section 4	36
5	Emissions from Uses of Methylene Chloride	37
	Paint Stripper Industry	37
	References for Paint Stripper Industry	53
	Plastics Manufacturing	55
	Polycarbonate Resins	55
	Triacetate Fiber	64
	Plastics Production	68
	References for Plastics Manufacturing	72
	Flexible Urethane Foam Production Industry	73
	References for Polyurethane Foam Industry	81
	Pharmaceutical Manufacturing	83
	References for Pharmaceutical Manufacturing	97
	Solvent Cleaning and Photoresist Stripping	99
	References for Solvent Cleaning and Photoresist Stripping	120
	Aerosol Packaging and Dispensing	121

TABLE OF CONTENTS (Continued)

Section		Page
	References for Aerosol Packaging and Dispensing	132
	Miscellaneous	135
	Pesticide Manufacturing	135
	Photographic Film Manufacture	138
	Paints and Coatings	141
	References for Miscellaneous Section	143
6	Source Test Procedures	145
	EPA Method 0030	145
	EPA Methods 5040 And 5041	147
	EPA Method 18	149
	Compendium Methods TO-1, TO-2, and TO-14	151
	NIOSH Method 1005	153
	References for Section 6	154

APPENDICES

Appendix		Page
A	Example Procedures to Estimate Methylene Chloride Emissions	A-1
	References for Appendix A	A-8
B	National List of Paint Stripper Formulators (July 1987)	B-1
C	National List of Aerosol Packagers	C-1
D	TRIS List of Pharmaceutical Facilities Using Methylene Chloride	D-1
E	Calculation of Uncontrolled Open-Top Vapor Cleaner Emission Factor Incorporating Recycle	E-1

LIST OF TABLES

Table		Page
1	Chemical and Physical Properties of Methylene Chloride	8
2	Estimated United States Methylene Chloride Consumption By End Use for 1991 [in Mg (Million Pounds)]	11
3	Potential Source Categories of Methylene Chloride Emissions	12
4	United States Methylene Chloride Production	16
5	Control Techniques And Efficiencies Applicable to Equipment Leak Emissions	22
6	Waste and Wastewater Emission Control Techniques and Efficiencies	26
7	1983 Reported Controls and Control Efficiencies from Facilities Producing Methylene Chloride	27
8	Average Emission Factors for Equipment Leak Emissions	32
9	Emission Factors for Methylene Chloride Production	34
10	Methylene Chloride Consumption in 1987 by Paint Stripper Sector	39
11	Control Techniques for Emissions of Chlorinated Solvents from Paint Stripper Formulators	44
12	Estimated Methylene Chloride Emissions from Paint Stripper Formulators (1988)	46
13	Estimated Methylene Chloride Emissions From Automobile Manufacturing Facilities, 1987	48
14	Estimated Methylene Chloride Emissions From Large-Scale Military Users of Paint Stripper, 1987	50
15	Paint Stripping Emissions Factors	51
16	Additional Control Techniques for Emissions of Methylene Chloride Solvents from Paint Stripper Users	52
17	Estimated 1983 Emissions and Controls at Facilities Using Methylene Chloride in Polycarbonate Resin Production	59
18	Estimated Methylene Chloride Emissions and Controls Associated with Triacetate Fiber Manufacture	67
19	Estimated Methylene Chloride Emissions and Controls Associated with Plastics Production at General Electric, Pittsfield, Massachusetts in 1983	69
20	Uncontrolled Emission Factors for Polyurethane Foam Production	78

LIST OF TABLES (Continued)

Table		Page
21	Control Techniques and Efficiencies Used to Estimate Controlled Emissions from Polyurethane Flexible Foam Production	79
22	Partial List of Pharmaceutical Manufacturing Facilities that Use Methylene Chloride	84
23	Methylene Chloride Purchases and Ultimate Disposition by Pharmaceutical Manufacturers	91
24	Methylene Chloride Emission Factors for Pharmaceutical Manufacturing	92
25	Available Control Techniques for OTVC Operations	113
26	Available Control Techniques for In-Line Operations	114
27	Available Control Techniques for Cold Cleaners	115
28	Methylene Chloride Usage and Emission Factors for Uncontrolled and Controlled Cleaners	117
29	National Emissions of MC From Organic Solvent Cleaners, (1987)	118
30	Weight Percent of Methylene Chloride in Aerosol Product Tanks, Reported by Section 114 Questionnaire Respondents (1987)	123
31	Control Techniques for Emissions of Chlorinated Solvents from Aerosol Packagers (1988)	129
32	Estimated Methylene Chloride Emissions from Aerosol Packagers in 1987	131
33	Emissions from Three Points at a Pesticide Facility, 1988	137

LIST OF FIGURES

Figure		Page
1	Locations of Plants Manufacturing Methylene Chloride	17
2	Process Flow Diagram for the Production of Methylene Chloride and Co-products by the Direct Chlorination of Methane.	19
3	Process Flow Diagram for the Production of Methylene Chloride and Co-Products by the Hydrochlorination of Methanol	21
4	Process Flow Diagram for the Production of Polycarbonate Resin	56
5	Process Flow Diagram for the Production of Triacetate Fibers	66
6	Schematic Flow Diagram of Polyurethane Flexible Foam Production.	76
7	Typical Synthetic Organic Pharmaceutical Chemical Process	86
8	Pan Tablet Coating Process Solvent Recovery System	94
9	Wurster Process Solvent Recovery System	96
10	Open Top Vapor Cleaner	101
11	Cross-Rod Cleaner	103
12	Monorail In-Line Cleaner	105
13	Schematic Diagram of an In-Line Photoresist Stripping Machine	106
14	Carburetor Cleaner	108
15	Batch Cleaner Idling Emission Sources	109
16	In-Line Cleaner Emission Sources	110
17	Typical Aerosol Spray System	125
18	Photographic Film Process with MC Emissions	139
19	Schematic Diagram of Volatile Organic Sampling Train (VOST)	146
20	Schematic Diagram of Trap Desorption/Analysis System	148
21	Integrated Bag Sampling Train	150

SECTION 1
PURPOSE OF DOCUMENT

The Environmental Protection Agency (EPA) and State and local air pollution control agencies are becoming increasingly aware of the presence of substances in the ambient air that may be toxic at certain concentrations. This awareness has led to attempts to identify source/receptor relationships and to develop control programs to regulate toxic emissions. Unfortunately, very little information is available on the ambient air concentrations of these substances or on the sources that may be discharging them to the atmosphere.

To assist groups interested in inventorying air emissions of various potentially toxic substances, EPA is preparing a series of documents, such as this one, that compiles available information on sources and emissions. Existing documents in the series are listed below.

Substance	EPA Publication Number
Acrylonitrile	EPA-450/4-84-007a
Carbon Tetrachloride	EPA-450/4-84-007b
Chloroform	EPA-450/4-84-007c
Ethylene Dichloride	EPA-450/4-84-007d
Formaldehyde (Revised)	EPA-450/2-91-012
Nickel	EPA-450/4-84-007f
Chromium	EPA-450/4-84-007g
Manganese	EPA-450/4-84-007h
Phosgene	EPA-450/4-84-007i
Epichlorohydrin	EPA-450/4-84-007j
Vinylidene Chloride	EPA-450/4-84-007k
Ethylene Oxide	EPA-450/4-84-007l
Chlorobenzenes	EPA-450/4-84-007m
Polychlorinated Biphenyls (PCBs)	EPA-450/4-84-007n
Polycyclic Organic Matter (POM)	EPA-450/4-84-007p
Benzene	EPA-450/4-84-007q
Organic Liquid Storage Tanks	EPA-450/4-88-004
Coal and Oil Combustion Sources	EPA-450/2-89-001
Municipal Waste Combustors	EPA-450/2-89-006
Perchloroethylene and	EPA-450/2-90-013
1,3-Butadiene	EPA-450/2-89-021
Chromium (supplement)	EPA-450/2-89-002
Sewage Sludge	EPA-450/2-90-009
Styrene	EPA-450/4-91-029

This document deals specifically with methylene chloride (MC), also known as dichloromethane. The intended audience includes Federal, State and local air pollution personnel and others who are interested in locating potential emitters of MC and in making gross estimates of MC air emissions.

Data on some potential sources of MC emissions are limited and the configurations of many sources will differ from those described here. Therefore, this document is best used as a primer to inform air pollution personnel about (1) the types of sources that may emit MC, (2) process variations and release points that may be expected within these sources, and (3) available emissions information indicating the potential for MC to be released into the air from each operation.

The reader is strongly cautioned against using the emissions information contained in this document to develop an exact assessment of emissions from any particular facility. Because insufficient data are available to develop statistical estimates of the accuracy of these emission factors, no estimate can be made of the error that could result when these factors are used to calculate emissions from any given facility. It is possible, in some extreme cases, that order-of-magnitude differences could result between actual and calculated emissions, depending on differences in source configurations, control equipment, and operating practices. Thus, in situations where an accurate assessment of MC emissions is necessary, source-specific information should be obtained to confirm the existence of particular emitting operations, the types and effectiveness of control measures, and the impact of operating practices.

In addition to the information presented in this document, another potential source of MC emissions data is the Toxic Chemical Release Inventory (TRI) form required by Section 313 of Title III of the Superfund Amendments and Reauthorization Act of 1986 (SARA 313.)[1] SARA 313 requires owners and operators of certain facilities that manufacture, import, process, or otherwise use certain toxic chemicals to annually report releases to any environmental media. As part of SARA 313, EPA provides public access to the annual emissions data. The TRI data include general facility information, chemical information, and emissions data. Air emissions data are reported as

total facility release estimates, broken out into fugitive and point components. No individual process or stack data are provided to EPA. The TRI requires the use of available stack monitoring or measurement of emissions to comply with SARA 313. If monitoring data are unavailable, emissions are to be quantified based on best estimates of releases to the environment.

The reader is cautioned that the TRI will not likely provide facility, emissions, and chemical release data sufficient for conducting detailed exposure modeling and risk assessment. In many cases, the TRI data are based on annual estimates of emissions (i.e., on emission factors, material balances, engineering judgement). In addition, for 1989 and subsequent years, only those facilities manufacturing or processing in excess of 25,000 lbs/yr (11,340 kg/yr) of MC, or otherwise using in excess of 10,000 lbs/yr (4,540 kg/yr) of MC, were required to report MC emissions.[2] Thus, facilities that emit MC but fall below these thresholds may not be included in the TRI database.

The reader is urged to obtain TRI data in addition to the information provided in this document to locate potential emitters of MC and to make preliminary estimates of air emissions from these facilities. To obtain an exact assessment of air emissions from processes at a specific facility, source tests or detailed material balance calculations should be conducted, and detailed plant site information should be compiled.

REFERENCES FOR SECTION 1

1. Toxic Chemical Release Reporting: Community Right-To-Know, 52 FR 21152-21208, June 4, 1987.

2. Toxic Chemical Release Inventory Reporting Package for 1990, EPA 560/4-91-001, U.S. Environmental Protection Agency, January 1991, p. 9.

SECTION 2
OVERVIEW OF DOCUMENT CONTENTS

This section outlines the nature, extent, and format of the material presented in the remaining sections of this report.

Section 3 briefly summarizes the physical and chemical characteristics of MC, and provides an overview of its production and use. This background section may be useful in developing a general perspective on the nature of MC and how it is manufactured and consumed.

Sections 4 and 5 focus on major source categories that may discharge MC air emissions. Section 4 discusses emissions from the production of MC; Section 5 discusses emissions from the major uses of MC.

Example process descriptions and flow diagrams, potential emission points, and available emission factor estimates that show the potential for MC emissions before and after controls are presented for each major industrial source category described in Section 4 and 5. Also included are the names of individual companies that either produce or use MC, based primarily on information from trade publications.

Section 6 summarizes available procedures for source sampling and analysis of MC. Details are not prescribed nor is any EPA endorsement given or implied to any of these procedures. At this time, EPA has not generally evaluated these methods. Consequently, this document merely provides an overview of applicable source sampling procedures, citing references for those interested in conducting source tests.

This document does not contain any discussion of health or other environmental effects of MC, nor does it include any discussion of ambient air levels or ambient air monitoring techniques.

Comments on the contents or usefulness of this document are welcome, as is any information on process descriptions, operating

practices, control measures, and emissions that would enable EPA to improve its contents. All comments should be sent to:

Chief, Emission Factor and Methodologies Section
Emission Inventory Branch (MD-14)
U. S. Environmental Protection Agency
Research Triangle Park, North Carolina 27711

SECTION 3
BACKGROUND

NATURE OF POLLUTANT

Methylene chloride (Chemical Abstracts Registry Number 75-09-2), a saturated aliphatic halogenated hydrocarbon, is a clear, colorless, volatile liquid with an odor similar to ether. Methylene chloride is a chemical used in many applications because of its high solvency, low corrosiveness to many metals, and lack of flash or fire point.[1] It was introduced as a replacement for more flammable solvents over 60 years ago because of its extensive oil and fat solubility, and low flammability potential.

Methylene chloride's molecular structure is represented as:

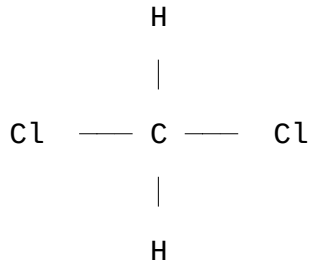

Table 1 shows the chemical and physical properties of MC.[2-4]

Methylene chloride is released to the atmosphere during its production and use. The EPA has indicated that MC may be exempted from regulation as a volatile organic compound (VOC) under state regulations implementing the national ambient air quality standard for ozone because it is not considered to appreciably contribute to ozone formation; however, MC is on the list of 189 hazardous air pollutants (HAP's) to be regulated under Section 112 of the Clean Air Act (Title III). Methylene chloride waste solvent is considered a hazardous waste under the Resource Conservation and Recovery Act (RCRA) because it poses a human health threat as a probable human carcinogen and neurotoxin. The reportable quantity for releases (any spilling, leaking, pumping, pouring, emitting, emptying, discharging, injecting, escaping, leaching, dumping, or disposing into the environment, excluding those releases that result in exposure to persons solely in the workplace and emissions from the engine exhaust of a motor vehicle, rolling stock, aircraft, vessel or pipeline pumping station) under the Comprehensive Environmental Response,

TABLE 1. CHEMICAL AND PHYSICAL PROPERTIES OF METHYLENE CHLORIDE

Synonyms	Dichloromethane (DCM), methylene dichloride, methylene bichloride, methane dichloride
Chemical Abstracts Registry Number	75-09-2
Molecular formula	CH_2Cl_2
Molecular weight	84.9
Ambient state	Clear, colorless, volatile liquid
Odor threshold	Between 100 and 300 ppm ethereal odor
Boiling point at 101.3 kPa (760mmHg)	39.8°C
Freezing point	-96.7°C
Density, at 20°C kg/m^3	1315.7
Specific gravity, at 20°C	1.320
Vapor density (air = 1.02)	2.93
Vapor Pressure:	
kPa at 0°C	19.6
kPa at 20°C	46.5
kPa at 30°C	68.1
Diffusivity in air, m^2/s	9×10^{-5}
Refractive index at 20°C	1.4244
Coefficient of cubical expansion (20-35°C)	.0014
Viscosity at 20°C mPa x s (=cP)	.43
Surface tension:	
N/m (=dyn/cm) at 20°C	.02812
Heat of combustion, MJ/kg	7.1175
Heat of vaporization:	
at 20°C, KJ/kg (Btu/lb)	329.23 (141.7)
at 20°C, Kcal/kg	78.69
Heat capacity:	
at 25° C, J/mol	54.09
at 25°C, cal, mol	12.93
Solubility	Soluble with other grades of chlorinated solvents, diethyl ether, ethanol, ethyl alcohol, phenols, aldehydes, ketones, glacial acetic acid, triethyl phosphate, acetoacetic ester, and water (13.2 g/kg at 20°C).
Flash point (ASTM) D1310-67	None, however, as little as 10 vol% acetone or methyl alcohol can produce one.
Flammable (explosive) limits	
at 25°C, vol% in air	14-25
Auto-ignition temperature	640°C
Electrical properties at 24°	
Dielectric strength, V/cm (V/100 mils)	94.488 (24.00)
Specific resistivity at 24°, Ω · cm	1.81×10^8
Dielectric constant at 24°C, 100kHz	10.7

Source: References 2, 3, and 4.

Compensation, and Liability Act (CERCLA, or Superfund), is 1,000 pounds (454 kg).

In 1989, the Food and Drug Administration banned the use of MC in cosmetic products. Since 1990, the Consumer Product Safety Commission has required manufacturers, importers, packagers, and private labelers of consumer products containing 1 percent or more MC to report such information on product labels and in product marketing.

In November 1991, the Occupational Safety and Health Administration published a proposal to amend its existing regulation for employee exposure to MC.[5] The proposed standard, which would impact a number of industries, lowers the permissible exposure limit from 500 ppm MC to 25 ppm.

OVERVIEW OF PRODUCTION AND USE

Methylene chloride is produced in the United States by three companies at five plants with an estimated combined production capacity of 250 Mg (551 million pounds).[6] Total 1991 production of MC was 182 Mg (400 million pounds), of which an estimated 33 percent (60 Mg or 132 million pounds) was exported.[6] In 1991, use of MC in the United States was approximately 126 Mg (277 million pounds) of which 2 percent (3 Mg, or 7 million pounds) was imported.[6]

Methylene chloride demand in the United States has declined steadily in recent years with an estimated 15 percent decline in 1991.[6] This decline can be attributed to solvent recycling, environmental and occupational health concerns, and a slow economy.

Methylene chloride end uses include:

- as an active ingredient in solvent-based nonflammable paint removers/strippers;
- in the manufacture of polycarbonate resins;
- in the production of cellulose triacetate;
- as an auxiliary foam blowing and mold-releasing agent;
- as a carrier for pharmaceutical tablet coatings;

- as a solvent in vapor and nonvapor metal cleaning processes;
- as a solvent in aerosols;
- for photoresist stripping in electronic circuit board manufacture;
- as an inert ingredient in pesticides; and
- as an extractant in the recovery of oleoresins, oils, fats, and waxes.[6,7]

Table 2 shows the estimated U.S. consumption by end use for 1991.[6] Methylene chloride end use processes are discussed in detail in Section 5.

Table 3 lists potential source categories of MC emissions by their two-digit Standard Industrial Classification (SIC) code.[8] These source categories presented by SIC code represent MC use by a particular industry. The processes using MC within these industries are not reported in the TRI data used to generate Table 3. For example, within the Chemicals and Allied Products SIC code (which includes production of MC and other chemicals, plastics, pharmaceuticals, pesticides, and other products), MC may be used as an ingredient in the product or as a solvent, paint remover, or metal cleaner elsewhere in the plant.

TABLE 2. ESTIMATED UNITED STATES METHYLENE CHLORIDE CONSUMPTION BY END USE FOR 1991
[in Mg (Million Pounds)]

Paint Removal/Stripper	39,100 (86)
Plastics (polycarbonate resins, triacetate fiber)	20,000 (44)
Flexible Polyurethane Foam	17,700 (39)
Pharmaceuticals	13,600 (30)
Metal Cleaning/Degreasing	13,600 (30)
Aerosols	10,000 (32)
Electronics	5,000 (11)
Miscellaneous (pesticides, food processing, and synthetic fibers)	6,400 (14)
Total	125,400 (276)

Source: Reference 6.

TABLE 3. POTENTIAL SOURCE CATEGORIES OF METHYLENE CHLORIDE EMISSIONS

SIC[a] Code	Source Description	Number of Plants Reporting the Use of MC
28	Chemicals and Allied Products	653
30	Rubber and Miscellaneous Plastics Products	278
37	Transportation Equipment	164
34	Fabricated Metal Products	139
36	Electric & Other Electronic Equipment	137
35	Industrial Machinery and Equipment	85
33	Primary Metal Industries	68
32	Stone, Clay, and Glass Products	53
38	Instruments and Related Products	49
39	Miscellaneous Manufacturing Industries	42
25	Furniture and Fixtures	28
22	Textile Mill Products	25
26	Paper and Allied Products	19
27	Printing and Publishing	16
51	Wholesale Trade Nondurable Goods	15
31	Leather and Leather Products	12
29	Petroleum and Coal Products	11
20	Food and Kindred Products	11
23	Apparel and Other Textile Products	9
24	Lumber and Wood Products	9
73	Business Services	3
00	Blank	3
50	Wholesale Trade Durable Goods	2
49	Electric, Gas, and Sanitary Services	2
97	National Security and Intl. Affairs	2
87	Engineering & Management Services	2
46	Pipelines, except Natural Gas	1
08	Forestry	1
75	Auto Repair, Services, and Parking	1
02	Agricultural Production Livestock	1
96	Administration of Economic Programs	1
47	Transportation Services	1
42	Trucking and Warehousing	1
45	Transportation by Air	1
	TOTAL	1,845

Source: Reference 8.

[a] SIC = Standard Industrial Classification

REFERENCES FOR SECTION 3

1. Chemical Products Synopsis, "Methylene Chloride," Mannsville Chemical Products Corporation, Asbury Park, NJ, December, 1990.

2. "IARC Monographs on the Evaluation of the Carcinogenic Risk of Chemicals to Humans," International Agency for Research on Cancer, World Health Organization, Lyon, France, October 1979, pp. 449-450.

3. T. Anthony, "Methylene Chloride, Chlorocarbons and Chlorohydrocarbons (CH_2Cl_2)," Encyclopedia of Chemical Technology, Third Edition, John Wiley & Sons, Inc, New York, 1983, p. 687.

4. T. Anthony, "Methylene Chloride, Chlorocarbons and Chlorohydrocarbons," Concise Encyclopedia of Chemical Technology, John Wiley & Sons, Inc, New York, 1985, p. 262.

5. Occupational Safety and Health Administration Proposal for New Methylene Chloride Standard, 56 FR 57036, November 7, 1991.

6. "Chemical Profile--Methylene Chloride," Chemical Marketing Reporter, 241(9):42, March 2, 1992.

7. White Paper -- Methylene Chloride, Halogenated Solvents Industry Alliance, Washington, DC, February 1989.

8. Memorandum and attached computer file from E. Cotter, SYCOM, Washington, DC, to C. Thornton, U.S. Environmental Protection Agency, Research Triangle Park, NC, April 22, 1992.

SECTION 4
EMISSIONS FROM METHYLENE CHLORIDE PRODUCTION

As noted in Section 3, MC is produced in the United States by three companies at five plants. These plants, and associated locations, are presented in Table 4.[1] Figure 1 illustrates plant locations. Dow and Occidental Chemical both report methanol for use as a raw material in their production of MC, and Vulcan Materials Company reports 33 percent methane and 67 percent methanol for use as a raw material in their production of MC.[2]

Methylene chloride is generally stored in outdoor tanks and is distributed in bulk quantities by tank truck, railcar, barge, or 55-gallon drums. Production equipment includes storage tanks, reactor vessels, distillation columns, scrubbers, drying towers, pumps, valves, conduits, and piping.

PROCESS DESCRIPTIONS

In the United States, MC is produced by two processes: (1) direct chlorination of methane to produce methyl chloride, and (2) hydrochlorination of methanol to produce methyl chloride. Methyl chloride produced by both of these processes is chlorinated further by chlorine to produce methylene chloride. The predominant production process in the United States is the hydrochlorination of methanol.[3]

Methylene chloride production, regardless of the process method employed, is a continuous production process that takes place in an enclosed system.[4] Both MC production processes are described in the following paragraphs.

Direct Chlorination of Methane

The direct chlorination of methane yields MC by the direct reaction of excess methane (natural gas) with chlorine at a high temperature (340-370°C) and at a pressure slightly above one atmosphere, producing methyl chloride, MC, chloroform, and carbon tetrachloride as coproducts.[3,4]

TABLE 4. UNITED STATES METHYLENE CHLORIDE PRODUCTION

Producer	Location	Production Process
Dow Chemical U.S.A.	Freeport, Texas	Hydrochlorination of Methanol
Dow Chemical U.S.A.	Plaquemine, Louisiana	Hydrochlorination of Methanol
Occidental Petroleum Corporation	Belle, West Virginia	Hydrochlorination of Methanol
Vulcan Materials Company	Geismar, Louisiana	Hydrochlorination of Methanol
Vulcan Material Company	Wichita, Kansas	Hydrochlorination of Methanol and Chlorination of Methane

Note: LCP Chemicals closed a 27 Mg (60 million-pound) production capacity plant in Moundsville, West Virginia, in August 1991.[1]

Source: References 1, 2 and 3.

LEGEND OF PLANT NAMES AND LOCATIONS
1. Dow Chemical U.S.A., Freeport, TX
2. Dow Chemical U.S.A., Plaquemine, LA
3. Occidental Petroleum Corporation, Belle, WV
4. Vulcan Materials Company, Geismar, LA
5. Vulcan Materials Company, Wichita, KA

Sources: References 1 and 2

Figure 1. Locations of plants manufacturing Methylene Chloride.

6327209R

The process entails mixing methane with chlorine and then feeding the mixture to a chlorination reactor where MC, methyl chloride, chloroform, and carbon tetrachloride are formed. The co-products are separated by distillation and methyl chloride is recycled back to the chlorination reactor, where it can be controlled to yield mostly MC. This chlorination process is illustrated by the following reactions.[3,5]

$$\underset{\text{(methane)}}{CH_4} + \underset{\text{(chlorine)}}{Cl_2} \text{ -------> } \underset{\text{(methyl chloride)}}{CH_3Cl} + \underset{\text{(hydrogen chloride)}}{HCl}$$

$$\underset{\text{(methyl chloride)}}{CH_3Cl} + \underset{\text{(chlorine)}}{Cl_2} \text{ -----> } \underset{\text{(methylene chloride)}}{CH_2Cl_2} + \underset{\text{(hydrogen chloride)}}{HCl}$$

$$\underset{\text{(methylene chloride)}}{CH_2Cl_2} + \underset{\text{(chlorine)}}{Cl_2} \text{ ------> } \underset{\text{(chloroform)}}{CHCl_3} + \underset{\text{(hydrogen chloride)}}{HCl}$$

$$\underset{\text{(chloroform)}}{CHCl_3} + \underset{\text{(chlorine)}}{Cl_2} \text{ ------> } \underset{\text{(carbon tetrachloride)}}{CCl_4} + \underset{\text{(hydrogen chloride)}}{HCl}$$

A process flow diagram illustrating the direct chlorination of methane to produce MC is presented in Figure 2.[3]

Hydrochlorination of Methanol

Hydrochlorination of methanol involves the vapor-phase reaction of hydrogen chloride and methanol with the addition of a catalyst at 180-200°C to the hydrochlorination reactor, (maintained at 350°C) which yields methyl chloride.[5] The exit gases from the reactor pass through a quench tower, scrubber, and drying tower prior to yielding methyl chloride.[5] Methyl chloride then undergoes further chlorination, stripping, and distillation to yield MC and chloroform. These chlorination processes are illustrated by the following reactions.[3,5]

$$\underset{\text{(methanol)}}{CH_3OH} + \underset{\text{(hydrogen chloride)}}{HCl} \xrightarrow[\text{vapor-phase}]{\text{catalyst}} \underset{\text{(methyl chloride)}}{CH_3C} + \underset{\text{(water)}}{H_2O}$$

$$\underset{\text{(methyl chloride)}}{CH_3Cl} + \underset{\text{(chlorine)}}{Cl_2} \text{ ----> } \underset{\text{(methylene chloride)}}{CH_2Cl_2} + \underset{\text{(hydrogen chloride)}}{HCl}$$

$$\underset{\text{(methylene chloride)}}{CH_2Cl_2} + \underset{\text{(chlorine)}}{Cl_2} \text{ ----> } \underset{\text{(chloroform)}}{CHCl_3} + \underset{\text{(hydrogen chloride)}}{HCl}$$

$$\underset{\text{(chloroform)}}{CHCl_3} + \underset{\text{(chlorine)}}{Cl_2} \text{ ----> } \underset{\text{(carbon tetrachloride)}}{CCl_4} + \underset{\text{(hydrogen chloride)}}{HCl}$$

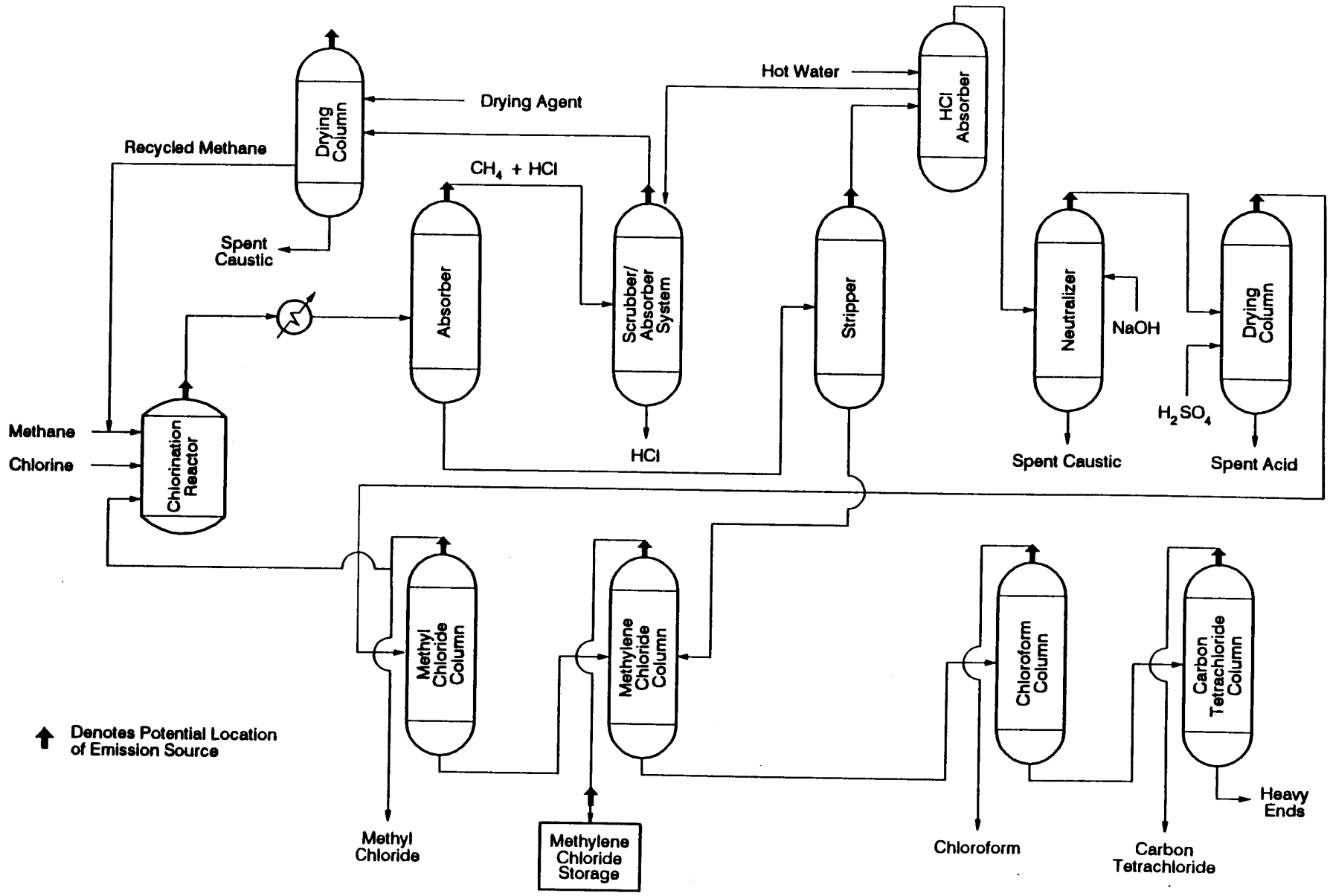

Source: Reference 3

6327210R

Figure 2. Process flow diagram for the production of Methylene Chloride and co-products by the direct chlorination of methane.

Catalysts that are often employed in this process include cuprous chloride, activated charcoal, and zinc chloride.[3] The hydrochlorination of methanol process to produce MC is illustrated in Figure 3.

EMISSION SOURCES AND CONTROLS

In 1985, producers of MC, in response to Section 114 questionnaires, provided estimates and sources of emissions from their 1983 MC production process. The largest sources of emissions reported by all six plants operating at the time were equipment leaks, storage tanks, and transfer emissions (i.e., loading MC into railroad tanks and truck tanks, and drum filling). Other sources reported by all six plants included process vents, equipment openings, relief devices, and secondary emissions (e.g., wastewater treatment). Because production equipment components, including storage tanks and loading facilities, are often located outdoors, MC solvent losses due to leaks (i.e., from gaskets, pipe couplings, pumps, valves, and in-line sampling ports) are often dispersed directly to the atmosphere.[4]

Equipment Leak Emissions

Equipment emissions result from leaking process equipment that contains either liquid or gaseous MC. These emissions may occur intermittently or continuously. The largest sources of equipment leaks reported by MC production facilities in 1985 were from process valves, flanges, pressure relief devices, and pump seals.[3] Other production process components that may leak include compressors, open-ended lines, and sample connections.

Table 5 presents control techniques and efficiencies applicable to equipment leak emissions.

Storage Tank Emissions

Methylene chloride storage tank emissions result from breathing losses due to changes in barometric pressure and temperature, and working losses due to volumetric changes in the tank from filling or dispensing stored solvent. Outdoor tanks, because they are subjected

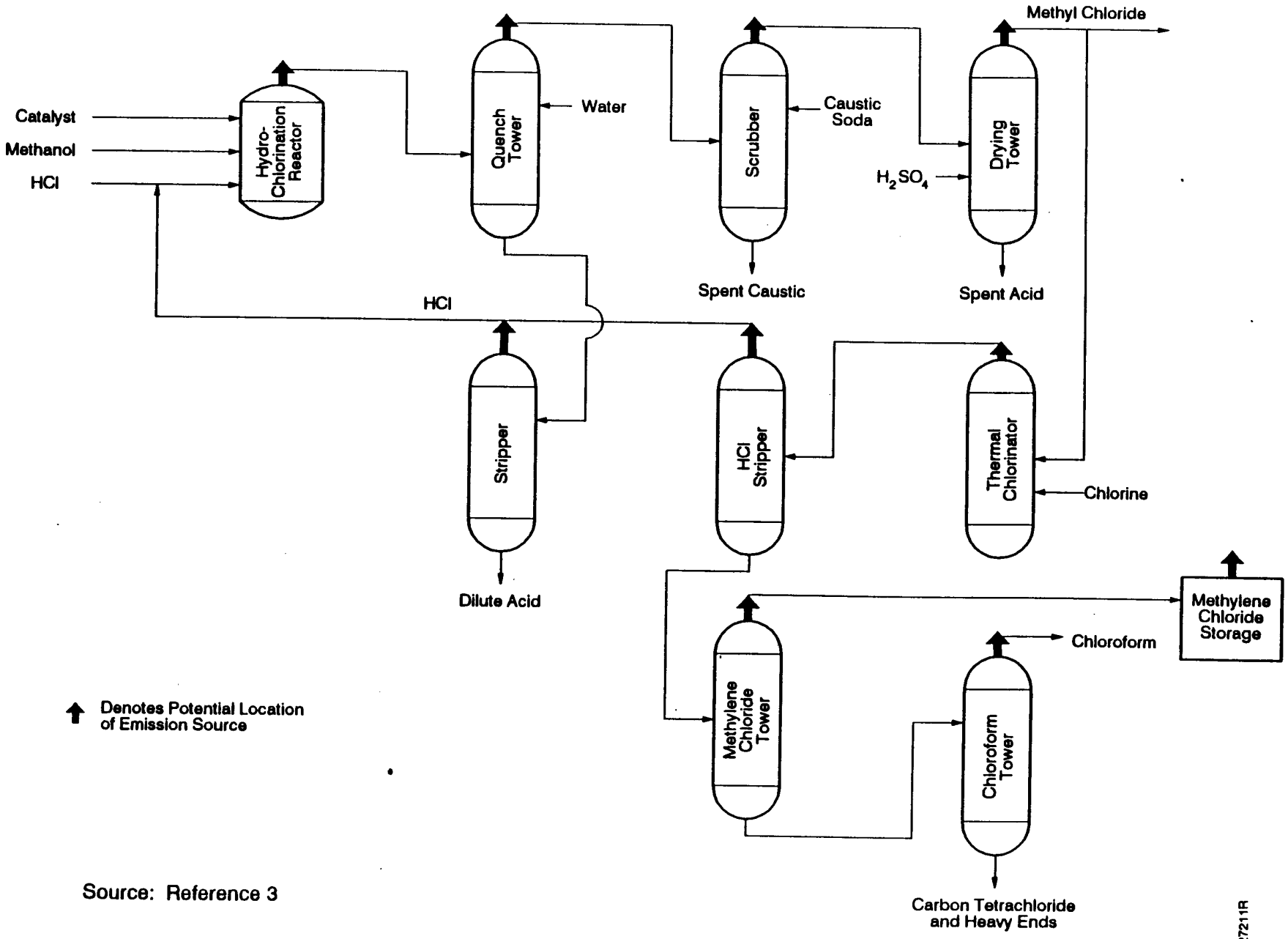

Source: Reference 3

Figure 3. Process flow diagram for the production of Methylene Chloride and co-products by the hydrochlorination of methanol.

TABLE 5. CONTROL TECHNIQUES AND EFFICIENCIES APPLICABLE TO EQUIPMENT LEAK EMISSIONS

Equipment Component (Emission Source)	Control Technique	Percent Reduction
Pump Seals		
Packed and Mechanical	Seal area enclosure vented to a control device (closed-vent system)	100
	Monthly LDAR	61
	Quarterly LDAR	33
Double Mechanical[a]	Closed-vent system	[b]
Compressors	Vent degassing reservoir to control device (closed-vent system)	100
Flanges	Annual LDAR program	[b]
Valves		
Gas	Monthly LDAR	73
	Quarterly LDAR	64
Liquid	Monthly LDAR	59
	Quarterly LDAR	44
Pressure Relief Devices		
Gas	Monthly LDAR (safety concerns)	50
	Quarterly LDAR (safety concerns)	44
	Rupture Disk w/closed-vent system	100
Liquid	N/A	[b]
Sample Connections	Closed-purge Sampling	100
Open-ended Lines	Caps/plugs/flanges/secondary valves	100

Source: Reference 7.

[a]Assumes the seal barrier fluid is maintained at a pressure above the pump stuffing box pressure and the system is equipped with a sensor that detects failure of the seal and/or barrier fluid system.

[b]Not established.

LDAR = Leak detection and repair
N/A = Not applicable

to greater diurnal temperature variation, have a greater potential for MC emission losses than indoor tanks.

Storage tank emissions are controlled through tank modifications (i.e., by adding an internal floating roof to a fixed-roof tank), use of a conservation vent, or by collecting and routing vapors from the storage tank to a control device such as a condenser. A conservation vent, which is a type of pressure- and vacuum-relief valve, is commonly installed on fixed roof tanks to contain minor changes in vapor volume. The use of these valves prevents the release of vapors during times when there are only small pressure differentials (e.g., ±0.2 kPa). Emissions reduction achieved by the use of these valves are dependent on the vapor pressure of the stored liquid. Conversion of a fixed-roof tank to a floating roof could reduce MC emissions by roughly 80-90 percent, depending on the tank design, type of roof seals and fittings, temperature, throughput, number of turnovers, and other factors.[6] Condensers and other product recovery or combustion control devices can be designed for 95 percent efficiency.

Transfer Emissions

Transfer emissions from MC production processes occur from loading MC into tank cars, trucks, or barges for transport. Fugitive emissions during transfer can result through the hatches and other openings of tank trucks and tank cars that are not vapor tight. Loading losses occur by three mechanisms: displacement of vapors that are transferred into the vehicle via the vapor balance system as the previous product was unloaded; displacement of vapors formed in the empty tank by evaporation of residual products from previous loads; and vapor displacement and volatilization as a result of turbulence and vapor/liquid contact during loading of the new product. Transfer emissions may be controlled by vapor balancing, where MC vapors are returned to the storage tanks and the use of submerged loading rather than splash loading. In splash loading, the fill pipe dispensing the chemical is lowered only partway into the transport vessel (i.e., barge, tank car, or tank truck). Significant turbulence and vapor/liquid contact occur during splash loading, potentially resulting in a high degree of vapor generation and loss, submerged loading (submerged fill pipe method and bottom-loading method)

involves loading a fill pipe opening that is below the liquid surface level for most of the loading operation; therefore, minimizing liquid turbulence and reducing the vapor generation that occurs with splash loading. The reader is referred to EPA Publication No. AP-42, Section 4.4.2 for the estimation of loading losses. Alternatively, transfer emissions may be vented to a product recovery device or a combustion device. A product recovery device uses refrigeration, absorption, adsorption and/or compression. The recovered product is piped back to storage. Combustion is generally through thermal oxidation, without any recovery. Both product recovery and combustion methods can be designed to achieve over 95 percent emission reduction.

Process Vents

Production processes may emit MC through process vents from the reactors and distillation columns. These process vent streams are typically routed through product recovery devices (e.g., scrubbers, condensers) as part of the production process, so much of the MC is recovered before the vent stream is emitted to the atmosphere.

No emission factors were found for process vent emissions, which would be highly site-specific. Emission estimates supplied by MC production plants for 1983 are included in the "Emission Estimates" part of this section. In order to further reduce emissions, vent streams could be routed to a combustion device after the final recovery device. Combustion devices can reduce VOC emissions by about 98 percent.[8] No data specific to MC reduction efficiencies by combustion were available at the time this study was conducted.

Secondary Emissions

Secondary emissions from MC production occur from on-site and off-site treatment and disposal of process-generated wastewater, liquid waste, or solid waste. Waste streams can be generated from any of the operations shown in Figures 2 and 3.

There is a potential for air emissions when MC-containing wastewater comes in contact with the ambient air as the wastewater passes through collection and treatment units. Factors that affect

the magnitude of emissions include the MC concentration, wastewater temperature, and collection and treatment system design.

Several types of controls apply to MC emissions from waste and wastewater, including:

- Covers or enclosures such as fixed roofs, floating roofs, and floating membranes;
- Covers or enclosures with closed-vent systems and control devices such as carbon adsorbers or vapor incinerators;
- Treatment processes to remove MC;
- Waste incineration; and
- Process modifications to reduce the amount of MC wasted.

Efficiencies achievable by some of these types of controls are shown in Table 6.[9,10]

Controls and estimated control efficiencies at facilities producing MC in 1985, based on information reported by six facilities, are presented in Table 7.[3]

EMISSION ESTIMATES

Emissions from MC production processes are determined by site-specific sources; therefore, parameters for estimating emissions may vary from site to site. Whenever possible, emissions derivations should be specific to the facility.

Storage tank emissions for fixed-roof storage tanks and floating roof storage tanks for a particular site can be estimated by incorporating site-specific parameters using the EPA Publication No. AP-42 emission factors for storage of organic liquids.[11] Site-specific parameters include, but are not limited to, tank diameter, tank capacity, average diurnal temperature change, turnover factor, average vapor space height, and plant factors. Most storage tanks reported by MC production facilities in 1985 were fixed-roof storage tanks, with only one report of a floating roof storage tank.[3] The equations

TABLE 6. WASTE AND WASTEWATER EMISSION CONTROL TECHNIQUES AND EFFICIENCIES

Type of Control	Control Technique	Efficiency (%)
Cover on storage or treatment tank	Fixed roof	86-99[a]
	External floating roof	93-97[a]
	Internal floating roof	93-97[a]
Cover on surface impoundment	Floating membrane	85
Cover with closed-vent system routed to control device	Carbon adsorber	95
	Condenser	95
	Thermal and catalytic vapor incinerators	98
	Flare	98
Treatment	Steam stripping	99
	Thin film evaporation	99
Waste incineration		99.99

Source: References 9 and 10.

[a] Dependent on concentration of MC in waste stream.

TABLE 7. 1983 REPORTED CONTROLS AND CONTROL EFFICIENCIES FROM FACILITIES PRODUCING METHYLENE CHLORIDE

Company/Location	Type of Emission/Source	1983 Controls	Reported Control Efficiency
Diamond Shamrock Belle, WV	Process		
	• Regeneration Vent	None	0
	• Vent Recovery System 1	Condenser	68.5
	• Vent Recovery System 2	Condenser	26.7
	Equipment Leaks		
	Storage	None	0
	• Fixed-Roof Tank	Conservation Vent Water Cooled Condenser	62.4
	• Fixed-Roof Tank	Conservation Vent Water Cooled Condenser	86.7
	• Fixed-Roof Tank	Conservation Vent Water Cooled Condenser	86.7
	• Fixed-Roof Tank	Conservation Vent Water Cooled Condenser	86.7
	• Fixed-Roof Tank	None	0
	• Fixed-Roof Tank	None	0
	• Fixed-Roof Tank	Conservation Vent Water Cooled Condenser	41.9
	• Fixed-Roof Tank	Conservation Vent Water Cooled Condenser	41.9
	• Fixed-Roof Tank	None	0
	• Fixed-Roof Tank	None	0
	• Fixed-Roof Tank	None	0
	• Fixed-Roof Tank	None	0
	• Fixed-Roof Tank	None	0
	• Fixed-Roof Tank	None	0
	• Fixed-Roof Tank	Conservation Vent Water Cooled Condenser Refrigerator Condenser	90.7
	• Fixed-Roof Tank	Conservation Vent Water-Cooled Condenser	62.4
	Equipment Opening	None	0

TABLE 7. (CONTINUED)

Company/Location	Type of Emission/Source	1983 Controls	Reported Control Efficiency
	Transfer		
	• Tank cars, tank trucks	None	0
	• Barges	None	0
	Secondary		
	• Wastewater Treatment Influent	Steam Stripping/ Carbon Adsorption	N/R
	• Solid Waste Drumming	Landfill	N/R
	• Sludge disposal	Off-site Treatment	N/R
	Relief Devices	N/A	
Dow Chemical Freeport, Texas	Equipment Leaks	None	0
	Storage		
	• #	#	#
	Equipment Opening	None	0
	Handling		
	• Tank trucks, tank cars, ships, barges	None	0
	• Drums	Flume vacuum system	N/R
	Secondary		
	• Wastewater rain and washdown	Nonbiological treatment	0
	• Spent filter elements	Material and Energy Recovery Unit	N/R
Dow Chemical Plaquemine, LA	Equipment Leaks	None	0

TABLE 7. (CONTINUED)

Company/Location	Type of Emission/Source	1983 Controls	Reported Control Efficiency
	Storage		
	• Fixed-Roof Tank	None	0
	• Fixed-Roof Tank	None	0
	• Fixed-Roof Tank	None	0
	• Fixed-Roof Tank	None	0
	• Fixed-Roof Tank	None	0
	• Contact Internal Floating-Roof	N/A	
	Equipment Opening	None	0
	Handling		
	• Tank truck, tank car, barges	None	0
	Secondary	None	0
	• Not identified		
	Relief Devices	N/A	0
LCP Chemicals Moundsville, WV	Process		
	• Purge Condenser	Compression and Condensation	N/R
	• Recovery Tank	None	0
	Equipment Leaks	None	N/R
	Storage		
	• Fixed Roof Tank	None	0
	• Fixed Roof Tank	None	0
	• Fixed Roof Tank	None	0
	• Fixed Roof Tank	None	0
	• Fixed Roof Tank	None	0
	• Fixed Roof Tank	None	0
	• Fixed Roof Tank	None	0
	Handling	None	0
	• Rail cars, truck		

TABLE 7. (CONTINUED)

Company/Location	Type of Emission/Source	1983 Controls	Reported Control Efficiency
	Secondary		
	• Not Identified	Distillation and Recovery	N/R
	• Not Identified		N/R
	• Not Identified	Neutralization and Carbon Adsorption Off-site	N/R
	Relief Devices	N/A	
Vulcan Chemicals Geismar, LA	Process Vents	#	#
	Equipment Leaks	#	#
	Handling	#	#
	Secondary	#	#
	Relief Devices	#	#
Vulcan Chemicals[a] Wichita, KS	Process Vent	#	#
	Equipment Leaks	#	#
	Storage	#	#
	Equipment Opening	#	#
	Handling	#	#

Source: Reference 3.

[#] This information is considered by the company to be confidential.

[a] Company reported greater than 98 percent control, but 98 percent was used in the absence of supporting test data.

N/A = Not Applicable
N/R = Not Reported

for the estimation of storage emissions for a fixed-roof storage tank using AP-42 methodology are presented in Appendix A.

The AP-42 section for evaporative losses from organic liquid storage tanks was available in the October 1992 update to AP-42 known as Supplement E. The update addresses changes that have occurred to the emissions estimation equations for fixed and floating roof storage tanks. A computer model called "TANKS," which incorporates the equation changes and calculates emissions, has also been developed as an aid in performing the extensive and detailed calculations required to estimate emissions. The model contains look-up tables of default values for equation variables when site-specific inputs are not known. It can address situations of both single component liquids or mixtures of compounds within a tank. The model can be obtained from EPA and was made available to the public in September 1992 through the Office of Air Quality Planning and Standards' (OAQPS') Technology Transfer Network (TTN) Clearinghouse for Inventories/Emission Factors (CHIEF) Bulletin Board. The TTN is operated by the Technical Support Division of OAQPS in Research Triangle Park, North Carolina.

As with storage tank emissions, transfer emissions estimation using EPA Publication No. AP-42 factors requires site-specific handling inputs (i.e., dome loading, splash-fill loading, submerged fillpipe, etc.).

Emission estimates for equipment leaks can be calculated in any one of the five ways presented in the EPA publication "Protocols for Generating Unit Specific Emissions Estimates" (the "Protocols" document).[12] The five methods differ in complexity, with the more complex methods yielding more reliable emission estimates.

The simplest method requires that the number of each component type, the MC content of the stream, and the time that the component is in service be known. These values are multiplied by the EPA's average emission factors for the Synthetic Organic Chemical Manufacturing Industries (SOCMI). The SOCMI factors are presented in Table 8. This method is thought to overestimate actual equipment leak emissions; therefore, it should be employed only when other data are not available. Using this method, estimated emissions for each component are calculated by the following equation.[12]

TABLE 8. AVERAGE EMISSION FACTORS FOR EQUIPMENT LEAK EMISSIONS

Equipment	Service	Emission Factor kg/hr/source (lb/hr/source)
Valve	Gas	0.0056 (0.012)
	Light Liquid	0.0071 (0.016)
	Heavy Liquid	0.00023 (0.00051)
Pump Seals	Light Liquid	0.0494 (0.109)
	Heavy Liquid	0.0214 (0.472)
Compressor Seals	Gas/Vapor	0.228 (0.503)
Pressure Relief Seals	Gas/Vapor	0.104 (0.229)
Flanges	All	0.00083 (0.0018)
Open-Ended Lines	All	0.0017 (0.0037)
Sampling Connections	All	0.0150 (0.033)

[a] Reference 13.

Emissions from Component	=	Number of Equipment Components	·	Percent Weight of MC in Stream	·	Component-Specific Emission Factor	·	Number of Hour per year MC Component in Ser

An example using this methodology is presented in Appendix A.

As noted, more accurate equipment leak emission estimates can be obtained by one of the more complex estimation methods. Emission measurement is required in varying degrees for the other four methods. These methods are discussed briefly in the following text. For further calculation details, the reader is referred to the "Protocols" document.

The second method, the leak/no leak approach, is based on the determination of the number of leaking and non-leaking components. These values are multiplied by two different sets of EPA-derived emission factors. The third method divides measurement data results into three ranges; (1) 0-1,000 ppmv, (2) 1,001-10,000 ppmv, and (3) greater than 10,000 ppmv. The number of each component within each range is then multiplied by the component-specific emission factor delineated by the EPA for that range. The fourth procedure uses measurement data along with correlation equations derived by the EPA in earlier work. The fifth method allows the facility to develop its own correlation equations by using more rigorous testing, bagging and analysis of equipment leaks to determine mass emission rates.[12]

The current "Protocols" document was published in 1988. It is currently under revision. The reader is encouraged to refer to the latest version when estimating emissions from equipment leaks.

An emission factor derived for the entire MC production process is presented in Table 9. This factor was derived from 1983 aggregate emission production totals for MC producers with 1983 controls. Site-specific parameters will vary and it is recommended that current site-specific emission factors be used. Also included in Table 9 are equipment leak, storage, and inert gas purge vent product recovery condenser emission factors for both methane chlorination and methyl chloride chlorination MC production processes.[14]

TABLE 9. EMISSION FACTORS FOR METHYLENE CHLORIDE PRODUCTION

Process	Source	Emission Factor [g/kg MC produced (lb/ton MC produced)]
Methane Chlorination	Inert gas purge vent product recovery condenser	0.14 (0.28)
Methane Chlorination	Storage	1.02 (2.04)
Methyl Chloride Chlorination	Inert gas purge vent product recovery condenser	0.03 (0.052)
Methyl Chloride Chlorination	Storage	2.46 (4.92)
Methylene Chloride Production	Entire process	3.00 (6.00)
Wastewater Treatment	Publicly owned treatment works	520 g/kg MC influent (1040 lb/ton MC influent)

NOTE: These emission factors were obtained from the XATEF data base;[14] no information was supplied from the data base on the number of tests or facilities used to derive the factors. It is known, however, that the factor derived for MC production (entire process) was from the six plants in operation in 1984.[3] It is suggested that facility-specific information be used with the AP-42 and "Protocol" documents referenced in the text to produce more accurate site-specific emission estimates.

Source: Reference 14.

One emission factor that can be used to estimate MC emissions based on MC influent to a publicly owned treatment works facility was found in the literature and is presented in Table 9.[14] Emissions of MC from wastewater can be more accurately estimated using site-specific data with the methodology presented in the EPA Control Technology Center (CTC) document, "Industrial Wastewater Volatile Organic Compound Emissions -- Background Information for BACT/LAER Determinations."[10]

REFERENCES FOR SECTION 4

1. "Chemical Profile--Methylene Chloride," Chemical Marketing Reporter, 241(9):42, March 2, 1992.

2. "Methylene Chloride," 1991 Directory of Chemical Producers, SRI International, Menlo Park, United States of America, January 1991. p. 794.

3. Survey of Methylene Chloride Emission Sources, EPA-450/3-85-015, U.S. Environmental Protection Agency. Research Triangle Park, NC, June 1985.

4. Occupational Safety and Health Administration Proposal for New Methylene Chloride Standard, 56 FR 57044, 57054, November 7, 1991.

5. "Selected Processes," Appendix III, EPA-450/3-80-028C, U.S. Environmental Protection Agency, Research Triangle Park, NC, December 1980.

6. Julie Anne Probert, "Conversion of a Fixed-Roof Tank to a Floating Roof Tank - MC Reduction," Calculation to File, Radian Corporation, Research Triangle Park, NC, June 17, 1992.

7. Emission Factors for Equipment Leaks of VOC and HAP, EPA-450/3-86-002, U.S. Environmental Protection Agency, Research Triangle Park, NC, January 1986.

8. "Thermal Incinerator Performance for NSPS." Memorandum from D. Mascone, Radian Corporation, Research Triangle Park, NC, to J. Farmer, U.S. Environmental Protection Agency. June 11, 1980.

9. National Emission Standards for Hazardous Air Pollutants; Benzene Emissions from Chemical Manufacturing Process Vents, Industrial Solvent Use, Benzene Waste Operations, Benzene Transfer Operations, and Gasoline Marketing System, Proposed Rule. 54 FR 38083. September 14, 1989.

10. Industrial Wastewater Volatile Organic Compound Emissions -- Background Information for BACT/LAER Determinations, EPA-450/3-90-004. Research Triangle Park, NC, January 1990.

11. "4.3 Storage of Organic Liquids," Compilation of Air Pollutant Emission Factors: Volume I, Stationary Point and Area Sources, Fourth Edition, AP-42, U.S. Environmental Protection Agency, Research Triangle Park, NC, September 1985.

12. Protocols for Generating Unit-Specific Emission Estimates for Equipment Leaks of VOC and HAP, EPA-450/3-88-010, U.S. Environmental Protection Agency, Research Triangle Park, NC, October 1988.

13. Fugitive Emission Sources of Organic Compounds -- Additional Information on Emissions, Emission reductions, and Costs, EPA-450/3-82-010, U.S. Environmental Protection Agency, Research Triangle Park, NC, 1982.

14. "Crosswalk/Air Toxic Emission Factor Data Base Management System (XATEF), Version 1.2," Diskette, U.S. Environmental Protection Agency, Research Triangle Park, NC, 1991.

SECTION 5
EMISSIONS FROM USES OF METHYLENE CHLORIDE

The major industrial uses of MC include the production of paint strippers (removers) (31 percent of total MC production); plastics (16 percent); polyurethane foam (14 percent); pharmaceuticals (11 percent); degreasing operations (11 percent); aerosol production (8 percent); and photoresist stripping (4 percent). The remaining 5 percent is consumed by various miscellaneous industries such as pesticide production and photographic film processing.

This section presents the process descriptions, emission sources, and emission controls and control efficiencies for the above industrial use categories. When known, emissions estimates and emissions factors or estimation methodologies are provided.

PAINT STRIPPER INDUSTRY

The formulation and use of paint strippers is discussed here. Because little information is available on emissions of MC from formulation and use of paints and coatings, the use of MC for this purpose is discussed with other miscellaneous industrial uses of MC at the end of this section.

A paint stripper is defined as a liquid, liquefiable, or mastic composition whose primary function is to penetrate, blister, and remove paint.[1] A list of 113 U.S. facilities that formulate paint strippers was identified by the U.S. Environmental Protection Agency in 1987.[2] Appendix B includes the names and locations of these facilities. Responses to EPA Section 114 questionnaires pertaining to MC and several other chlorinated organic emission sources with and without emission controls in the paint stripping industry were collected. These include twelve paint stripper formulator facilities, six aircraft maintenance facilities, six military facilities, two automobile producers, and one furniture repair facility.[2,3] The specific facilities are listed in the tables provided with this section.

Separate estimates of MC used in the paint stripping industry range from 61,600 Mg and 74,000 Mg annually.[4] The use of paint

strippers is divided into six major sectors: (1) aircraft maintenance, (2) automobile applications, (3) industrial applications, (4) military applications, (5) furniture manufacture, and (6) household use. An estimate of the MC used by each sector is presented in Table 10. Paint strippers for industrial use typically contain 70-90 percent MC by weight; household paint stripping products typically contain 60-80 percent.[5]

Methylene chloride has many properties that make it a highly effective active ingredient. It easily penetrates, blisters, and lifts paints from many substrates. It is also high in solvency, low in flammability, and is not corrosive or damaging to metal or wood surfaces.[4] All of these properties, plus MC's relatively low price, have prevented the substitution of other solvents in significant quantities. The decrease in the amount of MC used in paint stripping has been slow, but changes in OSHA regulations may increase the incentive for development and use of substitutes.

For any operation, emissions are released from two types of sources at a facility--building openings and process vents. Building openings include general ventilation, doorways, windows, and other fugitive loss points. Process vents include emissions related to a specific process function, which do not enter the in-plant air, but are emitted directly to the atmosphere through a pipe or duct. An exhaust stack from an automotive refinishing spray booth is an example of a process vent.

Process Descriptions

This section discusses paint stripper formulation processes and their use in stripping operations.

Formulation--

Methylene chloride is generally supplied to paint stripping facilities by a contracted chemical supplier. It is usually delivered by tank car; however some smaller facilities may buy MC in 55-gallon drums. Most facilities store MC in large, outdoor, fixed-roof tanks.

TABLE 10. METHYLENE CHLORIDE CONSUMPTION IN 1987 BY PAINT STRIPPER SECTOR

Sector	Methylene Chloride Used[a] (Mg/yr)
Automotive	15,400
Military Maintenance	14,500
Household	13,200
Other Industrial	10,100
Aircraft[b]	5,900
Commercial Furniture[c]	4,400
TOTAL	63,500

Source: Reference 3.

[a] Values shown represent the total MC present in the annual paint stripper use by each sector.

[b] Aircraft facilities include all maintenance and manufacturing operations, but do not include military aircraft.

[c] Commercial furniture includes all paint stripping removal operations performed with office or residential furniture that are not typically performed by consumers.

The paint stripper formulation process occurs in mixing tanks ranging from several hundred to several thousand gallons in volume. Mixing tanks are normally top-filled to three-quarters capacity. The MC may be pumped directly from a storage tank or poured into the batch directly from a 55-gallon drum. After the addition of an activator, a corrosive inhibitor, an evaporation retarder, and a thickener, the resulting product batch is heated to approximately 32°C and mixed for several hours. After mixing, the paint stripper is pumped to an automatic or manually operated filling machine. The product then typically flows through a nozzle inserted through a bung hole on the top of each container. This process can vary from two to ten hours, depending on the size of the product batch.[2]

Stripping Operations--

Most automobile plants use MC-based paint strippers to clean paint spray booths. In this process, the stripper is typically sprayed onto the interior surfaces of the spray booth, allowed to penetrate until the paint blisters, and then removed with a water wash. In addition, many automotive plants use dip tanks to strip paint from automobile parts or assembly equipment. Details of the dipping process vary from plant to plant.

The other major use of MC in industrial plants is to remove paint from floors. For this process, workers manually apply stripper and remove paint by mopping and scraping. Some plants also use paint strippers to purge paint lines. This stripping occurs in an essentially closed system. Stripper is pumped into the lines, allowed to stand, and pumped out when the lines are purged. The used stripper is recovered for reuse, treatment, or disposal.[3]

Methylene chloride-based paint strippers are used to remove paint overspray and clean defective paint jobs in general assembly line operations used to manufacture durable goods.[3] These processes are similar to those used at automobile assembly plants in that the cleaning is done manually in open processes.[3] Some facilities also use MC to clean conveyor hooks.[5]

In commercial aircraft repainting, MC-based paint removers are sprayed onto the aircraft or part surface as a fine mist and allowed to blister the paint. The paint is then washed off with non-metallic

scrapers and is finally washed with water or a solvent rinse.[5] Eighty percent of the MC used in this process evaporates and is emitted through building openings. The remaining MC is collected as runoff from the spraying procedure. This process occurs in large general maintenance aircraft hangars.[3]

Military paint stripping processes are a combination of aircraft and automobile processes. Most of the data associated with these categories are related to aircraft maintenance operations.

In commercial furniture refinishing, paint or varnish is removed by one of four methods. The most common method is by the use of a dip tank. This process is completed by dipping the furniture into an open tank of stripper for a designated time or until the paint blisters. Afterwards, the paint is scraped off manually. This process may be repeated several times if the paint is difficult to dry. A second method is the flow-over system. This system automatically pumps stripping solution to a brush that mechanically sweeps the furniture. Excess stripper is recycled back into the system. Once blistering occurs, the paint is manually scraped off. The spent solution is either recycled, disposed of as hazardous waste, or left on site to evaporate.[5] The third method uses a combination of the dip tank and flow-over system in series. The fourth method is simply manual application and removal.[5]

Most paint stripper consumed by the household sector is used to strip furniture.[5] Consumers who strip furniture themselves typically apply stripper with a brush and remove the paint with a scraper. Insufficient information is available, however, to characterize the emissions of MC from this process.[3]

Emissions

Emissions data are available for paint stripping formulators and for some of the processes that use MC-based paint strippers. However, data for all the end-uses are not available. Some of the end-use data, such as those for aircraft and automotive facilities, are included together because their processes and emission releases are similar. Other end-use categories for which emissions data are well established are presented individually.

Paint Stripper Formulators--

Sources of MC emissions from paint stripper formulation include storage, handling, equipment leaks, and secondary sources. Storage tank emissions are the result of breathing losses and working losses. Breathing losses are mainly caused by diurnal changes in temperature, which can cause expansion and contractions of the tank. Working losses are caused by filling or dispensing of the stored solvent, which in turn forces MC vapors out of the void space of the tank. Emissions from storage tanks are released either indoors or outdoors depending on the tank location. Indoor storage tanks are assumed to have negligible breathing-loss emissions because indoor diurnal temperature changes are expected to be minimal. If pressurized tanks are used to store solvents under pressures greater than atmospheric, they do not have significant emissions.[2]

Handling emissions are the result of mixing tank operations and product container filling. Current data suggest that the major source of handling emissions are from the mixing operations. These emissions may be released through general building openings or process vents associated with mixing. In facilities that do not have process vents for the mixing stage of production, all associated emissions would be manifested as fugitive releases from building openings.

Emissions from process equipment components occur when the liquid or gas process streams leak from the equipment. Process equipment components upstream from the mixing tank typically contain solvent at all times, and equipment leak emissions associated with them are also continuous. The process equipment downstream from the mixing tank is cleaned and drained after each product batch. These emissions only occur during operating hours.

Secondary emissions include MC release associated with the disposal of wastewater, solid waste, liquid waste, and accidental spills.

Emission controls that may be incorporated in the storage tank and mixing area include MC transfer controls (e.g., dome lead, splash-fill, submerged fill-pipe), refrigerated condensers in storage tank areas, and venting combined with carbon adsorbers. A chilling coil with the capacity to lower the MC temperature from 25°F to -7°F at a

rate of 220 g/s (approximately 30,000 Btu/hr), will lower the vapor pressure of MC by more than 75 percent.[2] Equipment leaks can be controlled using a regularly scheduled leak detection and repair (LDAR) program. Leak detection can be accomplished visually or using a portable VOC analyzer to "sniff" around equipment components.

As discussed in Section 4, MC emissions from wastewater and wastes can be controlled by treating to reduce MC, and prior to treatment, by using covers and enclosures, either alone to suppress emissions, or with a closed vent system that captures emissions and routes them to a control device. Treatment techniques applicable to MC-containing wastes and wastewaters include steam stripping, thin film evaporation, and incineration.

Table 11 shows the results of emission control techniques as they apply to specific formulation process components. This table includes controls examined for a previous project, and therefore does not include all the controls discussed above. Emission controls have been the most effective on the two highest sources of emissions, storage and mixing. Refrigerated condensers or carbon adsorbers applied to these sources have been estimated to have an emission reduction efficiency of 95 percent. As discussed in Section 4, internal floating roofs applied to MC storage tanks can reduce emissions by 80 to 90 percent relative to fixed-roof tanks.

Emission estimates for paint stripper formulators were estimated from the responses of 12 facilities to an EPA Section 114 questionnaire during a 1987 EPA project. The emissions estimates were developed from data on the annual consumption of MC and questionnaire information on the emission points associated with the formulation process. Emissions were categorized into storage emissions, handling emissions, and equipment leaks. The estimates developed for the 12 facilities responding to the questionnaire were used to represent the other 101 facilities that EPA had identified. To estimate storage tank emissions for the facilities that were not sent questionnaires, outdoor fixed roof storage tanks were used to calculate the emission factors used to estimate emissions from "typical" facilities because most storage tanks are outdoors.[2]

TABLE 11. CONTROL TECHNIQUES FOR EMISSIONS OF CHLORINATED SOLVENTS FROM PAINT STRIPPER FORMULATORS

Emission Source	Additional Controls	Emission Reduction Efficiency (%)
Storage Tank	Refrigerated condenser	95[a]
Mixing Tanks (Handling)	Carbon adsorption[b]	95[c]
	Refrigerated condenser[b]	95[a]
Equipment Leaks[d]		
Pump Seals (packaged and mechanical)	Monthly LDAR[e]	61[f]
	None analyzed	--
Flanges	Monthly LDAR	59[f]
Valves (liquid)	Monthly LDAR	73[f]
Valves (gas)	Closed-purge sampling	100[f]
Sample Connections Open-Ended Lines	Caps on open ends	100[f]
Secondary Sources	Covers, enclosures, treatment, incineration	85-99.99

[a] Control Technologies for Hazardous Air Pollutants. EPA-625/6-86-014. U.S. Environmental Protection Agency, Research Triangle Park, North Carolina, September, 1987. p. 24.

[b] Control option also includes covering the mixing tank and installing ductwork from the mixing tank to the adsorber or condenser to recover chlorinated solvent emissions.

[c] May, P. and G. Bockol, Memorandum: Assessment of Carbon Adsorbers for Control of Hazardous Air Pollutants. Prepared by Radian Corporation for L. Evans of the U.S. Environmental Protection Agency, December 1, 1986.

[d] Reference 10.

[e] "LDAR" means leak detection and repair.

[f] Percent reduction in VOC emissions based on the emission factors shown in Table A-1 of Appendix A. Methylene chloride emissions are assumed to be reduced by the same percent as total VOC emissions.

These estimates were made by making many assumptions, however. To obtain reliable emissions estimates for an individual site would require additional site-specific information. As discussed in Section 4 for MC producers, site-specific emission estimates can be developed using the AP-42 methodologies for storage tanks, the "Protocols" methodologies for equipment leaks, and the wastewater CTC document methodology for wastewater. Example calculations are given in Appendix A.

National emissions from paint stripper formulators were estimated to be 26,500 Mg/yr in 1988. As of the 1987 study, there were no State regulations requiring emissions reductions. Therefore, implementation of emission controls in the industry were not common at that time. Emissions were separated into emissions from storage, handling, equipment leaks, and secondary sources; emissions estimates are shown in Table 12. The typical model plant emitted about 179 Mg/yr, and 178 Mg of this was from handling (mostly mixing tank) emissions. However, individual plant emissions ranged from about 7 to over 7,000 Mg/yr.

Lower MC content products are currently being developed because of worker exposure issues and consumer demand.[4] Reduction in emissions may occur as paint stripper formulations are developed with lower MC content. However, estimates of emissions reductions that may result from lowering the MC content of finished products have not been made.

Paint Stripping Processes--

For each type of paint stripping process, emissions are segregated into three categories; building openings, process vents, and outdoor storage. Emissions from most paint stripping processes are released through building openings or other openings, such as windows and doors. Other building opening sources include general maintenance operations.

Emissions from these sources were estimated in 1987 during a previous EPA project.[2] The data are more extensive for larger, well-defined industries. Paint stripping emissions estimates are not available for commercial (e.g., metal, office, residential) furniture facilities. In general, a material balance approach was used to

TABLE 12. ESTIMATED METHYLENE CHLORIDE EMISSIONS FROM PAINT STRIPPER FORMULATORS (1988)

Company Name	Location	Methylene Chloride Emissions (Mg/yr)[a]						
					Equipment Leaks			
		Total	Storage	Handling	Outdoor	Indoor	Secondary	Accidental Releases
Benco Sales Inc.	Crossville, TN	87.3	2.5	83.6	0.8	0.03	NR	0.3
Benco Sales Inc.	Fontana, CA	33.3	2.1	30.1	0.8	0.04	NR	0.2
Hillyard Chemical Co.	St. Joseph, MO	140.6	4.2	136.3	0.06	0.04	NR	NR
Jasco Chemical Corp.	Mountain View, CA	110.6	3.8	105.4	1.0	0.3	NR	NR
Kwick Kleen Industrial Solvents Inc.	Terre Haute, IN	6.9	2.4	4.5	0	0.01	NR	NR
Pennwalt Corp. (Turco)	Carson, CA	17.9	1.6	14.9	1.0	0.4	0.03	NR
Pennwalt Corp. (Turco)	Marion, OH	25.2	1.2	23.0	1.0	0.1	NR	NR
Sherwin Williams Co.	Chicago, IL	44.4	2.5	40.6	1.0	0.3	NR	NR
Sherwin Williams Co.	Richmond, KY	434.7	0	433.9	0.8	0.03	NR	NR
Star-Bronze	Alliance, OH	134.1	9.7	123.1	0	1.3	NR	NR
Stripping Products (Bix)	Old Hickory, TN	7.2	1.3	3.9	2.0	0.007	NR	NR
W.M. Barr and Co., Inc.	Memphis, TN	7,046.8	0	7,044.0	2.2	0.6	NR	NR
Model Plant[b]		178.8	0.6	177.9	0.26	0.06	NE	NE
TOTAL[c]		26,500	92	26,010	31	9.3	0.03	0.5

[a] "NR" means no emissions were reported in the questionnaire response. "NE" means emissions were not estimated.

[b] The model represents each of the 101 paint stripper formulation facilities that did not receive a questionnaire. See Appendix B for a list of these companies. Emission estimates for the model plant were developed from the questionnaire responses completed by the 12 facilities.

[c] The total emission estimates represent emissions from all 113 paint stripper formulators.

estimate emissions from each type of stripping process. Tanks were assumed to contain only MC for purposes of estimating emissions. Because paint strippers contain other compounds, such as waxes to retard evaporation, this assumption may slightly overestimate these emissions.

Emissions from use and storage of paint strippers inside buildings are emitted through building openings. For general maintenance and other miscellaneous uses, it was assumed that all of the MC consumed is emitted to the atmosphere. For indoor storage tanks, emissions were calculated using AP-42 equations for fixed-roof storage tanks; the emissions would be released from building openings.

Process vents, such as vents that are routed to the atmosphere from spray booths in automobile assembly, are generally considered to have emissions equal to the rate of MC consumption.

Outdoor storage emissions were based on AP-42 equations for fixed-roof storage tanks. However, many facilities store MC in 55-gallon drums, for which emissions are negligible.

The national total emissions for consumers of MC for paint stripping purposes were estimated at 41,900 Mg/yr in 1987. Emissions from each industry are discussed below.

Automobile assembly emissions of MC that were received in response to a Section 114 questionnaire in 1987 are presented in Table 13. In a previous study, an emission factor was derived from an emissions-to-consumption ratio based on the questionnaire responses, and was applied to all automotive facilities not included in the survey. This emission factor was 0.8 Mg MC_e/MC_c, where MC_e and MC_c represent MC emitted and consumed, respectively.[3] Total national emissions in 1987 from automotive facilities were then estimated to be 12,320 Mg/yr.

Aircraft maintenance facilities emissions are estimated by an emission factor derived from material balance. The total emissions

TABLE 13. ESTIMATED METHYLENE CHLORIDE EMISSIONS FROM TWELVE AUTOMOBILE MANUFACTURING FACILITIES, 1987[a]

Company Name	Location	Methylene Chloride Emissions (Mg/yr)			
		Process Vents	Building Vents	Outdoor Sources	Total
General Motors	Anderson, IN	0	10.5	0	10.5
General Motors	Atlanta, GA	102.0	0	0	102.0
General Motors	Baltimore, MD	124.0	0	0	124.0
General Motors	Bowling Green, KY	9.4	0	0	9.4
General Motors	Columbus, OH	0	196.8	0[b]	196.8
General Motors	Flint, MI	9.7	48.7	0	58.4
General Motors	Kansas City, MO	46.1	7.4	0	53.5
General Motors	Lordstown, OH	199.2	95.5	0	294.7
General Motors	Moraine, OH	199.2	95.5	0	294.7
General Motors	Pontiac, MI	19.8	0	0	19.8
General Motors	Shreveport, LA	33.1	0	1.9[c]	35.0
Ford	Ypsilanti, MI	0	0.2	0	0.2
TOTAL		742.5	454.6	1.9	1,199.0

Source: Reference 3.

[a] This table represents MC emissions estimated only for those automobile manufacturing facilities that completed a Section 114 questionnaire response.

[b] The storage tank at this facility is an outdoor tank and is reportedly controlled; however, insufficient information was available to estimate emissions.

[c] Outdoor dip tank.

for this industry in 1987 were estimated to be 4,720 Mg/yr MC using the same emission factor (0.8 Mg MC_e/MC_c) that has been used in the automotive sector, since the process is similar.

Military emissions can be from a variety of sources. The largest sources identified are aircraft and automobile maintenance. For these activities, emission estimates of 40 percent and 80 percent of MC consumed were applied to all facilities with and without dip tanks, respectively. The 80 percent figure is derived from the data in the aircraft and automotive section.[3] Dip tanks are used for most military paint stripping operations. Nationwide military consumption of MC has been estimated at 14,500 Mg/yr.[3] Emissions have been estimated to be 6,400 Mg/yr using a combination of the 40 percent and 80 percent emission factors. Emissions identified for individual facilities are presented in Table 14.

Household uses consumed approximately 13,200 Mg/yr of MC in 1987.[3] Household emissions are estimated using the material balance approach. The amount emitted is assumed equal to the amount of MC in the product, usually 80 to 90 percent.[6] The emissions-to-consumption ratio (emission factor) for household use as well as automobile and aircraft use is shown in Table 15.

Emission control techniques can be generally applied to each segment of the users of paint strippers, with the exception of household use. Refrigerated condensers and carbon adsorbers may be installed, and obtain similar emission reduction efficiency to that indicated for paint stripper formulators. These can be used for vented storage tanks and stripping operations. Floating roofs may also be applied to fixed-roof storage tanks. Dip tanks may also incorporate increased water cover and drain time as well as a carbon adsorber. The emission reduction efficiency for dip tank controls is from 50 to 60 percent. The efficiencies of these techniques are summarized in Table 16.[3]

The overall efficiency of emission controls at automotive and aircraft maintenance facilities have both been estimated to be 70 percent, based on two automotive manufacturing plants and seven aircraft hangars.[3] The commercial furniture industry is estimated to obtain a 20 percent reduction in emissions by using controls on dip tanks.[3]

TABLE 14. ESTIMATED METHYLENE CHLORIDE EMISSIONS FROM LARGE-SCALE MILITARY USERS OF PAINT STRIPPER, 1987

Installation Name	City, State	Methylene Chloride Emissions (Mg/yr)			
		Process Vents	Building Vents	Outdoor Sources	Total
Anniston Army Depot[a]	Anniston, AL	0	14	0	14
Bergstrom Air Force Base	Austin, TX	0	107	0	107
Corpus Christi Army Depot[a]	Corpus Christi, TX	0	45	0	45
Hill Air Force Base	Ogden, UT	0	186	0	186
Kelly Air Force Base	San Antonio, TX	0	247	0	247
Letterkenny Army Depot	Letterkenny, PA	0	4.8	0	4.8
McClellan Air Force Base	Sacramento, CA	0	188	0	188
Naval Aviation Depot[a]	Cherry Point, NC	0	14	0	14
Naval Aviation Depot	Jacksonville, FL	0	68	0	68
Naval Aviation Depot	Pensacola, FL	0	64	0	64
Naval Shipyard[a]	Philadelphia, PA	0	4.7	0	4.7
Robins Air Force Base[a]	Warner Robins, GA	0	247	0	247
Tinker Air Force Base[a]	Oklahoma City, OK	0	256	0.2	256
Tooele Army Depot	Tooele, UT	0	2.8	0	2.8
Wright-Patterson Air Force Base	Dayton, OH	0	1.6	0	1.6
Model Plant[b]		0	550	0	550
TOTAL[c]		0	6,400	0.2	6,400

Source: Reference 3.

[a] Detailed information available for this facility based on questionnaire response or site visit.

[b] The model represents each of the nine Naval installations not listed individually in this table, that are large-scale users of MC-based paint stripper, but for which MC consumption data are unavailable.

[c] The total emission estimates represent emissions from all 24 military users of MC for large-scale paint stripping operations.

TABLE 15. PAINT STRIPPING EMISSIONS FACTORS

Paint Stripping Application	Emission Factor[a]
Automobile facilities	0.8
Aircraft maintenance	0.8
Military installation dip tanks	0.4
Household uses	1.0

[a] Units are Mg emitted/Mg consumed in paint stripper.

TABLE 16. ADDITIONAL CONTROL TECHNIQUES FOR EMISSIONS OF METHYLENE CHLORIDE SOLVENTS FROM PAINT STRIPPER USERS

Emission Source	Additional Controls	Control Efficiency (%)
Storage Tank	Refrigerated Condenser	95[a]
Stripping in Large, Open Areas	Enclosure and Carbon Adsorption	95[b]
Stripping of Paint Spray Booths	Carbon Adsorption	95[b]
Dip Tank	Water Cover and Increased Drain Time	60[c,d]
	Carbon Adsorber[e]	50[d]

[a] Reference 8.

[b] Reference 9.

[c] Percent reduction in MC emissions based on reduction efficiencies estimated for cold cleaners in the organic solvent cleaning source category.

[d] Reference 10.

[e] This control option only applies to one dip tank that is operated like an open-top vapor degreaser.

REFERENCES FOR PAINT STRIPPER INDUSTRY

1. "Paint--Tests for Formulated Products and Applied Coatings," 1990 Annual Book of ASTM Standards, Volume 06.01, R. Storer, et al, eds. American Society for Testing and Materials, Philadelphia, PA, 1990.

2. "Emission Estimates and Controls for Emissions from Paint Stripper Formulation Facilities (DRAFT)," Memorandum from E. Moretti, Radian Corporation, Research Triangle Park, NC, to the U.S. Environmental Protection Agency, Research Triangle Park, NC, September 11, 1987.

3. "Emissions, Controls, and HEM Inputs for Paint Stripping," Memorandum from C. Most, Radian Corporation, Research Triangle Park, NC, to the U.S. Environmental Protection Agency, Research Triangle Park, NC, December 18, 1987.

4. White Paper -- Methylene Chloride. Halogenated Solvents Industry Alliance, Washington, DC, February 1989.

5. Occupational Safety and Health Administration Proposal for New Methylene Chloride Standard, 56 FR 57049, November 7, 1991.

6. "Impact of Pending VOC Limits in Paints and Coatings," Memorandum from John Forrester, Radian Corporation, Research Triangle Park, NC, to Brian Palmer, Radian Corporation, Research Triangle Park, NC, April 20, 1992.

7. "Summary of Information Obtained Through Telephone Contact with Formulators, Distributors, and Users of Methylene Chloride-Based Paint Strippers," Memorandum from I. McKenzie, Radian Corporation, Research Triangle Park, NC, to the U.S. Environmental Protection Agency, Research Triangle Park, NC, January 22, 1987.

8. Control Technologies for Hazardous Air Pollutants, EPA-625/6-86-014, U.S. Environmental Protection Agency, Research Triangle Park, NC, September 1987.

9. "Assessment of Carbon Adsorbers for Control of Hazardous Air Pollutants," Memorandum from P. May and G. Bockol, Radian Corporation, Research Triangle Park, NC, to L. Evans, U.S. Environmental Protection Agency, Research Triangle Park, NC, December 1, 1986.

10. "Summary of Emission Reductions Achievable by Applicable Control Techniques for Organic Solvent Cleaners," Memorandum from S. Miller and R. Pandullo, Radian Corporation, Research Triangle Park, NC, to Degreasing NESHAP File, October 21, 1987.

PLASTICS MANUFACTURING

Methylene chloride is used in the manufacture of polycarbonate resin, triacetate fiber, and other plastics. The processes and MC emissions for production of these materials are discussed below.

Polycarbonate Resins

Polycarbonates are a special class of polyesters derived from the reaction of carbonic acid derivatives with aromatic, aliphatic, or mixed diols. Polycarbonates are useful for their high impact strength, transparency, low flammability, and toughness. These qualities make them desirable for products that are subject to sudden loads, such as safety helmets, tool housings, appliances, and food dispensing equipment; and also for transparent items such as windows, automotive lenses, safety glasses, and bottles. Polycarbonates are used in greenhouses and for solar energy collection in commercial and residential applications. Medical devices are also made from polycarbonate because it can be sterilized both by autoclave and gamma radiation. Other uses for polycarbonate resins are in computers, aircraft, telephones, and business equipment.

Polycarbonate resins were manufactured by four producers in 1991: General Electric in Mount Vernon, Indiana; Bayer U.S.A. (Mobay Corporation) in Baytown, Texas; Dow Chemical in Freeport, Texas; and Mobay in New Martinsville, West Virginia.[1]

Process Description--

A process flow diagram for polycarbonate resin production is shown in Figure 4. Polycarbonates may be produced by the Schotten-Baumann reaction of phosgene with a diol in the presence of an appropriate HCl acceptor [e.g. bisphenol-A (BPA) with phosgene in the presence of an excess of pyridine], or by a melt transesterification reaction between the diol and a carbonate ester. Transesterification is reported to be the least expensive route; however, that process has been phased out because there were many polycarbonate products that could not be produced using transesterification.

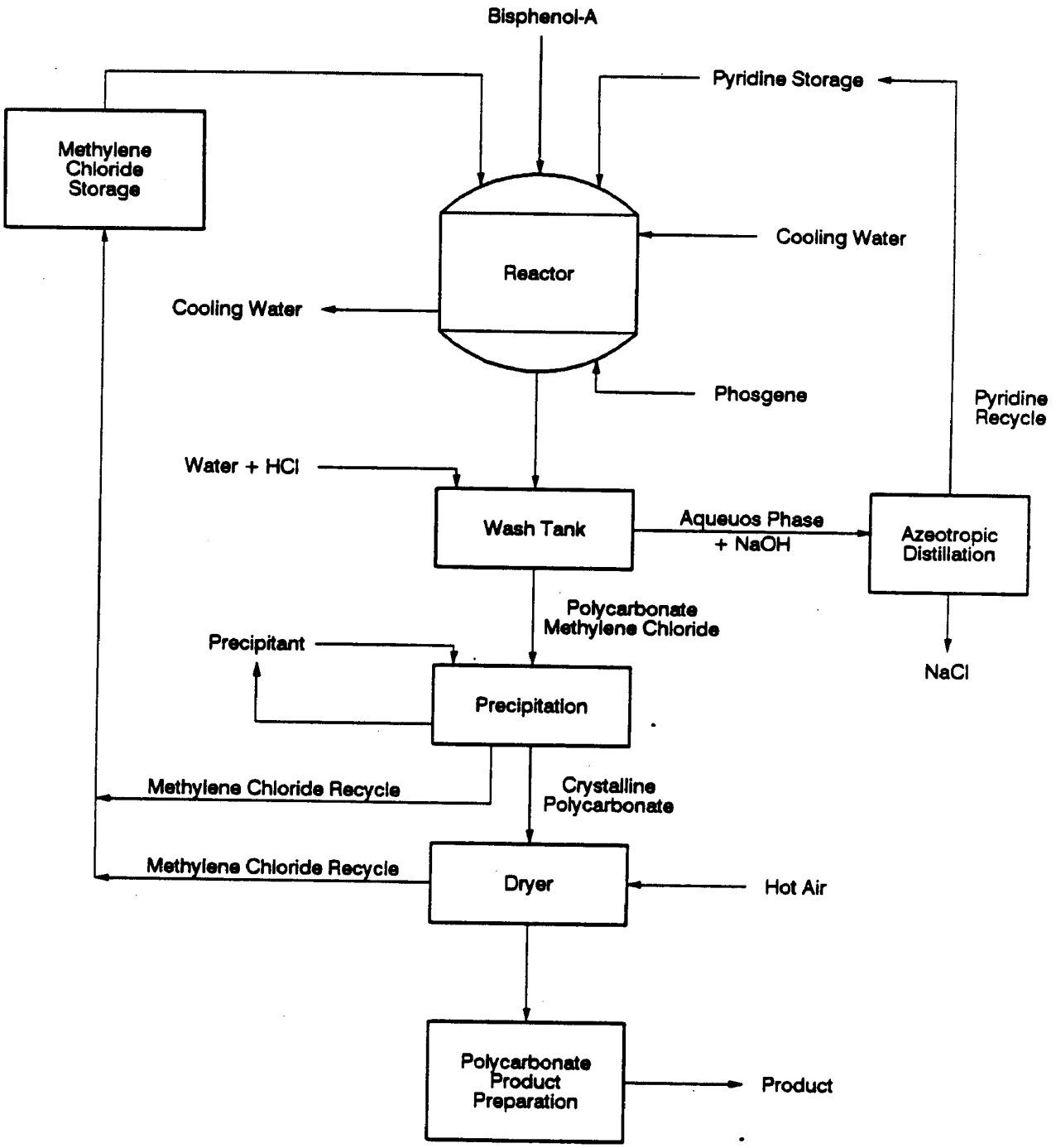

Source: Reference 2

6327265R

Figure 4. Process flow diagram for the production of polycarbonate resin.

Generally, the interfacial process is used in the production of polycarbonate resins. During polymerization, a jacketed vessel equipped with an agitator is charged with the reactants and MC solvent. Phosgene gas is bubbled through the reactor contents. The reaction requires approximately 1-3 hours and is carried out at temperatures below 40°C (104°F). Pyridine and MC are recycled during the process.

The polymerized-liquified reactor contents are then pumped to wash tanks to remove residual pyridine using HCl and water. Methylene chloride is removed by steam stripping. The polycarbonate polymer is precipitated from the polymer-MC stream with an organic compound such as an aliphatic hydrocarbon and is separated by filtration. The filtered polymer is transferred to a dryer, while the solvent is recovered in a distillation column.

Both General Electric and Bayer now use the interfacial process described above. In this process, the BPA is dissolved as a disodium salt in aqueous caustic and reacted with phosgene bubbled into an MC layer. Reaction occurs at the solution’s interface with the polymer "growing" into the MC layer. The MC layer is then separated, and the polymer is isolated by removal of solvent. At this stage, the various producers use a number of different processes, including devolatilization extrusion, granulation, and spray drying.

General Electric-PBG is the largest U.S. manufacturer of polycarbonate resin. At the GE BPA manufacturing plant, MC is a recrystallization solvent for BPA. Recrystallized BPA is dried and fed to the polycarbonate resin production process. Methylene chloride is captured and recycled back for reuse, at an overall recovery rate of 99.5 percent. Primary recovery means include low-temperature condensation and carbon adsorption with regeneration. General Electric is currently planning to make the BPA production process solventless by using a melting process instead of the MC recrystallization process to produce BPA.

At the General Electric polycarbonate resin plant, MC is also used as a process solvent to carry polycarbonate polymer through the reaction and purification process. The polycarbonate resin is then

isolated and the MC is recovered through a distillation process and recycled. Numerous process vents are combined and routed to vent absorbers. The overall MC recovery rate in this operation is 99.8 percent.

At the General Electric polycarbonate-polysiloxane resin plant, which is small compared to the polycarbonate resin plant, MC is also used as a process solvent in the operation. At this operation, the overall MC recovery rate is approximately 93 percent.

As indicated above, the use of MC is a critical element in maintaining product quality and safety specifications. Also, other solvents may crystallize, craze, crack, or mar the surface of objects made from polycarbonates.[1]

Emissions*--

Emissions from polycarbonate resin production are from process vents, equipment leaks, storage, handling, equipment openings, and secondary sources. Information on estimated 1983 MC emissions from the Mount Vernon General Electric and Baytown Mobay facilities was obtained; however, more recent emissions data on these facilities could not be located, nor could emissions data for the Freeport Dow Chemical, or New Martinsville Mobay, plants. Emission sources, controls, control efficiencies, and emission quantities for the Mount Vernon General Electric and Baytown Mobay facilities in 1983 are presented in Table 17.

General Electric reported that the production of polycarbonate resins and proprietary associated processes at the Mt. Vernon facility resulted in 3,578 Mg of MC emissions in 1983. The company indicated that emissions reported for individual sources were either rough estimates or maximum allowable permitted levels and that it could not give exact values for each emission source. General Electric reported four process areas emitting MC. Two of the process areas used MC in polycarbonate synthesis; the other two

---

* Information presented in this section on emissions from polycarbonate resin production was obtained from Reference 2.

TABLE 17. ESTIMATED 1983 EMISSIONS AND CONTROLS AT FACILITIES USING METHYLENE CHLORIDE IN POLYCARBONATE RESIN PRODUCTION

Company/ Location	Type of Emissions	Controls	Reported Control Efficiency (%)	MC Emissions (Mg/yr)	Comments
General Electric	Process				
Mount Vernon, IN	• Hopper Dryers	None	0	17.0	41 dryers
	• Hopper Dryers	None	0	18.6	45 dryers
	• Extruder Die Hoods	None	0	224.6	7 hoods
	• Extruder Die Hood	None	0	4.5	1 hood
	• Extruder Die Hood	None	0	2.5	1 hood
	• Extruder Die Hood	None	0	8.8	1 hood
	• Extruder Die Hood	None	0	13.4	1 hood
	• Extruder Die Hood	None	0	0.2	1 hood
	• Molding Machine Vents	None	0	4.8	2 vents
	• Q.A. Hood Vent	None	0	6.4	4 vents
	• Extruder Die Vents	None	0	391	17 vents
	• Extruder Vacuum Pump	None	0	86.4	6 pumps
	• Extruder/Die Vent	None	0	11.2	3 vents
	• Extruder/Die Vent	None	0	93.8	8 vents
	• Molding Machine	None	0	3.2	2 units
	• Vacuum Stripping Blowers	None	0	0.6	4 units
	• Vent Gas Absorber	Water Scrubber	87	477.3	1 vent
	• Vent Gas Absorber	Water Scrubber	87	477.3	1 vent
	• Carbon Adsorption System	Carbon Bed	87	46.2	
	• Filter Receiver	None	0	85.6	2 units
	• Filter Receiver	None	0	85.6	2 units
	• Weight Hopper Vent	None	0	0.6	2 units

TABLE 17. (CONTINUED)

Company/ Location	Type of Emissions	Controls	Reported Control Efficiency (%)	MC Emissions (Mg/yr)	Comments
GE, Mount Vernon	• Feed Hopper	None	0	0.3	1 unit
(Cont'd)	• Surge Hopper	None	0	7.6	2 units
	• MC Storage Tank	Conservation Vent	10	17.6	
	• Storage Silo	None	0	170	
	• Solvent Recovery	Carbon Bed	87	347	
	• MC Dryer System	Knock Out Pot/ Demister	50	79.6	
	• Tar/Isomer Storage	None	0	0.4	
	Equipment Leaks				
	• Building 14/16	Photo ionization detection system	0	175	Monitors 40 points
	• Building 15/31	Photo ionization detection system	0	71.8	Monitors 10 points
	Storage				
	• 44 process and storage vessels	Vent gas absorbers	87	0.1	Bldg 14/16
	• Pressure vessel	Conservation vent	10	1.5	Bldg 15/31
	Equipment Opening	None	0	63.7	
	Secondary				
	• Biological Treatment	None	0	584	
TOTAL				**3,578**	
Mobay Chemicals,	Process				
Baytown, TX	• Vent	Scrubber	98	0.3	
	• Reactor Vent	None	0	0.07	
	• Reactor Vent	None	0	0.05	

TABLE 17. (CONTINUED)

Company/ Location	Type of Emissions	Controls	Reported Control Efficiency (%)	MC Emissions (Mg/yr)	Comments
Mobay Chemicals (Cont'd)	Equipment Leaks	Monthly portable gas chromatograph check, pressure relief device controls	NR	51.2	
	Equipment opening	None	0	16.5	Primarily sampling openings
	Storage				
	• Fixed-Roof Tank	Vent to scrubber	98	0.006	27,100 gallons
	• Fixed-Roof Tank	Vent to scrubber	98	0.006	150,000 gallons
	• Fixed-Roof Tank	Vent to scrubber	98	0.1	85,200 gallons
	• Fixed-Roof Tank	Vent to scrubber	98	0.1	85,200 gallons
	• Fixed-Roof Tank	Vent to scrubber	98	0.003	27,100 gallons
	Secondary				
	• Wastewater stream	Biological & Carbon Treatment	NR	22.0	
	• Contained solvent	Incineration	NR	0	
	• Process water trench	Biological & Carbon Treatment	80	11.0	
	• Leaks and spills	None	0	41.4	
	Handling				
	• Railcar, tank truck	None	0	0.6	
TOTAL				**143**	

Source: Reference 2.

areas were used in polycarbonate processing, and MC emissions resulted from residual in materials processed.

Process vents were the source of 75 percent of the total MC emissions for this plant. Many of the smaller vents were uncontrolled, but some of the larger vents were controlled by scrubbers or carbon adsorbers, achieving 87 percent control.

The second largest MC emission source at General Electric was secondary sources (16 percent). General Electric estimated that approximately 1,818 kg/day MC was discharged to the site sewer system. Approximately 218 kg/day reached the wastewater treatment plant for on-site biological treatment. The remaining 1,600 kg/day were lost to the atmosphere in three areas: (1) the brine recovery operation, (2) the sewer system, and (3) the wastewater treatment plant prior to biological treatment. As discussed in Section 4, emissions from wastewater prior to treatment can be reduced by using covers and enclosures, either alone or with a closed-vent system and control device.

Equipment leaks were the third largest source of emissions (7 percent) generated at the General Electric plant. Equipment counts were reported for two of four process areas; the other two process areas did not have equipment in MC service, and emissions resulted from residual MC in the materials processed. General Electric reported that multipoint programmable sequence area monitoring was performed to detect MC leaks using a photo ionization detection HNμ system. However, because it did not report the frequency of repair, uncontrolled emission factors were used to estimate equipment leak emissions, possibly resulting in an overestimate. Leak detection and repair programs can reduce emissions from equipment leaks.

General Electric based the equipment openings emissions estimate on field estimates of quantities in the system at the time of opening. Emissions were extrapolated using the number of occurrences and assuming 100 percent loss.

The polycarbonate resin process generated 143 Mg of MC emissions at Mobay Chemical in Baytown, Texas, in 1983. Table 17 documents

emission sources, controls, control efficiencies, and 1983 emission amounts for this facility.

Secondary sources were the largest source of MC emitters at 74.4 Mg/yr. Mobay listed three sources for these emissions: (1) a wastewater stream going to biological and carbon treatment (22.1 Mg); (2) a process water trench also going to biological and carbon treatment (10.9 Mg); and (3) other leaks and losses prior to maintenance work (41.4 Mg).

Emissions from equipment leaks were 51.2 Mg in 1983. Mobay had 33 pressure relief devices protected by rupture disks. Twenty more relief valves were vented to a scrubber to control emissions, and five pressure relief valves were unprotected.

Mobay's recorded process variables each shift to detect obvious leaks. Also, a daily walkthrough was performed to spot leaks. A solvent inventory was taken each week to account for any unusual loss. All pump seals and vent locations were checked monthly with a portable gas chromatograph. In addition, one technician devoted half-time to solvent loss prevention. Mobay believed this monitoring system was reasonably effective for obvious losses. Mobay did not report the frequency of leak repairs, and emissions from equipment leaks were calculated using uncontrolled emission factors. Therefore, these emissions may be overstated.

Losses from equipment openings were 16.5 Mg in 1983. Forty-four percent of equipment openings losses were due to daily sampling. Mobay reported that approximately 50 samples are taken per day. Filter replacement contributed about 37 percent of MC emissions. Replacement of an 80,000-gallon product tank emitted 1.6 Mg. Other equipment opening losses were due to routine maintenance of purification equipment, pump seal replacement, heat exchanger replacement, and from opening open solvent lines to remove pluggage.

Solvent handling losses were 0.6 Mg/yr. Methylene chloride was delivered by railcar and/or tank truck. No control equipment was used to reduce emissions during unloading.

Emissions from three process vents totalled 0.4 Mg in 1983. A process vent scrubber operating at 98 percent MC removal efficiency emitted 0.3 Mg MC. The emission level was determined from inlet and outlet sampling and gas chromatograph analysis of the samples for composition. Two reactor vents that emitted MC only when the reactor was being filled had a combined annual loss rate of about 0.1 Mg/yr. Emissions occurred from these vents for only about 10 minutes per month.

Losses from five fixed-roof storage tanks were about 0.2 Mg in 1983. All storage tank conservation vents were vented to a scrubber. Mobay reported that sampling indicated that this control technique reduced emissions by 98 percent.

Information on the amount of MC used or the amount of polycarbonate resin produced at the Mobay and General Electric facilities was not available to allow development of emission factors per unit of MC used or per unit of product produced. However, as discussed in depth under MC production, storage and handling emission factors can be derived by using information on the types of storage tanks and transfer equipment found at a specific site to select the appropriate factors for that site from EPA Publication No. AP-42. Also as described in Section 4.0, the methodologies presented in "Protocols for Generating Unit-Specific Emission Estimates for Equipment Leaks of VOC and VHAP" (volatile hazardous air pollutant) can be used to estimate emissions from equipment leaks. An example of one of the simpler methodologies is presented in Appendix A, Section 2. Emissions of MC from wastewater can be estimated using site-specific data with the methodology presented in the EPA CTC document on VOC emissions from industrial wastewater.

Triacetate Fiber

Methylene chloride is used by one company, Celanese Corp., in Cumberland, Maryland, as a solvent for spinning cellulose triacetate fibers. It is estimated that all of the approximately 2.0 Mg of MC used at this facility are released to the air. Methylene chloride, which is an excellent and inexpensive solvent for the production of secondary acetate, has been used for triacetate production since 1930. Nearly all of the cellulose triacetate is used for ladies’ apparel.

Much of it is used to make 100 percent continuous-filament open fabric. High bulk Tricel is used in knitwear.[1]

Process Description--

No information was located on the triacetate fiber manufacturing process used at Celanese's Cumberland, Maryland, facility. However, a 1985 process description was obtained for its Rock Hill, South Carolina, plant, which is no longer producing triacetate fiber.

A solution of MC and methanol is fed into a batch mixer containing triacetate polymer flakes and other dry ingredients. The solvents are slowly mixed with the solids until the solids are completely dissolved, forming the liquid polymer dope. The dope is then filtered and pumped to the extrusion area, where it is preheated, and then extruded and dried. The dried fibers are spun onto bobbins until further processing is performed, which may include twisting, coning, and beaming.[2] A process flow diagram is shown in Figure 5.

Solvents that can be substituted for MC in the manufacture of cellulose triacetate are chloroform, formic acid, glacial acetic acid, dioxan and cresol.[1]

Emissions--

No information was located on emissions of MC from triacetate fiber manufacture at the Celanese Cumberland, Maryland, plant. Estimated emissions from the Rock Hill, South Carolina, plant in 1983 are given in Table 18. It is not known whether this information is representative of the current MC emissions, sources, and controls at the Cumberland, Maryland, plant. Because of lack of information, emission factors could not be developed for this process. As discussed in depth in Section 4, EPA methods from the AP-42 and "Protocols" documents can be used with site-specific data to develop emissions estimates for storage, transfer, and equipment leak emissions from triacetate fiber production.

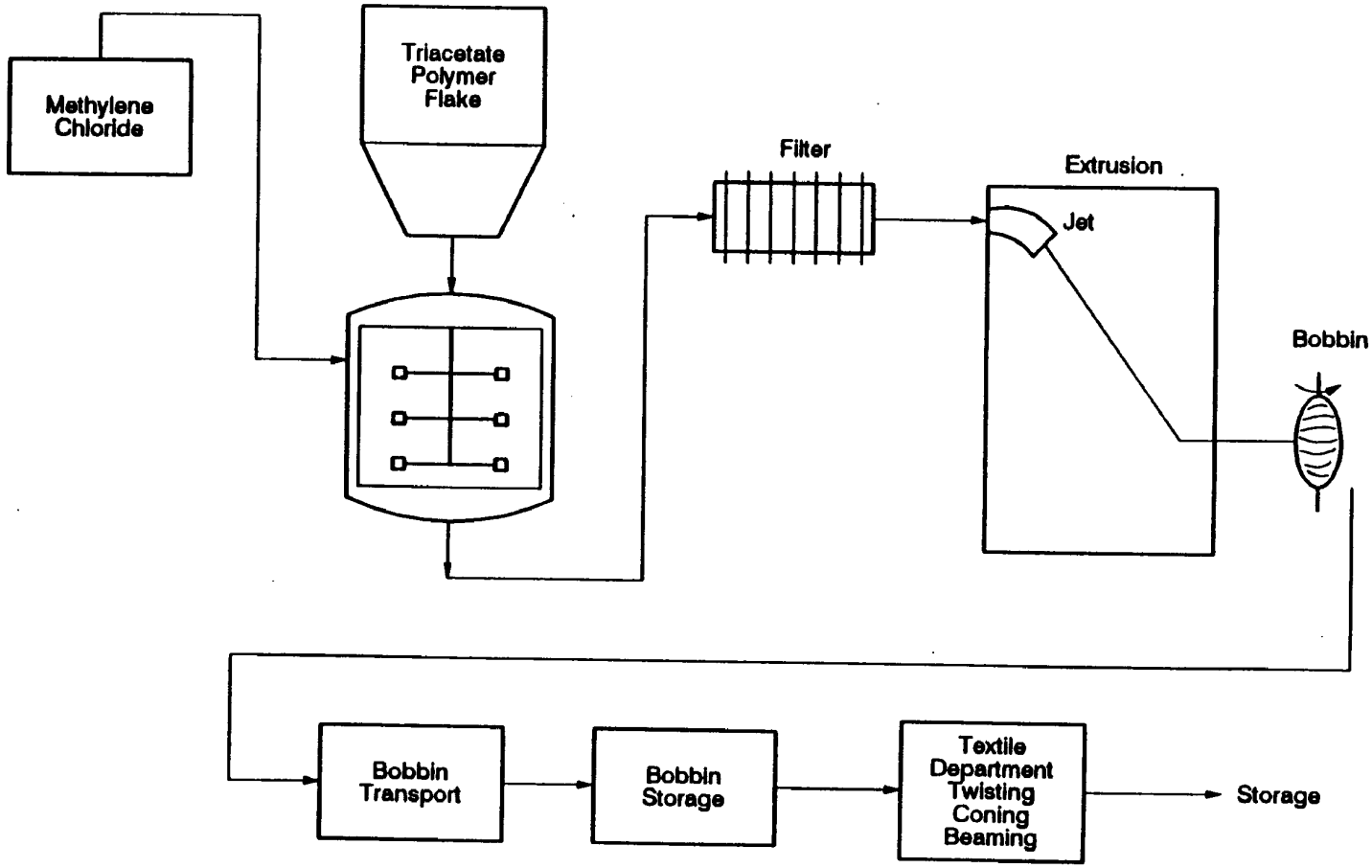

Source: Reference 2

Figure 5. Process flow diagram for the production of triacetate fibers.

TABLE 18. ESTIMATED METHYLENE CHLORIDE EMISSIONS AND CONTROLS ASSOCIATED WITH TRIACETATE FIBER MANUFACTURE[a]

Types of Emissions	Controls	Reported Control Efficiency (%)	MC Emissions (Mg/yr)	Comments
Process				
• Solvent recovery	Carbon adsorption	98[b]	5,150	
Equipment leaks	Infrared gas analyzers	0	22.0	
Transfer				
• Tank truck, tank car	Vent to solvent recovery	NR	0.5	
Relief devices	NA		2.7	Mixture rupture discharge

[a] Emissions data apply to a Celanese chemical plant in Rock Hill, S.C. in 1983. Data taken from Reference 2.

[b] Greater than 98 percent efficiency reported, but only 98 percent is accepted without supporting test data.

Plastics Production

In 1983, the General Electric facility in Pittsfield, Massachusetts, was reported as using MC in a plastics production operation.[2] Current data verifying the continued use of MC at this plant could not be located, nor could data on the use of MC for plastics production at other facilities.

Process Description--

At the time the 1983 information was gathered on plastics production at its Pittsfield, Massachusetts, plant, General Electric considered information on process description and end products confidential.[2] Because non-confidential information from other plants was not located, descriptions of processes using MC in plastics production are not available.

Emissions*--

Process vents and equipment leaks were the major emission sources at the General Electric facility. It also reported emissions from secondary sources, storage tanks, and equipment openings. Transfer emissions were unknown at that point because the facility had just instituted a new bulk handling system for pumping solvent from tank trucks into on-site storage tanks. Emission sources, controls, control efficiencies, and emission levels for 1983 are presented in Table 19.

Total MC emissions at this facility were 74.0 Mg in 1983. Emissions from process vents were 64.9 Mg of MC (88 percent of total MC emissions). General Electric reported 13 process vents, with three vents controlled by condensers. A precipitation condenser vent and a dryer vacuum pump were both controlled by condensers operating at 50 percent MC removal efficiency. Emissions from these vents after control were 27.2 Mg and 9.8 Mg, respectively. The precipitation condenser vent was the largest single MC emission point at the facility. An MC still vent was controlled by a condenser operating at 97 percent removal efficiency. Emissions from this vent were 8.2 Mg.

---

* Information presented in this section on emissions from plastics production was obtained from Reference 2.

TABLE 19. ESTIMATED METHYLENE CHLORIDE EMISSIONS AND CONTROLS ASSOCIATED WITH PLASTICS PRODUCTION AT GENERAL ELECTRIC, PITTSFIELD, MASSACHUSETTS IN 1983

Types of Emissions	Controls	Reported Control Efficiency (%)	MC Emissions (Mg/yr)	Comments
Process				
• Reactor vent	None	0	4.6	
• Phosgenation reactor	None	0	2.4	
• Precip. room vent	None	0	1.8	
• Work-up room vent	None		1.3	
• Stripper room vent	None	0	1.8	
• Stripper room vent	None	0	1.8	
• Precip. condenser vent	Condenser	50	27.2	
• MC still water tank	None	0	0.9	
• Area vent	None	0	2.7	
• MC still vent	Condenser	97	8.2	
• MC/water separator	None	0	1.8	
• Still decant tank	None	0	0.5	
• Dryer vacuum pump	Condenser	50	9.8	
Equipment leaks	None	0	6.1	Leaks detected by observation and weekly mass balance
Storage				
• Fixed-roof tank	To Condenser	50	0.09	4,100 gallons
• Fixed-roof tank	None	0	0.06	500 gallons
• Fixed-roof tank	None	0	0.06	500 gallons
• Fixed-roof tank	To Condenser	50	0.007	1,500 gallons
• Fixed-roof tank	To Condenser	50	0.1	1,250 gallons
• Fixed-roof tank	None	0	0.005	250 gallons
Equipment Opening	None	0	2.3	
Secondary				
• Aqueous waste stream	To Sewage Treatment	80	0.1	
• Drums	To Haz. Waste Disposal	90[a]	0.01	

[a] Greater than 98 percent efficiency reported, but only 98 percent is accepted without supporting test data.

Source: Reference 2.

The 10 remaining process vents were uncontrolled. Emissions ranged from 4.6 Mg for reactor area ventilation to 0.9 Mg for the MC still-water tank.

Equipment leaks resulted in MC emissions of 6.1 Mg/yr. Valves emitted approximately 3.1 Mg of MC (51 percent). Pump seals and flanges emitted 1.0 Mg (16 percent) and 0.8 Mg (13 percent), respectively. General Electric reported that there was no automated leak detection system for MC. Any significant MC leaks were generally determined by operator observation. Also, a weekly mass balance inventory was maintained for MC usage. Substantial increases over the normal process usage requirements initiated a full system investigation to determine if any leakage was occurring.

Equipment opening losses were approximately 2.3 Mg in 1983. General Electric estimated this loss for approximately 2,000 openings, 1,300 of which were an end-cap reactor nozzle opened during each batch to add reactants. In addition, another reactor nozzle is opened 650 times per year. Other equipment openings involved work-up tanks, Westfalia centrifuges, filter feed tanks, filters, MC stills, and separator/decant tank. General Electric provided an overall equipment opening loss estimate, but did not identify emissions by specific sources.

General Electric maintained six fixed-roof storage tanks containing MC. The emissions from these tanks totalled 0.3 Mg/yr. The tanks ranged in volume from 250 to 4,100 gallons. Three of the tanks were vented to a vent condenser with 50 percent control efficiency. Emissions from two other tanks were piped to a controlled tank, while one tank was uncontrolled.

A bulk handling system for MC was instituted in 1983. Tank truck deliveries were made to a fixed-roof, 4,100-gallon storage tank. The tank car feed line was connected to a pump at the storage tank base and delivered into the storage tank. Vapors were piped to the plant vent system, which condensed most of the MC vapors. General Electric reported air intake was through a canister and a vacuum relief valve.

Two waste streams emitted about 0.2 Mg of MC in 1983. The major secondary emission source was a liquid stream to the sewage treatment

plant, which emitted 0.15 Mg of MC. A second waste stream was unidentified. This stream is contained in drums that were sent to a licensed hazardous waste disposal company. Emissions (0.01 Mg) occurred when the waste stream was transferred to drums.

Because of the lack of information about the actual production process, emission factors on a per-MC-used or per-product-produced basis could not be developed. As described in Section 4.0 on production, the methodologies presented in "Protocols for Generating Unit-Specific Emission estimates for Equipment Leaks of VOC and VHAP" (volatile hazardous air pollutant) can be used to estimate emissions from equipment leaks. An example of one of the simpler methodologies is presented in Appendix A. Storage and handling emission factors can be derived by using site-specific information on the types of storage tanks and transfer equipment to select the appropriate factors from EPA Publication No. AP-42.

REFERENCES FOR PLASTICS MANUFACTURING

1. Occupational Safety and Health Administration Proposal for New Methylene Chloride Standard, 56 FR 57047, November 7, 1991.

2. Survey of Methylene Chloride Emission Sources, EPA-450/3-85-015, U.S. Environmental Protection Agency, Research Triangle Park, NC, June 1985.

FLEXIBLE URETHANE FOAM PRODUCTION INDUSTRY

Polyurethane products are generally complex plastics that form from a reaction of liquid isocyanate components with liquid polyol resins.[1] The resin component can also contain blowing agents, combustion retarding agents, and catalysts. Polyurethane products include polyurethane foams, flexible polyurethane foams, and polyurethane elastoplastics.[1] Polyurethane foams are solid.

Methylene chloride is the leading auxiliary foam-blowing agent used in the production of flexible urethane foams. Its use in the foam industry is largely in the production of flexible slabstock foam.[2] It also has some use in the production of flexible molded foam.[3] The development of new catalysts enabled the use of MC in a variety of foam formulations.

Methylene chloride is considered to be a physical blowing agent (also known as "solvent") that assists in foam cell formulation, as it is a low boiling point (39.8°C) halogenated hydrocarbon that does not decompose.[3,4] There are indications that MC is also used to clean the molding and the foam mixing head, and as a carrier solvent for the mold release agent.[3]

There are an estimated 180 foam-blowing companies in the United States, including slabstock and flexible molded foam companies.[1] In 1991, these companies consumed approximately 14 percent of the total MC production.[2] Polyurethane foam industry consumption of MC in 1984 was estimated to be 70 percent slabstock urethane foam and 30 percent flexible molded foam, derived from Halogenated Solvents Industrial Alliance (HSIA) data and Section 114 questionnaires.[3] The 1991 estimate shows a 20 percent increase in use in polyurethane foam production from the 1984 estimate. Flexible urethane molded foam facilities were not located at that time because this product was considered to be a less significant source of MC emissions. The present location of all existing foam-blowing facilities was not determined. The following sections will discuss the industry production processes, emission sources, and emission estimates of MC from flexible urethane foam production.

Process Description

In order to produce a foam, it is necessary to generate nucleating bubbles within a gelling mixture. Polyurethane elastoplastics are produced using either polyether polyols or polyester and diisocyanates (combustion-retarding agents may also be employed). These foams are available in pourable or injectable liquid, preformed pelletized solids, and sheetstock. Flexible foams are produced from polyether polyols, toluene diisocyanate (TDI), and polymeric isocyanates.[1] These foams are generally low-density, soft foams that incorporate carbon dioxide gas as the primary blowing agent.[1] In the production of rigid polyurethane foam (made from polyether polyols, combustion-retarding agents, polymeric isocyanates, and low-boiling halocarbon blowing agents), MC is not used as a blowing agent, but is often employed for filling and cleaning the mixing head.

As mentioned previously, polyurethane foam production (especially slabstock urethane foam) is the primary MC consumption source within polyurethane foam-blowing production, and will be the focus of the discussion in the following text.

Flexible polyurethane foam slabstock and flexible molded foam are produced by the exothermic reaction of TDI with a polyol. As mentioned, carbon dioxide is the primary blowing agent, with MC being used as an auxiliary blowing agent. Production involves the mixing of TDI and polyol directly with the blowing agents, catalysts (i.e., tertiary amines), foam stabilizers, and flame retardants.

The foam-producing reaction occurs within the "foam tunnel" of the process production line. These foam tunnels are generally conveyorized in-line systems enclosed on the sides by plastic curtains. Chemical ingredients are normally pumped from tanks or 55-gallon drums to a mixing head and discharge nozzle.[3] The nozzle pumps the liquid reactants onto the conveyor belt within the tunnel. An exothermic reaction of the chemicals produces the primary blowing agent (e.g., carbon dioxide), which results from the reaction of isocyanate with water, and vaporizes the secondary blowing agent (e.g., MC), producing the foam cells during its formation. The heat

evolved from the reaction of the isocyanate with the polyol and with water is more than sufficient to boil or evaporate MC.

Foam slabs at varying dimensions reach their maximum height within 4 minutes after the chemical liquid reactants are discharged onto the conveyor. When this process involves the reaction mix being poured into a closed mold, it produces a flexible polyurethane molded foam.[1] When such molds are not used, slabstock results. Polymerization (e.g., gelling) reactions and further solidifying of the foam occurs prior to the foam exiting the tunnel (an estimated 10 minutes). Following exit from the tunnel, the foam is further cooled, prepared (e.g., sawed into slabs) and packaged.[3]

One of the most important processing parameters is temperature. Temperature changes can affect the viscosity of the mixture, which influences the pump's metering ability. Pumps are metered to enable proper mixture composition, and differ according to whether high or low pressure machines are used, or whether the process is done on a batch or continuous basis.[1] Figure 6 is a typical schematic flow diagram of flexible polyurethane slabstock foam production that illustrates the foam line tunnel conveyor and product preparation steps.[3]

Emission Sources and Controls

The primary MC emission sources from polyurethane foam production facilities include process vents, equipment leaks, and storage tanks.

Process vent emissions are primarily from vents above the foam tunnel and in the foam curing area. Data obtained from a foam manufacturer in 1986 included mass balance data that indicated that approximately 60 percent of the initial MC charge is emitted in the tunnel and approximately 40 percent is emitted in the curing area.[3] Section 114 questionnaire responses from foam manufacturers reporting the use of MC as an auxiliary blowing agent indicated that control devices were not being used to reduce process vent emissions.[3] Industry still reports that process vent controls are not employed because of the expense; however, technological research on process vent controls is underway.[5] Industry also reports significant research on process modifications to eliminate the use of MC in polyurethane

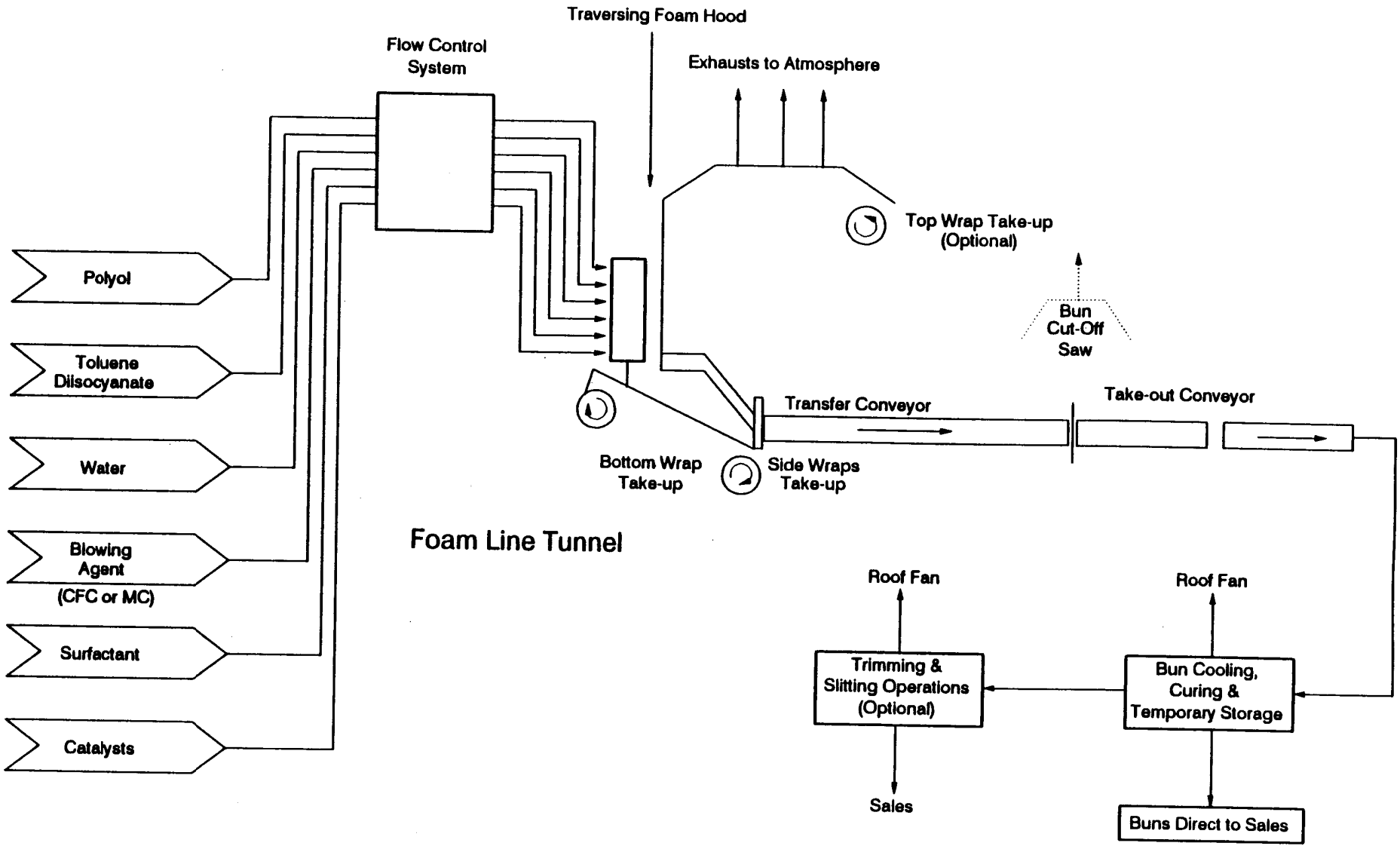

Source: Reference 3.

Figure 6. Schematic flow diagram of polyurethane flexible foam production.

6527476R

foam production.[5] An emission factor for uncontrolled process vents (foam tunnel, curing area) in the polyurethane foam (flexible slabstock) production is presented in Table 20.[6] This emission factor was derived on the assumption that MC consumption by the industry equals process vent emissions, plus equipment leak and storage emissions.[3]

Equipment leaks in polyurethane flexible foam production process occur when the liquid or gas process stream leaks from components. The following types of process components are used in foam production: pumps, flanges, liquid valves, gas pressure relief devices, sampling connections, and open-ended lines. As with MC production, the methodologies outlined in the document, "Protocols for Generating Unit-Specific Emission Estimates for Equipment Leaks of VOC and VHAP," can be used to estimate emissions from the production process equipment leaks.[7] An example of one of the simpler methods is presented in Appendix A. An emission factor for uncontrolled MC equipment leaks based on Section 114 questionnaire responses in 1985 is presented in Table 20.[6]

Storage tank emissions can be derived by using EPA Publication No. AP-42 factors with site-specific information.[8] An example calculation is presented in Appendix A. Accidental spills and resulting emissions are considered to be minimal. An estimated storage tank emission factor derived for uncontrolled storage tanks (including fixed-roof tanks and pressurized tanks) using average storage tank data from Section 114 questionnaire responses in 1985 is presented in Table 20.[6] Facilities that have pressurized tanks were assumed to have no emissions.

An aggregate emission factor for the entire production process is also presented in Table 20,[6] and is based on the assumption that all the MC consumed during the process is emitted to the air at some point in the process.

Emissions Control--

Potential control techniques to reduce MC emissions from polyurethane flexible foam production processes, and their estimated control efficiencies are presented in Table 21.[3]

TABLE 20. UNCONTROLLED EMISSION FACTORS FOR POLYURETHANE FOAM PRODUCTION

Emission Source	Emission Factor g/kg (lb/ton) MC Consumed
Process vents (foam tunnel, curing area)	980 (1960)
Equipment leak emissions	17 (34)
Storage tank emission	3 (6)
Entire Process	1000 (2000)

Source: Reference 6.

TABLE 21. CONTROL TECHNIQUES AND EFFICIENCIES USED TO ESTIMATE CONTROLLED EMISSIONS FROM POLYURETHANE FLEXIBLE FOAM PRODUCTION

Emission Source	Control Technique	Percent Reduction in Methylene Chloride Emissions
Process Vents:		
Foam Tunnel	Foam Tunnel Enclosure/ Carbon Adsorption	95[a]
Curing Area	None	0
Storage Tanks	Condenser	85
Equipment Leaks		60-100[b]
Pump Seals		
Packed	Monthly LDAR	60.8
Mechanical	Monthly LDAR	60.8
Valves		
Gas	Monthly LDAR	73
Liquid	Monthly LDAR	59
Pressure Relief Devices		
Gas	Rupture Disk	100
Sample Connections	Closed Purge Sampling	100
Open-Ended Lines	Caps on Open Ends	100

Source: Reference 3.

[a] Assumes 100 percent capture efficiency within foam tunnel.

[b] Depends on control technique for given equipment component.

LDAR = Leak Detection and Repair

As previously discussed, not all production facilities have been located and contacted recently to discern whether controls are more stringent now than in 1985. It is known, however, that MC use within this industry has increased by 20 percent since 1984 as it has increasingly been used as a substitute for CFC-11 in the production process.

REFERENCES FOR POLYURETHANE FOAM INDUSTRY

1. Occupational Safety and Health Administration Proposal for New Methylene Chloride Standard, 56 FR 57045-57046, 57056-57057, November 7, 1991.

2. "Chemical Profile--Methylene Chloride," Chemical Marketing Reporter, 241(9):42, March 2, 1992.

3. "Methylene Chloride Emissions from Flexible Slabstock Polyurethane Foam Facilities," Memorandum from R. L. Ajax and S. R. Wyatt, U.S. Environmental Protection Agency, Radian Corporation, to J. Farmer, Standards Development Branch, U.S. Environmental Protection Agency, Research Triangle Park, NC, April 21, 1986.

4. The Flexible Polyurethane Foam Handbook, Dow Chemical, Urethanes Unlimited, 1985.

5. "Status of Control of Process Vent Emissions," Telephone communication from Joanne O'Loughlin, Radian Corporation, Research Triangle Park, NC, with H. Stone, General Foam Corporation, West Hazelton, PA, April 20, 1992.

6. "Crosswalk/Air Toxic Emission Factor Data Base Management System (XATEF), Version 1.2," Diskette, U.S. Environmental Protection Agency, Research Triangle Park, NC, 1991.

7. Protocols for Generating Unit-Specific Emission Estimates for Equipment Leaks of VOC and HAP, EPA-450/3-88-010. U.S. Environmental Protection Agency, Research Triangle Park, NC, October 1988.

8. "4.3 Storage of Organic Liquids," Compilation of Air Pollutant Emission Factors, Volume I: Stationary Point and Area Sources, Fourth Edition, AP-42, Chapter 12, Supplement E, U.S. Environmental Protection Agency, Research Triangle Park, NC, September 1985.

PHARMACEUTICAL MANUFACTURING

The pharmaceutical manufacturing industry used approximately 11 percent of the total MC consumed in the United States in 1991.[1] Methylene chloride is used in pharmaceutical manufacturing as a general solvent, as an extraction solvent, and in tablet coatings.[2,3] Although most of the MC is used in pill coatings, it is also used in the manufacture of antibiotics, vitamins, contraceptives, and drugs used to control hypertension and diabetes. Many facilities have been able to reduce or eliminate MC from tablet coating operations and substitute water or other safer chemicals. Previous EPA studies indicate that there are over 800 pharmaceutical plants in the United States and its territories,[2] but MC is used in only 76 of these facilities.[4] Table 22 contains a partial list of pharmaceutical manufacturing facilities that use MC. It should be noted, however, that the information is based on a 1985 survey.[3] A survey of 1989 TRIS data revealed 74 pharmaceutical facilities using MC. Refer to Appendix D for a list of these facilities. Ten of the facilities on the TRIS list are found in Table 22.

Methylene chloride is useful in pharmaceutical extractions for a number of reasons. Because of its low boiling point (40°C), it can be used to extract heat-sensitive materials. It is useful in extractions from water because it is immiscible with water, tends not to emulsify, and has a high specific gravity (1.33 at 20°C).[5,6] Some pharmaceutical companies use MC as an extraction solvent because their product is very soluble in MC.[5]

The main reason that MC is used to spray coating on tablets is that it is highly volatile and so evaporates readily. Methylene chloride is also useful if the tablet is sensitive to water and/or heat.[7] Methylene chloride forms a binary azeotrope with water (98.5% by weight at 38°C) and can be used as a drying medium.[5,6] This azeotropic property can be important for coating crystals with another water-soluble solid. A typical coating solution does not consist of just MC, but is also composed of lesser percentages of alcohol and solids. Methylene chloride is completely miscible with other chlorinated solvents, diethyl ether, and ethanol, so the above mixture can be varied to give the best coating.[5,7] Some companies use MC

TABLE 22. PARTIAL LIST OF PHARMACEUTICAL MANUFACTURING FACILITIES THAT USE METHYLENE CHLORIDE

Facility	Location	Annual Capacity kg/yr (lb/yr)
Abbott Labs[a]	Barceloneta, PR North Chicago, IL	[b]
Aldrich Chemical	Milwaukee, WI	[b]
Beecham, Inc.[a]	Piscataway, NJ	[b]
Biocraft Labs[a]	Waldwick, NJ	2,300,000 (5,000,000)
Bristol-Myers[a]	Syracuse, NY	[b]
Burroughs Wellcome[a]	Greenville, NC	[b]
Chemical Dynamics	S. Plainfield, NJ	270 (600)
Chemical Service	West Chester, PA	45 (100)
Ciba Geigy[a]	Ardsley, NY Summit, NJ	[b] [b]
Deepwater, Inc.	Compton, CA	45 (100)
Eli Lilly & Co.[a]	Indianapolis, IN	[b]
Frank Enterprises	Columbus, OH	[b]
Ganes Chemicals, Inc.	Pennsville, NJ	[b]
Genzyme	Boston, MA	[b]
Henkel of America	Kankakee, IL	[b]
Nepera, Inc.	Harriman, NY	[b]
Pfizer[a]	Groton, CT Terre Haute, IN	[b]
Squibb Corp.[a]	Kenly, NC	10,000 (22,000)
Upjohn[a] (Fine Chemical Div)	Arecibo, PR Kalamazoo, MI	[b]
Warner Lambert	Holland, MI	[b]
William H. Rorer	Fort Washington, PA	[b]

Source: Reference 3.

[a]Also found in TRIS data.

[b]Capacity not available.

NOTE: These operating plants and locations were current as of November 1985. The reader should verify the existence of particular facilities by consulting current listings and/or the plants themselves. The level of MC emissions from any given facility is a function of variables such as capacity, throughput, and control measures, and should be determined through direct contact with plant personnel.

because it dissolves cellulose acetate, which can be used for semi-permeable membranes.[5] Another reason for its prevalent use is that it is easy to control emissions through activated carbon absorption, and the MC retained can be reused without further purification.[7]

Even though MC has properties conducive to manufacturing pharmaceuticals, there has been an effort to reduce the amount used by the industry because of possible negative health effects. Solvent substitutes such as methanol and ethanol have been considered. However, these substances are not always suitable because of flammability and health concerns. Petroleum distillates and aqueous solutions are being substituted for MC at some facilities.[4,8] Pharmaceutical manufacturing operations are very diverse with some plants using chemical synthesis to produce active ingredients (fermentation and natural extraction are alternative means) and some plants formulating final products (capsules, tablets, etc.). Facilities may conduct one or more of the above operations.

Process Descriptions

Synthetic Organic Pharmaceutical Chemical Process--

Pharmaceuticals typically are manufactured in a series of batch operations. The four successive stages of pharmaceutical production include: chemical reaction, product separation, purification, and drying. Figure 7 shows a typical batch synthesis operation.[2] In the chemical reaction stage, raw material solids and solvents such as MC are mixed in a reactor vessel in which the chemical reaction is carried out, sometimes under elevated temperature and pressure. The stainless steel or glass-lined carbon steel reactor vessel is either an open tank or an enclosed vessel, both equipped with an agitator. Peripheral equipment such as condensers, a refrigeration unit, or a vacuum system can be added to allow the reaction to take place at very high or low temperatures and/or pressures. Some reactors are equipped with a condenser for recirculation of the solvent.

After completion of the chemical reaction, the pharmaceutical products are separated during the product separation stage. The effluent is pumped from the reactor to a holding tank where the reaction products are washed to remove unreacted raw materials and

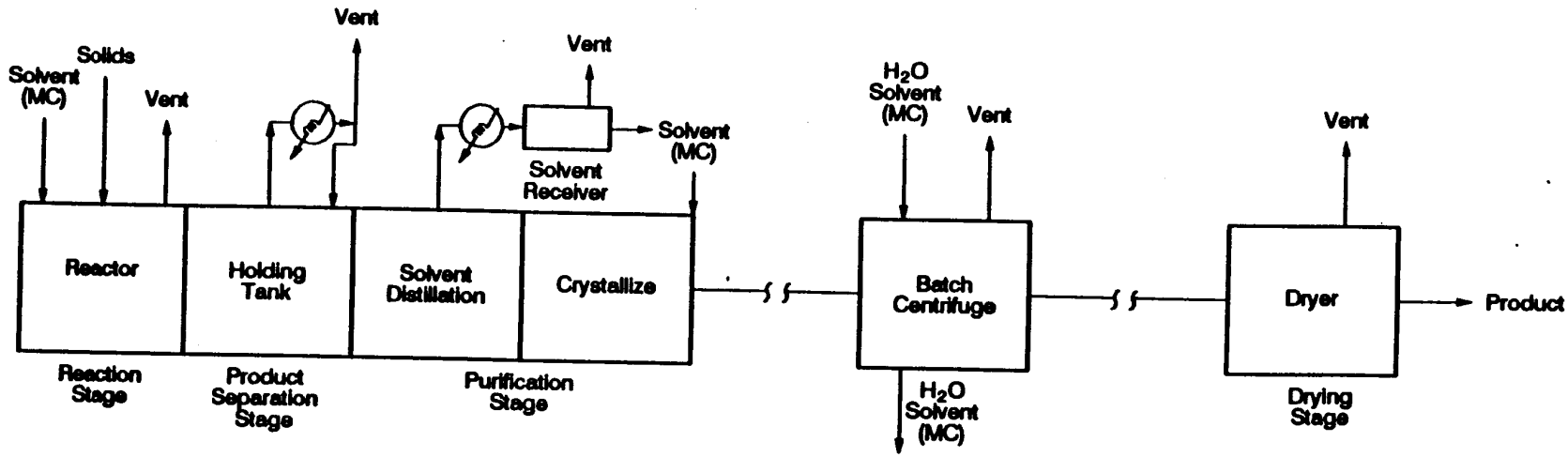

Source: Reference 2

Figure 7. Typical synthetic organic pharmaceutical chemical process.

6227169R

byproducts. The washed reaction products are then piped to various separation process tanks. Product separation often utilizes an extraction process in which a solvent (such as MC) preferentially dissolves one of the reaction products.

Distillation, crystallization, and filtration are among the purification techniques used after product separation or extraction. Following product separation, the crude extracted product is purified by crystallization of the desired compound from a supersaturated solution. A filter press is usually used to separate the concentrate from the solvent. The purified product and remaining solvent are then separated in a centrifuge. The cake may be further washed with water or another solvent to remove impurities before drying.

After the completion of the purification processes, products are moved to dryers, such as tray, rotary, or fluidized bed dryers, which use hot-air circulation or are operated under a vacuum to remove the remaining solvents or water from the product.[4]

Tablet Coating Process--

Tablets are coated in rotating open-ended pans that range from 90 to 150 cm (36 to 60 inches) in diameter. The coating is sprayed on the tablets in the pan while warm air (30°C) flows across the pan at a typical rate of 28 cubic meters per minute (1000 cubic feet per minute). The coating solution is made up of MC and alcohol (about 70/30) but water alone can be used.[8] The air evaporates the solvents, leaving coated tablets. Spray coating and drying takes 2 to 3 hours per batch. A large plant might have 20 pans, whereas a small plant might have only two. Any number of pans can be in use at any given time. The pans are usually cleaned after each batch, even if multiple batches of the same material are made.

Pharmaceutical products may also be coated by the Wurster process. In this process, the tablets or pellets are suspended in a fluidized bed while the spray solution is applied using a stream of heated nitrogen.[7,8] Methylene chloride is used as a solvent along with alcohol (70/30) to dissolve the solids used to coat the tablets. This solution is then sprayed on the cores, the solvents evaporated off, and the vapors condensed and collected in a tank for reuse in the next

batch.[8] This method is used most often for coating pellets (smaller particles that are later encapsulated), whereas coating pans are used most often for coating tablets (standard dosages). A good example of pellet coating would be over-the-counter 12-hour cold capsules.

Most tablets are coated with sugar, methyl cellulose, or ethyl cellulose. Cellulose coatings may use either a water or an organic solvent such as MC. Chloroform can be used in place of MC. The use of water as a solvent or solvent component reduces VOC emissions, but more time and heat are required to evaporate the water than for an organic medium. Therefore, this is a production consideration. Also, products that are sensitive to water and/or heat may preclude the use of aqueous coatings. The use of heat or vacuum can expedite evaporation, but this rapid evaporation can peel or roughen the coating.

According to one manufacturer, the rotating pan units can process batches between 400 and 800 kg (900 and 1,700 lbs), with a total yearly throughout between 192,000 and 363,000 kg (423,000 lbs and 799,000 lbs), of which 71,140 kg to 134,380 kg (156,510 lbs to 295,630 lbs) is product.[8] Batch sizes using the Wurster process may vary, with a minimum of 860 kg/batch (1,891 lbs/batch) to a maximum of 3,787 kg/batch (8,331 lbs/batch). In a year's time, a total of 112,820 kg (248,203 lbs) of material were processed through the Wurster column, of which 12,072 kg (26,558 lbs) was product.[8]

Emission Sources

Pharmaceutical Chemical Synthesis--

Methylene chloride is released during storage, transfer, reaction, separation, purification, and drying processes of pharmaceutical chemical synthesis.[4] Storage emissions result from displacement of air containing the solvent during tank charging. Chemical transfer operations, such as manually pouring solvent drum contents, is a source of emissions. Reactor emissions result from the displacement of air containing MC during reactor charging, solvent evaporation during the reaction cycle, venting of uncondensed MC from the overhead condenser during refluxing, purging of vaporized MC following a solvent wash, and opening of reactors during the reaction

cycle to take quality control samples. Distillation condensers can emit MC as uncondensed solvent.

During crystallization, emissions can result from the venting of vaporized solvent if the crystallization is being done by solvent evaporation. If crystallization is accomplished by cooling of the solution, there are few emissions. Dryers are potentially large emission sources; emission rates vary during drying cycles, and with the type of dryer being used. Emissions from air dryers are normally greater than those from vacuum dryers mainly because air dryer emissions are more dilute and difficult to control.[2,4]

Below is a ranking, in order of decreasing emissions, that illustrates relative expected total VOC emissions from uncontrolled pharmaceutical chemical synthesis process sources.[2]

- Dryers
- Reactors
- Distillation systems
- Storage and transfer systems
- Filters
- Extractors
- Centrifuges
- Crystallizers

For most pharmaceutical facilities, the first four listed process sources will account for the great majority of total plant MC emissions.[2] In addition to the eight sources listed above, fugitive emissions result from leaks in equipment components. The list differs if controlled emissions are considered because emissions from reactors and distillation systems can often be very efficiently condensed.

Tablet Coating--

Most emissions from tablet coating are process vent exhaust emissions from pan tablet coating. Although the exhaust emissions are often very dilute, they can be controlled with activated carbon adsorption,[7] which enables the manufacturing facility to recover the MC

solvent. Emissions from tablet coating storage and transfer operations, as well as fugitive emissions, are similar to those from pharmaceutical chemical synthesis.

The Wurster process is operated as a totally closed system with a solvent recovery system based on a refrigerated condenser maintained at about 25°C, so emissions from this process are limited to approximately 2 percent.[8]

Emissions Data and Controls

Emission Factors--

Surveys of drug manufacturers in 1975, 1982, and 1985 estimated the final disposition of total MC usage. The responding firms were estimated to represent approximately one-half of the production of ethical (prescription) domestic pharmaceuticals in those years. The amount emitted into the air (instead of being incinerated, disposed of into the sewer, etc.) varied from 43 to 67 percent of total MC consumed.[9-12] Table 23 illustrates the disposition of MC for all three years.

Some emission factors were developed from 1985 process data obtained from the Ciba-Geigy facility in Summit, New Jersey. This information is summarized in Table 24.[8] Emission factors for tablet coating are shown both prior to control and after control by carbon adsorption. No other current emissions data from pharmaceutical manufacturing facilities were located.

As discussed previously in Section 4 for MC producers, site-specific emissions estimates can be developed using the AP-42 methodologies for storage tanks, the "Protocols" methodologies for equipment leaks, and the wastewater CTC document methodology for wastewater. Example calculations are given in Appendix A.

Applicable Controls for Pharmaceutical Chemical Synthesis--

Applicable controls for the vented emissions mentioned earlier, except storage and transfer, are: condensers, scrubbers, and carbon adsorbers.[2] Incinerators are not currently widely used to control

TABLE 23. METHYLENE CHLORIDE PURCHASES AND ULTIMATE DISPOSITION BY PHARMACEUTICAL MANUFACTURERS

Year of Data	Annual Purchase (metric tons)	Ultimate Disposition (percent)					
		Air Emissions	Sewer	Incineration	Solid Waste or Contract Haul	Other Disposal	Product
1975	10,000[a]	53	5	20	22	--	--
1982	11,375[b]	43	5	38	11	3	--
1985	1,539[c]	67	8	4	10	7	3

Source: References 9-12.

[a] Data represent 26 pharmaceutical manufacturers, which account for approximately 53% of 1975 domestic sales of ethical pharmaceuticals.

[b] Data represent 17 pharmaceutical manufacturers, which account for approximately 50% of 1982 domestic sales of ethical pharmaceuticals.

[c] Data represent 13 pharmaceutical manufacturers. Information concerning percentage of domestic sales (as in 1975 and 1982 data) not available.

TABLE 24. METHYLENE CHLORIDE EMISSION FACTORS FOR PHARMACEUTICAL MANUFACTURING

Industrial Process	Emission Source	Emission Factor	Control Status
Pan tablet coating	Process Vents	0.053 kg MC/kg product 0.001 kg MC/kg product	Uncontrolled Controlled (dual carbon bed adsorber)
Blender	Process Vent	0.003 kg MC/kg active ingredient processed	Uncontrolled
Coating solution holding tank	Process Vent	0.01 kg MC/kg coating solution processed	Uncontrolled
Coating solution mixer	Process Vent	0.0001 kg MC/kg coating solution processed	Uncontrolled

Source: Reference 8.

NOTE: Emission data are for one facility only and do not represent average emissions for all such sources, or total emissions for all sources.

vapor phase organic emissions from synthesized drug production facilities.[2] Part of the lack of use may be due to the variability of waste gases that would be ducted to an incinerator and the batch nature of the processes. Fluctuating flows and pollutant concentrations may hamper safe and efficient operation. Therefore, incinerators would most likely find application where relatively stable waste gas flows can be established. Stability may be enhanced by ducting emissions from several sources to a common control device. It should be noted that incineration of MC results in hydrogen chloride (HCl), which is also an air pollutant.

Another potential disadvantage of using incinerators is that heat recovery is likely to be uneconomical because at pharmaceutical plants incinerators will be relatively small and the potential energy recovery correspondingly small, especially when viewed in light of the costs for installing heat recovery equipment.[2] In addition, the incinerator would generally run less than 24 hours a day. In this case, heat recovery would be intermittent, thus decreasing its utility.

Storage emissions can be controlled by storing MC in pressure tanks or by venting storage emissions to a control device such as a condenser, scrubber, carbon adsorber, or combustion device. Floating roofs would be feasible controls for large, vertical storage tanks.[2] These controls are the same as those applicable to emissions from MC production. Transfer may be controlled by vapor balancing, where MC vapors are returned to the storage tanks; or transfer emissions may be vented to a control device.

Control of equipment leak emissions may be accomplished through a regular inspection and maintenance program, as well as by equipment modification. See Section 4 for more information regarding equipment leaks.

Applicable Controls for Tablet Coating--

Figure 8 is a schematic of the pan tablet coating process solvent recovery system.[8] In this control method, the MC-contaminated air from the dryer is passed through a bed of activated carbon (with control efficiencies of 98+ percent). When the carbon bed becomes loaded with

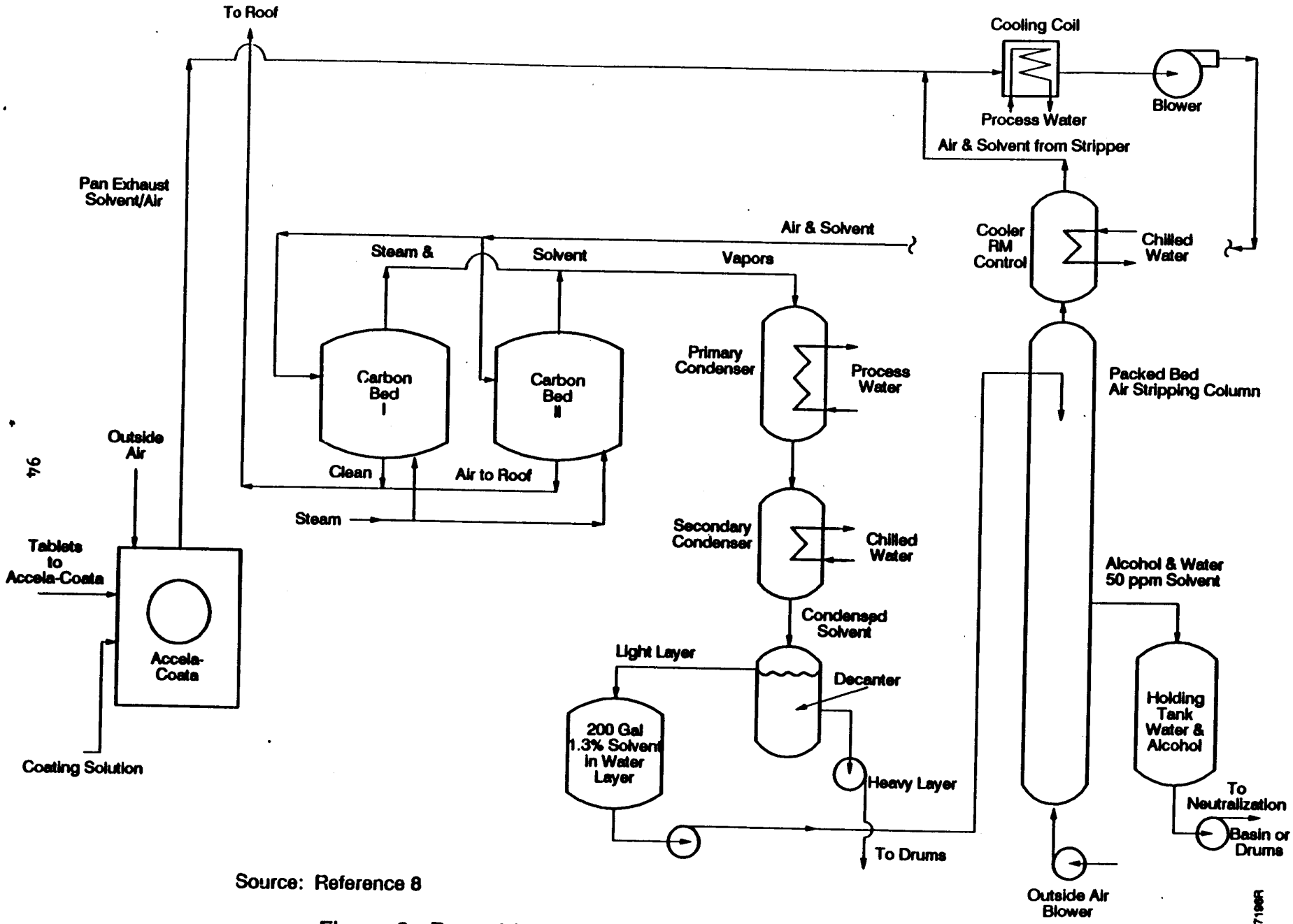

Source: Reference 8

Figure 8. Pan tablet coating process solvent recovery system.

organic compounds, it is stripped with low-pressure steam. Because MC is insoluble in water, it is easy to separate from the steam condensate for reuse. Any ethanol that is captured is miscible with the steam condensate and is impractical to salvage. The condensate, which contains 1-2 percent alcohol, is usually discarded to a sewer. In a large pharmaceutical plant, this wastewater stream is processed in the plant wastewater treatment system.[7]

Figure 9 describes the Wurster process solvent recovery system.[8] With this system, about 98 percent of the solvents are recovered and reused as is. Because there is no contact with water, no solvents find their way to the sewer system.[8] The remaining 2 percent of solvents are presumably emitted into the air.

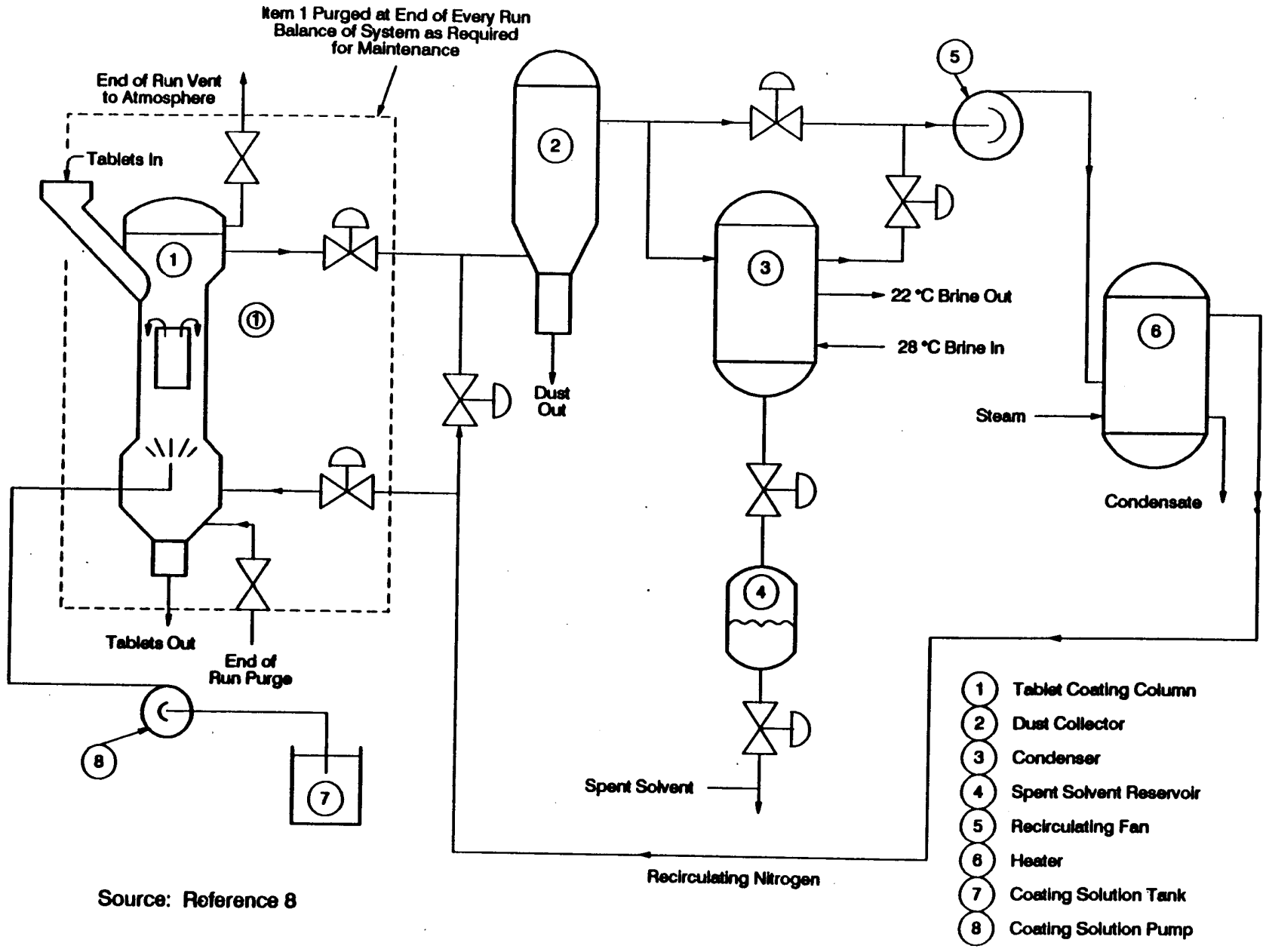

Source: Reference 8

Figure 9. Wurster process solvent recovery system.

62271197R

REFERENCES FOR PHARMACEUTICAL MANUFACTURING

1. "Chemical Profile--Methylene Chloride," Chemical Marketing Reporter, 241(9):42, March 2, 1992.

2. Control of Volatile Organic Emissions from Manufacture of Synthesized Pharmaceutical Products, OAQPS Guideline Series, EPA-450/2-78-029, U.S. Environmental Protection Agency, Research Triangle Park, NC, December 1978.

3. "Telephone Survey of Pharmaceutical Manufacturing Industry," Memorandum from R. Nash, Radian Corporation, Research Triangle Park, NC, to D. Beck, U.S. Environmental Protection Agency, Research Triangle Park, NC, November 6, 1985.

4. Occupational Safety and Health Administration Proposal for New Methylene Chloride Standard, 56 FR 57048, 57060, November 7, 1991.

5. "Telephone and Literature Survey of Pharmaceutical Production," Memorandum from N. Cole, Radian Corporation, Research Triangle Park, NC, to D. Beck, U.S. Environmental Protection Agency, Research Triangle Park, NC, February 12, 1986.

6. Kirk-Othmer Encyclopedia of Chemical Technology, M. Grayson, ed., Volume 5, pp. 380, 686, 692. John Wiley & Sons, New York, NY. 1979.

7. Volatile Organic Compound Emission Controls for Tablet Coatings at Pharmaceutical Plants, NTIS No. PB84-182922, U.S. Environmental Protection Agency, Research Triangle Park, NC, January 1984.

8. Written communication from L. DellaVecchia, Ciba-Geigy Facility, Summit, NJ, to Radian Corporation, Research Triangle Park, NC, February 7, 1986.

9. Survey of Methylene Chloride Emission Sources, EPA-450/3-85-015. U.S. Environmental Protection Agency, Research Triangle Park, NC, June 1985.

10. Written communication from T. White, Pharmaceutical Manufacturers Association, Research Triangle Park, NC, to D. Beck, U.S. Environmental Protection Agency, Research Triangle Park, NC, June 8, 1984.

11. Written communication from T. White, Pharmaceutical Manufacturers Association, Research Triangle Park, NC, to D. Beck, U.S. Environmental Protection Agency, Research Triangle Park, NC, August 18, 1986.

12. "4.3 Storage of Organic Liquids," Compilation of Air Pollutant Emission Factors: Volume 1, Stationary Point and Area Sources, Fourth Edition, AP-42, Chapter 12, Supplement E, U.S. Environmental Protection Agency, Research Triangle Park, NC, September 1985.

SOLVENT CLEANING AND PHOTORESIST STRIPPING

An estimated 11 percent (16,420 Mg) of total 1991 United States MC consumption was used for metal cleaning (also called degreasing) in a variety of manufacturing processes, and 3 percent (3,400 Mg) was used for photoresist stripping in printed circuit board manufacture in the electronics industry.[1,2]

Solvent cleaning is a process used to remove water-insoluble soils from metal, plastic, fiberglass, printed circuit boards, and other surfaces. Water-insoluble soils include grease, oil, waxes, carbon deposits, fluxes, tars, metal chips, mold-release agents, and oxidation layers. Solvent cleaning is used by a variety of industries that employ cleaning processes as part of their manufacturing process or prior to painting, plating, inspection, repair, assembly, heat treatment, and machining. Typical industries that use solvent cleaning processes include furniture and fixtures, fabricated metal production, electric and electronic equipment, transportation equipment, plumbing fixtures, aerospace manufacturing, miscellaneous manufacturing, primary metals, automobile and electric tool repair shops, and railroad, bus, aircraft, and truck maintenance facilities.[3] Because of the large number of solvent cleaning operations existing within many different industries, information on the location of the individual solvent cleaning equipment is difficult to obtain. The following sections discuss the solvent cleaning industry, cleaning process descriptions, and emissions.

Process Descriptions

Solvent cleaning processes are typically performed by two basic types of solvent cleaning equipment: batch cleaners and in-line cleaners (also called continuous cleaners). Both cleaners exist in designs for use with solvent at room temperature (cold cleaners) or solvent vapor (vapor cleaners). Methylene chloride solvent cleaning processes for each solvent cleaner [e.g., batch vapor cleaners, in-line cleaners (cold and vapor), and batch cold cleaners] are discussed in the following sections.

Batch Vapor Cleaner Process Description--

Batch vapor cleaners heat solvent to a boiling point, creating a solvent vapor zone into which items to be cleaned are lowered. The cleaning process involves the solvent vapor condensing on the item and stripping soils away. Cleaning can also be supplemented or replaced by immersing items into the liquid solvent during the cleaning cycle. Batch vapor cleaners include open-top vapor cleaners (OTVC), and non-OTVC batch cleaners developed with design variations to meet particular workload characteristics and cleaning demands for particular applications.[3]

Open-top vapor cleaner and non-OTVC batch cleaners are designed to generate and contain solvent vapor. The basic OTVC batch cleaner is illustrated in Figure 10. It is equipped with a heating system or pump to boil liquid solvent. As the solvent boils, dense solvent vapors rise to the level of the primary condensing coils. The primary condensing coils circulate coolant (e.g., water, refrigerant) through the coils, providing continuous condensation of the rising solvent vapors and creating a controlled vapor zone that prevents most vapor from escaping the tank. Solvent vapor and moisture in the air collect in a condensate trough along the sides of the OTVC below the primary condensing coils. This condensate goes into a water separator. The water separator is a container that separates the water from the liquid solvent, returning solvent to the cleaner and routing water for use in another process within the facility/plant or to disposal to a publicly owned treatment works (POTW) system. Some batch OTVC cleaners may also use a canister of desiccant to replace or aid the water separator in its reduction of water contamination. The OTVC walls also extend above the top of the vapor zone. This area is called the freeboard. A freeboard reduces air currents and disturbance of the vapor zone boundary.[3]

Design variations of OTVC batch cleaners are numerous, and depend on the particular characteristics and demands of the workload. Examples of design variations incorporated in OTVC batch cleaners include stills, lip or slot exhausts, covers, and multiple-chamber cleaners. Stills are used to extract soils from the solvent sump and return clean solvent to the machine, decreasing the need to replace the cleaning solvent because of impurities. Lip or slot exhausts are designed to capture solvent vapors escaping from the OTVC and carry them away from the work area, and are incorporated to reduce occupational exposure. Covers, in varying designs, are used to limit solvent losses and contamination during downtime or idling time. Multiple-chamber design variations can include various solvent-cleaning methods (e.g., vapor, immersion, spraying).[3]

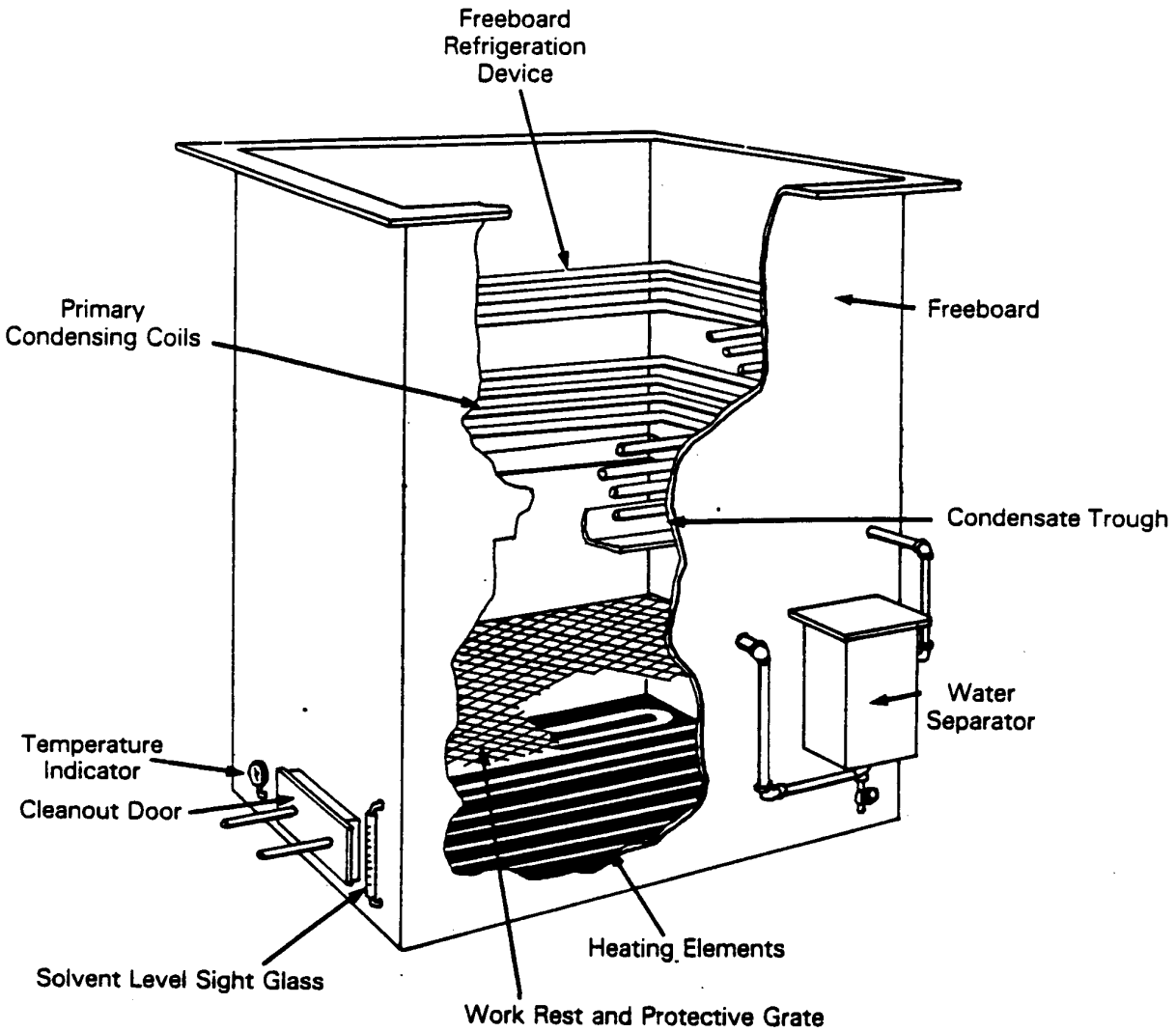

Source: Reference 3

1682390R

Figure 10. Open top vapor cleaner.

There are some batch vapor cleaners that are not OTVCs. These include cleaners into which a batch of parts is loaded, and then moved through the cleaner on a conveyor (called a conveyorized batch cleaner) and batch cleaners that are more enclosed than OTVCs. These batch vapor cleaners tend to be larger than the OTVC batch cleaners and employ similar cleaning methods (e.g., condensing vapor, immersion, spray). These cleaners are a hybrid of an OTVC and continuous cleaner. Examples include cross-rod, vibra, ferris wheel, and carousel cleaners. An example of a cross-rod, non-OTVC batch vapor cleaner is illustrated in Figure 11.[3]

The cleaning process for OTVC and non-OTVC batch cleaners entails solvent vapors condensing on the cooler workload entering the vapor zone until the workload temperature approaches the temperature of the vapor. The condensing solvent dissolves and flushes soils from the workload until condensation ceases and the vapor-phase cleaning process is complete. As discussed previously, the vapor cleaning process can also include immersion of the item to be cleaned into the hot, liquid solvent.

Immersion batch vapor cleaning processes often include the use of ultrasonics. Ultrasonics uses high-frequency sound waves that produce pressure waves in the liquid solvent. The areas of low pressure within the solvent form small vapor pockets that collapse as the pressure in the zone cycles to high pressure. The creation and collapse of these vapor pockets aids in cleaning by providing a scrubbing action.

Because of their higher boiling points, impurities (e.g., grease, soil, wax, etc.) from the cleaning process minimally contaminate the solvent vapors. Solvent can be used in vapor cleaning for a longer time than in cold cleaning because of the affinity of the solvent vapor to remain relatively pure as compared to immersion cold cleaner solvent. Another variation in the cleaning process is the use of spray solvent below the vapor line. The pressure of the spray and/or the potential for solvent condensation on the workload aids in the physical cleaning of the workload.

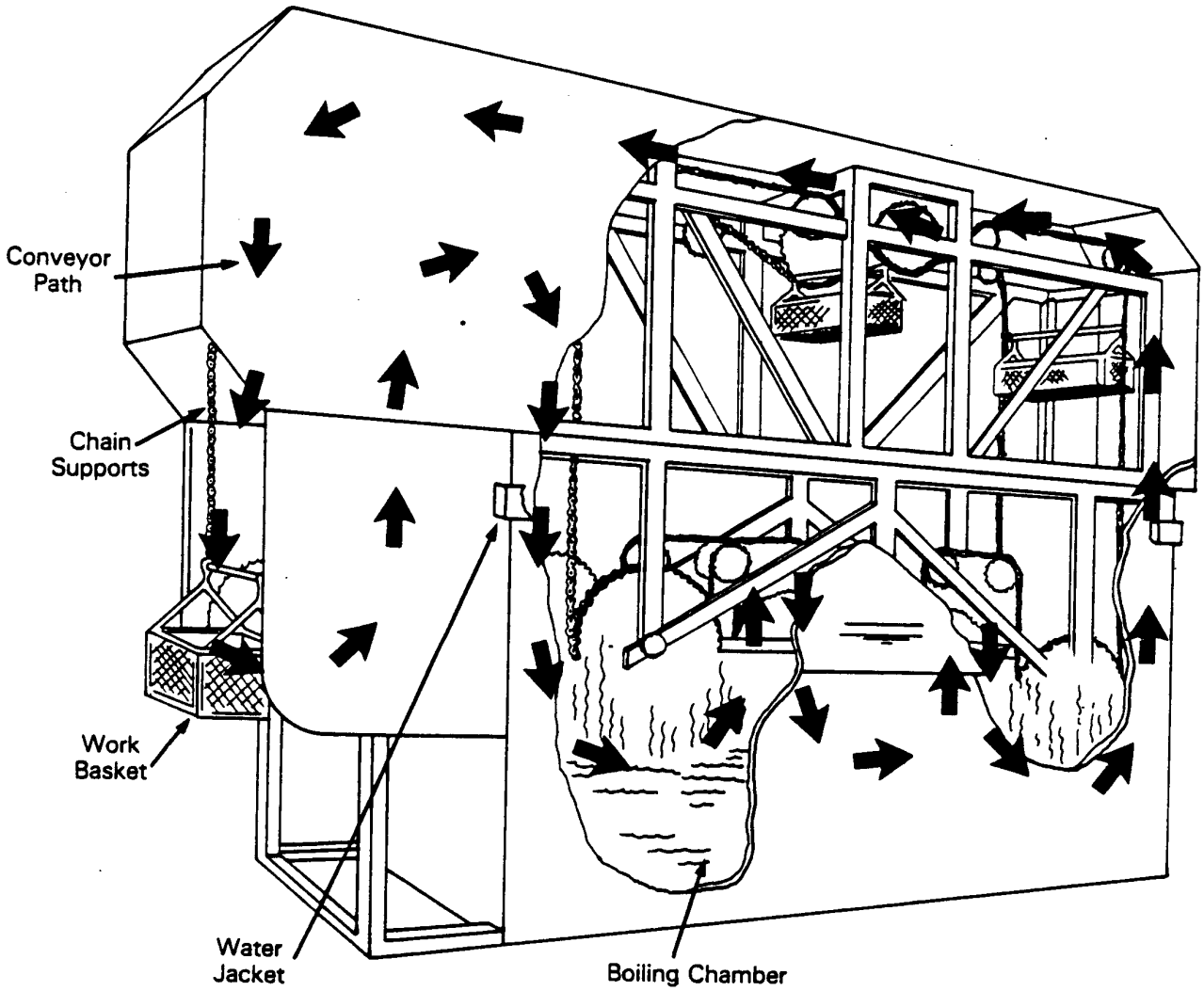

Source: Reference 3

1682393R

Figure 11. Cross-rod cleaner.

In-Line (Vapor and Nonvapor) Cleaner Process Description--

In-line cleaners (also known as continuous cleaners) are cleaners that use automated loading on a continuous basis. The same cleaning techniques are employed in in-line vapor cleaners as with batch vapor cleaners. In-line nonvapor cleaning involves the use of solvent at room temperature, where immersion and spray cleaning techniques can be employed. Most of these cleaners, however, operate as vapor cleaners.[3]

In-line cleaners are usually enclosed, except at the inlet and exit openings where the parts and conveyance pass. They also are typically employed in industries that demand a larger-scale cleaning operation. Design variations within these cleaners are determined by the workload and production rate required. In-line cleaners include monorail, belt, strip, printed circuit board processing equipment (i.e., photoresist strippers, flux cleaners, and developers), and modified cross-rod non-OTVC batch cleaners with both an entry and exit port. An example of a monorail in-line cleaner is illustrated in Figure 12.[3]

Photoresist stripping processes involve using MC to remove any unwanted resist from printed circuit boards. In 1989, 68 percent of MC reported for use in the electronics industry was used in photoresist stripping.[3] Assuming this percentage remained the same for 1991, an estimated 3,400 Mg would have been consumed for use in photoresist operations in 1991.[1,2] A diagram of an in-line photoresist stripping machine is illustrated in Figure 13.[3]

Batch Cold Cleaner Process Description--

Cold cleaners are usually used in small cleaning solvent maintenance demand situations. The solvent cold cleaning process involves the use of the solvent at room temperature. Cleaning is accomplished by spraying, flushing, wipe cleaning, agitating, or immersing of item to be cleaned with the solvent.

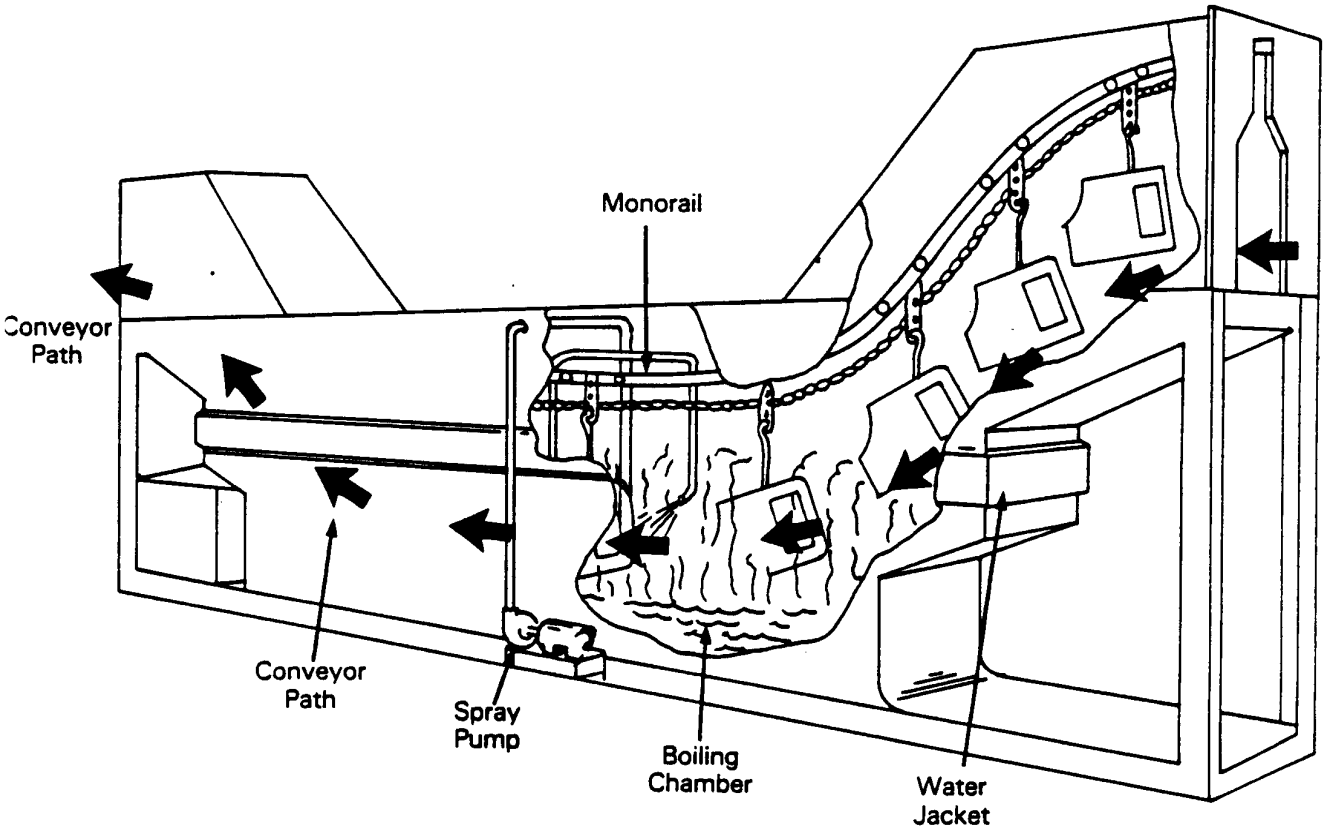

Source: Reference 3

1682394R

Figure 12. Monorail in-line cleaner.

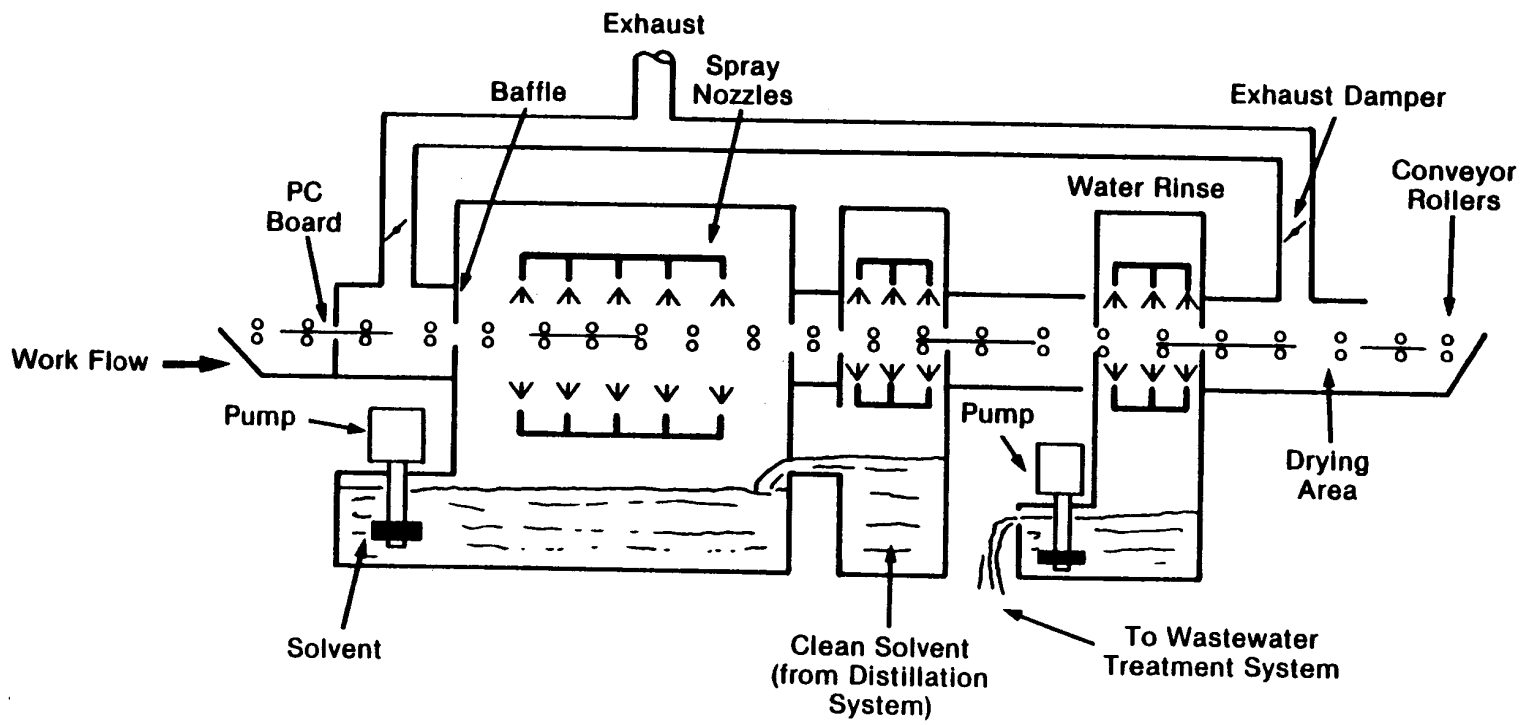

Source: Reference 3

Figure 13. Schematic diagram of an in-line photoresist stripping machine.

0890744R

The only known machine specifically manufactured for cold cleaning purposes (except for non-vapor in-line cleaners) are carburetor cleaners used in automobile repair operations. Methylene chloride is used in these cleaners to increase the soil dissolving power and reduce the flammability potential of the solvent cleaning blend employed. An example of a carburetor cold cleaner is illustrated in Figure 14.[3]

Emissions Sources

Methylene chloride emissions from organic solvent cleaners are air/solvent vapor interface emissions and workload-related emissions. Air/solvent vapor interface emissions that result during idling conditions (when a machine is turned on and ready to operate) are from solvent vapor diffusion and convection. Workload-related emissions result from the introduction and extraction of items cleaned during the cleaning process and spraying processes (if employed) including emissions that occur by solvent carry-out on the workload. Other solvent emission sources include leaks from cleaners or associated equipment, filling and draining operations, and startup, shutdown, and downtime operations.[3]

Idling Solvent Vapor Emissions--

Air/solvent vapor interface emissions under idling conditions in OTVC batch cleaners result mainly from the diffusion of solvent vapors from the vapor zone to the ambient air. Convection losses occur when the heat of a boiling solvent is translated to the solvent cleaner walls, creating a convective upward flow of solvent vapor to the outside of the cleaner. When air flow is introduced across the air/solvent vapor interface because of draft or lip exhaust, the diffusion rate and convection of solvent vapor to ambient air increases. Figure 15 illustrates batch cleaner idling emission sources.[3]

In-line and non-OTVC batch cleaner idling air/solvent vapor loss mechanisms are the same as for OTVC batch cleaners (e.g., diffusion, convection). Figure 16 illustrates these emission sources for an in-line cleaner. The solvent emissions from in-line and non-OTVC cleaners are expected to be less than from OTVC cleaners because these cleaners are more enclosed and therefore less exposed to drafts and their associated air/solvent vapor emissions.[3]

Cold cleaner air/solvent vapor emissions under idling conditions occur from evaporation and diffusion. The only known, manufactured cold cleaner is a carburetor cleaner that generally uses MC with an overlaying water layer (MC is heavier than water), so minimal solvent is expected to evaporate.[3]

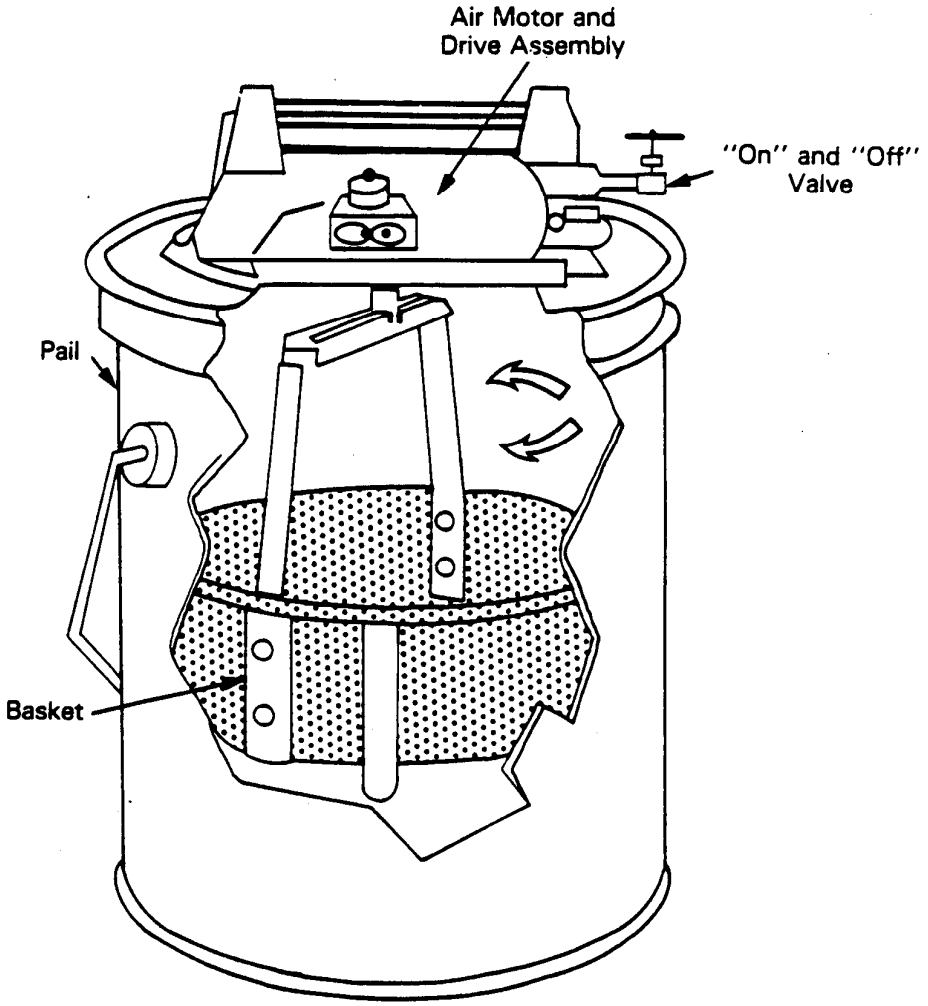

Source: Reference 3

1794039R

Figure 14. Carburetor cleaner.

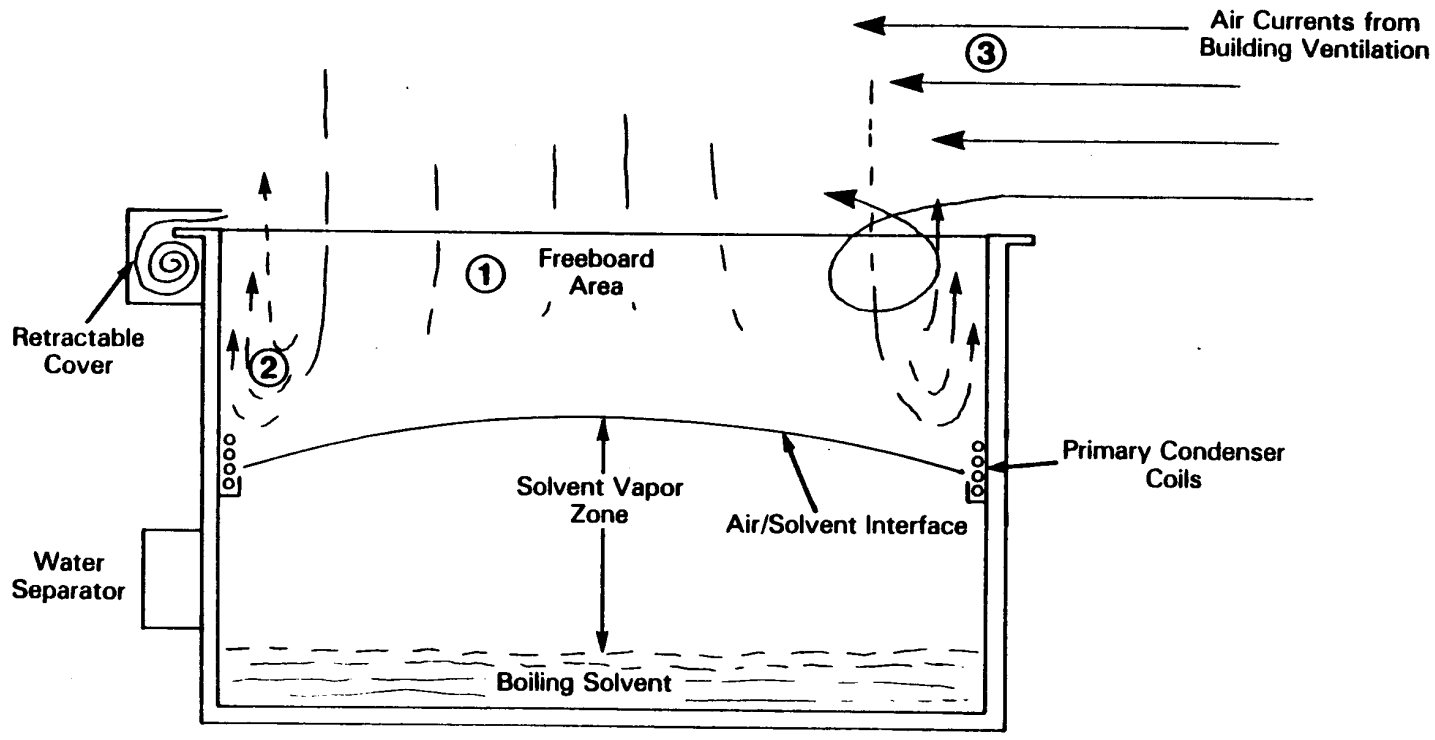

1. Diffusion of Solvent from Air/Solvent Vapor Interface
2. Convection of Solvent Vapor up Warm Tank Walls
3. Diffusion and Convection Emissions Accelerated by Drafts Across Tank Lip (or by Operation of Lip Exhaust Device)

Source: Reference 3

Figure 15. Batch cleaner idling emission sources.

1692415R

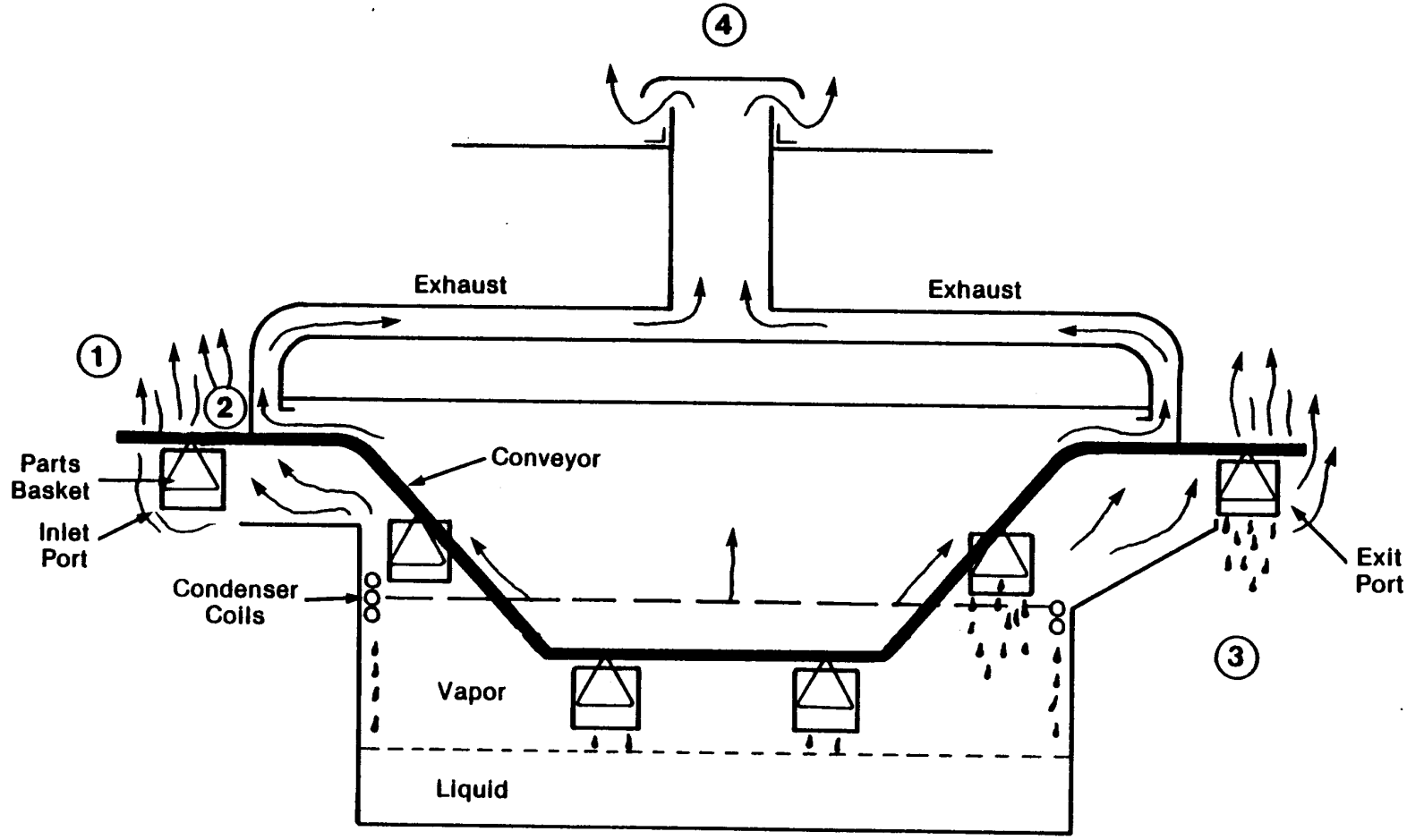

1. Diffusion of solvent from air/solvent vapor interface
2. Vapor up warm tank walls
3. Carry-out of liquid solvent on part and subsequent evaporation
4. Roof vent exhaust

Source: Reference 3

Figure 16. In-line cleaner emission sources.

0290722R

Workload-Related Solvent Vapor Emissions--

Workload-related solvent losses from OTVC batch cleaners are due to the turbulence and vapor line fluctuation that occur at the air/solvent vapor interface when items to be cleaned enter and exit the vapor zone. Turbulence occurs when the items to be cleaned enter the cleaner. Emissions are influenced by the means of conveyance (e.g., manual or automated). Emissions occur from diffusion and convection, and increase with the speed of transfer of the items into and out of the cleaner.[3] An automated hoist system set at a fairly low and even speed can reduce both in-plant and atmospheric emissions (when emissions are vented to the atmosphere) by reducing the disturbance of the air/solvent vapor interface.

Solvent loss from work-load-related conditions also occurs when solvent spray cleaning is employed. Solvent spray cleaning causes turbulence in the air/solvent vapor interface. Pooled liquid solvent and residual solvent film remaining on the items cleaned after removal from a cleaner can also be a source of solvent emissions to the air. These are called carry-out losses. If a longer dwell time (i.e., length of time the part remains in the vapor zone)[4] and parts orientation to facilitate drainage of pooled solvent is incorporated, liquid solvent carry-out emissions can be decreased.[3] Simple working practices, such as increasing the part dwell time and parts orientation considerations may offer significant emission reductions (reducing in-plant and atmospheric emissions).

In-line and non-OTVC batch cleaner workload-related solvent vapor emissions are similar to emissions from OTVC batch cleaners. Workload-related emissions from these cleaners, however, are less on a per-part basis than those from manually operated OTVCs. Turbulence at the air/solvent vapor interface (or the air/solvent interface for in-line cold cleaners) is less for these cleaners than for the manually operated OTVCs because of the automation and associated speed control of parts through the cleaning process. Exhaust systems in these cleaners, unless controlled by a carbon adsorber, can result in significant solvent emissions since air movement by exhaust systems may increase diffusion and convection emissions.[3] It is important to note that although exhaust systems may decrease worker exposure in-plant, there is an associated increase in emissions to the atmosphere.

Workload-related solvent emissions from cold cleaners result from solvent agitation and spraying, and solvent liquid and film carry-out. Efforts to facilitate drainage (i.e., tipping of parts, longer drainage time) decrease solvent carry-out emissions.[3]

Other Emission Sources--

Other solvent emissions sources include storage and handling operations, startup, shutdown, and downtime operations, leaks, wastewater, filling and draining operations, distillation operations, and solvent decomposition. These losses will depend on the cleaning machine integrity and design, and the operating techniques employed. Emissions for storage, leaks, and handling losses from the solvent cleaning industry can be estimated by the same methodology as discussed for the MC production industry in Section 4. Appendix A presents an example of simple calculations for fixed-roof storage tanks and equipment leaks; but as described in Section 4, there are also other methods of emission estimation available for equipment leaks and other storage tank configurations. Particular facilities and processes will require differing factors, and reference to EPA Publication No. AP-42 for storage and the "protocols" document for equipment leaks is suggested.

Emission Controls

Solvent control strategies involve machine design and operating practices to minimize emissions from the sources discussed. Available control techniques (including hardware and operating practices) for batch OTVC, in-line (vapor and nonvapor), and cold cleaner operations are shown in Tables 25, 26, and 27, respectively. The EPA published a control techniques guideline (CTG) document for solvent metal cleaning in 1977, and an alternative control technology document for halogenated solvent cleaners in 1989. Thirty-three States and the District of Columbia adopted the CTG-based RACT for solvent cleaning emission.

The CTG developed two levels of control (A and B). Control System A specified simple control equipment (e.g., covers and implementation of good operating practices), and System B required that there be other control equipment (i.e., freeboard extension, freeboard refrigeration device) installed in addition to the System A controls.[3] Presently, a proposal for a National Emission Standard for Hazardous Air Pollutants (NESHAP) for the control of halogenated solvent emissions from cleaners is being developed, and a regulation and supporting document is scheduled to be finalized in 1994.

TABLE 25. AVAILABLE CONTROL TECHNIQUES FOR OTVC OPERATIONS

Source of Solvent Loss	Available Control Hardware	Operating Practices
Air/Solvent Vapor Interface	• 1.0 freeboard ratio (FBR) (or higher) • Freeboard refrigeration device • Reduced primary condenser temperature • Automated Cover • Enclosed design • Carbon adsorber • Reduced air/solvent vapor interface area	• Place machine where there are no drafts • Close cover during idle periods
Workload	• Automated parts handling at 3.4 meters per minute (11 fpm) or less • Carbon adsorber • Hot vapor recycle/superheated vapor system	• Rack parts so that solvent drains properly • Conduct spraying at a downward angle and within the vapor zone • Keep workload in vapor zone until condensation ceases • Allow parts to dry within machine freeboard area before removal
Fugitive	• Sump cooling system for downtime • Downtime cover • Closed piping for solvent and waste solvent transfers • Leakproof connections; proper materials of construction for machine parts and gaskets	• Routine leak inspection and maintenance • Close cover during downtime

Source: Reference 3.

TABLE 26. AVAILABLE CONTROL TECHNIQUES FOR IN-LINE OPERATIONS

Source of Solvent Loss	Machine Design	Operating Practices
Air/Solvent Vapor Interface[b]	• 1.0 freeboard ratio • Freeboard refrigeration device[a] • Reduced primary condenser temperature[a] • Carbon adsorber • Minimized openings (clearance between parts and edge of machine opening is less than 10 cm or 10% of the width of the opening)	
Workload	• Conveyor speed at 3.4 meters per minute (11 fpm) or less • Carbon adsorber • Hot vapor recycle/superheated vapor system	• Rack parts so that solvent drains properly • Conduct spraying at a downward angle and within the vapor zone[a] • Keep workload in vapor zone until condensation ceases • Allow parts to dry within machine before removal
Fugitive	• Sump cooling system for downtime • Downtime cover or flaps • Closed piping for solvent and waste solvent transfers • Leakproof connections; proper materials of construction for machine parts and gaskets	• Routine leak inspection and maintenance • Close ports during downtime

Source: Reference 3.

[a] Applies to in-line vapor cleaners, but not in-line cold cleaners.

[b] Air/solvent interface for in-line cold cleaners.

TABLE 27. AVAILABLE CONTROL TECHNIQUES FOR COLD CLEANERS

Machine Design	Operating Practices
• Manual Cover	• Close machine during idling and downtime
• Water cover with internal baffles	• Drain cleaned parts for at least 15 seconds before removal
• Drainage facility (internal)	• Conduct spraying only within the confines of the cleaner

Source: Reference 3.

Emission Estimates

Solvent usage and emission factors for uncontrolled and controlled cleaners are shown in Table 28.[4,5] In this table, the uncontrolled emission factors are expressed in two ways. The factors on the first line are expressed in terms of MC emitted per total MC used in the cleaning operation. (The fraction not emitted is contained in waste solvent.) These factors may be more representative for estimating emissions from an individual facility that has information on the total MC it purchased (or consumed) for cleaning, regardless of whether that MC was fresh (virgin) solvent from an MC production plant or MC recovered from waste solvent and re-sold by a solvent recycling company.

The second line of factors were developed for estimating emissions from national data on how much fresh MC produced by MC producers was used for solvent cleaning. These factors are expressed in terms of emissions per kg of fresh MC used (see footnote "c").

National baseline emissions calculated using these emission factors are presented in Table 29.[4] These estimates take into account regulated and non-regulated counties in the United States. To estimate emissions, solvent usage for unregulated counties was multiplied by an emission factor that represented

TABLE 28. METHYLENE CHLORIDE USAGE AND EMISSION FACTORS FOR UNCONTROLLED AND CONTROLLED CLEANERS

Parameter	Cold Cleaners	Carburetor Cleaners[a]	OTVCs	In-line vapor cleaners	Photoresist strippers
Emissions Parameter					
Uncontrolled EF w/o recycle [kg emitted/kg total solvent used (fresh and recycled)][b]	0.66	0.66	0.78	0.85	0.70
Uncontrolled EF w/recycle (kg emitted/kg fresh solvent used)[c,d]	0.89	0.89	0.93	0.96	0.90
CTG Control System B efficiency (%)	17.0	60.0	40.0	60.0	60.0
Controlled EF w/recycle (kg emitted/kg fresh solvent used)[c,d]	0.87	0.76	0.89	0.91	0.78
Relative controlled fresh solvent usage (%)[e]	0.85	0.47	0.63	0.43	0.46

Sources: References 4 and 5.

[a] It is assumed that all carburetor cleaners are controlled at baseline, so only the controlled emission factor is used in calculations.

[b] This is the amount emitted by a cleaner per kg of total solvent (MC purchased for cleaning (includes virgin fresh solvent plus solvent bought from recycling companies).

[c] Emission factors are expressed on a fresh solvent (MC) feed basis. The units are kg emitted per kg fresh MC used.

[d] The term "recycle" refers to the information that, on a national basis, 75 percent of the MC contained in waste solvent streams is recovered by recycling companies and resold for further use in cleaning. This results in a reduction in the amount of fresh solvent required for a given cleaning application, but the percentage of fresh solvent usage that is ultimately emitted by the cleaning process is higher. See Appendix E for calculations and assumptions made for uncontrolled emission factor with recycle.

[e] The relative controlled solvent usage is defined as the amount of fresh solvent used by an uncontrolled cleaner to perform a given cleaning job.

EF = Emission Factor

TABLE 29. NATIONAL EMISSIONS OF MC FROM ORGANIC SOLVENT CLEANERS, (1987)[d]

Type of Cleaner	Emissions (Mg/yr)		
	Uncontrolled Cleaners[a]	Controlled Cleaners[b]	Total
Cold Cleaner	9,300	1,480	10,800
Carburetor Cleaner	0	1,620	1,620
Photoresist Stripper	6,540	1,110	7,650[c]
OTVC	3,230	1,490	4,720
In-Line Vapor Cleaner	1,370	430	1,800

Source: Reference 4.

[a] Refer to cleaners that are uncontrolled at baseline.

[b] Refers to cleaners assumed to be controlled with CTG Control System B at baseline.

[c] This includes baseline emissions at 755 Mg/yr reported by nine large photoresist stripping operations responding to EPA questionnaires in addition to emissions of 6,890 Mg/yr calculated using the approach described in this section.

[d] It is important to note that these emission estimates are based on 1983 solvent cleaning consumption estimates for fresh MC. Regulatory activity affecting the use of MC in recent years has resulted in fluctuations and decline in the use of MC. Methylene chloride 1991 consumption estimates for the solvent cleaning industry have been reduced 48 percent when compared with the consumption estimates that were used to calculate the emissions presented in Table 29.[1,3,4] However, it is not possible to apply this percent consumption decrease directly to scale down the 1983 national emission estimates to produce 1991 estimates, because other factors, such as county MC usage patterns and the distribution of controlled versus uncontrolled cleaners, have changed over time. These changes would need to be quantified to estimate emissions from current consumption.

uncontrolled solvent cleaners, and solvent usage for regulated counties was multiplied by an emission factor that represented controlled solvent cleaners.

REFERENCES FOR SOLVENT CLEANING AND PHOTORESIST STRIPPING

1. "Chemical Profile--Methylene Chloride," Chemical Marketing Reporter, 241(9):42, March 2, 1992.

2. "Solvent Use in Electronics--1989," Memorandum from Steve Risotto, Center for Emission Control, HSIA, Washington, DC, to Chris Sarsony, Radian Corporation, Research Triangle Park, NC, April 2, 1992.

3. Alternative Control Technology Document - Halogenated Solvent Cleaners, EPA-450/3-89-030, U.S. Environmental Protection Agency, Research Triangle Park, NC, August 1989.

4. "Calculation of Number of Organic Solvent Cleaners and Solvent Emissions and Use Per Model Plant," Memorandum from R.C. Mead and R.F. Pandullo, Radian Corporation, Research Triangle Park, NC, to D. Beck, U.S. Environmental Protection Agency, Research Triangle Park, NC, September 8, 1987.

5. "Documentation of Emissions and Long-Term Exposure Model Inputs for the Organic Solvent Cleaning Source Category," Memorandum from R.C. Mead and R.F. Pandullo, Radian Corporation, Research Triangle Park, NC, to D. Beck, U.S. Environmental Protection Agency, Research Triangle Park, NC, September 3, 1987.

AEROSOL PACKAGING AND DISPENSING

An aerosol is a suspension of solids or liquid particles in a gas that consists of a liquid and vapor phase. The liquid phase comprises active ingredients, solvent, and liquefied propellant or co-solvent. The vapor phase consists of the propellant that provides the positive pressure to expel the contents of the container.[1]

In an aerosol dispensing system, a liquid propellant keeps the pressure in the container constant as the product is being consumed. Methylene chloride is used in the aerosol industry as a solvent, co-solvent, and vapor pressure suppressor.[2] A solvent with the properties of MC acts to bring the active ingredient into solution with the propellant. A co-solvent is often used with MC when it is desirable to also have another liquid that is not miscible with the propellant (e.g., water). Methylene chloride, because of its high vapor pressure, high boiling point, formulation compatibility, and ability to depress the vapor pressure of high-pressure propellants, decreases the flammability of the formulation mixture and enhances dispersion of the aerosol spray.

Use of MC in aerosols has decreased because of Federal government labeling requirements on consumer goods containing potential carcinogens, such as MC. Substitutes for MC in aerosols with diversified uses include 1,1,1-trichloroethane (TCA), tetrachloroethane, mineral spirits, and water-soluble formulas.[3] Substitutes with limited uses include 1,1,2-trichloro-1,2,2,-trifluoroethane.[3]

Air emissions of MC result from packaging and consumer use of aerosols. The following sections discuss the aerosol packaging industry, aerosol packaging and dispensing processes, emission sources, and emission estimates of MC from aerosol packaging and use.

Aerosol Packaging Industry

There are an estimated 212 aerosol packaging companies, which consumed an estimated 8 percent (10,000 Mg) of the 1991 MC production.[4,5] The U.S. MC demand for use in aerosol products has decreased steadily in recent years because of environmental and occupational health concerns.[5] In 1987, aerosol

products containing MC reported by aerosol packaging companies included insecticides, cleaners, lubricants, spot removers, paints, primers, adhesives, sealants, enamels, and mold releases.[6] Since 1987, however, there has been a trend away from the use of MC toward the use of TCA in aerosol products. The U.S. production of TCA, however, is being phased out under the Montreal Protocol and the 1990 amendments to the Clean Air Act, as TCA is considered an ozone depleting substance. There has been a corresponding trend back toward the use of MC.[7] Solvent TCA production levels will be cut incrementally until phase-out at the end of the decade, and buyers are subject to an escalating excise tax to discourage use. Increasing pressure to find other solvent substitutes for MC is being exerted by the new OSHA-proposed MC exposure standard discussed in Section 3.[3]

Industry reports that the product types and range of MC content within the aerosol products reported in 1987 are similar to the MC content range within aerosol products today, but that the number of products, and volume of MC consumed by the aerosol industry has been dramatically reduced.[7] Consumption reduction of MC by the aerosol industry since 1987 is exhibited by Chemical Marketing Reports Chemical Profile of MC in 1991, which estimates a 49 percent reduction in aerosol consumption from 1988 (19,600 Mg/yr) to 1991 (10,000 Mg/yr).[5,8] A national list of 212 aerosol packagers that have the potential to consume chlorinated solvents was developed by the EPA in 1987. Appendix C includes the names, locations, and product types packaged at these facilities when data were available.[4]

Section 114 questionnaires containing questions about MC and other chlorinated solvent emission sources and methods of recovery or control were distributed to nine aerosol packaging companies. Eight of the nine companies' questionnaire responses (containing information on 11 facilities) were analyzed. Table 30 contains a list of aerosol product types reported in the Section 114 questionnaire responses and information on the amount of chlorinated solvent reported for each product type.[4]

TABLE 30. WEIGHT PERCENT OF METHYLENE CHLORIDE IN AEROSOL PRODUCT TANKS, REPORTED BY SECTION 114 QUESTIONNAIRE RESPONDENTS (1987)

	Methylene Chloride	
Product Type	Mean[a]	Range[b]
Spray Paints[c]	27	5-40
Insecticides	19	10-42
Lubricants[d]	17	5-55
Cleaners[e]	26	5-50
Adhesives	37	5-50
Paint Strippers	80	75-85

Source: Reference 4.

[a] The eight Section 114 questionnaire recipients were asked to provide the typical concentrations (weight percent) of chlorinated solvent in each product type. The value is the value of the reported typical concentrations.

[b] The range of typical concentrations reported by the eight questionnaire respondents.

[c] Includes enamels, coatings, primers, and rust inhibitors.

[d] Includes mold release agents and metal cutting fluids.

[e] Includes solvent degreasing cleaners, automotive, household, and electrical contact cleaners.

Process Description

Aerosol Packaging--

Aerosol packaging processes are batch-mode operations. Many companies contract out aerosol packaging because of high plant costs. Some companies fill other companies' products as well as their own, while others only fill aerosols for other companies.[3] Methylene chloride is generally supplied by an outside chemical supplier, who delivers the solvent either by a tank truck or by drums. Storage of MC can be in fixed-roof or pressurized tanks, or in the drums (normally 55-gallon drums) in which the solvent was delivered.[4]

The initial stage of the aerosol packaging process involves the mixing of the aerosol product ingredients in mixing tanks of varying sizes. Ingredients, including MC, are either pumped from storage tanks or are poured directly from storage drums. Ingredients are added according to volume or weight. In order to minimize solvent loss due to volatilization, some facilities add the solvent directly to the aerosol cans at the time of filling rather than adding the solvent at the mixing tank stage. Mixing tank ingredients, after being properly mixed, are either pumped or transported to the aerosol can filling lines.[4]

Aerosol can filling involves filling with product, inserting the valve stem and valve, adding propellant, and sealing the product in the can. Empty aerosol cans are conveyed to an automatic filler that uses filling nozzles to deliver the product into the empty cans. Filled aerosol cans are then conveyed to a point where the valve stems and valves are inserted into the can. The cans, still unsealed, are conveyed to a special "explosion-proof" room where the propellant is added to the cans. The cans are then sealed under pressure and conveyed to a point at which actuators are placed onto the stems. To complete the aerosol packaging process, each can is weighed to ensure weight requirements are met, submerged in a hot bath to check for leaks, and washed, labeled, capped, and packaged according to the particular requirements of the product.[4] An example of a typical aerosol spray system is illustrated in Figure 17.[9]

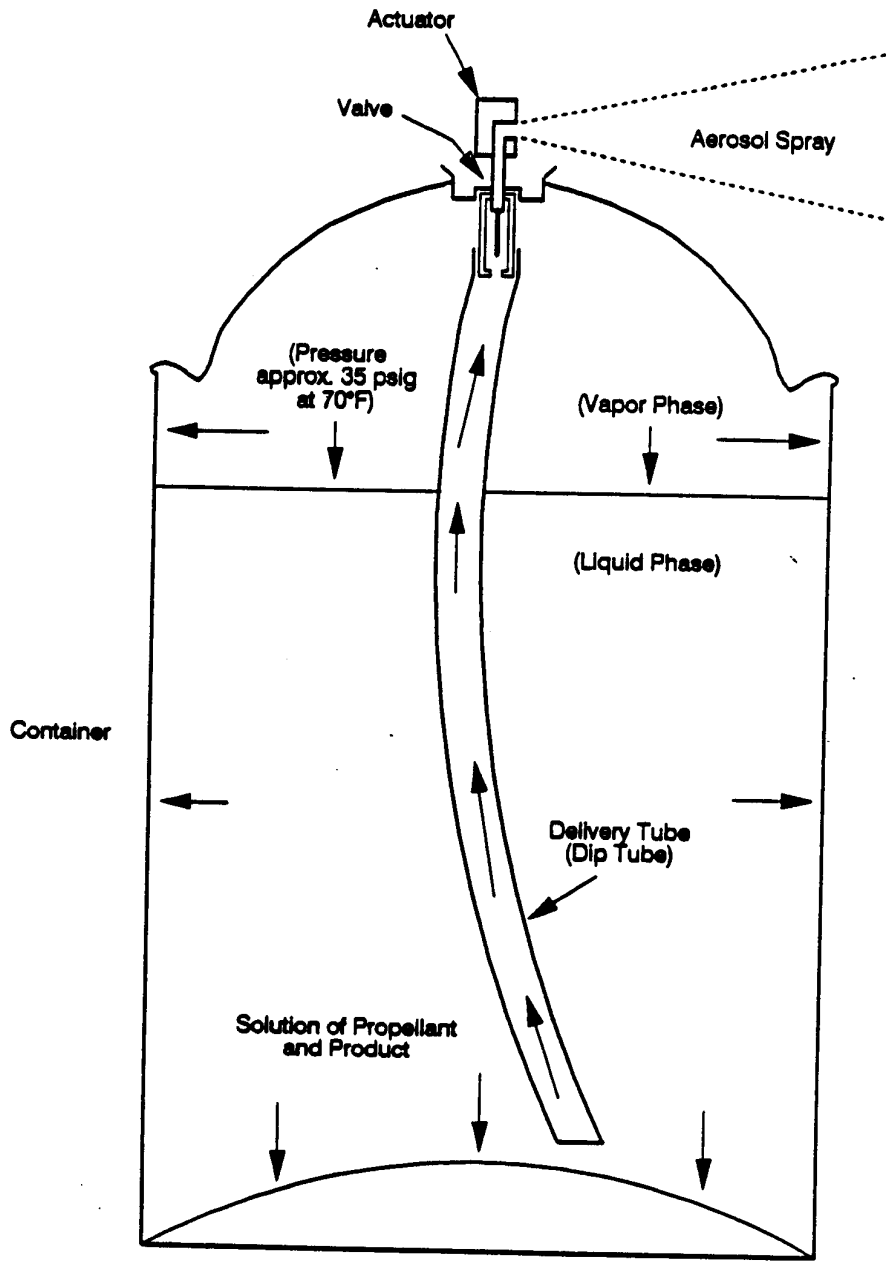

Source: Reference 9

Figure 17. Typical aerosol spray system.

4415338R

Aerosol Dispensing--

As illustrated in Figure 17, the aerosol spray dispensing product comprises of four basic components: propellant, product, container, and valve. A propellant is defined by the Department of Transportation as "a material which can expel the contents of an aerosol container at room temperature."[3] Propellants typically are liquefied gases with vapor pressures greater than atmospheric pressure, which enables product contents to be forced from the container when the valve is activated at room temperature. The product contains the solvent, co-solvent, and active ingredients that, in conjunction with the propellant, enable the product to perform its desired end function.

The dispensing process of an aerosol spray is achieved by depressing the actuator, which causes depression of the valve, releasing a solution of propellant and product to the air. The pressurized container allows propellants that are gaseous at atmospheric pressure to exist predominantly as a liquid. As the propellant is released, it converts to gas phase and disperses the product. Some gas-phase propellant remains in the container head space, while the rest is in equilibrium with the product. Examples of propellants used in aerosol dispensing systems include hydrocarbons, dimethyl ether (DME), hydrochlorofluorocarbon-152a (HCFC 152a), and compressed gases.[10]

Emission Sources

Aerosol Packaging--

Aerosol packaging process MC emissions may occur from the following general sources: storage tanks, handling operations (e.g., mixing tank loading), equipment leaks, wastewater, and accidental releases. Emissions from these sources to the atmosphere would be from the following:

- Building openings, which would release MC emissions along with other indoor air emissions;
- Process vents, which would release MC emissions directly from the source to the atmosphere, without dilution by other indoor air emissions; and
- Outdoor sources, which would include equipment used to store and transfer MC, and on-site wastewater treatment facilities.[4]

These MC emission sources from aerosol packaging processes are discussed in the following paragraphs.

Methylene chloride storage tank emissions occur from breathing and working losses. Breathing losses result from changes in barometric pressure and temperature, and working losses result from volumetric changes in the tank from filling or dispensing of stored solvent. Indoor storage tanks are expected to have minimal or negligible breathing losses because of indoor temperature controls that minimize diurnal temperature variation. Pressurized tanks that have pressures greater than the atmospheric pressure are not expected to have MC emissions.[4] An example calculation of storage tank emissions, using AP-42 methodology for storage of organic liquids, is presented in Appendix A. Accurate estimation of storage emissions, as discussed in Section 4, requires site-specific information.

Handling and transfer emissions result from filling and mixing tank operations, aerosol can filling, and aerosol can washing. Filling and mixing tank emissions are considered to be the most significant source of MC handling emissions, and occur as the solvent is added (i.e., the filling) to the mixing tank (as other ingredients are added), and during the mixing process itself.[4] Estimation of handling and transfer emissions require the summation of emissions from handling and transfer operations specific to a facility. The reader is referred to AP-42, Section 4.0, Evaporation Loss Sources, for use as a guideline in the estimation of these emissions.

Methylene chloride equipment leaks result from process equipment components leaking in a liquid or gaseous state. These losses may occur intermittently or continuously.[4] An example calculation for estimating emissions as a result of equipment leaks is presented in Appendix A. Methylene chloride emissions that occur during on-site treatment and disposal of wastewater, liquid waste, or solid waste are considered to be secondary emissions.[4] Appendix A contains a simplified example calculation for estimating MC emissions from secondary wastewater treatment processes. For a more detailed and accurate methodology for estimating MC emissions from secondary wastewater treatment, the reader is referred to the EPA document "Industrial Wastewater Volatile Organic Compound Emissions--Background Information for BACT/LAER Determinations. EPA-450/3-90-004." As with MC production, methodologies to estimate emissions require site-specific parameters in order to represent emission potential accurately.

Methylene chloride emission controls that may be incorporated in the aerosol packaging process include storage tank refrigerated condensers, process vent carbon adsorbers, and process vent refrigerated condensers. The use of refrigerated condensers lowers the vapor pressure, and therefore, the emission potential of the solvent. Additional control techniques with associated control efficiencies for emissions of chlorinated solvents from aerosol packagers is shown in Table 31.[4] Methylene chloride evaporation losses may also be controlled by the use of external or internal floating-roof tanks in place of fixed-roof tanks. Control efficiencies for these tanks vary according to the size of the tank and the type of seal employed.

Aerosol Dispensing Processes--

Emission of MC from aerosols result from the use of the product, and the crushing, compacting, leakage, corrosion, and permeation of the aerosol container that contains MC. Methylene chloride emissions from the consumption of aerosol products result from the volatilization of suspended droplets or by evaporation from sprayed surfaces.

Methylene chloride emission controls that may be employed include minimization of MC content and integrity maintenance of the aerosol container.

Emission Estimates

Aerosol Packaging Process Emission Estimates--

Methylene chloride emission estimates from aerosol packaging processes, based on Section 114 responses in 1987, were determined and documented in 1988 under a previous EPA project.[12] Emissions were estimated for storage tanks, handling operations, indoor and outdoor equipment leaks, secondary sources, and accidental releases. The calculation procedures are documented in another memo.[12] Estimates of emissions from 10 of the 11 1987 Section 114 responses were used to determine MC emissions for the remaining 184 facilities that used

TABLE 31. CONTROL TECHNIQUES FOR EMISSIONS OF CHLORINATED SOLVENTS FROM AEROSOL PACKAGERS (1988)

Emission Source	Control Technique	Emission Reduction Efficiency (%)
Storage tank	Refrigerated condenser	95
Mixing Tanks (Handling)	Carbon Adsorption[a]	95
	Refrigerated condenser[a]	95
Equipment Leaks		
Pump Seals (packaged and mechanical)	Monthly LDAR	61
Flanges	None Analyzed	--
Valves (liquid)	Monthly LDAR	59
Valves (gas)	Monthly LDAR	78
Sample Connections	Closed-purge sampling	100
Open-Ended Lines	Caps on open ends	100
Secondary Sources	None analyzed	0

Source: Reference 4.

[a] Control option also includes covering the mixing tank and installing ductwork from the mixing tank to the adsorber or condenser to recover chlorinated solvent emissions.

LDAR = Leak Detection and Repair

MC in their aerosol products filled.[12] Table 32 presents the emission estimates from these 10 Section 114 responses.

The MC consumption reported in the 10 Section 114 responses was 8,400 Mg/yr, and reported emission estimates were 81.4 Mg/yr. An emission factor for the entire aerosol packaging process, based on the uncontrolled aggregate emissions/consumption for these 10 questionnaire respondents, is 0.01 Mg/Mg MC consumed (19.4 lb/ton consumed).[13]

Aerosol Dispensing Process Emission Estimates--

There are no MC emission estimates available for the use of aerosol products at this time. Trends away from MC use in aerosol products, however, should reduce emissions proportionately to the reduction of use. Methylene chloride content is ultimately considered to be released to the environment via differing media (e.g. soil, air, and water). The only emission factor found in the literature for aerosol products use was the worst-case assumption that MC emissions are 1 kg/kg MC contained in product applied (2000 lb/ton MC contained in product applied).[13]

TABLE 32. ESTIMATED METHYLENE CHLORIDE EMISSIONS FROM AEROSOL PACKAGERS IN 1987

		Methylene Chloride Emissions (Mg/yr)					
					Equipment Leaks		
Company Name	Location	Total	Storage	Handling	Outdoor	Indoor	Secondary
New York Bronze Powder Co.	Elizabeth, NJ	18.1	6.6	8.3	NR	3.2	NR
New York Bronze Powder Co.	Taylor, PA	24.9	2.6	18.1	NR	4.2	NR
Percy Harms corporation	Wheeling, IL	0.6	0[a]	0.4[b]	NR	0.2	NR
Plaze, Inc.	St. Louis, MO	2.4	0.5	0.6	NR	1.3	NR
Seymour of Sycamore	Sycamore, IL	5.8	0.2	5.5[c]	0.1	<0.1	NR
Sherwin-Williams Co.	Anaheim, CA	4.5	0.3	4.1	NR	0.1	NR
Sherwin-Williams Co.	Bedford Heights, OH	9.6	2.0	6.1	0.5	1.0	NR
Sherwin Williams Co.	Elk Grove village, IL	0.8	0.2	0[d]	0.3	0.3	NR
Speer Products	Memphis, TN	13.2	1.4	11.6	0.03	0.2	NR
Zep Manufacturing	Atlanta, GA	1.5	0.2	0.8	0.3	0.2	<.01
Total		81.4	14.0	55.5	1.2	10.7	<.01

Source: Reference 4.

[a] A pressurized tank is used to store MC at this facility.

[b] Estimate includes 0.2 Mg/yr for aerosol can washing.

[c] Estimate includes 1.3 Mg/yr for aerosol can washing.

[d] No mixing operations are used at this facility because aerosol ingredients are added directly from storage to the product containers.

NR = Not reported.

REFERENCES FOR AEROSOL PACKAGING AND DISPENSING

1. J.M. Reynolds, Cost Effective Replacements for Chlorinated Solvents and Glycol Ethers, Spray Technology and Marketing, Industry Publications, Inc., Fairfield, NJ, July 1991.

2. L.W. Patrick, Spray Technology and Marketing. Industry Publications, Inc., Fairfield, NJ, December 1991.

3. Occupational Safety and Health Administration Proposal for New Methylene Chloride Standard, 56 FR 57046-57047, 57068-57059, November 7, 1991.

4. "Emission Estimates and Controls from those Aerosol Packaging Facilities Responding to Section 114 Questionnaires," Memorandum from J. Martinez, R. Wassel, and G. Bockol, Radian Corporation, Research Triangle Park, NC, to the Methylene Chloride Source Category Investigations File, U.S. Environmental Protection Agency, Research Triangle Park, NC, October 13, 1987.

5. "Chemical Profile--Methylene Chloride," Chemical Marketing Reporter, 241(9):42, March 2, 1992.

6. "Documentation of Telephone Communications Concerning the Packaging and Localized Large-Scale Users of Aerosol Products," Memorandum from G. Bockol, Radian Corporation, Research Triangle Park, NC, to the Methylene Chloride Source Category Investigations File, U.S. Environmental Protection Agency, Research Triangle Park, NC, February 6, 1987.

7. "Methylene Chloride Use in Aerosols as Compared with 1987 Uses," Telephone communication from Joanne O'Loughlin, Radian Corporation, Research Triangle Park, NC, with Stephanie Kubik, Sprayon Products - Division of the Sherwin-Williams Company, March 25, 1992.

8. "Chemical Profile--Methylene Chloride," Chemical Marketing Reporter, February 20, 1989.

9. Volatile Organic Compound Emissions from Consumer and Commercial Products, Aerosol Products and Packaging Systems, Report to Congress, U.S. Environmental Protection Agency, Research Triangle Park, NC, December 1991.

10. Aerosol Products Workshop Summary, EPA Contract Number 68-02-3816, U.S. Environmental Protection Agency, Research Triangle Park, NC, and the Chemical Specialties Manufacturers Association, Washington, DC, October 24, 1990.

11. Industrial Wastewater Volatile Organic Compound Emissions -- Background Information for BACT/LAER Determinations, Chapter 4, EPA-450/3-90-004, U.S. Environmental Protection Agency, Research Triangle Park, NC, March 1990.

12. "Documentation of Baseline and Controlled Emission Parameters for Aerosol Packagers," Memorandum from E. Moretti, Radian Corporation, Research Triangle Park, NC, to the Methylene Chloride Source Category Investigations File, U.S. Environmental Protection Agency, Research Triangle Park, NC, January 19, 1988.

13. Crosswalk/Air Toxic Emission Factor Data Base Management System (XATEF), Version 1.2, Diskette, U.S. Environmental Protection Agency, Research Triangle Park, NC, 1991.

MISCELLANEOUS

Approximately 5 percent of the total U.S. consumption of MC is for miscellaneous uses such as pesticide manufacture, photographic film processing, food processing, rubber cement and rubber accelerator manufacture, dye carrying, solid waste treatment, storage and disposal (TSD), and site remediation. Information gathered on pesticide manufacture and photographic film processing, the largest two MC users in this miscellaneous group, are discussed briefly in the following text. In addition, MC use in paints and coatings is outlined.

Pesticide Manufacturing

Methylene chloride may be used in two areas of the pesticide industry: (1) the manufacture of the pesticide; and (2) the formulation of the pesticidal materials with the necessary additives and inert carriers. Previous studies indicate that there are about 140 individual pesticide manufacturing facilities and 200 to 300 formulation plants located throughout the United States.[1,2] However, only a fraction of these may use MC.[1] One source estimates that 60 manufacturers/formulators use 10 million pounds of MC per year.[3] The location of these facilities or the amount, if any, of MC used by each were not verified in this study.

Methylene chloride has several applications in the pesticide manufacturing industry, including extraction, phase separation, purification, crystallization, and as a general transport solvent.[1] In the formulation of pesticide products, MC is sometimes used as a solvent to produce liquid products from granular active ingredients.[3] However, according to OSHA, there is an indication that MC usage in pesticide processes will soon be phased out because of health concerns. Products that have been substituted for MC included petroleum distillates, aqueous formulas, mineral spirits, and Agatane.[3]

Because of concern that some inert ingredients in pesticide products might cause adverse effects in humans or the environment, EPA developed a regulatory policy for inert ingredients.[4] The EPA divided the approximately 1,200 inert ingredients contained in pesticide products into four toxicity categories: Lists 1 and 2 contain inerts of toxicological or potentially

toxicological concern, and Lists 3 and 4 contain inerts of unknown toxicity or minimal concern. Methylene chloride is found on List 1. According to one pesticide formulator, List 1 chemicals can be used in pesticides as long as there is a warning on the product label, but to his knowledge, most of the constituents (such as chlorinated solvents) are no longer used in these products.[5]

Process Description--

The methods and exact technology for manufacturing pesticides varies considerably depending on the type of pesticide, but MC is frequently used in certain manufacturing steps. The pesticide industry employs the same unit processes and operations used in the chemical processing industry.[1] These include chemical reactions, filtering, separation operations, condensation, and drying. Production processes are usually carried out at ambient or slightly above ambient temperatures. Elemental chlorine is the raw material common to most pesticide production and is also frequently used to prepare other raw materials used for pesticide production.

Emissions--

Air emissions from pesticide facilities include particulates, gases, and vapors that may emanate from process equipment at each step of the manufacturing process.[1] Sources include process vents, storage, transfer, handling, equipment leaks, and wastewater. An inspection of one pesticide manufacturing facility revealed 26 potential sources (e.g., pellet mill, grinding unit, Munson mixer, bagging unit) of air pollution and 13 emission points (e.g., baghouse/cyclone, exhaust hoods, vents, and fans).[6] The MC emissions from three of these emission points can be found in Table 33.[6]

A comprehensive survey of typical control techniques and control levels for pesticide manufacturing/formulating was not undertaken. However, control techniques employed by several pesticide facilities using MC include condensers, recycling systems, and incinerators.[1] In general, applicable control techniques would be similar to those discussed in Section 4 for MC production.

TABLE 33. EMISSIONS FROM THREE POINTS AT A PESTICIDE FACILITY, 1988

Source	MC Emissions kg/yr (lb/yr)
Pellet Mill	334.7845 (738)
Marion Mixer	431.1803 (951)
Liquid Blending Area #1	12.4344 (27)

Source: Reference 6.

NOTE: Emission data are for one facility only and do not represent average emissions for all such sources, or total emissions for all sources.

Photographic Film Manufacture

Methylene chloride is a key component in the manufacture of cellulose triacetate-based films. It is used with heat to dissolve cellulose triacetate pellets in order to produce a fine, transparent layer which is rolled onto photographic paper. This layer must be transparent, durable, and flexible. Other materials used in the manufacturing process are plasticizers and small amounts of other solvents.[9] Virtually all still camera, graphic arts, and photographic films in use in the United States are cellulose triacetate-based. Substitutes for MC in this process have not been identified.[7]

Photographic film is currently produced at two sites. The largest facility is owned and operated by Eastman Kodak, with a facility located in Rochester, New York. This plant consumes approximately 4 Mg (9 million pounds) of MC annually.[8] Anitec Image Technology Corporation in Binghampton, New York uses approximately 0.9 Mg (1.9 million pounds).[9]

Process Description--

Several steps are required in the development of cellulose triacetate film. These steps are represented in Figure 18. Methylene chloride, plasticizers, cosolvents, and solid cellulose triacetate pellets are heated to produce a thin slurry called "crude dope." The dope is 60-65 percent MC by weight.[9] Vapors from this melting process are recovered by use of distillation equipment. The crude dope is then transported through the filtration process by use of a continuous screen, continuous wash, and multiscreen filters. This process is completed in a closed system; however, the continuous wash and multiscreen filters are changed four to five times per day.

The filtered dope is no longer considered crude at this point. It is fed into a receiving hopper that extrudes dope onto a large, polished cylindrical wheel, called a rollcaster. The dope is trimmed from the wheel, leaving a thin sheet or "web" that is dried at 121-138°C in an enclosed chamber. The MC is nearly completely evaporated in this process. The roll casting process is operated in a semi-enclosed manner, with some of the evaporating MC removed, and the remainder exhausted to the atmosphere.[9]

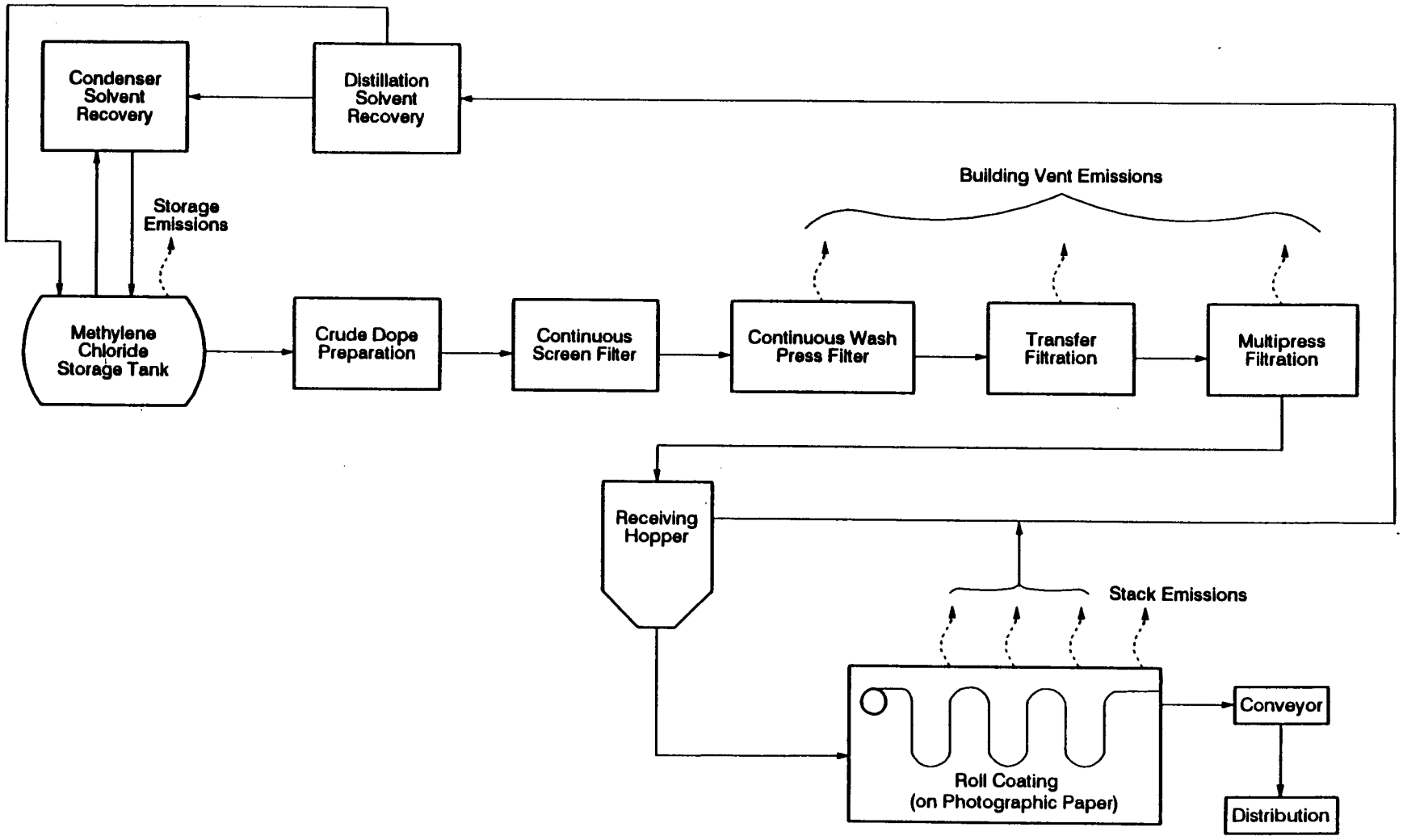

Figure 18. Photographic film process with MC emission sources.

6427327R

Emissions--

Emissions from the manufacture of cellulose triacetate-based film can result from three basic stages of production: dope preparation, roll coating, and distillation or recycling. Numerous emission sources have been identified, but data have only been released for the most significant sources.

Dope production is the process of dissolving cellulose triacetate pellets. This is generally initiated by use of continuous mixers; however, batch mixers may be occasionally used. Emissions can be significant when these pellets are introduced to the mixing chamber during batch mixing. Current emission estimates for this activity are not available because the frequency of batch mixing has decreased markedly in recent years. Two other significant emission points in the dope production phase occur when filters for the continuous wash, transfer, and multipress filtration units are changed.[9,13] This process occurs approximately twice per day for each unit. The filters are removed from a cylindrical housing and allowed to evaporate. Emissions from this process have been estimated to be higher than all other dope production sources.

All other sources of MC emissions from dope production are associated with storage tanks and general building ventilation. The largest of these points are from "floor sweeps." These are ducted vents located near the filter housings that exhaust MC that accumulates near the floor.

Emissions from the roll coating machine represent over 90 percent of the emissions at a typical facility. During solvent evaporation of the film base web, local exhaust ventilation transports vapors to distillation and condenser recovery systems. This system recovers approximately 95 percent of the MC vapors in the process. The remaining 5 percent are released into the building, which has a ventilation design to rapidly move vapors from the floor and out of the building through vents or stacks. Large volumes of MC and the high temperatures at which the system operates account for the high level of emissions relative to other process functions. The building ventilation system, which serves primarily as a method to reduce workers’ exposures, may also contribute to the building emissions.[9]

The other major process function in the manufacture of cellulose triacetate film is the distillation of recovered vapors. The major point of emissions from this source are likely to be storage tanks associated with the process.

Control technologies at the Kodak Rochester facility have included carbon adsorbers, scrubbers, condensers and vapor return. The exact locations of many of these controls have not been released. However, several control methods are used to recover MC. Carbon adsorbers have been applied at the roll coating machines exhaust air and building openings. Scrubbers have been applied in the solvent recovery systems. Reliable estimates of control efficiencies for these systems are not available. Other controls for fugitive emissions have included the selection of new valves with tighter seals and an increase in inspection and maintenance of existing potential process leaks. The pending OSHA regulations may significantly affect the type of controls that may be implemented.

Paints and Coatings

The paint and coatings industry encompasses a wide variety of products with many different end uses. A paint or coating is defined as a "liquid, liquefiable, or mastic composition that is converted to a solid, protective, decorative or functional adherent film by the application of a thin layer."[10]

Paints and coatings are produced by an estimated 390 facilities that consume 12,700 Mg of MC annually.[11] Paint and surface coatings are formulated by mixing three elements: synthetic polymer resins, which act as a binding agent, a dispersion medium (water or a volatile solvent), and pigments. Methylene chloride may be used in some products as a cosolvent in the dispersion medium to promote faster drying and dissolve binders during application. The main ingredients used in solvent-based paints are mineral spirits or petroleum naphtha products. Because MC reacts with dried paints on previously painted surfaces, its composition in paints is relatively low -- one or two percent by weight.[11]

For paints and coating products, recent emphasis on production of low-VOC products may increase the demand for additional MC use as a cosolvent because MC may be exempted from regulation as a VOC under state regulations

implementing the national ambient air quality standard for ozone.[12] The impact of these regulations, however, is highly speculative at this time.

Methylene chloride emissions data for paints and coatings formulation and use was not found.

REFERENCES FOR MISCELLANEOUS SECTION

1. Survey of Methylene Chloride Emission Sources, EPA-450/3-85-015, U.S. Environmental Protection Agency, Research Triangle Park, NC, June 1985.

2. T. Ferguson, Pollution Control Technology for Pesticide Formulators and Packagers, EPA-660/2-74-094. U.S. Environmental Protection Agency, Research Triangle Park, NC, January 1975.

3. Occupational Safety and Health Administration Proposal for New Methylene Chloride Standard, 56 FR 57053, 57069, November 7, 1991.

4. Inert Ingredients in Pesticide Products; Policy Statement, 52 FR 13305, April 22, 1987.

5. Written communication from Jim Case, S.C. Johnson & Son, Inc., Racine, WI, to Candace Blackley, Radian Corporation, Research Triangle Park, NC, September 10, 1991.

6. High Risk Point Source Study for the Formulation of Pesticides and Agricultural Chemicals at Southern Mill Creek Products, Inc. (SMCP), Tampa, Florida, Air Toxics Section of the Environmental Protection Commission of Hillsborough County, pp. 1-9, Appendix E, May 1990.

7. S.A. Walata and R.M. Rehm, Source Characterization and Control Technology Assessment of Methylene Chloride Emissions from Eastman Kodak Company, Rochester, New York, EPA-600/2-89-043. U.S. Environmental Protection Agency, Research Triangle Park, NC, 1989.

8. White Paper -- Methylene Chloride. Halogenated Solvents Industry Alliance, Washington, DC, February 1989.

9. Occupational Safety and Health Administration Proposal for New Methylene Chloride Standard, 56 FR 57066, November 7, 1991.

10. "Paint--Tests for Formulated Products and Applied Coatings," 1990 Annual Book of ASTM Standards, Volume 06.01, R. Storer, et al. eds., American Society for Testing and Materials, Philadelphia, PA, 1990.

11. Occupational Safety and Health Administration Proposal for New Methylene Chloride Standard, 56 FR 57102, November 7, 1991.

12. "Summary of Information Obtained Through Telephone Contact with Formulators, Distributors, and Users of Methylene Chloride-Based Paint Strippers," Memorandum from I. McKenzie, Radian Corporation, Research Triangle Park, NC, to the Paint Stripping Facilities Project File, U.S. Environmental Protection Agency, Research Triangle Park, NC, January 22, 1987.

SECTION 6
SOURCE TEST PROCEDURES

Methylene chloride emissions can be measured by a combination of the following methods:[1] (1) EPA Method 0030; (2) EPA Method 5040; (3) EPA Method 5041; (4) EPA Method 18; (5) Compendium Method TO-1; (6) Compendium Method TO-2; (7) Compendium Method TO-14; and (8) NIOSH Method 1005. Each of these methods is discussed in the following paragraphs.

EPA METHOD 0030

EPA Method 0030, which was published in EPA Report No. SW-846[2] in November, 1986, is a sampling method used to determine the destruction and removal efficiency (DRE) of volatile principal organic hazardous constituents (POHCs) from stack gas effluents from stationary sources. EPA Method 0030 is used for sampling MC emissions from stack gas effluents.[1] This methodology is applicable for sampling volatile constituents with boiling points between 35°C and 100°C; the boiling point of MC is within this range.

In Method 0030, a sample of effluent gas is withdrawn from an emission source using a glass-lined probe and a volatile organic sampling train (VOST). The gas stream is cooled through a water-cooled condenser and volatile POHCs are collected on a pair of sorbent resin traps, the first containing Tenax® and the second containing Tenax® and petroleum-based charcoal. Liquid condensate is collected in an impinger placed between the two resin traps. A schematic diagram of the VOST system is shown in Figure 19.

The sensitivity of this method depends on the level of interferences in the sample and the presence of detectable levels of volatile POHCs (in this case, MC) in the blanks. Interferences can arise from contamination of sorbent traps prior to or after use in sample collection.[3] Exposure of the sorbent materials to solvent vapors prior to assembly can be one source of interferences. Because MC is a common field recovery solvent, laboratory solvent, and laboratory air contaminant, contamination of the sorbent traps from these sources can also be a problem. Exposure to significant concentrations of volatile POHCs such as MC in the ambient air at chemical plants and other sources previously discussed is another

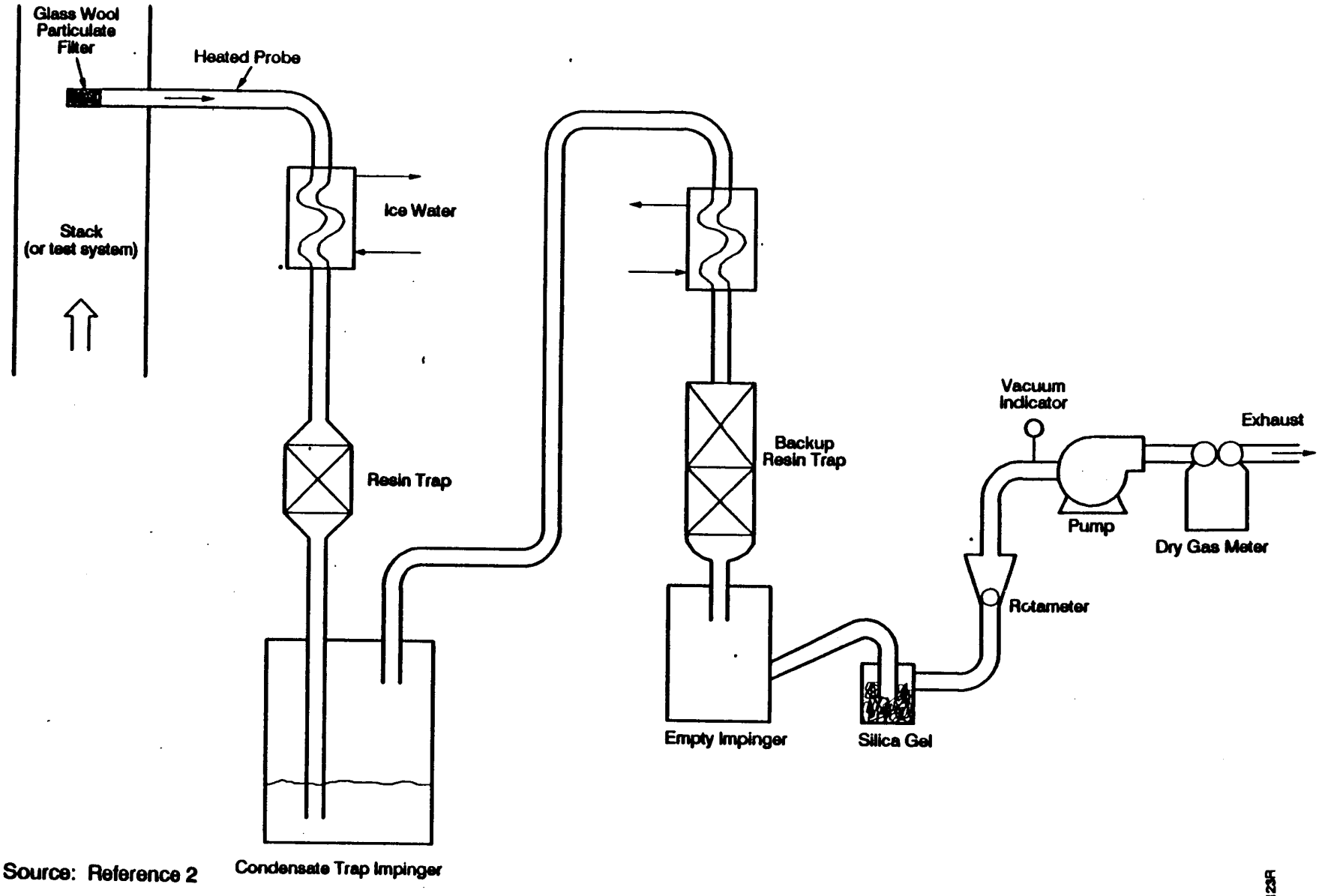

Source: Reference 2

Figure 19. Schematic of volatile organic sampling train (VOST).

potential interference. A sufficiently high background level in the source can make it impossible to determine trace quantities in the samples.

EPA METHODS 5040 AND 5041

EPA Methods 5040 and 5041 are both used to analyze POHCs collected from stack gas effluents of stationary sources. Method 5040 was published in the November 1986 Report No. SW-846.[2] Methods 5040 and 5041 are the primary analytical methods for determining the concentration of MC in stack emissions sampled using the VOST Method, EPA Method 0030.[1] The combination of Methods 0030/5040 or 5041 is intended for trace levels of organic compounds in emissions (i.e., ppb, low ppm). If the concentration in the source is hundreds of ppm or percentage levels, these methods are not appropriate. Because the majority of gas streams sampled using VOST will contain a high concentration of water, the analytical method is based on the quantitative thermal desorption of volatile POHCs from the Tenax® and Tenax®/charcoal traps. Purge-and-trap gas chromatography/mass spectrometry (GC/MS) is used to perform the analysis. The major difference between Methods 5040 and 5041 is the analytical column required. In Method 5040, a packed glass column is used; a Megabore® capillary column is used in Method 5041.

A schematic diagram of the analytical system is shown in Figure 20. The sorbent cartridges are spiked with internal standards and surrogates, thermally desorbed, and the VOCs are trapped on an analytical adsorbent trap directed into the GC/MS. The volatile POHCs are separated by temperature-programmed GC and detected by low-resolution MS.

The concentrations of volatile POHCs are calculated using the internal standard technique. Sample trains obtained from the VOST should be analyzed within two to six weeks of sample collection. The desired target detection limit of these methods is 0.1 nanogram per liter (ng/ℓ) (20 ng on a single pair of traps).

As with VOST sampling, solvent contamination can occur with analysis. Therefore, appropriate use of laboratory and field blanks is crucial for obtaining accurate quantitative values. Other concerns that may need to be addressed when using Methods 5040 and 5041 include

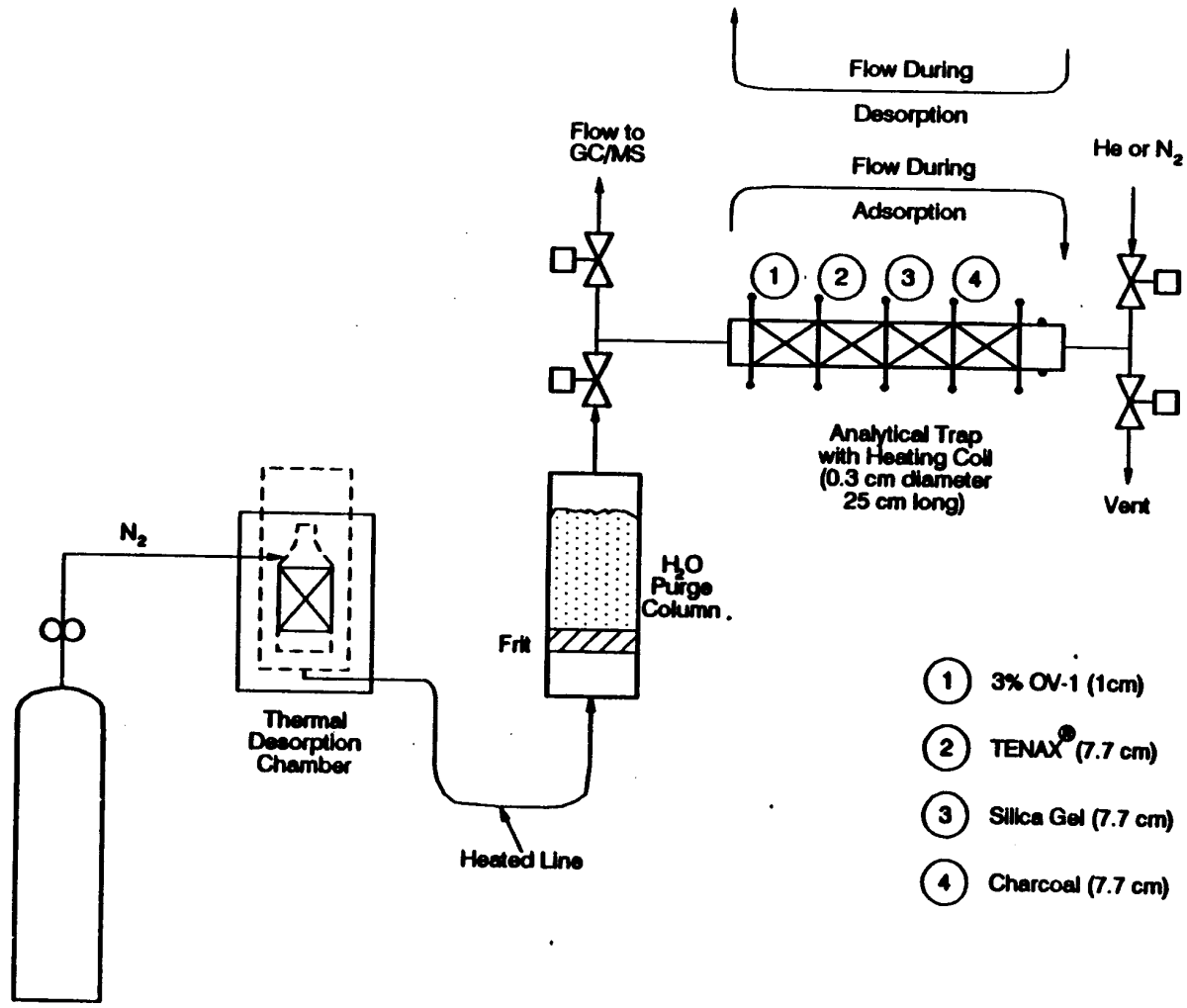

Source: Reference 3

Figure 20. Schematic diagram of trap desorption/analysis system.

310396SR

saturation of the sampling cartridges with the analyte (MC) or other compounds found in the stack gas emissions, and background interferences during analysis.

Interferences occur when something impairs the analyst's ability to make an accurate determination. In the case of a chromatographic method, this impairment is usually due to the presence of coeluting peaks that may arise from contamination of the sampling medium (sorbents). However, major sources of interference are constituents of the background during sampling. Many sources have a moderate to high background of hydrocarbons, some of which may coelute with MC and which may have common mass spectral ions. Other constituents of the source background may also provide chromatographic and mass spectral interference that will impair the ability of the analyst to perform an accurate determination.[4]

EPA METHOD 18

EPA Method 18 was announced in the Federal Register on October 18, 1983, and is published in Appendix A of 40 CFR Part 60.[5] It applies to the sampling and analysis of approximately 90 percent of the total gaseous organics emitted from an industrial source.[1] Method 18 is an alternative sampling and analytical method for VOCs (including MC). It can be used for single analytes or for a small number of multiple analytes. Method 0030, combined with Methods 5040 or 5041, has a broader application to a wider range of analytes and may, therefore, be preferred if there is a need to analyze for many organics. Method 18 has been used extensively for testing emissions from the chemical industry and other source categories emitting VOC.

In Method 18, a sample of the exhaust gas to be analyzed is drawn into a Tedlar® or aluminized Mylar® bag, as shown in Figure 21.[5] The bag is placed inside a rigid, leakproof container and evacuated. The bag is then connected by a Teflon® sampling line to a sampling probe (stainless steel, Pyrex® glass,or Teflon®) at the center of the stack. The sample is drawn into the bag by pumping air out of the rigid container.

The sample is then analyzed by GC coupled with flame ionization detection (FID). Based on field and laboratory studies, the recommended time limit for analysis is within 30 days of sample

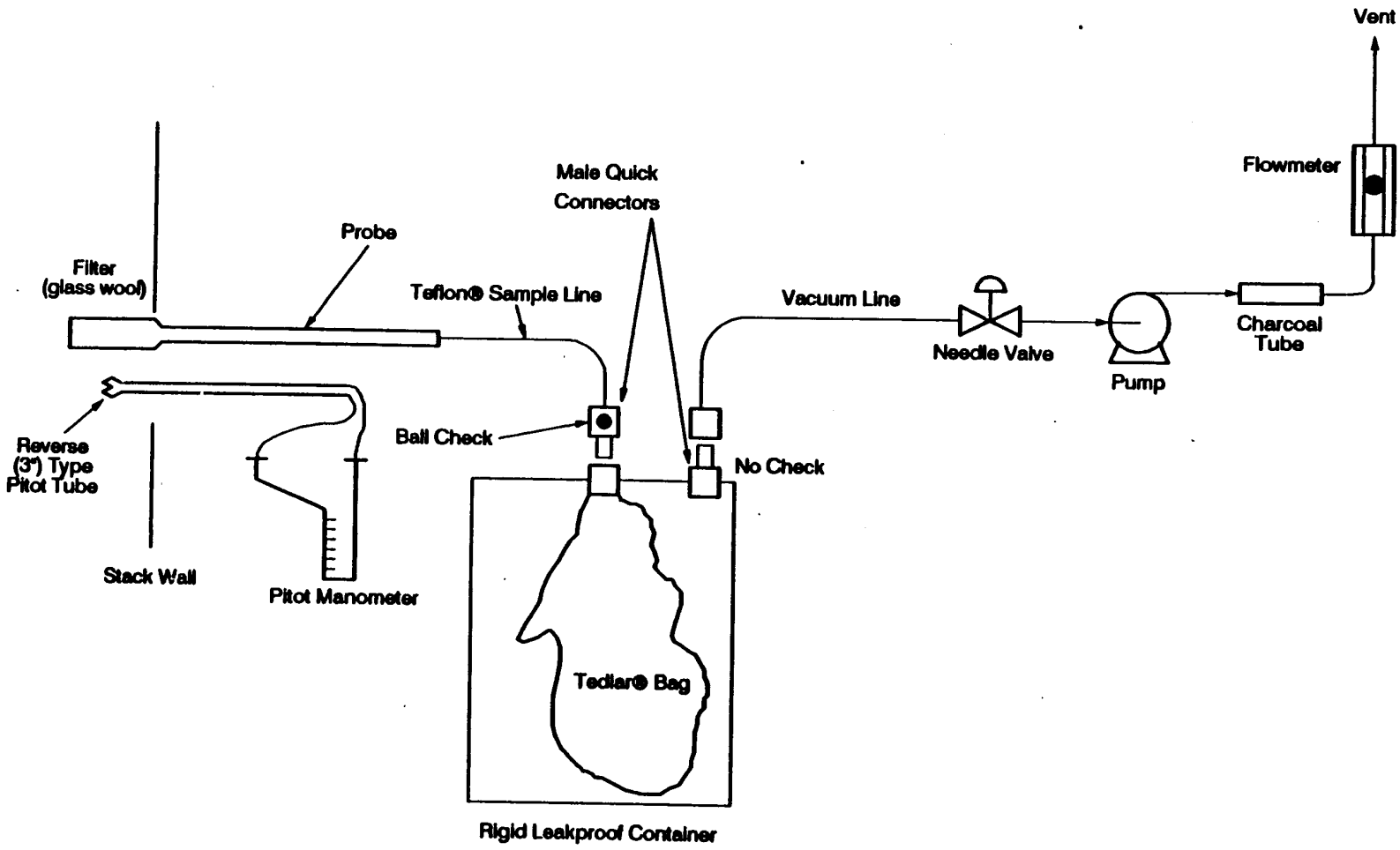

Source: Reference 5

Figure 21. Intergrated bag sampling train.

11817208

collection.[3] The GC operator should select the column and GC conditions that provide good resolution and minimum analysis time for MC. Zero grade helium or nitrogen should be used as the carrier gas at a flow rate that optimizes the chromatographic resolution.

The peak areas corresponding to the retention times of MC are measured and compared to peak areas for a set of standard gas mixtures to determine the MC concentrations. The detection limit of this method ranges from about 1 part per million (ppm) to an upper limit governed by the FID saturation or column overloading. However, the upper limit can be extended by diluting the stack gases with the inert gas or by using smaller gas sampling loops.

When access to the sampling location is difficult, an alternative sampling method described in Section 7.4 of EPA Method 18 may be preferred.[3]

COMPENDIUM METHODS TO-1, TO-2, AND TO-14

Compendium Methods TO-1, TO-2, and TO-14 are sampling and analytical methods used to determine VOCs such as MC in ambient air, and can be found in the "Compendium of Methods for the Determination of Toxic Organic Compounds in Ambient Air."[6] These methods are not appropriate for source monitoring.[1]

Method TO-1

Method TO-1 is used to collect and determine volatile, non-polar organics that can be captured on Tenax® and determined by thermal desorption techniques. In this method, air is drawn through a cartridge containing 1-2 g of Tenax®. The cartridge is analyzed in the laboratory for MC and purged with an inert gas into a GC/MS system. Only capillary GC techniques should be used. The GC temperature is increased through a temperature program and the compounds are eluted from the column on the basis of boiling points. The MS identifies and quantifies the compounds by mass fragmentation patterns. Compound identification is normally accomplished using a library search routine on the basis of GC retention time and mass spectral characteristics.

Method TO-2

In Method TO-2, air is drawn through a cartridge containing 0.4 g of a carbon molecular sieve (CMS) adsorbent. The cartridge is analyzed in the laboratory by flushing with dry air to remove adsorbed moisture and purging the sample with helium while heating the cartridge to 350-400°C. The desorbed organics (such as MC) are collected in a cryogenic trap and flash-evaporated into a GC/MS system. Only capillary GC techniques should be used. The GC temperature is increased through a temperature program and the compounds are eluted from the column on the basis of boiling points. The MS identifies and quantifies the compounds by mass fragmentation patterns. Compound identification of MC is normally accomplished using a library search routine on the basis of GC retention time and mass spectral characteristics.

Method TO-14

Method TO-14 is based on the collection of whole air samples in SUMMA® passivated stainless steel canisters for analysis of VOCs (MC) in ambient air. A sample of ambient air is drawn through a sampling train of components that regulate the rate and duration of sampling into a pre-evacuated SUMMA® passivated canister. The canister is attached to the analytical system. Water vapor may be reduced in the gas stream by a Nafion® dryer and VOCs are concentrated by collection into a cryogenically-cooled trap. The cryogen is removed and the temperature of the sample raised to volatilize the sample into a high-resolution GC. The GC temperature is increased through a temperature program and the compounds are eluted from the column on the basis of boiling points into a detector.

The choice of detector depends on the specificity and sensitivity required by the analysis. Gas chromatography ultimately relies on retention time for identification of compounds. In many cases, this use of retention time is enhanced by the information from a selective gas chromatographic detector. However, it cannot be determined from GC alone whether coelution of compounds is occurring, or whether a particular peak represents a particular compound. When mass spectrometry is used as the detector, a mass spectrum can provide compound-specific information and can show whether other compounds are present at a given retention time.[4]

In Method TO-14, a capillary column with methyl silicone coating, or equivalent is specified for detecting MC.[6] A wider Megabore® column can be used as long as the system meets user needs. Compounds have been successfully measured at the parts per billion by volume (ppbv) level using this method.

NIOSH METHOD 1005

The NIOSH methods are used to measure ambient air in workplace environments. NIOSH Method 1005, which was published in the 1985 "NIOSH Manual of Analytical Methods", is used to measure MC in the workplace.[7]

In NIOSH Method 1005, air samples are collected with solid sorbent tubes containing coconut shell charcoal. A personal sampling pump is used to collect 1.5 - 2.5-ℓ air samples at a flow rate of 0.01 to 0.2 ℓ/min. Samples are desorbed with carbon disulfide and analyzed by GC equipped with an FID. The column specified in NIOSH Method 1005 is a 3.0 m x 3 mm stainless steel, 10% SP-1000 on 80/100 mesh Chromosorb® W-HP, or equivalent.[7] The amount of MC in a sample is obtained from the calibration curve in units of milligrams per sample. The working range of NIOSH Method 1005 is 100 to 3000 ppm for a 1-ℓ air sample. The method is applicable to ceiling determinations.

REFERENCES FOR SECTION 6

1. Screening Methods for the Development of Air Toxics Emission Factors, EPA-450/4-91-021, U.S. Environmental Protection Agency, Research Triangle Park, NC, September 1991.

2. Test Methods for Evaluating Solid Waste, 3rd Ed., Vol. 1B: Laboratory Manual, Physical/Chemical Methods, EPA Report No. SW-846, U.S. Environmental Protection Agency, Washington, DC, November 1986.

3. Locating and Estimating Air Emissions from Sources of Styrene, Interim Report, EPA-450/4-91-029, U.S. Environmental Protection Agency, Research Triangle Park, NC, September 1991.

4. Telephone communication between Candace Blackley and Joan Bursey, Radian Corporation, Research Triangle Park, NC, March 26, 1991.

5. Code of Federal Regulations (Title 40, Part 60, Appendix A): "Method 18: Measurement of Gaseous Organic Compound Emissions by Gas Chromatography," 40 CFR 60, Appendix A.

6. Compendium of Methods for the Determination of Toxic Organic Compounds in Ambient Air, U.S. Environmental Protection Agency, Research Triangle Park, NC, May 1988.

7. NIOSH Manual of Analytical Methods, 3rd Ed., Volume 2, U.S. Department of Health, Education, and Welfare, National Institute for Occupational Safety and Health, Cincinnati, Ohio, 1987.

APPENDIX A

EXAMPLE PROCEDURES TO ESTIMATE METHYLENE CHLORIDE EMISSIONS

The purpose of this appendix is to present general example equations or calculation procedures and assumptions that may be used to estimate methylene chloride (MC) air emissions from differing sources. This appendix describes estimation procedures for three types of emission sources: (1) storage; (2) equipment leaks; and (3) secondary sources (wastewater).

The following sections describe example estimation procedures for emission sources.

SECTION 1 - STORAGE EXAMPLE

The following storage loss equations are presented for estimating fixed-roof breathing loss and fixed-roof working losses for a vertical tank storing methylene chloride. The following example equations are from the EPA Publication No. AP-42 emission factors for storage of organic liquids, Supplement E.[1] The purpose of their presentation is to alert the reader to the site-specific and chemical property considerations that are required for the estimation of MC emissions from storage. The equations presented are based on the following general points:

- Equations are for estimating standing storage and working losses for a vertical, fixed-roof storage tank.[1]
- Storage tank emissions from loading and unloading MC are accounted for in the working loss equation.

Example Equations

For a vertical, fixed-roof storage tank the following equations apply:[1]

$$L_T = L_S + L_W$$

where: $L_S = 365\ W_V V_V K_E K_S$

$L_W = 0.0010\ M_V P_{VA} Q K_N K_P$

L_T = total loss, lb/yr

L_S = standing storage loss, lb/yr

L_W = working loss, lb/yr

V_V = tank vapor space volume, ft^3

$$V_V = \frac{\Pi}{4\ D^2\ H_{VO}}$$

W_V = vapor density, lb/ft^3

$$W_V = \frac{M_V\ P\ VA}{RT_{LA}}$$

K_E = vapor space expansion factor, dimensionless

$$K_E = \frac{\Delta T_V}{T_{LA}} + \frac{\Delta P_V - \Delta P_B}{P_A - P_{VA}}$$

K_S = vented vapor space saturation factor, dimensionless

$$K_S = \frac{1}{1 + 0.053 P_{VA} H_{VO}}$$

D = diameter, ft

H_{VO} = vapor space outage, ft

M_V = molecular weight of vapor, lb/lb-mole

P_{VA} = vapor pressure at the daily average liquid surface temperature, psia

T_{LA} = daily average liquid surface temperature, °R

ΔT_V = daily vapor temperature range, °R

ΔP_V = daily vapor pressure range, psia

ΔP_B = breather vent pressure setting range, psi

P_A = atmospheric pressure, psia

Q = annual net throughput, lb/yr

K_N = working loss turnover factor, dimensionless

K_P = working loss product factor, dimensionless

Applicability Considerations:

- Equations and tables that further define these equation variables are presented in Supplement E of AP-42, "Storage of Organic Liquids."
- Emissions from horizontal tanks can be calculated by making adjustments to parameters in the fixed-roof equations. There are step-wise examples regarding how to proceed with adjustments in Supplement E of AP-42, "Storage of Organic Liquids."
- Supplement E also supplies the vapor pressure equation constants, molecular weight, boiling point at 1 atmosphere, liquid density at 60°F, and vapor pressure at varying temperatures for a variety of compounds (including MC).

SECTION 2 - EQUIPMENT LEAKS EXAMPLE

The following equipment leaks example is presented for estimating equipment leaks emissions based on VOC emission factors. This example presents the simplest of five methods delineated in the "Protocols" document, and should only be employed when other data are not available.[2] The purpose of its presentation is to alert the reader to the site-specific and chemical property considerations that are required for the estimation of MC emissions from equipment leaks. The estimation methodology is based on the following general points:

- Annual emission rates from equipment leaks in this example are based on the VOC emission factors (kg of VOC/hr) presented in Table A-1.[2]

- In applying the emission factors to equipment leaks, MC can be considered as a light liquid VOC because its vapor pressure is greater than 0.3 kPa. It can be assumed that MC is emitted like other VOC compounds.

- The annual MC emission rate from each equipment component type is the product of the appropriate emission factor, the percent MC handled by the equipment component, the maximum number of hours the equipment handles MC-laden material, and the number of equipment components that come in contact with the MC. The emission rates for each type of equipment component (i.e., pump seals, compressor seals, flanges, etc.) are summed to obtain a total equipment leak emission rate for each facility.

<u>Sample Calculation</u>

<u>Example Site-Specific Information</u>

- Three mechanical pump seals between mixing tank and filling lines. All are within a building.

  3 lines - 3 pump seals

- Hours of handling

  3 lines - 8 hr/day, 5 day/wk

- Amount of MC consumed = 496,944 lb/yr. Includes consumption for products and line flush.

- Amount of MC-based products packaged = 2,828,797 lb/yr

TABLE A-1. AVERAGE EMISSION FACTORS FOR PROCESS EQUIPMENT COMPONENTS USED TO ESTIMATE VOC EMISSIONS FROM EQUIPMENT LEAKS

Equipment Component (Emission Source)	Emission Factor[a,b] (kg VOC/hr-component)
Pumps - Liquid[b]	0.494
Compressors	0.228
Flanges	0.00083
Valves - Gas	0.0056
- Liquid[b]	0.0071
- Heavy Liquid	0.00023
Sampling Connections	0.0150
Open-Ended Lines	0.0017

[a] Emission factors were developed for VOC emitted from equipment components used in the synthetic chemical manufacturing industry (SOCMI).

[b] Liquid refers to light liquid and is defined as a petroleum liquid with a vapor pressure greater than the vapor pressure of kerosene.

Source: Reference 2.

Calculations

1. Hours of Handling = 8 hr/day · 5 day/wk · 52 wk/yr = 2,080 hr/yr
--assumes 52 wk/yr

2. Percent MC handled by the equipment components

$$\frac{496{,}944 \text{ lb MC/yr}}{2{,}828{,}797 \text{ lb MC-based product/yr}} \cdot 100 = 17.6 \text{ weight-percent}$$

- assumes the amount of MC used for cleanup and line flush is handled by the same component

- assumes concentration of MC is similar for all lines

3. Number of and emission factors for equipment components.

Number and type of equipment component = three mechanical pump seals.
Emission factor for pump seals = 0.494 kg MC/hr

4. Annual MC Emission Rate = Number of Components · Weight-percent of MC Handled

· Hours of Handling · Emission Factor

$$= (3)\ (0.176)\ (2{,}080 \text{ hr/yr})\ (0.0494 \text{ kg MC/hr}) \cdot \frac{1 \text{ Mg}}{1{,}000 \text{ kg}}$$

= 0.05 Mg MC/yr

SECTION 3 - SECONDARY WASTE STREAM EXAMPLE

The following secondary waste stream wastewater example calculation is presented as an example method for the estimation of MC emissions from wastewater streams. For a more detailed and accurate estimation methodology for MC emissions from wastewater streams, the reader is referred to the "Industrial Wastewater Volatile Organic Compound Emissions -- Background Information for Proposed Standards" document.[3] The purpose of this presentation is to alert the reader to some of the site-specific considerations required for the estimation of MC emissions from wastewater streams.

Example Method

- Secondary waste streams include wastewater streams, and organic-liquid or solid wastes.

- Emissions from wastewater streams can be calculated from the MC concentration, and the daily influent wastewater flowrate. In order to develop maximum emission estimates, it could be assumed that all of the MC in the wastewater is released to the atmosphere. In this example, it is assumed wastewater is generated 260 days per year.

$$\text{MC Emission Rate [Mg MC/yr]} = \frac{\text{Influent Wastewater Flowrate to Treatment or Storage [gal/day]} \cdot \text{Influent Concentration [}\mu\text{g MC/}\ell\text{]} \cdot [3.79\ \ell/\text{gal}]}{\frac{10^{12}\ \mu\text{g}}{1\ \text{Mg}} \cdot \frac{\text{yr}}{260\ \text{day}}}$$

- Emissions from organic-liquid or solid wastes can be calculated from the daily volume of waste generated and the weight percent of MC.

$$\text{Emission Rate [Mg MC/Yr] from Liquid or Solid Wastes} = \text{Daily Volume [gal/day]} \cdot \text{Density MC [Mg/gal]} \cdot \frac{260\ \text{days}}{\text{yr}} \cdot \text{MC Composition (wt-percent)}$$

REFERENCES

1. Compilation of Air Pollutant Emission Factors, Volume I: Stationary Point and Area Sources, Fourth Edition, AP-42, Supplement E, U.S. Environmental Protection Agency, Research Triangle Park, NC.

2. Protocols for Generating Unit-Specific Emission Estimates for Equipment Leaks of VOC and VHAP, EPA-450/3-88-010, U.S. Environmental Protection Agency, Research Triangle Park, NC, 1988.

3. Industrial Wastewater Volatile Organic Compound Emissions -- Background Information for BACT/LAER Determinations, EPA-450/3-90-004, March 1990, Chapter 4.

APPENDIX B

NATIONAL LIST OF PAINT STRIPPER FORMULATORS (JULY 1987)

NATIONAL LIST OF PAINT STRIPPER FORMULATORS (JULY 1987)

Company Name	Location
Alvin Products, Inc.	Worcester, MA
Amchem Products	Ambler, PA
American Niagara Corp.	Atlanta, GA
Ashland Chemical Co.	Columbus, OH
A-Z Midwest Factory Supply	Addison, IL
Beaver Alkali Products	Rochester, PA
Beck Chemicals, Inc.	Cleveland, OH
Behlen, H. & Bros., Inc.	Amsterdam, NY
Benco	Fontana, CA
Benco	Crossville, TN
Besway Chemical Systems, Inc.	Madison, TN
Cedtex Chemical	Southfield, MI
Certified Coating Pdts., Inc.	Los Angeles, CA
Chemclean Corporation	College Point, NY
Chemical Products Co., Inc.	Aberdeen, MD
Chemical Systems Research	West Bloomfield, MI
Consolidated Chemical	St. Louis, MO
Dap, Inc.	Tipp City, OH
Day, James B., & Co.	Carpentersville, IL
Delta Foremost Chemical Corp.	Memphis, TN
Diversey Wyandotte Corp.	Wyandotte, MI
Dober Chemical Corp.	Midlothian, IL
Dynaloy, Inc.	Hanover, NJ
Dytex Chemical Co., Inc.	Central Falls, RI
Ecco Chemicals, Inc.	Dallas, TX
Eldorado Chemicals	San Antonio, TX
Ensign Products	Cleveland, OH
Enterprise Co.	Wheeling, IL
Excelda Mfg. Co.	Ferndale, MI
Excelsior Varnish	Cleveland, OH
EZE Products	Greenville, SC

NATIONAL LIST OF PAINT STRIPPER FORMULATORS (JULY 1987) (Continued)

Company Name	Location
Formby's Inc.	Olive Branch, MS
FPNS	Henderson, KY
Fuller-O'Brien Paints	South San Francisco, CA
Gage Products	Ferndale, MI
Goodrich Products	Highlands, TX
Grow Group, Inc.	Detroit, MI
Grow Group, 2 (Nat'l Aerosol Pdts)	Los Angeles, CA
Harley Chemicals	Camden, NJ
Hexcel Chemicals	Lodi, NJ
Higley Chemicals	Dubuque, IA
Hillyard Chemicals	St. Joseph, MO
International Chemicals	Philadelphia, PA
International Paints	Union, NJ
International Paints	Houston, TX
Isochem Products	Lincoln, RI
J & S Chemicals	Macedonia, OH
Jasco Chemicals	Mountain View, CA
KCI Chemicals	La Porte, IN
Kerns United	Calumet City, IL
Key Chemicals	Philadelphia, PA
Klean Strip	Memphis, TN
Kwick Kleen Industries	Vincennes, IN
London Chemicals	Bensenville, IL
Lowe Brothers Co.	Cleveland, OH
Madison Bionics	Oak Brook, IL
Magnuson Products	Clifton, NJ
Man-Gill Co.	Cleveland, OH
Mantrose-Hauser Company	Attleboro, MA
McGean Rohco Inc.	Los Angeles, CA
Midland Lab	Des Moines, IA
Mitchell-Bradford Chemicals	Milford, CT

NATIONAL LIST OF PAINT STRIPPER FORMULATORS (JULY 1987) (Continued)

Company Name	Location
National Solvent Corp.	Medina, OH
NCH Corp.	Irving, TX
Nuvite Chemicals	Brooklyn, NY
Oakite Products	Metuchen, NJ
Oakite Products	City of Industry, CA
Oakite Products	Romulus, MI
Oakite Products	Houston, TX
Oxford Chemicals	Atlanta, GA
Par-Chem Products	Houston, TX
PBNS	Henderson, KY
Penetone Corporation	Tenafly, NJ
Pennwalt Corporation	Carson, CA
Pennwalt Corporation	Marion, OH
Petrocon Marine & Ind.	Brooklyn, NY
Pioneer Chemicals	West Point, OH
Prillaman Company	Martinsville, VA
Product-Sol Inc.	Birmingham, MI
Proko Industries	Dallas, TX
PyRock Chemicals	Long Island City, NY
Rap Products	Bay City, MI
Red Devil Paints	Mount Vernon, NY
Reliable Paste and Chemicals	Chicago, IL
Reliable Remover and Lacquer	Irvington, NJ
Savogran Company	Norwood, MA
Savogran Company	Addison, IL
Savogran Company	Los Angeles, CA
Sermac Industries	Altoona, PA
Sheldahl	Northfield, MN
Sherwin-Williams	Richmond, KY
Sherwin-Williams	Chicago, IL
Staples, H.F.	Merrimack, NH

NATIONAL LIST OF PAINT STRIPPER FORMULATORS (JULY 1987) (Concluded)

Company Name	Location
Star Bronze	Alliance, OH
Sterling-Clark-Lurton	Malden, MA
Strip-Tech	Hendersonville, TN
Stripping Products (BIX)	Old Hickory, TN
Stuart Radiator	Merced, CA
Sunshine Chemicals	West Hartford, CN
Texas Refinery	Fort Worth, TX
Texo Corp	Cincinnati, OH
Tower Chemicals	Palmer, PA
Tropical Industrial Coatings	Brunswick, OH
United Gilsonite	Scranton, PA
Urban Chemicals	Deerfield, IL
Watson-Standard	Harwick, PA
William M. Barr & Co.	Memphis, TN
Wilson-Imperial	Newark, NJ
Zep Manufacturing	Atlanta, GA

Source: Memorandum from E. Moretti, Radian Corporation, to the U.S. Environmental Protection Agency. Emission Estimates and Controls for Emissions from Paint Stripper Formulation Facilities (DRAFT). September 11, 1987.

APPENDIX C

NATIONAL LIST OF AEROSOL PACKAGERS

NATIONAL LIST OF AEROSOL PACKAGERS (JULY 1987)

	COMPANY	CITY	STATE	LATITUDE	LONGITUDE	PRODUCT CODE	REFERENCE
1	ACCRA PAC GROUP	ELKHARDT	IN	414100	855800	A,C,D,F,K	1,3,4
2	ADTECH DESIGN CO.	HORSHAM	PA	401100	750800	A,B,C,D,E,F,H,I	3
3	ADVANCE AEROSOL & CHEMICAL CO.	GENOA CITY	WI	423000	882000	A,C,D,E,F,K	3,6
4	AEROSOL RESEARCH LAB, INC.	HOLBROOK	MA	420900	710100	C,D,E,G	3
5	AEROSOL SERVICES CO., INC.	CITY OF INDUSTRY	CA	340200	1175600	A,B,C,D,G,H,K	3,4,5
6	AEROSOL SYSTEMS	MACEDONIA	OH	411900	813100	A,C,D,E,F	3,9
7	AEROSOL WEST	VENTURA	CA	341700	1191800	A,C,D,E,H	3
8	AEROTECH INDUSTRIES	GARLAND	TX	333000	943700	A,D,F,K	3
9	AERO-KING, INC.	BRONX	NY	405100	735400	C,D,E	3
10	AERVOE PACIFIC CO.	SAN LEANDRO	CA	374400	1220900	A,D,F,K	4,9
11	AIROSOL CO., INC.	NEODESHA	KS	372500	954100	A,D,C,E,G,I,K	3
12	ALTAWOOD INC.	GARDENA	CA	335300	1181800		5
13	AMERICAN AEROSOLS	HOLLAND	MI	424700	860700	A,D	3
14	AMERICAN NIAGARA CORP.	ATLANTA	GA	334500	842300		6
15	AMREP, INC.	MARIETTA	GA	335700	843300	A,C,D,E,K	3,6,9
16	AMWAY CORP.	ADA	MI	425900	853000		5
17	APOLLO INDUSTRIES, INC.	SMYRNA	GA	335300	843100		5
18	ATI, INC-1	TOTOWA	NJ	405400	741300		1,9
19	ATI, INC-2 (ARMSTRONG LABORATORIES DIV.)	WEST ROXBURY	MA	421700	710900	C,D,E,G,H	2,3,9
20	BARR CO.	NILES	IL	420200	874800	A,C,D,G,I	2,9
21	BARRETT CHEMICAL CO.	PHILADELPHIA	PA	395700	751000	A,D	3
22	BEECHAM HOME IMPROVEMENT	CLIFTON	NJ	405200	740900		5
23	BISSELL-1 (PENN CHAMP, INC)	EAST BUTLER	PA	405300	795100	A,C,G	8
24	BISSELL-2 (PENN CHAMP, INC)	RIVERSIDE	CA	335900	1172200	A,C,G	3,4
25	BORDEN (KRYLON DEPARTMENT)	COLUMBUS	OH	395800	830000	F	7
26	BOXAL METALS, INC.	FAIRLAWN	NJ	405600	740800		4
27	BOYLE-MIDWAY (AMERICAN HOME PRODUCTS)	CRANFORD	NJ	404000	741800		5,6
28	BRISTOL-MEYERS-1 (CLAIROL)	NEW YORK	NY	404500	735700	G	5
29	BRISTOL-MEYERS-2 (LENK CO.)	FRANKLIN	KY	364300	863500		1,9
30	BROUGHTON FOODS CO.	MARIETTA	OH	392500	812700		5
31	B&B AEROSOL PACKAGING CO., INC.	CHICAGO	IL	415200	873900	A,C,D,E,F,G,K	3
32	CAMIE-CAMPBELL, INC.	ST. LOUIS	MO	383700	901200		6,9
33	CARE LABORATORIES, INC.	COLLEGEVILLE	PA	401100	752800	A,D,E,F	3
34	CARSON CHEMICALS, INC.	NEW CASTLE	IN	395500	852200		5
35	CARTER-WALLACE, INC.	CRANBURY	NJ	401900	743100		5
36	CASE-MASON FILLING, INC.	JOPPA	MD	392600	762200	C,D,G,H,K	3,9
37	CHAMPION LABS (PYROIL CO.)	ALBION	IL	382300	880400	A,D	3,5
38	CHASE PRODUCTS CO.	MAYWOOD	IL	415400	875100		4,9
39	CHEM TECH, INC.	WILMINGTON	DE	394500	753400	A,D	5

NATIONAL LIST OF AEROSOL PACKAGERS (JULY 1987)

	COMPANY	CITY	STATE	LATITUDE	LONGITUDE	PRODUCT CODE	REFERENCE
40	CHEMSCOPE CORP.	ARLINGTON	TX	324400	970700	A,B,D,F	3,9
41	CHEMSICO, INC.	ST. LOUIS	MO	383700	901200	A,C,D,E,F,I	3,9
42	CHEMSPRAY, INC.	TOTOWA	NJ	405400	741300	A,C,D,G,H,I K	3
43	CHEMTRONICS	HAUPPAGE	NY	405000	731200	A,D,E,G,H	3,9
44	CHEM-PACKAGING CORP.	POMPANO BEACH	FL	261400	800800	A,C,D,E	3
45	CHEM-PAK, INC.	WINCHESTER	VA	391100	781000	A,B,D,F	3,6,9
46	CHEM-TECH, LTD.	DES MOINES	IA	413500	933700	E,I	3
47	CHESEBROUGH-PONDS, INC.	GREENWICH	CT				5
48	CLAPP INDUSTRIES CORP.	POTOMAC	IL	401800	874800	A,B,C,D,G,K	3
49	CLAYSON, INC. (GEM, INC.)	BYHALIA	MS	345200	894100	C,D,G	1,3,8,9
50	CLINE-BUCKNER, INC.	ARTESIA	CA	235200	1180500	C,D,E	3
51	CONNECTICUT AEROSOLS, INC.	MILFORD	CT	411400	730400		3,9
52	CONTACT INDUSTRIES, INC.	ELIZABETH	NJ	404000	741300	A,C,D,E,F,G,H,I	3,4,9
53	CONTINENTAL LABORATORIES, INC.	MADRID	IA	415300	934900	A,C,D,E,G,H,I	3
54	CPC-1 (PETERSON/PURITAN, INC.)	CUMBERLAND	RI	415700	712500	C,G	6
55	CPC-2 (PETERSON/PURITAN, INC.)	DANVILLE	IL	400800	873700	A,B,C,D,E,G,H,I,K	4,6
56	CPC-3 (PETERSON/PURITAN, INC.)	ENGLEWOOD CLIFFS	NJ	405300	735700		6
57	CRC CHEMICALS	WARMINSTER	PA	401200	750600		6
58	CREATIVE PRODUCTS CORP.	NEW HAVEN	CT	411800	755500	A,B,C,D,G,H,K	3
59	CROWN INDUSTRIAL PRODUCTS CO.	HEBRON	IL	422800	882600	D,F	3,6,9
60	CUSTOM-PAK PRODUCTS, INC.	GERMANTOWN	WI	431400	880600	D,F	3,5
61	C.S.A. LIMITED, INC.	HOUSTON	TX	294600	952200	A,C,D,E,G I	3
62	DELCOR LABORATORIES, INC.	E. STROUDSBERG	PA	410000	751100	G,H	3
63	DEMERT & DOUGHERTY, INC.	OAK BROOK	IL	415100	875800	A,C,D,G,K	1,3,9
64	DESOTO, INC.	DES PLAINES	IL	420300	875200		5
65	DEVOE & RAYNOLDS	LOUISVILLE	KY	381500	854600		5
66	DYMON, INC.	KANSAS CITY	KS	390700	943800	A,D,E	3,5
67	EMBALMERS SUPPLY CO.	WESTPORT	CT	410900	732200		5
68	ENTERPRISE SALES CO.	LOS ANGELES	CA	340400	1181500	D,E,K	3
69	ESKA PACKAGING CORP.	LAKEWOOD	NJ	400600	741300	A,D,E	3
70	EVEREADY PRODUCTS CORP.	CLEVELAND	OH	413000	814200	A,C,D,F,K	3,5
71	E.J. MCKERNAN CO.	GARDEN GROVE	CA	334700	1175500		4,8
72	FASSE PAINT CO., INC.	SHEBOYGAN FALLS	WI	434200	874500	F	3
73	FAULTLESS STARCH (BON AMI CO.)	KANSAS CITY	MO	390600	943500		5
74	FLUID PACKAGING CO., INC.	LAKEWOOD	NJ	400600	741300	G,H	4,9
75	FORREST PAINT CO.	EUGENE	OR	440500	1230400		5
76	FRANK ORLANDI, INC.	FLUSHING	NY	404500	734900	C,D,K	3
77	FRANKLIN OIL CORP. (RICOL DIV.)	CLEVELAND	OH	413000	814200	D	6,9
78	FULTON CO.	SUMTER	SC	335500	802100	F	3

NATIONAL LIST OF AEROSOL PACKAGERS (JULY 1987)

	COMPANY	CITY	STATE	LATITUDE	LONGITUDE	PRODUCT CODE	REFERENCE
80	GEMINI AEROSOLS, INC.	EL RENO	OK	353200	975700	A,F,	3
81	GEMINI LACQUERS	BEVERLY	MA	423300	705300		5
82	GEM, INC.	BYHALIA	MS	345200	884100	C,D,G	3
83	GENERAL PAINT	CARY	IL	421300	881400		5
84	GEORGIA PACIFIC CORP.	ATLANTA	GA	334500	842300		5
85	GILETTE CO.	ANDOVER	MA	424000	710800		6
86	GLIDDEN PAINTS	CLEVELAND	OH	413000	814200		6
87	GROW GROUP-1 (CELLO CORP.)	SANTA FE SPRINGS	CA	335700	1180400		5
88	GROW GROUP-2 (NATIONAL AEROSOL PRODUCTS)	CERRITOS	CA	335200	1180500	A,C,D,E,F,G,I,K	2,7,9
89	GUARDSMAN (AMERICAN AEROSOL INC.)	HOLLAND	MI	424700	860700		1,3,5,9
90	GUEST PACKAGING	RAHWAY	NJ	403700	741600	C,G	3
91	HOLT LLOYD (LPS PRODUCTS)	TUCKER	GA	335100	841300	D	6,7
92	HOWARD JOHNSON	NORTH QUINCY	MA	421700	710100		5
93	HYDROSOL	BURR RIDGE	IL	414700	875500	A,C,D,E,F,K	3,5
94	HYSAN CORP.	CHICAGO	IL	415200	873900	A,C,D,E,F,G,K	3
95	IKI MFG. CO.	EDGERTON	WI	425000	890400	A,C,D,E,G,I,H,K	1,3,9
96	ILLINOIS BRONZE PAINT CO.	LAKE ZURICH	IL	411200	880500	A,D,F,K	1,3,9
97	JET-AER CORP.	PATERSON	NJ	405500	741100	A,C,D,E,I,K	4
98	JL MFG.	GRANBURY	TX	332700	974700		3
99	KNIGHT OIL CORP.	JOHNSTOWN	NY	430000	742200	A,C,D,F	3,9
100	KOWALRAD PRODUCTS, INC.	PANDORA	OH	405700	835800	A,C,D,F	3
101	LAMAUR COMPANY	MINNEAPOLIS	MN	445900	931600		6
102	LAWRENCE-MCFADDEN CO.	PHILADELPHIA	PA	395700	751000		7,9
103	LAWSON CHEMICAL PRODUCTS CO.	TORRANCE	CA	335000	1181900	A,D,E,F	3
104	MARCY LABS	ADDISON	IL	415600	875900	A,G,I,K	1,3,9
105	MBL INDUSTRIES, INC.	SANTA ANA	CA	334600	1175200	A,C,D,E,K	3
106	METROVAL, INC. (EPIC INDUSTRIES, INC.)	METUCHEN	NJ	403200	742200		5,9
107	MIDCO PRODUCTS, CO	MARYLAND HEIGHTS	MO	384300	902600	A,C,D,E,F,I	3,9
108	MOBILE PAINT	THEODORE	AL	303300	881000		5
109	MOHAWK FINISHING	AMSTERDAM	NY	424600	741100		5
110	MOHAWK LABORATORIES	IRVING	TX	324900	965600		5
111	MORTON PHARMACEUTICALS, INC.	MEMPHIS	TN	350800	900300	A,C,D,F,I	3,9
112	NATIONWIDE INDUSTRIES	PANDORA	OH	405700	835800		8
113	NEW ENGLAND AEROSOL & PACKAGING CORP.	WOBURN	MA	422900	710900	A,C,D,E,F,G,K,I	3,5
114	NEW YORK BRONZE-1	ELIZABETH	NJ	404000	741300		5,6
115	NEW YORK BRONZE-2	TAYLOR	PA	412200	754300	F	6
116	NORTHEAST PACKAGING INC.	ORANGE	CT	411700	730200	A,C,D,E,F,G,H	3
117	NOXELL, INC.	BALTIMORE	MD	391700	763700		5
118	OAKITE PRODUCTS-1 (CLAIRE MFG. CO.)	ADDISON	IL	415600	875900	A,C,D,E	1,5,6,9

NATIONAL LIST OF AEROSOL PACKAGERS (JULY 1987)

	COMPANY	CITY	STATE	LATITUDE	LONGITUDE	PRODUCT CODE	REFERENCE
120	OAKITE PRODUCTS-3 (SPRAYWAY INC.)	ADDISON	IL	415600	875900		2,6,9
121	ORB INDUSTRIES, INC.	UPLAND	PA	395100	752300	D,E,F,K	3,9
122	PACTRA INDUSTRIES, INC.	UPLAND	CA	340600	1173900	F	7
123	PEERLESS TUBE CO.	BLOOMFIELD	NJ	404800	741200		4
124	PEL ASSOCIATES	NORTH BRANCH	NJ	403600	744100	A,C,D,G,H,K	3,5,9
125	PERCY HARMS CORP.	WHEELING	IL	420800	875500	F	3,6
126	PHARMASOL CORP.	RANDOLPH	MA	421000	710200	A,C,D,G,H,I,K	3
127	PIEDMONT LABS, INC.	GAINESVILLE	GA	341800	835000		3,5
128	PLASTI-KOTE CO.	MEDINA	OH	410800	815200	A,F	3,6
129	PLAZE AEROSOLS, INC.	ST. LOUIS	MO	383700	901200	A,C,D,E,F,G,I,J	4,9
130	PLOUGH, INC.	MEMPHIS	TN	350800	900300		5
131	PRESSPAK, INC.	SUGARLAND	TX	293700	953800	G,H	3
132	PRICE DRISCOLL CORP.	FARMINGDALE	NY	404400	732700		6,9
133	QUEST PACKAGING INC.	HOUSTON	TX	294600	952200		3
134	RAABE PAINT CO., INC.	WAUWATOSA	WI	430300	880000	A,F,D	3,5
135	RADIATOR SPECIALTY CO.	CHARLOTTE	NC	351300	805100		5
136	RALPH SHRADER	DETROIT	MI	422000	830300		5
137	RANDOLPH PRODUCTS CO.	CARLSTADT	NJ	405000	740600	F	3,4
138	RAWN COMPANY, INC.	SPOONER	WI	455000	915300		5
139	REALEX CORP.	BATON ROUGE	LA	302700	911100		5
140	REMPAK INDUSTRIES, INC.	CARTERET	NJ	403400	741300	A,C,D,E,G,H,I	3
141	RITE OFF, INC.	BAY SHORE	NY	404300	731500	A,C,D,E,K	4
142	RUDD PAINT & VARNISH CO.	SEATTLE	WA	473600	1222000		5
143	RUSTOLEUM CORP.	MUNDELEIN	IL	421600	880000		5
144	SC JOHNSON	RACINE	WI	424400	874800		6
145	SCHERING CORP.	ST. LOUIS	MO	383700	901200	H	3
146	SCOTTS LIQUID GOLD	DENVER	CO	394400	1045900		5
147	SECURE AMERICA CORP.	MARIETTA	GA	335700	843300	K	3
148	SECURITY EQUIPMENT CORP.	ST. LOUIS	MO	383700	901200	A,C,D,K,E	3
149	SEYMOUR OF SYCAMORE	SYCAMORE	IL	415900	884100		6
150	SHERWIN WILLIAMS-1 (DUPLI-COLOR)	ELK GROVE VILLAGE	IL	420100	875900		6
151	SHERWIN WILLIAMS-2 (SPRAYON PRODUCTS)	ANAHEIM	CA	335000	1175500		6
152	SHERWIN WILLIAMS-3 (SPRAYON PRODUCTS)	BEDFORD HEIGHTS	OH	412300	813000		2,6
153	SHIELD PACKAGING CO.	CANTON	MA	420900	710900	A,C,D,E,F,G,I,K	3
154	SHIELD PACKAGING OF CALIF.	CHINO	CA	340100	1174100	A,C,D,E,G,K,I	3
155	SHULTON, INC.	WAYNE	NJ				5
156	SOUTHLAND PAINT CO.	GAINESVILLE	TX	333800	970800	F	7
157	SPEER PRODUCTS-1 (PET CHEMICALS)	MIAMI SPRINGS	FL	254900	801800		5
158	SPEER PRODUCTS 2	MEMPHIS	TN	350800	900100	A,C,D,E,K,I	3,8

NATIONAL LIST OF AEROSOL PACKAGERS (JULY 1987)

	COMPANY	CITY	STATE	LATITUDE	LONGITUDE	PRODUCT CODE	REFERENCE
160	SPRAY PRODUCTS CORP.	NORRISTOWN	PA	400700	752100	A,D,E,F	3,9
161	SSP CHEMICAL CO., INC.	ROYERSFORD	PA	401100	753300	C,D,E,F	3
162	STALFORT CONSUMER PRODUCTS	HAVRE DE GRACE	MD	393300	760600	A,C,D,E	3
163	STANDARD BRANDS PAINT CO.	TORRANCE	CA	335000	1181900		1,9
164	STANHOME, INC.	WESTFIELD	MA	420700	724500	A,C,D,E,G	2,3,8,9
165	STAR CHEMICAL CO., INC.	HINSDALE	IL	414800	875600	F,D	3,5
166	STONERS INK CO.	QUARRYVILLE	PA	395400	761000		5
167	STROBEL PRODUCTS, INC.	LOUISVILLE	KY	381500	854600	A,C,D,F	3,9
168	SUN LABS-1 (SOUTHEAST PACKAGING CO.)	ATLANTA	GA	334500	842300	A,C,E,G,K	4,5
169	SUN LABS-2	CHATSWORTH	CA	341500	1183600	G	3,5
170	TALLEY INDUSTRIES (TIME-MIST INC.)	WATERBURY	CT	413300	730300	E	2,9
171	TECH LUBE	ISLIP	NY	404400	731300		6,9
172	TECHNAIR LABS, INC.	RAHWAY	NJ	403700	741600		4
173	TESTOR CORP	ROCKFORD	IL	411500	875800		5
174	THEOCHEM LABORATORIES, INC.	TAMPA	FL	275700	822700		8
175	3M CO.	ST. PAUL	MN	445700	930600	A,C,D,H	3,6
176	TRIMARK PACKAGING, INC.	ENNIS	TX	322000	963800		4
177	ULTRAMOTIVE CORP	BETHEL	VT	435000	723800	A,C,D,G,K,I	3,8
178	UNCOMMON CONGLOMERATES	ST. PAUL	MN	445700	930600		6
179	UNIPACK, INC.	PITTSBURGH	PA	402600	800100	A,C,D,E,F,G,H,K	3
180	UNIVERSAL SPECIALTY PACKAGING	ROSELLE	NJ	404000	741500	B,G,H,K	3,5
181	US AVIEX CO.	NILES	MI	415000	861500	A,C,D,E	3
182	US PACKAGING CORP	WHEELING	IL	420800	875500	A,C,D,F,K	3
183	VALJEAN CORP.	INDIAN HARBOUR BEACH	FL	280900	803600	C,E,G,H,I	3
184	VICTOR INDUSTRIES CORP	CHICO	CA	394400	1215000	A,B,C,D,E,F,G,H,I,K	3
185	WHITMIRE RESEARCH	ST. LOUIS	MO	383700	901200		6
186	WILLIAM BARR & CO.	MEMPHIS	TN	350800	900300		3
187	ZEP MANUFACTURING CO.	ATLANTA	GA	334500	842300	D,E	5,6,9
188	ZIP AEROSOL PRODUCTS	CANOGA PARK	CA	341200	1183500		6,9
189	ZOE CHEMICAL CO., INC.	NEW HYDE PARK	NY	404400	734100	C,D,E,I	3,4,8
190	ZYNOLYTE PRODUCTS CO.	COMPTON	CA	335400	1181300		7

NATIONAL LIST OF AEROSOL PACKAGERS (JULY 1987)

	COMPANY	CITY	STATE	LATITUDE	LONGITUDE	PRODUCT CODE	REFERENCE
PACKAGING FACILITIES WITH UNIDENTIFIED LOCATION							
191	AEROSOL SPECIALTIES						
192	AMERICAN JET-WAY						5
193	CESSCO, INC.						5
194	CHEMICAL PACKAGING SERVICES, INC.						5
195	CHEMI-COATINGS, INC.						5
196	C.F. BURGER						5
197	EMKO CO.						5
198	FO-MO PRODUCTS						5
199	IG-LO PRODUCTS CORP.						5
200	INTERDYNAMICS, INC.						5
201	JIM YORK CHEMICALS CO.						5
202	MAGNAFLUX CORP.						5
203	MAJOR PAINT						5
204	MILLER-STEPHENSON						5
205	NELSON PAINT						5
206	PETRO CHEMICAL PRODUCTS						5
207	SHIELD CHEMICAL CO.						5
208	SHIRLO, INC.						5
209	TECH SPRAY						5
210	TECHNICAL CHEMICALS						5
211	TRADCO						5
212	UNITED COATINGS						5
							5

PRODUCT CODE:

A = AUTOMOTIVE
B = FOOD
C = HOUSEHOLD
D = INDUSTRIAL
E = INSECTICIDE
F = PAINT
G = PERSONAL
H = PHARMACEUTICAL
I = VETERINARY
K = SPECIALTY

REFERENCE:

1 = STANDARD AND POOR'S REGISTER, 1980
2 = CORPORATE AFFILIATIONS, 1986
3 = AEROSOL AGE BUYER'S GUIDE, OCTOBER 1986
4 = AEROSOL AGE (1985 ISSUES)
5 = CSMA PRESSURIZED PRODUCTS SURVEY, 1985
6 = EPA MEMORANDUM, DOCUMENTATION OF TELEPHONE COMMUNICATIONS CONCERNING THE PACKAGING AND LOCALIZED LARGE-SCALE USERS OF AEROSOL PRODUCTS, PREPARED BY GARY BOCKOL, RADIAN CORPORATION, FEBRUARY 6,1987
7 = OCCUPATIONAL EXPOSURE AND ENVIRONMENTAL ASSESSMENT OF FOUR CHLORINATED SOLVENTS WHEN USED IN AEROSOLS, MARCH 28,1986
8 = CSMA VENDORS TO THE TRADE GUIDE, 1986
9 = THOMAS REGISTER, 1895

APPENDIX D

TRIS LIST OF PHARMACEUTICAL FACILITIES USING METHYLENE CHLORIDE

APPENDIX D

TRIS LIST OF PHARMACEUTICAL FACILITIES USING METHYLENE CHLORIDE

Treatments for Methylene Chloride (CAS 000075092)

SIC	TRIS ID	FACILITY NAME	WC	WTC	IC	STI	EFFIC	OD
283	00617BBTTCROADN	ABBOTT CHEMICALS INC.	A	P21	3		08500	N
283	00617BBTTCROADN	ABBOTT CHEMICALS INC.	A	B11	3		09500	N
283	00617BBTTCROADN	ABBOTT CHEMICALS INC.	A	A02	1		09800	N
283	00617MRCKSSTATE	MERCK SHARP & DOHME QUIMICA DE P.R.	L	F01	1	Y	00000	
283	00617MRCKSSTATE	MERCK SHARP & DOHME QUIMICA DE P.R.	A	A03		Y	10000	Y
283	00617MRCKSSTATE	MERCK SHARP & DOHME QUIMICA DE P.R.	A	A02	1		08000	N
283	00617MRCKSSTATE	MERCK SHARP & DOHME QUIMICA DE P.R.	A	A02	1		07100	N
283	00617MRCKSSTATE	MERCK SHARP & DOHME QUIMICA DE P.R.	A	A02	1		07250	N
283	00617PFZRPHIGHW	PFIZER PHARMACEUTICALS INC.	W	C11	2		00000	N
283	00617PFZRPHIGHW	PFIZER PHARMACEUTICALS INC.	A	A03	2		07300	N
283	00617PFZRPHIGHW	PFIZER PHARMACEUTICALS INC.	L	F11	2		10000	Y
283	00617PFZRPHIGHW	PFIZER PHARMACEUTICALS INC.	A	A02	2		10000	Y
283	00617THPJHHIGHW	UPJOHN MFG. CO.	A	A03	2		02000	N
283	00628LLLLY65THI	ELI LILLY INDUSTRIES INC.	A	P11	2		05400	Y
283	00628LLLLY65THI	ELI LILLY INDUSTRIES INC.		NA	NA		NA	N
283	00661SQBBMSTATE	SQUIBB MFG. INC.	A	A02	1		09000	N
283	00661SQBBMSTATE	SQUIBB MFG. INC.	A	A02	1		09500	N
283	00661SQBBMSTATE	SQUIBB MFG. INC.	A	A03	1		09500	N
283	00661SQBBMSTATE	SQUIBB MFG. INC.	A	A04	1		09500	N
283	00661SQBBMSTATE	SQUIBB MFG. INC.	A	A02	1	Y	00000	
283	00661SQBBMSTATE	SQUIBB MFG. INC.	A	A03		Y	09400	N
283	00661SQBBMSTATE	SQUIBB MFG. INC.	W	F01	3		10000	N
283	00661SQBBMSTATE	SQUIBB MFG. INC.	L	F01	1		10000	N
283	00661SQBBMSTATE	SQUIBB MFG. INC.	W	B11	3		09800	N
283	00661SQBBMSTATE	SQUIBB MFG. INC.	L	R11	1		09000	N
283	00661SQBBMSTATE	SQUIBB MFG. INC.	A	A02	1		09000	N
283	00661SQBBMSTATE	SQUIBB MFG. INC.	A	A02	1		09500	N
283	00661SQBBMSTATE	SQUIBB MFG. INC.	A	A03	1		09000	N
283	00661SQBBMSTATE	SQUIBB MFG. INC.	W	F01	4		10000	N
283	00661SQBBMSTATE	SQUIBB MFG. INC.	L	F01	1		10000	N
283	00661SQBBMSTATE	SQUIBB MFG. INC.	W	B11	3		09800	N
283	00671KYPHRPRIDC	SCHERING-PLOUGH PRODUCTS INC. KEY PHARMA	A	P12	1	Y	00000	Y
283	00671KYPHRPRIDC	SCHERING-PLOUGH PRODUCTS INC. KEY PHARMA	A	P21		Y	09800	Y
283	00671KYPHRPRIDC	SCHERING-PLOUGH PRODUCTS INC. KEY PHARMA	W	P42		Y	09800	Y
283	00671KYPHRPRIDC	SCHERING-PLOUGH PRODUCTS INC. KEY PHARMA	W	P19		Y	09800	Y
283	00671KYPHRPRIDC	SCHERING-PLOUGH PRODUCTS INC. KEY PHARMA	L	R13		Y	09800	Y
283	00671KYPHRPRIDC	SCHERING-PLOUGH PRODUCTS INC. KEY PHARMA	L	R11		Y	09900	Y
283	00671KYPHRPRIDC	SCHERING-PLOUGH PRODUCTS INC. KEY PHARMA	L	P01	2	Y	00000	N
283	00671KYPHRPRIDC	SCHERING-PLOUGH PRODUCTS INC. KEY PHARMA	L	B11	4	Y	09500	Y
283	00671KYPHRPRIDC	SCHERING-PLOUGH PRODUCTS INC. KEY PHARMA	L	P12		Y	00000	Y
283	00701RCHPRSTATE	ROCHE PRODUCTS INC.	A	P21	1		06000	N
283	00701RCHPRSTATE	ROCHE PRODUCTS INC.	W	P01	3	Y	00000	

Treatments for Methylene Chloride (CAS 000075092)

SIC	TRIS ID	FACILITY NAME	WC	WTC	IC	STI	EFFIC	OD
283	00701RCHPRSTATE	ROCHE PRODUCTS INC.	W	P11		Y	00000	
283	00701RCHPRSTATE	ROCHE PRODUCTS INC.	W	B11		Y	00000	
283	00701RCHPRSTATE	ROCHE PRODUCTS INC.	W	P13		Y	00000	
283	00701RCHPRSTATE	ROCHE PRODUCTS INC.	W	P11		Y	09100	Y
283	00701SCHRNROAD6	SCHERING INDUSTRIAL DEVELOPMENT CORP.		NA			00000	
283	00732BLCHMRDNO1	BILCHEM LTD.	A	A02	1		09000	N
283	00732BLCHMRDNO1	BILCHEM LTD.	W	C11	3		00000	N
283	06340PFZRNEASTE	PFIZER INC. GROTON SITE	G	A02	1		08500	N
283	06340PFZRNEASTE	PFIZER INC. GROTON SITE	G	A03	1		09200	N
283	06340PFZRNEASTE	PFIZER INC. GROTON SITE	W	R13	1		09900	N
283	06340PFZRNEASTE	PFIZER INC. GROTON SITE	G	A03	1		09200	N
283	06340PFZRNEASTE	PFIZER INC. GROTON SITE	W	R13	1		09900	N
283	06810DNBRY131WE	DANBURY PHARMACAL INC.		NA			00000	
283	07072RSYNCFOOTO	ARSYNCO INC.	W	P15	3	Y	00000	Y
283	07072RSYNCFOOTO	ARSYNCO INC.	W	C11		Y	00000	Y
283	07072RSYNCFOOTO	ARSYNCO INC.	W	P11		Y	00000	Y
283	07072RSYNCFOOTO	ARSYNCO INC.	W	P41			09985	Y
283	07080NTRLB650SO	NUTRO LABORATORIES INC.		NA			00000	
283	07083SCHRN1011M	SCHERING CORP.		NA			00000	
283	07083SCHRN1011M	SCHERING CORP.		NA			00000	
283	07110HFFMN340KI	HOFFMANN-LA ROCHE INC.	W	P01	2		00000	N
283	07110HFFMN340KI	HOFFMANN-LA ROCHE INC.	L	P09	1		00000	N
283	07110HFFMN340KI	HOFFMANN-LA ROCHE INC.	A	A02	1		08200	N
283	07110HFFMN340KI	HOFFMANN-LA ROCHE INC.	A	A02	1		07000	N
283	07110HFFMN340KI	HOFFMANN-LA ROCHE INC.	A	A02	1		09000	N
283	07110HFFMN340KI	HOFFMANN-LA ROCHE INC.	A	A02	1		07200	N
283	07110HFFMN340KI	HOFFMANN-LA ROCHE INC.	A	A02	1		09400	N
283	07110HFFMN340KI	HOFFMANN-LA ROCHE INC.	A	A07	1		00000	N
283	07110HFFMN340KI	HOFFMANN-LA ROCHE INC.	A	A02	1		08300	N
283	07110HFFMN340KI	HOFFMANN-LA ROCHE INC.	A	A02	1		09200	N
283	07110HFFMN340KI	HOFFMANN-LA ROCHE INC.	A	A02	1		06700	N
283	07110HFFMN340KI	HOFFMANN-LA ROCHE INC.	A	A02	1		00000	N
283	07110HFFMN340KI	HOFFMANN-LA ROCHE INC.	A	A07	1		09900	N
283	07110HFFMN340KI	HOFFMANN-LA ROCHE INC.	A	A03	1		09000	N
283	07110HFFMN340KI	HOFFMANN-LA ROCHE INC.	A	A02	1		04000	N
283	07424MDPHR101EM	AMIDE PHARMACEUTICAL INC.		NA	NA		NA	N
283	07463BCRFT12IND	BIOCRAFT LABORATORIES INC.		NA			00000	
283	07901CBGGY556MO	CIBA-GEIGY CORP. PHARMACEUTICALS DIV.	A	A03	1		09500	N
283	07901CBGGY556MO	CIBA-GEIGY CORP. PHARMACEUTICALS DIV.	A	A02	1		09500	Y
283	07901CBGGY556MO	CIBA-GEIGY CORP. PHARMACEUTICALS DIV.	A	A04	1		09700	Y
			A	A07	1		09900	Y

Treatments for Methylene Chloride (CAS 000075092)

SIC	TRIS ID	FACILITY NAME	WC	WTC	IC	STI	EFFIC	OD
283	07901CBGGY556MO	CIBA-GEIGY CORP. PHARMACEUTICALS DIV.	W	P01	3		10000	Y
283	07901CBGGY556MO	CIBA-GEIGY CORP. PHARMACEUTICALS DIV.	L	R19	1		01800	Y
283	07936SDMKL17WES	SIDMAK LABORATORIES INC.		NA			00000	
283	07936SNDZP59ROU	SANDOZ PHARMACEUTICALS CORP.		NA			00000	
283	08807MRCNCEASTM	AMERICAN CYANAMID CO. LEDERLE LABORATORI	A	A07	1		09000	N
283	08807MRCNCEASTM	AMERICAN CYANAMID CO. LEDERLE LABORATORI	W	C11	3		00000	N
283	08807MRCNCEASTM	AMERICAN CYANAMID CO. LEDERLE LABORATORI	A	A07	1		09000	N
283	08807MRCNCEASTM	AMERICAN CYANAMID CO. LEDERLE LABORATORI	W	C11	3		00000	N
283	08807MRCNCEASTM	AMERICAN CYANAMID CO. LEDERLE LABORATORI		NA	NA		NA	N
283	08854BCHML101PO	SMITHKLINE BEECHAM PHARMACEUTICALS		NA			00000	
283	08854BCHML101PO	SMITHKLINE BEECHAM PHARMACEUTICALS		NA			00000	
283	08876HCHSTRTE20	HOECHST CELANESE CORP. LIFE SCIENCES		NA	NA		NA	N
283	08902RSQBBONESQ	E.R. SQUIBB & SONS	A	A02	1		09500	N
283	08902RSQBBONESQ	E.R. SQUIBB & SONS	A	A02	1		09900	N
283	08902RSQBBONESQ	E.R. SQUIBB & SONS	A	A04	1		09500	Y
283	08902RSQBBONESQ	E.R. SQUIBB & SONS	A	A02	1		09500	N
283	10901CBGGYOLDMI	CIBA-GEIGY CORP. PHARMACEUTICALS DIV.		NA			00000	
283	10920PRPHR75BRE	PAR PHARMACEUTICAL INC.		NA			00000	
283	10965LDRLLNORTH	LEDERLE LABORATORIES	W	B11	3		04700	Y
283	11590TSHCN125ST	TISHCON CORP.						
283	12979YRSTL64MAP	AYERST LABORATORIES INC.	A	A02	1		09400	N
283	13221BRSTLTHOMP	BRISTOL-MYERS SQUIBB CO. INDUSTRIAL DIV.	A	A02	2		09850	N
283	13221BRSTLTHOMP	BRISTOL-MYERS SQUIBB CO. INDUSTRIAL DIV.	A	A02	2		06300	N
283	13221BRSTLTHOMP	BRISTOL-MYERS SQUIBB CO. INDUSTRIAL DIV.	A	A03	2		00000	N
283	13221BRSTLTHOMP	BRISTOL-MYERS SQUIBB CO. INDUSTRIAL DIV.	A	A02	2		09900	N
283	13221BRSTLTHOMP	BRISTOL-MYERS SQUIBB CO. INDUSTRIAL DIV.	W	C11	3		00000	N
283	13221BRSTLTHOMP	BRISTOL-MYERS SQUIBB CO. INDUSTRIAL DIV.	A	A03	2		08750	N
283	13221BRSTLTHOMP	BRISTOL-MYERS SQUIBB CO. INDUSTRIAL DIV.	A	A02	2		09900	N
283	13221BRSTLTHOMP	BRISTOL-MYERS SQUIBB CO. INDUSTRIAL DIV.	A	A02	2		09800	N
283	13221BRSTLTHOMP	BRISTOL-MYERS SQUIBB CO. INDUSTRIAL DIV.	A	A02	2		08000	N
283	13221BRSTLTHOMP	BRISTOL-MYERS SQUIBB CO. INDUSTRIAL DIV.	A	A04	2		09500	N
283	13221BRSTLTHOMP	BRISTOL-MYERS SQUIBB CO. INDUSTRIAL DIV.	W	C11	2		00000	N
283	14623PNNWL755JE	FISONS CORP.	A	A04	2		09600	Y
283	14623PNNWL755JE	FISONS CORP.	A	P42	1		10000	Y
283	14623PNNWL755JE	FISONS CORP.	W	P12	1		08500	Y
283	15147PNNXPEASTE	PENNEX PRODUCTS CO. INC.					NA	
283	17868MRCKC100AV	MERCK & CO. INC.	W	P01	3	Y	NA	
283	17868MRCKC100AV	MERCK & CO. INC.	W	C11		Y	NA	
283	17868MRCKC100AV	MERCK & CO. INC.	W	P11		Y	NA	
283	17868MRCKC100AV	MERCK & CO. INC.	W	B11		Y	NA	
283	17868MRCKC100AV	MERCK & CO. INC.	W	P11		Y	09997	Y

Treatments for Methylene Chloride (CAS 000075092)

SIC	TRIS ID	FACILITY NAME	WC	WTC	IC	STI	EFFIC	OD
283	17868MRCKC100AV	MERCK & CO. INC.	A	A02	2		08300	N
283	17868MRCKC100AV	MERCK & CO. INC.	A	A02	2		09100	N
283	19034RRRPH500VI	RHONE-POULENC RORER PHARMACEUT ICAL INC.		NA			00000	
283	19130SMTHK1500S	SMITHKLINE BEECHAM PHARMACEUTICALS	A	F71	2	Y	00000	
283	19130SMTHK1500S	SMITHKLINE BEECHAM PHARMACEUTICALS	A	A03		Y	08690	Y
283	19130SMTHK1500S	SMITHKLINE BEECHAM PHARMACEUTICALS		NA			00000	
283	19382FRMNT510EU	FERMTEC PRODUCTS INC.	W	B11	3		10000	N
283	19382FRMNT510EU	FERMTEC PRODUCTS INC.	W	B11	3		10000	N
283	19382WYTHY611EN	WYETH-AYERST LABORATORIES INC.	W	P01	3	Y	00000	
283	19382WYTHY611EN	WYETH-AYERST LABORATORIES INC.	W	B11		Y	00000	
283	19382WYTHY611EN	WYETH-AYERST LABORATORIES INC.	W	P14		Y	09500	N
283	19382WYTHY611EN	WYETH-AYERST LABORATORIES INC.	W	P01	3	Y	00000	
283	19382WYTHY611EN	WYETH-AYERST LABORATORIES INC.	W	B11		Y	00000	
283	19382WYTHY611EN	WYETH-AYERST LABORATORIES INC.	W	P14		Y	09000	N
283	19428SMTHK900RI	SMITHKLINE BEECHAM PHARMACEUTI CALS	W	F01	2		00100	Y
283	19428SMTHK900RI	SMITHKLINE BEECHAM PHARMACEUTI CALS	A	A02	1		00096	N
283	19428SMTHK900RI	SMITHKLINE BEECHAM PHARMACEUTI CALS	A	A03	2		00005	N
283	19428SMTHK900RI	SMITHKLINE BEECHAM PHARMACEUTI CALS		NA	NA		00000	N
283	19801NRMCF5000L	NORAMCO OF DELAWARE INC.		NA			00000	
283	21225KNSCL6118R	KANASCO LTD.		NA			NA	
283	21225KNSCL6118R	KANASCO LTD.		NA			00000	
283	23805LLBRT2999F	LEE LABORATORIES INC. & INFRACORP LTD.	W	P15	4	Y	NA	
283	23805LLBRT2999F	LEE LABORATORIES INC. & INFRACORP LTD.	W	C11		Y	00000	N
283	23805LLBRT2999F	LEE LABORATORIES INC. & INFRACORP LTD.	A	A03	3		00000	N
283	27597GLXNC1011N	GLAXO INC. TECHNICAL OPERATIONS DIV.	A	A02	1	Y	00000	
283	27597GLXNC1011N	GLAXO INC. TECHNICAL OPERATIONS DIV.		A04		Y	00100	N
283	27597GLXNC1011N	GLAXO INC. TECHNICAL OPERATIONS DIV.					00000	
283	27597GLXNC1011N	GLAXO INC. TECHNICAL OPERATIONS DIV.					00000	
283	27835BRRGHINTER	BURROUGHS WELLCOME CO.	W	C11	2		03200	N
283	27835BRRGHINTER	BURROUGHS WELLCOME CO.	A	A02	1		10000	N
283	27835BRRGHINTER	BURROUGHS WELLCOME CO.	L	R11	1		09000	N
283	27835BRRGHINTER	BURROUGHS WELLCOME CO.	L	F01	1	Y	NA	
283	27835BRRGHINTER	BURROUGHS WELLCOME CO.	A	A03		Y	10000	Y
283	31708MRCKC3517R	MERCK & CO. INC. FLINT RIVER PLANT	W	P01	2	Y	NA	
283	31708MRCKC3517R	MERCK & CO. INC. FLINT RIVER PLANT	W	C11		Y	NA	
283	31708MRCKC3517R	MERCK & CO. INC. FLINT RIVER PLANT	W	B11		Y	NA	
283	31708MRCKC3517R	MERCK & CO. INC. FLINT RIVER PLANT	W	P11		Y	NA	
283	31708MRCKC3517R	MERCK & CO. INC. FLINT RIVER PLANT	S	P13		Y	09500	N
283	37620BCHMLINDUS	BEECHAM LABORATORIES	A	A03	1		00140	N
283	37620BCHMLINDUS	BEECHAM LABORATORIES	W	A03	1		09860	N
283	45215MRRLL2110E	MERRELL DOW PHARMACEUTICALS INC.	A	A03	2		00000	N

Treatments for Methylene Chloride (CAS 000075092)

SIC	TRIS ID	FACILITY NAME	WC	WTC	IC	STI	EFFIC	OD
283	45215MRRLL2110E	MERRELL DOW PHARMACEUTICALS INC.		NA			00000	
283	46285LLLLY1555K	ELI LILLY & CO. LILLY INDUSTRIAL CENTER	A	A02	1		07500	N
283	46285LLLLY1555K	ELI LILLY & CO. LILLY INDUSTRIAL CENTER		NA	NA		NA	N
283	46285LLLLYLILLY	ELI LILLY & CO. LILLY CORPORATE CENTER	A	A07	3		10000	N
283	46285LLLLYLILLY	ELI LILLY & CO. LILLY CORPORATE CENTER	A	A03	3		05000	N
283	46285LLLLYLILLY	ELI LILLY & CO. LILLY CORPORATE CENTER	L	R12	1	Y	NA	N
283	46285LLLLYLILLY	ELI LILLY & CO. LILLY CORPORATE CENTER	A	A02	NA	Y	10000	N
283	46285LLLLYLILLY	ELI LILLY & CO. LILLY CORPORATE CENTER		NA	NA		NA	N
283	47721BRSTL2404P	MEAD JOHNSON & CO. EVANSVILLE PLANT	A	A03	2		09000	N
283	47721BRSTL2404P	MEAD JOHNSON & CO. EVANSVILLE PLANT		NA			00000	
283	47842LLLLYSTATE	ELI LILLY & CO. CLINTON LABORATORIES	W	F01	1		10000	N
283	47842LLLLYSTATE	ELI LILLY & CO. CLINTON LABORATORIES	L	F01	1		10000	N
283	47842LLLLYSTATE	ELI LILLY & CO. CLINTON LABORATORIES	A	F71	1		10000	N
283	47842LLLLYSTATE	ELI LILLY & CO. CLINTON LABORATORIES	A	A02	1		08500	N
283	47842LLLLYSTATE	ELI LILLY & CO. CLINTON LABORATORIES	L	R11	1		07300	Y
283	47842LLLLYSTATE	ELI LILLY & CO. CLINTON LABORATORIES		NA	NA		NA	N
283	47905LLLLYLILLY	ELI LILLY & CO. TIPPECANOE LABORATORIES	A	A02	1		08500	N
283	47905LLLLYLILLY	ELI LILLY & CO. TIPPECANOE LABORATORIES	A	A03	1		01000	N
283	47905LLLLYLILLY	ELI LILLY & CO. TIPPECANOE LABORATORIES	W	B11	3		00000	N
283	47905LLLLYLILLY	ELI LILLY & CO. TIPPECANOE LABORATORIES	W	C11	3		00000	N
283	47905LLLLYLILLY	ELI LILLY & CO. TIPPECANOE LABORATORIES	L	F01	1		09900	N
283	47905LLLLYLILLY	ELI LILLY & CO. TIPPECANOE LABORATORIES	L	P01	1		00000	N
283	47905LLLLYLILLY	ELI LILLY & CO. TIPPECANOE LABORATORIES	W	P01	3		00000	N
283	47905LLLLYLILLY	ELI LILLY & CO. TIPPECANOE LABORATORIES	W	P11	3		00500	N
283	47905LLLLYLILLY	ELI LILLY & CO. TIPPECANOE LABORATORIES	S	P13	3		01800	N
283	47905LLLLYLILLY	ELI LILLY & CO. TIPPECANOE LABORATORIES	W	F01	2		09900	N
283	47905LLLLYLILLY	ELI LILLY & CO. TIPPECANOE LABORATORIES	W	P41	3		09000	N
283	47905LLLLYLILLY	ELI LILLY & CO. TIPPECANOE LABORATORIES	W	P42	1		09000	N
283	47905LLLLYLILLY	ELI LILLY & CO. TIPPECANOE LABORATORIES	L	R13	1		09000	N
283	47905LLLLYLILLY	ELI LILLY & CO. TIPPECANOE LABORATORIES	A	P21	1		08000	N
283	47905LLLLYLILLY	ELI LILLY & CO. TIPPECANOE LABORATORIES	L	C11	1		00000	N
283	49001THPJH7171P	UPJOHN CO. PRODUCTION FACILITY		NA	NA		NA	N
283	49001THPJH7171P	UPJOHN CO. PRODUCTION FACILITY	L	R13	1		08500	Y
283	49001THPJH7171P	UPJOHN CO. PRODUCTION FACILITY	L	R11	1		08800	Y
283	49001THPJH7171P	UPJOHN CO. PRODUCTION FACILITY	L	F19	2		09999	N
283	49001THPJH7171P	UPJOHN CO. PRODUCTION FACILITY	A	A02	1		08000	N
283	49001THPJH7171P	UPJOHN CO. PRODUCTION FACILITY	A	A02	1	Y	NA	N
283	49001THPJH7171P	UPJOHN CO. PRODUCTION FACILITY	A	A03	NA	Y	09900	N
283	49001THPJH7171P	UPJOHN CO. PRODUCTION FACILITY		NA	NA		NA	N
283	49001THPJH7171P	UPJOHN CO. PRODUCTION FACILITY	A	A02	1		08000	N
283	49001THPJH7171P	UPJOHN CO. PRODUCTION FACILITY		NA	NA		NA	N

Treatments for Methylene Chloride (CAS 000075092)

SIC	TRIS ID	FACILITY NAME	WC	WTC	IC	STI	EFFIC	OD
283	49424PRKDV188HO	PARKE-DAVIS DIV. OF WARNER-LAMBERT CO.	W	P01	3		00000	N
283	49424PRKDV188HO	PARKE-DAVIS DIV. OF WARNER-LAMBERT CO.	S	P12	3		00000	N
283	49424PRKDV188HO	PARKE-DAVIS DIV. OF WARNER-LAMBERT CO.	A	F71	1		09999	Y
283	49424PRKDV188HO	PARKE-DAVIS DIV. OF WARNER-LAMBERT CO.	L	R11	1		09500	N
283	55447PSHRS14905	UPSHER-SMITH LABORATORIES INC.		NA			00000	
283	56623RDRWL210MA	REID-ROWELL INC.		NA			00000	
283	60064BBTTL1400N	ABBOTT LABORATORIES	W	B11	2		09930	Y
283	60064BBTTL1400N	ABBOTT LABORATORIES	A	A02	1		09500	N
283	60077GDSRL4901S	G. D. SEARLE & CO.	A	A02	1		07000	N
283	60077GDSRL4901S	G. D. SEARLE & CO.		NA	NA		NA	N
283	60915RMRPHRT50A	ARMOUR PHARMACEUTICAL CO.		NA			00000	
283	63141KVPHR2303S	KV PHARMACEUTICAL CO.	A	A07	3		00000	Y
283	64137MRNLBMARIO	MARION MERRELL DOW INC. MARION PARK		NA			00000	
283	65807SYNTX2460W	SYNTEX AGRIBUSINESS INC.	W	P41	3		08000	N
283	65807SYNTX2460W	SYNTEX AGRIBUSINESS INC.	A	A03	2		00300	N
283	68521NRDNL601WE	SMITHKLINE BEECHAM ANIMAL HEALTH		NA			00000	
283	80020CRDLB2555W	GENEVA PHARMACEUTICALS INC.		NA			00000	
283	80301HSRCH4750N	HAUSER CHEMICAL RESEARCH INC.	L	R11	1		09600	Y
283	80301SYNTX2075N	SYNTEX CHEMICALS INC.	A	A03	2	Y	NA	N
283	80301SYNTX2075N	SYNTEX CHEMICALS INC.	A	A04	NA	Y	00500	N
283	80301SYNTX2075N	SYNTEX CHEMICALS INC.	A	A04	2		00000	N
283	80301SYNTX2075N	SYNTEX CHEMICALS INC.	W	B11	2		09600	N
283	80301SYNTX2075N	SYNTEX CHEMICALS INC.		NA	NA		NA	N
283	85260NTRLL14810	NATURALLY VITAMIN SUPPLEMENTS INC.		NA			00000	
283	90505BCHMN3132K	BACHEM INC.		NA			00000	
283	91324MRKR 19901	3M RIKER		NA			00000	
283	92121MLTPL3550G	MULTIPLE PEPTIDE SYSTEMS L.P.	L	R11	1		08300	N
283	92713NBLCN17802	ANABOLIC INC.	A	P41	2		00130	N
283	94303LZCRP2575H	ALZA CORP.	A	F71	1	Y	NA	
283	94303LZCRP2575H	ALZA CORP.	A	A03		Y	10000	Y
283	95688LZCRP700EU	ALZA CORP.	A	A02	1		09300	Y

---------- SIC=283 ----------

SIC	TRIS ID	FACILITY NAME	LOCATION	PARENT COMPANY
283	85260NTRLL14810	NATURALLY VITAMIN SUPPLEMENTS INC.	SCOTTSDALE, AZ	MARLYN CO.
283	37620BCHMLINDUS	BEECHAM LABORATORIES	BRISTOL, TN	SMITHKLINE BEECHAM PHARMACEUTI
283	14623PNNWL755JE	FISONS CORP.	ROCHESTER, NY	FISONS CORP.
283	15147PNNXPEASTE	PENNEX PRODUCTS CO. INC.	VERONA, PA	NV MEDICOPHARMA
283	06810DNBRY131WE	DANBURY PHARMACAL INC.	DANBURY, CT	HENRY SCHEIN INC.
283	80020CRDLB2555W	GENEVA PHARMACEUTICALS INC.	BROOMFIELD, CO	CIBA GEIGY CORP.
283	19034RRRPH500VI	RHONE-POULENC RORER PHARMACEUT ICAL INC.	FORT WASHINGTON, PA	RHONE-POULENC RORER INC.
283	31708MRCKC3517R	MERCK & CO. INC. FLINT RIVER PLANT	ALBANY, GA	MERCK & CO. INC.
283	23805LLBRT2999F	LEE LABORATORIES INC. & INFRACORP LTD.	PETERSBURG, VA	BOEHRINGER INGELHEIM & A. H. R
283	07080NTRLB650SO	NUTRO LABORATORIES INC.	SOUTH PLAINFIELD, NJ	NA
283	07936SNDZP59ROU	SANDOZ PHARMACEUTICALS CORP.	EAST HANOVER, NJ	SANDOZ CORP.
283	00617MRCKSSTATE	MERCK SHARP & DOHME QUIMICA DE P.R.	BARCELONETA, PR	MERCK & CO. INC.
283	55447PSHRS14905	UPSHER-SMITH LABORATORIES INC.	MINNEAPOLIS, MN	NA
283	12979YRSTL64MAP	AYERST LABORATORIES INC.	ROUSES POINT, NY	AMERICAN HOME PRODUCTS CORP.

ONSITE	FUGITIVE EMISSIONS	FC	STACK EMISSIONS	SC	TOTAL EMISSIONS
02	0	O	100	O	100
04	0		184028	M	184028
04	250	O	2016	O	2266
	1148	C	140000	C	141148
03	250	O	162000	C	162250
03	0		14412	C	14412
03	0		31367	C	31367
06	250000	O	1200000	O	1450000
04	51	O	7900	O	7951
03	0		30000	C	30000
04	93	O	2250	O	2343
04	650	M	270	O	920
03	0		120000	C	120000
04	250	O	16000	E	16250

---------- SIC=283 ----------
(continued)

SIC	TRIS ID	FACILITY NAME	LOCATION	PARENT COMPANY
283	17868MRCKC100AV	MERCK & CO. INC.	RIVERSIDE, PA	MERCK & CO. INC.
283	06340PFZRNEASTE	PFIZER INC. GROTON SITE	GROTON, CT	PFIZER INC.
283	07936SDMKL17WES	SIDMAK LABORATORIES INC.	EAST HANOVER, NJ	NA
283	10920PRPHR75BRE	PAR PHARMACEUTICAL INC.	CONGERS, NY	NA
283	64137MRNLBMARIO	MARION MERRELL DOW INC. MARION PARK	KANSAS CITY, MO	DOW CHEMICAL CO.
283	90505BCHMN3132K	BACHEM INC.	TORRANCE, CA	NA
283	68521NRDNL601WE	SMITHKLINE BEECHAM ANIMAL HEALTH	LINCOLN, NE	SMITHKLINE BEECHAM CORP.
283	60915RMRPHRT50A	ARMOUR PHARMACEUTICAL CO.	BRADLEY, IL	RHONE-POULENC RORER INC.
283	00701SCHRNROAD6	SCHERING INDUSTRIAL DEVELOPMENT CORP.	MANATI, PR	SCHERING INDUSTRIAL DEVELOPMEN
283	07424MDPHR101EM	AMIDE PHARMACEUTICAL INC.	LITTLE FALLS, NJ	NA
283	65807SYNTX2460W	SYNTEX AGRIBUSINESS INC.	SPRINGFIELD, MO	SYNTEX USA INC.
283	00617THPJHHIGHW	UPJOHN MFG. CO.	BARCELONETA, PR	UPJOHN CO.
283	19382FRMNT510EU	FERMTEC PRODUCTS INC.	WEST CHESTER, PA	BURNS PHILP & CO. LTD.

ONSITE	FUGITIVE EMISSIONS	FC	STACK EMISSIONS	SC	TOTAL EMISSIONS
05	200000	O	110000	O	310000
05	17000	M	8500	O	25500
03	4395	C	171398	C	175793
03	200	O	1300	C	1500
04	750	E	58000	C	58750
03	5	O	250	O	255
04	5200	O	1080500	C	1085700
04	0		9600	O	9600
04	250	O	27558	C	27808
03	2192	O	19730	O	21922
05	31243	E	821777	C	853020
06	4995	E	584777	E	589772
04	0		250	E	250

---------- SIC=283 ----------
(continued)

SIC	TRIS ID	FACILITY NAME	LOCATION	PARENT COMPANY
283	10901CBGGYOLDMI	CIBA-GEIGY CORP. PHARMACEUTICALS DIV.	SUFFERN, NY	CIBA-GEIGY CORP. USA
283	27835BRRGHINTER	BURROUGHS WELLCOME CO.	GREENVILLE, NC	WELLCOME FOUNDATION LTD.
283	07083SCHRN1011M	SCHERING CORP.	UNION, NJ	SCHERING-PLOUGH CORP.
283	00617PFZRPHIGHW	PFIZER PHARMACEUTICALS INC.	BARCELONETA, PR	PFIZER INC.
283	80301HSRCH4750N	HAUSER CHEMICAL RESEARCH INC.	BOULDER, CO	NA
283	27597GLXNC1011N	GLAXO INC. TECHNICAL OPERATIONS DIV.	ZEBULON, NC	GLAXO ENTERPRISES INC.
283	94303LZCRP2575H	ALZA CORP.	PALO ALTO, CA	NA
283	45215MRRLL2110E	MERRELL DOW PHARMACEUTICALS INC.	CINCINNATI, OH	MARION MERRELL DOW INC.
283	80301SYNTX2075N	SYNTEX CHEMICALS INC.	BOULDER, CO	SYNTEX (USA) INC.
283	19382WYTHY611EN	WYETH-AYERST LABORATORIES INC.	WEST CHESTER, PA	AMERICAN HOME PRODUCTS
283	07463BCRFT12IND	BIOCRAFT LABORATORIES INC.	WALDWICK, NJ	BIOCRAFT LABORATORIES INC.
283	08902RSQBBONESQ	E.R. SQUIBB & SONS	NORTH BRUNSWICK, NJ	BRISTOL-MYERS SQUIBB CO.
283	47721BRSTL2404P	MEAD JOHNSON & CO. EVANSVILLE PLANT	EVANSVILLE, IN	BRISTOL-MYERS SQUIBB CO.

ONSITE	FUGITIVE EMISSIONS	FC	STACK EMISSIONS	SC	TOTAL EMISSIONS
03	2974	O	14978	C	17952
04	13000	C	433000	C	446000
04	0	O	76263	O	76263
05	24000	O	37100	O	61100
04	61400	CM	0		61400
04	2290	O	155334	C	157624
04	250	O	3434	O	3684
04	400	O	25000	C	25400
05	250	O	61300	O	61550
05	4800	O	28400	O	33200
04	2514	O	6694	O	9208
04	4100	O	4100	O	8200
04	250	O	51300	C	51550

---------- SIC=283 ----------
(continued)

SIC	TRIS ID	FACILITY NAME	LOCATION	PARENT COMPANY
283	00617BBTTCROADN	ABBOTT CHEMICALS INC.	BARCELONETA, PR	ABBOTT LABORATORIES INC.
283	49424PRKDV188HO	PARKE-DAVIS DIV. OF WARNER-LAMBERT CO.	HOLLAND, MI	WARNER LAMBERT CO.
283	07901CBGGY556MO	CIBA-GEIGY CORP. PHARMACEUTICALS DIV.	SUMMIT, NJ	CIBA-GEIGY CORP.
283	13221BRSTLTHOMP	BRISTOL-MYERS SQUIBB CO. INDUSTRIAL DIV.	SYRACUSE, NY	BRISTOL-MYERS SQUIBB CO.
283	10965LDRLLNORTH	LEDERLE LABORATORIES	PEARL RIVER, NY	AMERICAN CYANAMID CO.
283	60064BBTTL1400N	ABBOTT LABORATORIES	NORTH CHICAGO, IL	ABBOTT LABORATORIES INC.
283	00701RCHPRSTATE	ROCHE PRODUCTS INC.	MANATI, PR	HOFFMANN-LA ROCHE LTD.
283	21225KNSCL6118R	KANASCO LTD.	BALTIMORE, MD	
283	56623RDRWL210MA	REID-ROWELL INC.	BAUDETTE, MN	SOLVAY PHARMACEUTICAL INC.
283	19801NRMCF5000L	NORAMCO OF DELAWARE INC.	WILMINGTON, DE	JOHNSON & JOHNSON
283	00671KYPHRPRIDC	SCHERING-PLOUGH PRODUCTS INC. KEY PHARMA	LAS PIEDRAS, PR	SCHERING CORP.
283	00661SQBBMSTATE	SQUIBB MFG. INC.	HUMACAO, PR	BRISTOL-MYERS SQUIBB CO.
283	07072RSYNCFOOTO	ARSYNCO INC.	CARLSTADT, NJ	ACETO CHEMICAL CO.

ONSITE	FUGITIVE EMISSIONS	FC	STACK EMISSIONS	SC	TOTAL EMISSIONS
05	784762	C	1741170	C	2525932
04	1100	O	5	O	1105
05	0	C	13400	C	13400
05	190000	C	110000	E	300000
04	0	O	3300	O	3300
05	7700	O	117550	O	125250
04	4914	O	13608	O	18522
05	1500	O	1400	O	2900
04	0		100117	C	100117
05	11362	E	19815	E	31177
05	41000	E	54800	O	95800
05	95640	O	93260	O	188900
04	108778	O	16821	O	125599

---------- SIC=283 ----------
(continued)

SIC	TRIS ID	FACILITY NAME	LOCATION	PARENT COMPANY
283	08807MRCNCEASTM	AMERICAN CYANAMID CO. LEDERLE LABORATORI	BRIDGEWATER, NJ	AMERICAN CYANAMID CO.
283	11590TSHCN125ST	TISHCON CORP.	WESTBURY, NY	TISHCON CORP.
283	91324MRKR 19901	3M RIKER	NORTHRIDGE, CA	3M CO.
283	47905LLLLYLILLY	ELI LILLY & CO. TIPPECANOE LABORATORIES	SHADELAND, IN	ELI LILLY &. CO.
283	19428SMTHK900RI	SMITHKLINE BEECHAM PHARMACEUTI CALS	CONSHOHOCKEN, PA	SMITHKLINE BEECHAM PHARMACEUTI
283	60077GDSRL4901S	G. D. SEARLE & CO.	SKOKIE, IL	MONSANTO CO.
283	00628LLLLY65THI	ELI LILLY INDUSTRIES INC.	CAROLINA, PR	ELI LILLY &. CO.
283	08807MRCNCEASTM	AMERICAN CYANAMID CO. LEDERLE LABORATORI	BRIDGEWATER, NJ	AMERICAN CYANAMID CO.
283	07110HFFMN340KI	HOFFMANN-LA ROCHE INC.	NUTLEY, NJ	ROCHE HOLDINGS INC.
283	49001THPJH7171P	UPJOHN CO. PRODUCTION FACILITY	PORTAGE, MI	UPJOHN CO.
283	46285LLLLYLILLY	ELI LILLY & CO. LILLY CORPORATE CENTER	INDIANAPOLIS, IN	ELI LILLY & CO.
283	46285LLLLY1555K	ELI LILLY & CO. LILLY INDUSTRIAL CENTER	INDIANAPOLIS, IN	ELI LILLY & CO.
283	47842LLLLYSTATE	ELI LILLY & CO. CLINTON LABORATORIES	CLINTON, IN	ELI LILLY & CO.

ONSITE	FUGITIVE EMISSIONS	FC	STACK EMISSIONS	SC	TOTAL EMISSIONS
04	343	O	27345	O	27688
03	0		190971	C	190971
03	1560	C	15600	C	17160
06	180000	O	530000	O	710000
04	250	E	1700	O	1950
04	3200	O	1200	O	4400
03	18000	O	17000	C	35000
04	597	O	28905	O	29502
05	12369	O	6372	O	18741
06	662600	E	2302300	O	2964900
03	6500	C	1200	C	7700
04	11000	O	200000	O	211000
06	1600000	C	810000	O	2410000

---------- SIC=283 ----------
(continued)

SIC	TRIS ID	FACILITY NAME
283	95688LZCRP700EU	ALZA CORP.
283	19130SMTHK1500S	SMITHKLINE BEECHAM PHARMACEUTICALS
283	08854BCHML101PO	SMITHKLINE BEECHAM PHARMACEUTICALS
283	92121MLTPL3550G	MULTIPLE PEPTIDE SYSTEMS L.P.
283	92713NBLCN17802	ANABOLIC INC.
283	63141KVPHR2303S	KV PHARMACEUTICAL CO.
283	00732BLCHMRDNO1	BILCHEM LTD.
283	08876HCHSTRTE20	HOECHST CELANESE CORP. LIFE SCIENCES

SIC LOCATION	PARENT COMPANY
VACAVILLE, CA	NA
PHILADELPHIA, PA	SMITHKLINE BEECHAM CORP.
PISCATAWAY, NJ	SMITHKLINE BEECHMAN CORP.
SAN DIEGO, CA	NA
IRVINE, CA	NA
SAINT LOUIS, MO	NA
PONCE, PR	BOHERINGER INGELHEIM INC.
SOMERVILLE, NJ	HOECHST CELANESE CORP.

ONSITE	FUGITIVE EMISSIONS	FC	STACK EMISSIONS	SC	TOTAL EMISSIONS
05	3563	O	24693	O	28256
04	5	O	55000	C	55005
05	750	O	5100	E	5850
03	750	O	0		750
04	250	O	14900	M	15150
04	0		299733	C	299733
04	1410	O	27229	O	28639
03	250	C	0	NA	250
	4385303		12545380		16930683

Key:

SIC = Standard Industrial Classification

TRIS = Toxic Chemical Release Inventory System

CAS = Chemical Abstract Service Registry Number

WC = General Wastestream type; where

A = Gaseous (gases, vapors, airborne particulates),
W = Wastewater (aqueous waste),
L = Liquid Waste (non-aqueous waste), and
S = Solid Waste (including sludges and slurries).

WTC = Waste Treatment Code; as indicated by the following.

Air Emissions Treatment

A01 Flare
A02 Condenser
A03 Scrubber
A04 Absorber
A05 Electrostatic Precipitator
A06 Mechanical Separation
A07 Other Air Emission Treatment

Biological Treatment

B11 Biological Treatment -- Aerobic
B21 Biological Treatment -- Anaerobic
B31 Biological Treatment -- Facultative
B99 Biological Treatment -- Other

Chemical Treatment

C01 Chemical Precipitation -- Lime or Sodium Hydroxide
C02 Chemical Precipitation -- Sulfide
C09 Chemical Precipitation -- Other
C11 Neutralization
C21 Chromium Reduction
C31 Complexed Metals Treatment (other than pH Adjustment)
C41 Cyanide Oxidation -- Alkaline Chlorination
C42 Cyanide Oxidation -- Electrochemical
C43 Cyanide Oxidation -- Other
C44 General Oxidation (including Disinfection) -- Chlorination
C45 General Oxidation (including Disinfection) -- Ozonation
C46 General Oxidation (including Disinfection) -- Other
C99 Other Chemical Treatment

Recovery/Reuse

R01 Reuse as Fuel -- Industrial Kiln
R02 Reuse as Fuel -- Industrial Furnace
R03 Reuse as Fuel -- Boiler
R04 Reuse as Fuel -- Fuel Blending
R09 Reuse as Fuel -- Other
R11 Solvents/Organics Recovery -- Batch Still Distillation
R12 Solvents/Organics Recovery -- Thin-Film Evaporation
R13 Solvents/Organics Recovery -- Fractionation
R14 Solvents/Organics Recovery -- Solvent Extraction
R19 Solvents/Organics Recovery -- Other
R21 Metals Recovery -- Electrolytic
R22 Metals Recovery -- Ion Exchange
R23 Metals Recovery -- Acid Leaching
R24 Metals Recovery -- Reverse Osmosis
R26 Metals Recovery -- Solvent Extraction
R29 Metals Recovery -- Other
R99 Other Reuse or Recovery

Solidification/Stabilization

G01 Cement Processes (including Silicates)
G09 Other Pozzolonic Processes (including Silicates)
G11 Asphaltic Processes
G21 Thermoplastic Techniques
G99 Other Solidification Processes

Incineration/Thermal Treatment

F01 Liquid Injection
F11 Rotary Kiln with Liquid Injection Unit
F19 Other Rotary Kiln
F31 Two Stage
F41 Fixed Hearth
F42 Multiple Hearth
F51 Fluidized Bed
F61 Infra-Red
F71 Fume/Vapor
F81 Pyrolytic Destructor
F82 Wet Air Oxidation
F83 Thermal Drying/Dewatering
F99 Other Incineration/Thermal Treatment

Physical Treatment

P01 Equalization
P09 Other Blending
P11 Settling/Clarification
P12 Filtration
P13 Sludge Dewatering (non-thermal)
P14 Air Flotation
P15 Oil Skimming
P16 Emulsion Breaking -- Thermal
P17 Emulsion Breaking -- Chemical
P18 Emulsion Breaking -- Other
P19 Other Liquid Phase Separation
P21 Adsorption -- Carbon
P22 Adsorption -- Ion Exchange (other than for recovery/reuse)
P23 Adsorption -- Resin
P29 Adsorption -- Other
P31 Reverse Osmosis (other than for recovery/reuse)
P41 Stripping -- Air
P42 Stripping -- Steam
P49 Stripping -- Other
P51 Acid Leaching (other than for recovery/reuse)
P61 Solvent Extraction (other than for recovery/reuse)
P99 Other Physical Treatment

IC = Influent Concentration; where

1 = Greater than 1%,
2 = 100 parts per million (ppm; 0.01%) to 1% (10,000 ppm)
3 = 1 ppm to 100 ppm,
4 = 1 part per billion (ppb) to 1 ppm, and
5 = Less than 1 ppb.

STI = Sequential Treatment; where

Y indicates that individual treatment steps are used in a series to treat the toxic chemical and there is no data on the efficiency of each step, however, an estimate of overall efficiency of the treatment sequence can be estimated.

EFFIC = Efficiency Estimate (i.e., refers to the percent destruction, degradation, conversion, or removal of the listed toxic chemical from the waste stream.

OD = Operating Data; where

Y = The treatment efficiency estimate is based on actual operating data,

N = The treatment efficiency is not based on actual operating data, and

NA = Not applicable.

Parent Company = the highest level company, located in the Unites States, that directly owns at least 50% of the voting stock.

On-Site = The maximum quantity of the chemical (e.g., in storage tanks, process vessels, on-site shipping containers) at your facility at any time during the calendar year. The following codes represent the weight range in pounds on-site.

WEIGHT RANGE IN POUNDS

Range Code	From...	To...
01	0	99
02	100	999
03	1,000	9,999
04	10,000	99,999
05	100,000	999,999
06	1,000,000	9,999,999
07	10,000,000	49,999,999
08	50,000,000	99,999,999
09	100,000,000	499,999,999
10	500,000,000	999,999,999
11	1 billion	more than 1 billion

Fugitive Emissions = all releases to the air that are not released through stacks, vents, ducts, pipes, or any other confined air stream (pounds/year).

FC = Basis of Fugitive Emissions Estimate.

SC = Basis of Stack Emissions Estimate.

FC and SC codes are as follows:

M - Estimate is based on monitoring data or measurements for the toxic chemical as released to the environment and/or off-site facility.

C - Estimate is based on mass balance calculations, such as calculation of the amount of the toxic chemical in streams entering and leaving process equipment.

E - Estimate is based on published emission factors, such as those relating release quantity to through-put or equipment type (e.g., air emission factors).

O - Estimate is based on other approaches such as engineering calculations (e.g., estimating volatilization using published mathematical formulas) or best engineering judgement. This would include applying an estimated removal efficiency to a waste stream, even if the composition of the stream before treatment was fully identified through monitoring data.

Source: Toxic Chemical Release Inventory Reporting Form R and Instructions, Revised 1990 Version, Section 313 of the Emergency Planning and Community Right-to-Know Act (Title III of the Superfund Amendments and Reauthorization Act of 1986). U.S. Environmental Protection Agency, Office of Toxic Substances, Washington, DC, EPA 560/4-91-007, January 1991.

APPENDIX E

CALCULATION OF UNCONTROLLED OPEN-TOP VAPOR CLEANER EMISSION FACTOR INCORPORATING RECYCLE

EXAMPLE CALCULATION: UNCONTROLLED EMISSION FACTOR CONSIDERING RECYCLE

- A material balance is used to estimate emission factors (kg emitted/kg fresh solvent used) considering off-site waste solvent recycle. OTVC factors are shown as an example.

- The emission factor for OTVC not considering waste solvent recycle is 0.66 kg emitted/kg used. The remainder of usage (.34 kg/kg) becomes waste solvent.

- Let x - recycled solvent use.

- For every 1 kg of fresh (virgin) solvent used:

  - Total solvent use = 1 + x
  - Total air emissions = 0.66 (solvent use) = 0.66 (1 + x)
  - Waste solvent = 0.34 (1 + x)

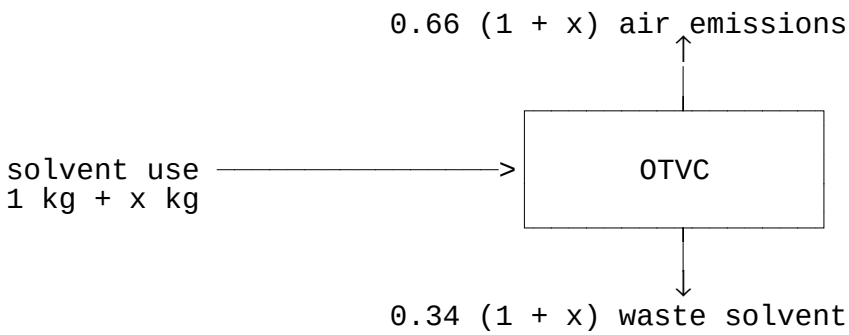

- It is assumed that 75% of waste solvent is recovered by off-site solvent recyclers and returned for use in cleaning. The other 25% is unrecovered and is disposed of.

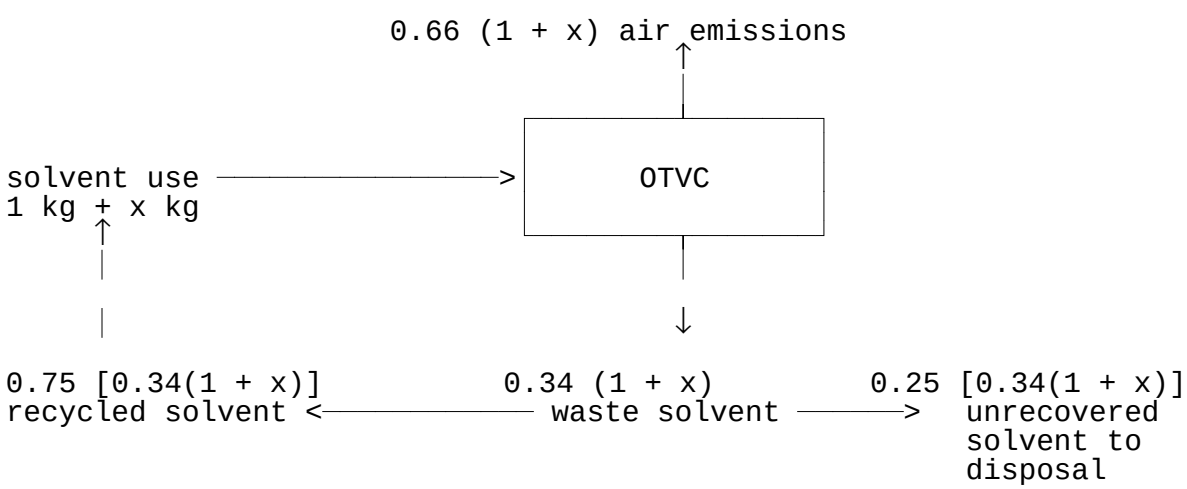

- Calculate amount of recycled solvent used

  $x = 0.75\ [0.34(1 + x)]$

  $x = 0.342$
  (kg of recycled solvent used per kg fresh solvent used)

- Calculate air emissions

  $x = 0.66\ (1 + x) = 0.89$
  (kg emitted to the air per kg fresh solvent)

- Thus, emission factor for OTVC considering recycle = 0.89 kg/kg fresh solvent use.

Source: Memorandum from R. C. Mead and R. F. Pandullo, Radian Corporation, to D. Beck, U.S. Environmental Protection Agency. Calculation of Number of Organic Solvent Cleaners and Solvent Emissions and Use Per Model Plant. September 8, 1987.