SF6 Emission Reduction
Partnership for the Magnesium Industry

Characterization of Cover Gas and Byproduct Emissions from Secondary Magnesium Ingot Casting at Advanced Magnesium Alloys Corporation (AMACOR)

Office of Air and Radiation
Office of Atmospheric Programs, Climate Change Division

Characterization of Cover Gas and Byproduct Emissions from Secondary Magnesium Ingot Casting at Advanced Magnesium Alloy Corporation (AMACOR)

Prepared By:

ICF International
1725 Eye St., NW, Suite 1000
Washington, DC 20006

Industrial Monitoring and Control Corporation
800 Paloma Dr., Suite 100
Round Rock, TX 78665

Prepared For:

Kirsten Cappel
U.S. Environmental Protection Agency
Climate Change Division
1200 Pennsylvania Avenue, NW
Washington, DC 20460

June 2009

Table of Contents

Page

Acknowledgement ..... **vi**

Executive Summary **ES-1**

1.0 Introduction **1-1**

2.0 Methodology **2-1**

2.1 Principles of FTIR Monitoring 2-1

2.2 Principles of RGA Monitoring 2-6

2.3 Ambient Air Dilution Considerations 2-8

3.0 Monitoring Results **3-1**

3.1 Casting Hood Monitoring 3-1

3.2 Worker Exposure Monitoring 3-5

4.0 Cover Gas Destruction **4-1**

4.1 Determining Dilution 4-1

4.2 Determining Cover Gas Destruction 4-3

5.0 Discussion **5-1**

5.1 Cover Gas Test Observations 5-1

5.2 Climate Change Potential Discussion 5-3

5.3 Uncertainty Discussion 5-4

Appendix A. Calibration and Diagnostic Checks **A-1**

Appendix B. Measurement Study Protocol **B-1**

List of Tables

Page

ES-1 Cover Gas Average Concentrations and Observed Destruction ES-2

ES-2 Global Warming Potential of Alternative Cover Gas Mixtures..... ES-3

1-1 Test Schedule and Process Conditions 1-2

1-2 Magnesium Ingot Casting Machine Parameters 1-2

2-1 FTIR Analysis Method Parameters and Minimum Detection Limits 2-3

2-2 Extractive FTIR Configurations and Operating Parameters..... 2-4

2-3 Relative Isotopic Abundance for Argon and Neon..... 2-7

3-1 Data Summary for SF_6 Cover Gas Mixture 3-2

3-2 Data Summary for MTG-Shield™ using Novec™ 612 3-3

3-3 Data Summary for SO_2 Cover Gas Mixture 3-4

3-4 Worker Exposure Monitoring..... 3-5

4-1 Average Concentrations of Neon and CO_2 for Determining Dilution..... 4-2

4-2 Dilution Percentages (DP) Calculated by Ne Tracer and CO_2 Measurement..... 4-3

4-3 Percent Destruction for Cover Gas Testing: Dilution Percent..... 4-4

5-1 Comparison of 100-year GWP Estimates from the Intergovernmental Panel on Climate Change (IPCC) Second (1996) Assessment Report..... 5-3

5-2 Normalized GWP Comparison of Measured Emissions from Inside the Casting Hood …..... 5-6

5-3 GWP (Weighted by Flow Rate) Comparison of Measured Emissions from Inside the Casting Hood 5-7

List of Figures

Page

2-1 Casting Hood and Sampling System Schematic 2-5

2-2 RGA Component Block Diagram 2-6

4-1 RGA Dilution Measurements, 18 December 2008 4-2

Acknowledgements

The analytical measurements, data interpretation, and report preparations were funded by the U.S. Environmental Protection Agency under contract EP-W-07-068 to ICF International. The authors wish to express their appreciation and thanks to Advanced Magnesium Alloys Corporation (AMACOR) and staff, especially Judge Morton, for contributing not only their facilities but also their valuable assistance and advice to this measurement study. The support of Polycontrols Inc. and 3M™ for providing the cover gases, their expertise, and trial staff for this study is also gratefully acknowledged.

Executive Summary

To protect molten magnesium from oxidation, the cover gas sulfur hexafluoride (SF_6) is widely used throughout magnesium production and processing industry. The U.S. Environmental Protection Agency (EPA) has set a goal of eliminating the use of SF_6 for this application by 2010; and in order to support the achievement of this goal EPA has been evaluating the use of alternative gases to serve the same function as SF_6. The purpose of this study is to continue the evaluation of greenhouse gas (GHG) emissions and occupational exposure associated with the SF_6 and alternative cover gas technologies. In this study cover gas emissions are continuously monitored through multiple sample points, and cover gas mixtures are tested in an ingot casting hood environment. An ingot casting machine located at the Advanced Magnesium Alloys Corporation (AMACOR) facility in Anderson, Indiana was used to examine the use of SF_6, pentafluoroethylhepafluoro-isopropylketone (Novec™ 612), and sulfur dioxide (SO_2).[1] For each cover gas regime tested, process and operating parameters were maintained at similar levels through the evaluation process. Sampling locations were spaced throughout the hot and cold zones of the ingot casting hood; which upon injection of each cover gas mixture, allows for the characterization of the hood environment as the cover gases are interacting with the magnesium melt surface and undergoing thermo-degradation. Results are presented for three sample points in the casting hood: one in the cold zone and two in the hot zone. Details and results from sampling in the casting hood are summarized in Table ES-1; the cover gas destruction rates have been corrected for dilution effects.[2]

Observed Percent Destruction for Cover Gases

Destruction estimates calculated in this study were corrected for dilution effects (i.e., the effects of air ingression into the ingot casting hood). For every cover gas that was tested, a destruction estimate was determined by the percent difference between the expected dilution corrected delivery concentration and the measured concentration in the casting area. These corrected destruction estimates are shown in Table ES-1. Average destruction estimates for Novec™ 612 and SF_6 were on the order of 3.7 percent and 1.5 percent, respectively. Destruction estimates for SO_2 were on the order of 5.9 percent for this study. It should be noted that high levels of dilution found in this study and associated measurement uncertainty resulted in calculated destruction rates for some tests being unreasonable (i.e., negative) and these values were treated as zero destruction results.

[1] Testing for dilute SO_2 was inhibited by technical difficulties with the gas mixing system in the very low temperatures of the facility; this cover gas was only monitored for very brief periods of time.
[2] The term destruction is utilized throughout the remainder of this report to represent the thermo-degradation and disassociation of the cover gas agent resulting in byproduct formation and melt protection.

The destruction rates estimated for SF_6 in this study were significantly lower than what was estimated during previous research evaluating die casting holding furnaces (on the order of 20 to 30 percent). This is likely due to the much higher levels of dilution and reduced thermo-chemical intensity of the casting hood environment. This result is consistent with the prior ingot casting study that also found very low destruction rates for SF_6.

Table ES-1. Cover Gas Average Concentrations and Observed Destruction

Test Number and Location	Cover Gas Mixture Components	Flow[a] (lpm)	Direct Cover Gas Delivery Conc.[b] (ppmv)	Cover Gas Measured Conc. (ppmv)	Dilution Percentage (percent)	Estimated Cover Gas Destruction Factor[c] (percent)
1CZ	SF_6/CDA	68	4241	723.9	83.7	4.4
1HZA	SF_6/CDA	132	4241	386.3	94.9	≈0
1HZB	SF_6/CDA	132	4241	1022.7	85.2	≈0
2CZ	Novec™ 612/CDA/CO_2	68	2172	376.6	83.7	2.9
2HZA	Novec™ 612/CDA/CO_2	132	2172	107.3	94.9	8.1
2HZB	Novec™ 612/CDA/CO_2	132	2172	429.4	85.2	≈0
3CZ	SO_2/CDA	68	20,000	2935.7	83.7	17.8
3HZA	SO_2/CDA	132	20,000	1351.1	94.9	≈0
3HZB	SO_2/CDA	132	20,000	3177.1	85.2	≈0

[a] Approximate, estimated by reading flow rates on gas delivery manifold rotameters (uncalibrated). It was assumed that 17% of the total flow went to the cold zone, 33% went to hot zone A, 33% went to hot zone B, and the remaining 17% went to a third hot zone, which was not sampled in this experiment. The total flow to the casting hood was approximately 400 lpm.
[b] Measured directly at manifold; only for primary gases of concern (SF_6, Novec™ 612, and SO_2) for the three cover gas systems.
[c] High levels of dilution resulted in the negative calculated destruction rates. These values were treated as zero destruction results.

Occupational Exposure Monitoring

Workers near the casting hood may be exposed to harmful emissions as a result of using each cover gas; in particular the dilute SO_2 or the possibility of the production of the byproduct HF. Due to the stringent occupational exposure limits of these compounds, a sampling point was situated near the hood viewing window in addition to inside the casting hood. This sampling, which was preformed using a separate FTIR, continuously, monitored the ambient air near a worker station for observing newly cast ingots in the hood. The results for the occupational exposure monitoring undertaken during this study can be referenced in Table 3-4. SF_6 was detected during all cover gas runs, albeit in very small harmless concentrations (max = 1.034 ppmv). Novec™ 612, which has an Occupational Safety and Health Administration (OSHA) Permissible Exposure Limit (PEL) of 150ppmv, was detected during the Novec™ 612 cover gas runs at small, harmless concentrations (max = 2.761 ppmv). HF was detected only during the Novec™ 612 runs at very small concentrations (max = 0.138 ppmv), well below the OSHA PEL of 3.0 ppmv. SO_2 was detected during the SO_2 cover gas runs at 1.4 and 2.7 ppmv; SO_2 was not

detected when SF_6 or Novec™ 612 was the cover gas in use. The detection of SO_2 above the OSHA PEL of 2 ppmv highlights the safety concerns associated with usage of this cover gas.

Potential Climate Impact

The motivation behind this study is to determine viable alternative cover gases to SF_6, which has one of the highest composite global warming potentials (GWPs) known. Global warming potentials are based on the heat-absorbing capability and atmospheric lifetime of each gas relative to that of carbon dioxide. Since all GWPs are expressed in terms of carbon dioxide equivalents, a basis for comparison of effects of various gases is created. An aggregate global warming impact was determined for every cover gas and its associated destruction byproducts through the utilization of the GWP values from the Intergovernmental Panel on Climate Change (IPCC) Second Assessment Report (SAR).[3] Using each cover gas regime's measured average concentrations of each individual gas, their molecular weights, and the delivery cover gas flow rate, the over total GWP-weighted gas emissions rate was determined. These total GWP-weighted emissions rate, expressed in amount of CO_2 equivalents, were then compared to the amount of CO_2 equivalent emissions of the current cover gas regime of SF_6/CDA.

Based on this approach, results indicate that both the Novec™ 612 cover gas mixture and the SO_2 cover gas mixture have a GHG emission impact – weighted by cover gas flow – that is at least 99 percent lower than SF_6. Results for the analysis of the GWPs of the two alternative cover gas regimes, Novec™ 612 / CDA / CO_2 and SO_2 / CDA, are presented in Table ES-2.

Table ES-2. Global Warming Potential of Alternative Cover Gas Mixtures

Cover Gas Mixture	GHG Emissions Relative to Existing SF_6 system (percent reduction)
Novec™ 612 / CDA / CO_2	≥99
SO_2 / CDA	100

[3] IPCC, Climate Change 1996: The Scientific Basis. Intergovernmental Panel on Climate Change, 1996, Cambridge University Press. Cambridge, U.K.

1. Introduction

The intent of this report is to summarize and interpret the results of an emissions measurement study of air-entrained cover gas blends in a magnesium ingot casting hood. The measurements were performed by Industrial Monitoring and Control Corporation (IMACC) on a single magnesium alloy ingot casting machine at the Advanced Magnesium Alloys Corporation (AMACOR) facility in Anderson, Indiana. The study was conducted over the course of the week of 14 December 2008. Through the use of Fourier Transform Infrared (FTIR) Spectroscopy and Quadrupole Mass Spectrometry (QMS), cover gas in the casting hood and ambient air were monitored and analyzed in near-real time. Employing these measurement technologies allowed for the simultaneous quantification of multiple concentrations in the cover gas environments at ppmv-level sensitivities.

Cover gases are used in magnesium production to protect molten magnesium against potential surface ignition or burning. This study analyzed three cover gas regimes, whose base gases were sulfur hexafluoride (SF_6), pentafluoroethylhepafluoroisopropylketone (known by trade name Novec™ 612), and sulfur dioxide (SO_2). The primary objectives of this study are the following.

- Characterize the cover gas destruction at this particular ingot casting tool. Destruction rates of cover gases have an impact on the overall greenhouse gas (GHG) emissions from magnesium casting. Destruction, which is the percentage of base cover gas consumed by the process, may occur by breakdown to a magnesium fluoride (MgF_2) film and subsequent chemical byproducts, or by direct conversion to byproducts from the thermal conditions and chemistries residing in the casting space environment.
- Characterize the ambient air dilution into the ingot casting and cooling environments. The casting hood in both the hot zone and cold zone sections is not completely sealed, so a considerable amount of air intrusion was expected to occur. To correctly report destruction rate, which must be separated from overall concentration reductions, the ambient air dilution must be factored into the cover gas consumption considerations.
- Characterize the chemical byproducts created for each cover gas mixture during ingot casting. The base cover gas and the concentrations at which it is used can have a greatly varied effect on the types and relative amounts of byproducts generated from casting. Some byproducts may contribute to the overall global warming potential of the cover gas mixtures.
- Identify and detect low concentration occupational exposure emissions for each cover gas mixture. Using the most sensitive FTIR system available, monitor the casting hood operator area for base cover gas and byproduct emissions.

The measurement schedule and test conditions are summarized in Table 1-1. Rather than being fixed, these conditions were what was encountered during facility operations at the time of testing and resulted in a variety of cover gas mixture compositions over different alloy castings. The ingot casting machine parameters are summarized in Table 1-2.

Table 1-1. Test Schedule and Process Conditions

Date (mm/dd/yy)	Approx. Casting Time (Local Time)	Cover Gas Mixture Components[a]	Approximate Cover Gas Mixture Flows[b] (lpm)	Base Cover Gas Delivery Conc.[c] (ppmv)	Alloy Type
12/15/08	01:00-06:00	SF_6 / CDA	400	4241	AM 60
12/15/08-12/16/08	23:15-03:15; 03:45-05:15	SF_6 / CDA	400	4241	AM60
12/15/08	Noncasting run	SF_6 / CDA	400	4241	AM 60
12/18/08-12/19/08	Dilution run	SF_6 / CDA	400	4241	AZ 91
12/17/08	00:30-04:30	Novec-612 / CDA / CO_2	400	3300-1500	AM 60
12/17/08	Noncasting run	Novec-612 / CDA / CO_2	400	1650	AM 60
12/17/08-12/18/08	23:25-02:00	Novec-612 / CDA / CO_2	400	1650	AM 60
12/15/08	23:45-00:00	SO_2 / CDA	400	20,000	AM 60
12/16/08	03:00-03:45	SO_2 / CDA	400	20,000	AM 60

[a] CDA = compressed dry air
[b] Approximate, estimated by reading flow rates on gas delivery manifold rotameters (uncalibrated)
[c] Either measured directly at cover gas mix (SF_6), or calculated from flow settings (SO_2, Novec-612)

Table 1-2. Magnesium Ingot Casting Machine Parameters

Parameter	Machine Specification[a]
Facility	AMACOR: Anderson, IN
Ingot Casting Machine Type	Belt Caster
Ingot Weight (lbs)	25
Holding Furnace Capacity (lbs)	Continuous Flow
Alloy Type	All
Ingot Casting Rate (seconds/ingot)	10
Mg Pump Type	Centrifugal
Metal Throughput (lbs/hr)	8,000
Heat Casting Duration (hours)	6 (variable)
Ingot Mold Temperature (^oF)	≈120
Ingot Residence Time – Hot Zone (min)	≈2
Ingot Residence Time – Cold Zone (min)	≈2
Ingot Pour Control	Automatic

[a]As provided by AMACOR

2. Methodology

All gas samples from the casting hood environments and worker exposure area were extracted continuously from single points in space. There were three sampling points inside the casting hood, two in the hot zone and one in the cold zone. The hot zone was, in effect, divided into two zones, one where the molten magnesium was poured into rotating casting molds and one where the filled molds were conveyored through a partially enclosed hood with an observation window before reaching the cold zone. A more detailed description of the sampling system may be found in Section 2.1.2; the sampling schematic is presented as Figure 2-1.

In the following section of the report the method used to determine ambient air dilution and the field analytical methods used to survey gas samples are presented. The two analytical approaches used, FTIR and QMS, are explained in Sections 2.1 and 2.2 respectively.

2.1. Principles of FTIR Monitoring

FTIR monitoring is based on the principal that almost every chemical compound known absorbs some amount of infrared (IR) light in a particular region of the mid-IR spectrum. A compound's absorption properties can be used to classify and quantify a specific chemical in a complex mixture of gases. Through Beer's Law an empirical relationship is developed between the magnitude of the IR absorbance by a compound, and the optical depth of the compound. Optical depth is the product of the sample cell optical path length and the concentration of that specific compound in the gaseous mixture. With the use of extractive FTIR instrumentation levels in the ppb are measurable. Detection of levels on this scale are achievable due to the utilization of a series of mirrors in the measurement cell, which magnify the optical path length by reflecting the IR beam within the cell numerous times before the detector is reached. Using the series of mirrors, the optical path length in the FTIR measurement cell can be fixed to provide a length that is optimal for the mixture of gases being tested. However, in the interest of obtaining for each cover gas the most accurate quantifications over a linear dynamic measurement range, the strongest fundamental absorption bands with the largest integrated areas were chosen for analysis. Under the ppm to percentage level concentrations that the cover gases existed within the casting hood environments very short path lengths were required to prevent IR absorption saturation. Single pass sample cells without mirrors were used. As a result, optical path lengths of 8 m (for worker exposure monitoring), 0.1 m (for hot zone casting head space monitoring), and 0.15 m (for cold zone casting head space monitoring) were utilized for this study.

2.1.1. The FTIR Spectrum Analysis Method

Analytical FTIR spectrum analysis utilizes an identification method that involves matching the features of an observed spectrum to spectra of references gases whose concentration path length products are known. In the case that multiple features are found within one region, the compounds are quantified by using a linear combination of these references. Standards of gases of known concentrations are scaled in accordance with the observed band intensities in the sample, which is an action that helps to match the unknown concentrations. It takes approximately one second to collect and analyze a sample. However, spectra are typically averaged over longer integration periods of one to five minutes. This time enhanced averaging allows for production of adequate signal to noise limits and sub-ppm detection levels.

The absorption spectra of scaled references are combined by matrix addition which, in effect, produces a composite spectrum that best characterizes the sample. To match this reference absorption profile to the observed spectrum of the sample in a specified region of spectral analysis, a classic least squares mathematical fitting procedure is used. Within any analysis region the compounds that are expected to cause spectral interference in addition to the target compounds in question are included.

The spectrum analysis methods used for this study were developed by selecting the spectral regions that were least affected by primary IR absorbers (in this case, H_2O and CO_2) while also producing the best detection limits, accuracies, and linearities possible for cover gas compounds and potential byproducts. Target compounds were determined prior to sampling based on previous tests of similar cover gas compositions. The analysis methods were iteratively refined by analyzing representative sets of IR spectra while varying quantitative analysis parameters until optimum methods were established. Methods were optimum when the 95 percent confidence levels (the errors indicating goodness-of-fit) and the absolute bias of all analytes were minimized. Table 2-1 lists the signal-to-noise limited detection limits, as they pertain to their respective cover gas mixture for all the compounds considered in the AMACOR casting hoods. Each analysis method has its respective compounds categorized according to their primary spectral analysis regions. This represents a comprehensive list of potential and existing contaminants, as well as potential process constituents (such as CH_4, CO, C_2H_2 and C_2H_4). The worker exposure monitoring system, which possessed a sample cell path length almost two orders of magnitude longer than the casting hood sample cells, maintained detection limits on the order of 100 times lower than those indicated in Table 2-1.

Table 2-1. FTIR Analysis Method Parameters and Minimum Detection Limits, in ppmv, within the Casting Hoods*

SF_6/CDA Analysis Method

Spectral Analysis Region (wavenumbers)	SF_6 MDL	HF MDL	CH_4 MDL	CO MDL	C_2H_2 MDL	C_2H_4 MDL
840-1000	0.4					8.2
3990-4150		4.0				
2073-2114				15.4		
2876-3180			10			
706-786					1.2	

SO_2/CDA Analysis Method

Spectral Analysis Region (wavenumbers)	SO_2 MDL	H_2SO_4 MDL	CH_4 MDL	CO MDL	C_2H_2 MDL	C_2H_4 MDL	H_2S MDL
1091-1403	10.0						200
800-1000		100				8.2	
2073-2114				15.4			
2876-3180			10.0				
706-786					1.2		

Novec-612/CDA/CO_2 Analysis Method

Spectral Analysis Region (wavenumbers)	Novec612 MDL	COF_2 MDL	CF_4 MDL	C_2F_6 MDL	HF MDL	CO MDL	CO_2 MDL	C_2H_2 MDL	C_2H_4 MDL	CH_4 MDL
900-1020		41.7							8.2	
1090-1400	2.3		0.2	4.5						
3990-4150					4.0					
706-786								1.2		
2228-2282							167			
2876-3180										10.0
2073-2114						15.4				

*Atmospheric constituents (H_2O, CO_2 and N_2O) were subtracted out before SF_6 or SO_2 analysis, to minimize spectral interferences. CO_2 is a major component of the Novec-612 mix, so it is included in the quantitative analysis method.

2.1.2. The Extractive FTIR Systems

Three extractive FTIR systems were used in this study. A single FTIR spectrometer provided modulated infrared (IR) radiation to two sample cells for simultaneous hot zone(s) and worker exposure analysis. An IR beam splitter and appropriate focusing optics allowed optimal signal-to-noise through-put from a cell designed for the relatively high concentrations (hundreds of ppmv) at the hot zone casting hood environments, as well as from a cell designed for the relatively low concentrations (sub-ppmv) outside the hoods. The simultaneous detection scheme required special electronic triggering and signal processing incorporated in a software application. A second FTIR spectrometer provided modulated IR radiation to another high concentration sample cell for cold zone analysis. The FTIR/sample cell configurations and spectrometer operating parameters are listed in Table 2-2 below:

Table 2-2. Extractive FTIR Configurations and Operating Parameters

	Hot Zones	***Cold Zone***	***Worker Exposure***
Cell Windows	ZnSe	ZnSe	ZnSe
Cell Material	Ni-Coated Al	Ni-Coated Al	Ni-Coated Al
Cell Volume	100 ml	150 ml	5 L
Pathlength	0.10 m	0.15 m	7.2 m
Typical Cell Sampling Pressure	0.90 atm	0.90 atm	0.90 atm
Cell Temperature	35° C	35° C	35° C
IR Detector	HgCaTe (MCT)	MCT	MCT
Spectral Resolution	0.5 cm^{-1}	0.5 cm^{-1}	0.5 cm^{-1}
Spectral Bandwidth	600 – 4500 cm^{-1}	600 – 4500 cm^{-1}	600 – 4500 cm^{-1}
Sample Interval	120 sec	120 sec	120 sec
Number of scans per sample interval	64	64	64

Each FTIR sample cell had its own dedicated Fox model number 611210-030 mini-eductor (venturi pump) that continuously pulled gas samples through it. Stainless steel sample probes (3/8-inch outside diameter (OD)) were used to extract gas samples from the three casting hood environments (hot zone at metal pour, hot zone at hood adjacent to metal pour, and cold zone at hood adjacent to hot zone hood) to perfluoroalkoxy (PFA) Teflon lines (1/4-inch OD). A single PFA line (¼-inch OD) attached to the 8 meter sample cell system acted as the sample probe at the worker exposure location. Flows on the order of 3 lpm were maintained through each extraction system. Sample cell temperatures were maintained at 35°C. The switching of sample streams from the hot zone at metal pour (hot zone "A") to the hot zone adjacent to metal pour (hot zone "B") and vice versa was performed manually by turning a three-way valve for periods of continuous sampling at each location. The sampling probe extended approximately 6-12 inches into each casting hood, but it was elevated about a foot above the metal surfaces for logistical reasons; the cover gas manifolds had prevented access close to the ingot molds. Approximate dimensions and configurations are indicated in the sampling schematic (Figure 2-1).

Figure 2-1. Casting Hood and Sampling System Schematic

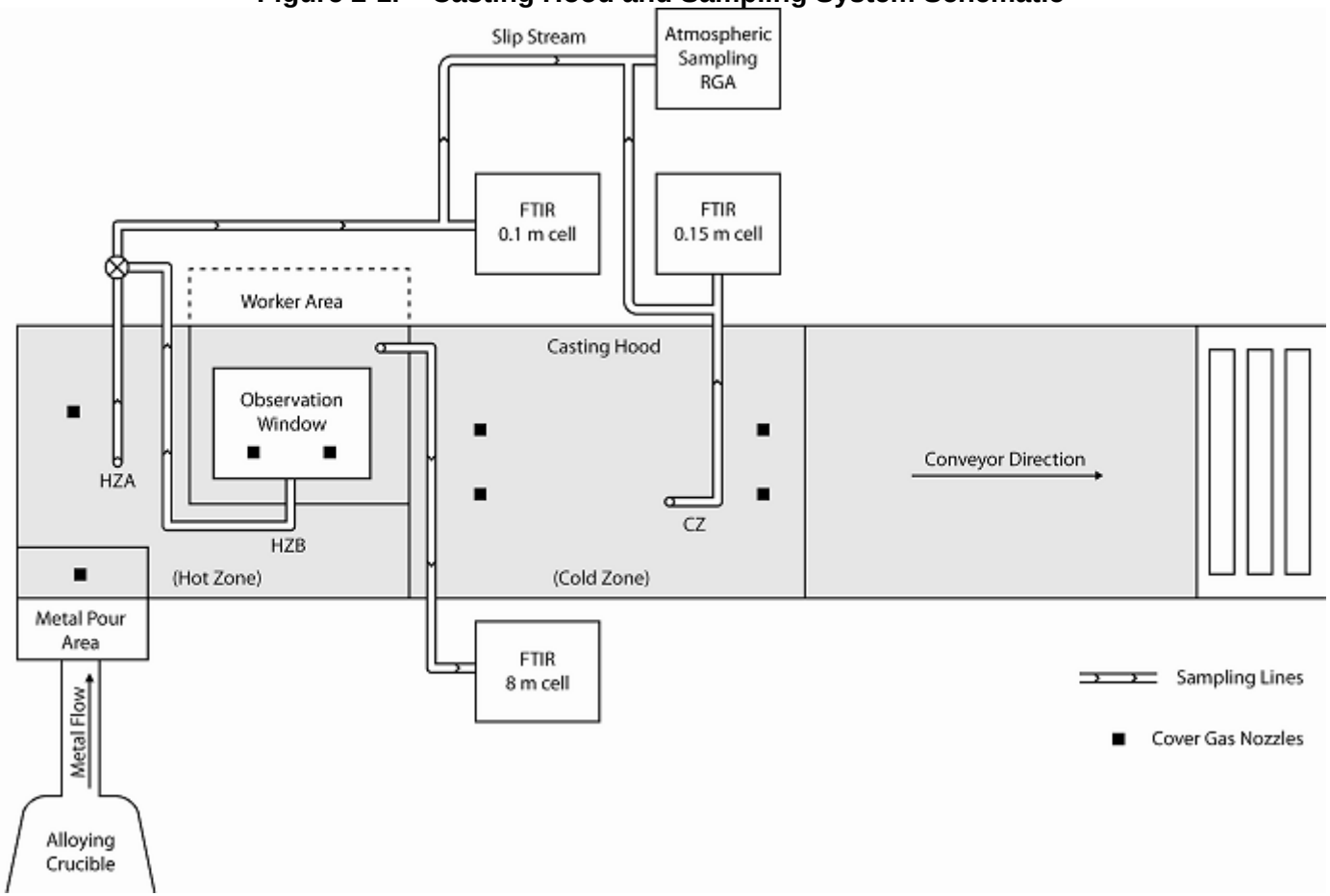

NOT TO SCALE

2.2. Principles of RGA Monitoring

A mass spectrum is obtained by converting components of a sample into rapidly moving gaseous ions and resolving them on the basis of their mass-to-charge ratios. The principles of mass spectrometry are straightforward; a block diagram showing the major components of the QMS based Residual Gas Analyzer (RGA) is displayed in Figure 2-2.

Figure 2-2. RGA Component Block Diagram

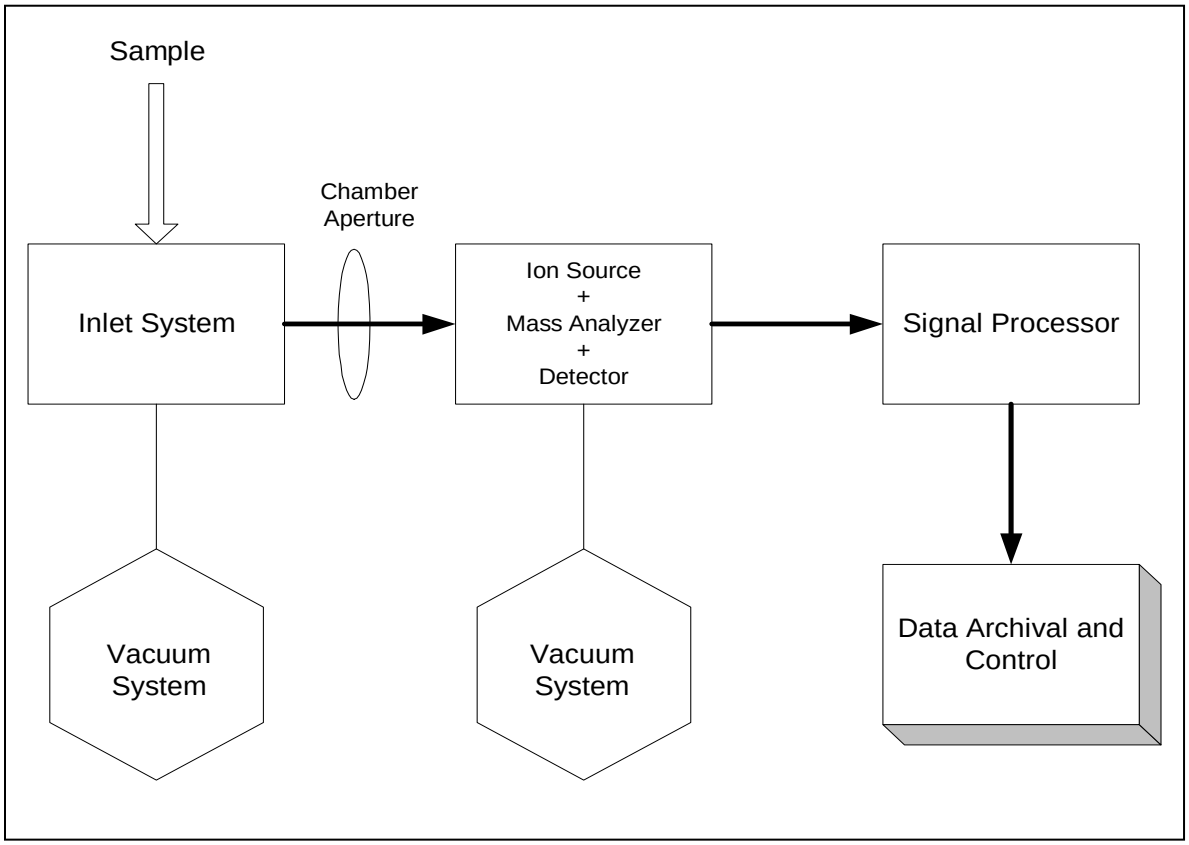

Descriptions of these components are included in Section 2.2.2. As molecules from the sample are ionized in the analyzer chamber, the detector registers a response for a given mass-to-charge (m/e) ratio at an intensity proportional to the absolute molecule count. The following section reports the desired m/e ratios for argon and neon, which were monitored during dilution measurements.

2.2.1. The RGA Spectrum Analysis Method

The RGA quadrupole mass analyzer breaks down molecules (or, in this case, the natural atomic species argon or neon) into fragments of varying m/e ratios. Therefore the specific m/e

for each compound of interest that leads to the greatest response at the detector was targeted. Table 2-3 lists the relative isotopic abundances in nature for argon and neon.

Table 2-3. Relative Isotopic Abundances for Argon and Neon

Isotope	Accurate Mass (amu)	Abundance (percent)
36-Ar	35.967546	0.34
38-Ar	37.962732	0.063
40-Ar	39.962383	99.60
20-Ne	19.992439	90.60
21-Ne	20.993845	0.26
22-Ne	21.991384	9.20

According to the information in Table 2-2, the derived m/e value for the "parent" argon ion is 40 and for neon is 20. As a result, rather than scanning across each m/e channel within its measurement range of 2 to 100 amu, the analyzer was focused directly to either m/e = 40 or m/e = 20. A few other m/e values were scanned during monitoring periods for diagnostic purposes, including parent ions for nitrogen and oxygen. In order to enable measurements of dilution percentage, the RGA detector response at a given m/e value (representative of the partial pressure of a species) was ratioed against the total RGA chamber pressure at the same time, then compared to the partial/total pressure at the same m/e when measuring the cover gas mixture directly sans dilution. Dilution determinations are reported in Section 4.

2.2.2. The Extractive RGA System

Traditionally, mass spectrometers are used in a vacuum. Coupled with the development of atmospheric samplers and closed ion sources, recent advancements of this technology have enabled atmospheric sampling. The "high pressure" RGA used in this study is smaller, more robust, and much more portable than its laboratory predecessors. Gas samples were brought to the mass analyzer vacuum chamber as slip-streams from the FTIR sample inlets via a venturi pump. The pump provided the sample matrix at less-than-atmospheric (~500 torr) pressures and with small residence times within the sample line tubing. The venturi pump extraction region, which is basically the inlet of the pump, was interfaced to the RGA sample chamber with a small orifice valve that was manually tuned to maintain a reasonable leak rate into the sample chamber. This orifice valve was separated from the mass analyzer chamber by a small diameter (< 100 μm) aperture. The inlet system was set to maintain a sample pressure of ~5 x 10^{-5} torr, which was an increase of 2-3 orders of magnitude over the mass analyzer chamber background pressure and which was maintained by turbomolecular pump. Detection sensitivities for argon and neon of approximately 100 ppmv was achieved.

The RGA detection system housed in the main (mass analyzer) chamber was a Micropole™ mass analyzer manufactured by Horiba. It consisted of an integrated package that operated a tungsten filament (the ionizer) coupled to a series of focusing lenses and a miniature array of quadrupoles (the mass analyzer) that allowed the ions to strike a Faraday Cup (the detector). The mass range for this analyzer was 2 to 100 amu with a resolution of 1 amu. A RS232 digital interface to a laptop and appropriate software allowed continuous operation and data archival.

2.3. Ambient Air Dilution Considerations

Though the ingot casting machine hot and cold zones were somewhat contained in a hooded enclosure, they were not completely sealed. A significant amount of ambient air dilution was anticipated and must be considered when computing destruction rates based on concentration measurements. As a result, the ambient air dilution within the casting hood was experimentally considered using three distinct approaches.

1) Neon tracer: A benefit of this was that neon background concentrations and cover gas mixture contributions were negligible, thus minimizing dilution rate bias. A challenge presented on-site involved providing adequate neon spiking flow rates and RGA measurement sensitivity, since the overall cover gas flow rates into the casting hoods were excessive.

2) Cover gas measurements during non-casting periods: Because casting operations at AMACOR were constant while the cover gas was being applied, measurements taken from the casting hood during normal testing conditions (a moving ingot mold conveyer belt with metal present) could be compared to a situation with a moving belt but no metal present. Since no magnesium was present in the casting hood zones to react with or degrade the cover gas, any reduction in the concentration of the cover gas constituents would be solely attributable to ambient air dilution. This test was run once for the SF_6 and Novec-612 cover gases (not the SO_2). A potential anticipated drawback to this procedure was that the ambient air/cover gas dilution dynamics may be different in a casting hood without molten magnesium and its resulting convective effects, though ingot molds are pre-heated. The dilution estimates determined through this approach were then used to determine cover gas destruction.

3) FTIR measurement of CO_2 during Novec-612 casting runs: Given that the Novec-612 cover gas mixture consisted of Novec-612 mixed with mostly CO_2 (on the order of 70 percent), and ambient air contains a negligible amount (several hundred ppm) in comparison, a straight ratio of CO_2 concentrations measured in the casting hoods to CO_2 concentrations measured directly from the cover gas mixing manifold

was considered the most accurate approach to determining process dilution. The potential impact of CO_2 interaction with molten magnesium was considered not to be a significant factor since the low surface areas and temperatures of the melt surfaces should have a minimal effect on such a large concentration of gas. As a result, continuous monitoring of CO_2 within the casting hoods during ingot casting runs provided direct and nonintrusive measurements of dilution under process conditions.

3. Monitoring Results

3.1. Casting Hood Monitoring

Each cover gas mixture has the potential to generate a variety of chemical byproducts that are due to local thermal plasma effects near the ingot melt surfaces. The amount of air dilution was expected to impact the type and relative amounts of these byproducts, but the extent of this impact is not completely understood. For example, air dilution provides a source of hydrogen as a chemical pathway so that fluorinated cover gas mixtures (SF_6 and Novec™ 612) were expected to produce a hydrogen fluoride (HF) byproduct. Also, the thermal plasmas within the local volumes around each ingot mold were expected to break down the base cover gas mixture components into reactive atomic and free radical species. These species would then recombine into other byproducts that were mostly fluorinated. This would be especially true for Novec™ 612 mixtures, as perfluorocarbons (PFCs) have previously been observed during tests conducted on magnesium die casting holding furnaces.[4]

However, for this measurement study, the expected byproducts normally produced at ppmv levels in holding furnaces were not analytically detected because of the small surface areas of the magnesium melts and the high degree of dilution in the ingot casting hood. This result is consistent with the findings from the previous measurement study on an ingot casting machine. Table 3-1 summarizes the cover gas, ambient air, and combustion-type compounds and the expected destruction byproducts for the SF_6 cover gas runs. Unobserved compounds/byproducts are reported as unknown values less than their FTIR Minimum Detection Limits (MDLs) listed in Table 2-1. Table 3-2 summarizes the compounds for the Novec™ 612 cover gas runs and Table 3-3 summarizes those for the SO_2 cover gas mixture.

The monitoring results in the three tables provide a direct measurement of the cover gas concentration being fed into the casting hood along with the minimum, average, and maximum values recorded for the sample points inside the casting hood itself. The monitoring results for inside the casting hood are grouped by test period.

It should be noted that the mixer used to deliver the dilute SO_2 cover gas experienced operational difficulties and measurements were only feasible for very brief periods of time. The complications were believed to be due in part to the very low temperatures in the facility and condensation of the gaseous SO_2 in the mixer. The portable gas delivery systems used in these trials are not as robust as what would be installed on a permanent basis for melt protection.

[4] US EPA. *Characterization of Emissions and Occupational Exposure Associated with Five Cover Gas Technologies for Magnesium Die Casting*, 2007

Table 3-1. Data Summary for SF_6 Cover Gas Mixture

Test Number and Location		SF_6 (ppmv)	CO (ppmv)	CH_4 (ppmv)	HF (ppmv)	C_2H_2 (ppmv)	C_2H_4 (ppmv)
Direct		4241					
1HZA	**Min**	273.2					
	Max	469.7					
	Avg	386.3					
	MDL		15.4	10.0	4.0	1.2	8.2
1HZB	**Min**	895.5					
	Max	1120.2					
	Avg	1022.7					
	MDL		15.4	10.0	4.0	1.2	8.2
1CZ	**Min**	657.3					
	Max	817.9					
	Avg	723.9					
	MDL		15.4	10.0	4.0	1.2	8.2
1HZA noncast	**Min**	161.6					
	Max	183.4					
	Avg	172.3					
	MDL		15.4	10.0	4.0	1.2	8.2
1HZB noncast	**Min**	810.0					
	Max	930.5					
	Avg	860.9					
	MDL		15.4	10.0	4.0	1.2	8.2
1CZ noncast	**Min**	819.4					
	Max	985.1					
	Avg	912.8					
	MDL		15.4	10.0	4.0	1.2	8.2

MDL is reported if the compound was not detected; all the byproducts listed met this criteria.

Table 3-2. Data Summary for MTG-Shield™ using Novec™ 612

Test Number and Location		Novec™ 612 (ppmv)	CO_2 (%)	CO (ppmv)	CH_4 (ppmv)	HF (ppmv)	CF_4 (ppmv)	C_2F_6 (ppmv)	C_2H_2 (ppmv)	C_2H_4 (ppmv)	COF_2 (ppmv)
Direct		2172.1	66.3								
2HZA	**Min**	29.0	1.9								
	Max	173.8	5.0								
	Avg	107.3	3.6								
	MDL			15.4	10.0	4.0	0.2	4.5	1.2	8.2	41.7
2HZB	**Min**	358.1	9.0								
	Max	452.9	10.4								
	Avg	429.4	9.9								
	MDL			15.4	10.0	4.0	0.2	4.5	1.2	8.2	41.7
2CZ	**Min**	346.7	9.3								
	Max	398.4	10.4								
	Avg	376.6	9.7								
	MDL			15.4	10.0	4.0	0.2	4.5	1.2	8.2	41.7
2HZA noncast	**Min**	66.4	3.0								
	Max	77.2	3.4								
	Avg	72.8	3.2								
	MDL			15.4	10.0	4.0	0.2	4.5	1.2	8.2	41.7
2HZB noncast	**Min**	355.0	8.7								
	Max	412.2	10.0								
	Avg	392.5	9.6								
	MDL			15.4	10.0	4.0	0.2	4.5	1.2	8.2	41.7
2CZ noncast	**Min**	472.0	11.0								
	Max	526.0	12.3								
	Avg	500.3	11.8								
	MDL			15.4	10.0	4.0	0.2	4.5	1.2	8.2	41.7

MDL is reported if the compound was not detected; all the byproducts listed met this criteria.

Table 3-3. Data Summary for SO_2 Cover Gas Mixture

Test Number and Location		SO_2 (ppmv)	H_2SO_4 (ppmv)	CH_4 (ppmv)	CO (ppmv)	C_2H_2 (ppmv)	C_2H_4 (ppmv)	H_2S (ppmv)
Direct		20,000						
3HZA	**Min**	918.4						
	Max	1603.3						
	Avg	1351.1						
	MDL		100	10.0	15.4	1.2	8.2	200
3HZB	**Min**	2794.8						
	Max	3740.4						
	Avg	3177.1						
	MDL		100	10.0	15.4	1.2	8.2	200
3CZ	**Min**	2356.2						
	Max	3249.4						
	Avg	2935.7						
	MDL		100	10.0	15.4	1.2	8.2	200

MDL is reported if the compound was not detected; all the byproducts listed met this criteria.

3.2. Worker Exposure Monitoring

The cover gases evaluated in this study can produce byproducts that may be of concern from an occupational exposure standpoint. Therefore, a long path (8 m) extractive FTIR system was used to monitor the ambient air near the casting machine operator station (see Figure 2-1) for any potential occupational exposure hazards associated with the usage of each cover gas. For example, SO_2 and HF have very low eight-hour time-weighted average exposure limits of 2 and 3 ppmv, respectively.[5] The area above the observation window in the hot zone casting hood was continuously monitored during the testing. Table 3-4 summarizes the concentrations observed, as well as the pertinent MDLs for the compounds not detected, for those species present in the casting hood at the highest concentrations – namely the primary cover gas compounds and the most significant byproduct (HF). The spectra were surveyed for the appearance of features attributable to compounds outside of those listed in Table 3-4 but none were observed besides expected ambient air constituents.

Average ambient concentrations of SO_2 directly above the viewing window of the casting hood during two tests did indicate an occupational exposure concern as they were near or above the permissible exposure limit (PEL) of 2 ppm.[6] This is to be expected considering that convection currents of cover gas escaping from the casting hood would be above the hood itself. Similar to workers standing above a holding furnace using dilute SO_2, special precautions would need to be taken to ensure safety if a worker was in a position above the casting hood for a prolonged period of time.

Table 3-4. Worker Exposure Monitoring

Date (m/dd/yy)	Approx. Casting Time (Local Time)	Cover Gas Mixture Components	Average SF_6 (ppmv)	Average SO_2 (ppmv)	Average Novec™ 612 (ppmv)	Average HF (ppmv)
12/15/08	01:00-06:00	SF_6/CDA	0.637	< 0.1	< 0.05	< 0.05
12/16/08	00:00-03:00; 03:45-05:15	SF_6/CDA	1.034	< 0.1	< 0.05	< 0.05
12/15/08	23:45-00:00	SO_2/CDA	0.503	1.448	< 0.05	< 0.05
12/16/08	03:00-03:45	SO_2/CDA	0.442	2.751	< 0.05	< 0.05
12/17/08	00:30-04:30	Novec™ 612/CDA/CO_2	0.128	< 0.1	0.282	0.138
12/17/08-12/18/08	23:25-02:00	Novec™ 612/CDA/CO_2	0.136	< 0.1	2.761	0.091

Compounds listed with values as < X were not observed; their detection limits are reported as the value X.
n/a – not applicable

[5] OSHA Permissible Exposure Limit (PELs), http://www.osha.gov
[6] It should be noted that elevated levels of SO_2 cover gas (2 percent) were being used during these brief testing periods due to complications with the mass flow controllers in the gas mixer. It is likely that a lower optimized delivery concentration would reduce ambient concentrations found above the casting hood.

4. Cover Gas Destruction

Throughout each casting run listed in Table 1-1, the primary cover gas components and byproducts were quantified simultaneously at the casting hood hot zones and the cold zone (see Figure 2-1). As the cold zone was continuously monitored throughout, roughly half of each monitoring period was spent sampling the hot zone "A" port (metal pour); the other half was spent at the hot zone "B" (hot casting hood) port. On some occasions, it was possible to monitor at these sampling ports while the ingot casting conveyor was moving and still heated but with no magnesium being poured: this was known as a "noncasting condition". In addition, on some occasions it was possible to sample the cover gas composition at the outlet of the gas blending manifold before injection into the casting hood. This was known as a "direct" cover gas mixture measurement. Average concentrations over the sampling periods were then used to calculate cover gas destruction percentages via the following approach:

Consider the injection cover gas concentration (after factoring in ambient air dilution) versus the cover gas concentrations at the sampled locations. Calculate the destruction factor (DF) as a percentage using

$$DF = 100 \times \left[1 - \frac{\text{sample cover gas conc.(ppm)}}{\text{direct cover gas conc.(ppm)}} \times \frac{1}{\left(1 - \frac{DP}{100}\right)} \right]$$

where DP is the dilution percentage, which was determined experimentally by CO_2 measurements during Novec™ 612 runs or neon tracer testing, as reported in Section 4.1.

The concentration and DF results for each cover gas mixture are reported in section 4.2.

4.1. Determining Dilution

Figure 4-1 shows a plot of the RGA-measured concentrations, expressed as partial pressure at m/e = 20 divided by total chamber pressure, for neon. This corresponded to a period of time when a neon tracer was injected into the cover gas blending manifold with a flow producing concentrations on the order of 2.5 percent. Notated on the graph is when the monitoring occurred at a specific sampling location (cold zone, hot zone "A" at metal pour, hot zone "B" within its hood and cover gas direct). Table 4-1 summarizes the average neon concentrations and the average CO_2 concentration results measured by FTIR during Novec™ 612 casting (an excerpt of the data from Table 3-2).

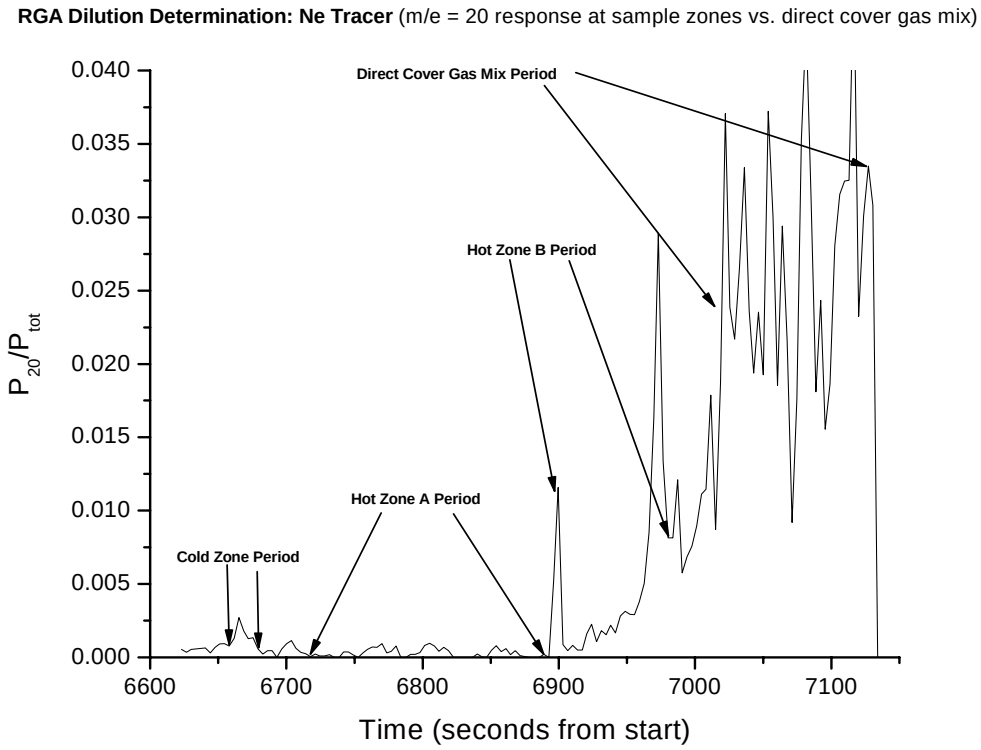

Figure 4-1. RGA Dilution Measurements, 18 December 2008

Table 4-1. Average Concentrations of Neon and CO_2 for Determining Dilution

Sample Location	Average Neon (%)	Average CO_2 (%)
Direct	2.681	66.3
Cold Zone	0.168	9.7
Hot Zone "A"	0.028	3.6
Hot Zone "B"	0.524	9.9

DP calculations were carried out accordingly:

$$DP = 100 \times [1 - \text{sample } CO_2/\text{neon } (\%) \div \text{direct } CO_2/\text{neon in cover gas mixture } (\%)]$$

The DP values at each location are reported in Table 4-2. Besides experimental measurement uncertainties, more significant for the RGA (~±20 percent) than FTIR (~±10 percent), there may be inherent sampling variability due to ingot mold movement through the casting hood and interactions with flows from cover gas nozzles. Still, reasonable agreement did exist between the two measurement approaches, as indicated in Table 4-2. Dilution was estimated to be significant, on the order of 80 percent to 98 percent depending on the zone and calculation method used. Due to the significant variability found in the Ne tracer DP calculations, the average of the lower of the CO_2 measurement DP values was used to estimate destruction.

Table 4-2. Dilution Percentages (DP) Calculated by Ne Tracer and CO_2 Measurement

Calculation Method	Cold Zone (percent)	Hot Zone A (percent)	Hot Zone B (percent)
Ne Tracer	93.7 (2.8)	98.9 (1.1)	80.5 (19.9)
CO_2 Measurement Noncast	82.2 (1)	95.2 (1)	85.5 (1)
CO_2 Measurement Cast	85.3 (1)	94.6 (1)	85.0 (1)
CO_2 Measurement Ave.	83.7	94.9	85.2

Parenthetical values represent (±) one absolute standard deviation.

4.2. Determining Cover Gas Destruction

Table 4-3 presents the cover gas flow rate, delivery concentration; FTIR measured concentration, dilution percentage, and calculated DF value for each available sampling site for each cover gas test. An average of the CO_2 measurement dilution percentage values is presented and used for estimating destruction. For SO_2, a noncasting run was not conducted because of logistical reasons. A direct sample of the SO_2 cover gas composition was also not possible from the temporary setup used during processing, so the direct SO_2 concentrations were estimated by calculation from the mass flow controller settings on the gas mixing system. DF values could be determined somewhat reliably at the cold zone, and were 4.4 percent, 2.9 percent and 17.8 percent for SF_6, Novec-612 and SO_2, respectively, when calculated by CO_2-based dilution percentages.

Determining DF values involved several experimental measurements to derive concentrations and DP values. As will be discussed in Section 5, the DF values determined by dilution considerations carry significant uncertainties because the DP values are rather large and contain significant variance. The DP values determined by CO_2 measurements, possessing lower

uncertainties than those determined by RGA, were utilized in the DF calculations. Also for this particular study, the DF values determined by casting/noncasting considerations carry significant variance because of sample port limitations from processing logistics (discussed in Section 5). These variances resulted in the generation of negative destruction values in some cases because the destruction is very low and near zero.

Table 4-3. Percent Destruction for Cover Gas Testing

Test Number and Location	Cover Gas Mixture Components	Flow[a] (lpm)	Direct Cover Gas Delivery Conc.[b] (ppmv)	Cover Gas Measured Conc. (ppmv)	Dilution Percentage (percent)	Estimated Cover Gas Destruction Factor[c] (percent)
1CZ	SF_6/CDA	68	4240.9	723.9	83.7	4.4
1HZA	SF_6/CDA	132	4240.9	386.3	94.9	≈0
1HZB	SF_6/CDA	132	4240.9	1022.7	85.2	≈0
2CZ	Novec™ 612/CDA/CO_2	68	2172.1	376.6	83.7	2.9
2HZA	Novec™ 612/CDA/CO_2	132	2172.1	107.3	94.9	8.1
2HZB	Novec™ 612/CDA/CO_2	132	2172.1	429.4	85.2	≈0
3CZ	SO_2/CDA	68	20,000	2935.7	83.7	17.8
3HZA	SO_2/CDA	132	20,000	1351.1	94.9	≈0
3HZB	SO_2/CDA	132	20,000	3177.1	85.2	≈0

[a] Approximate, estimated by reading flow rates on gas delivery manifold rotameters (uncalibrated). It was assumed that 17% of the total flow went to the cold zone, 33% went to hot zone A, 33% went to hot zone B, and the remaining 17% went to a third hot zone, which was not sampled in this experiment. The total flow to the casting hood was approximately 400 lpm.
[b] Measured directly at manifold; only for primary gases of concern (SF_6, Novec™ 612, and SO_2) for the three cover gas systems.
[c] High levels of dilution resulted in the negative calculated destruction rates. These values were treated as zero destruction results.

5. Discussion

5.1. Cover Gas Test Observations

Compared to the die casting crucibles previously studied, the design of typical magnesium ingot casting hoods suggested that the cover gas destruction would be low and difficult to estimate due to increased ambient air dilution and variability. This assumption was made due to the five factors listed below.

1. The overall surface area of molten magnesium to be covered in an ingot caster is smaller than typical die casting crucibles. Assuming that about six ingot molds containing molten metal are within the hot zone at the same time, and given that each mold has a surface area of about 800 cm^2, the total surface area of the covered molds is about 4,800 cm^2. A 1.2 meter diameter die casting crucible has a surface area of about 12,000 cm^2. A smaller covered surface area means that less of the cover gas is coming into direct continuous contact than with a larger covered holding furnace.
2. The freshly poured ingots within the hot zone begin cooling immediately after injection of molten magnesium. Alloying crucibles and holding furnaces must keep the metal in a liquid state throughout processing. This implies that less cover gas will interact and break down at the ingot surface as it cools, leading to lower destruction rates.
3. The casting hood volumes are greatly affected by ambient air dilution. Excessive dilution makes differential measurements difficult to carry out because the amount of dilution must be precisely and consistently characterized.
4. The casting hood volumes are quite large and the ingot protection atmosphere is very turbulent due to high cover gas flow rates and movement of the ingot molds. These characteristics create difficulties for continuous real-time extraction of representative gas samples, which makes analytical measurement precision challenging and greatly influences destruction calculations.
5. The dilution dynamics with the casting hood are presumably different during ingot casting, when molten metal is present, than during noncasting. Convection currents due to heat emanating from the ingot surfaces could lead to stratification of cover gas concentrations within the hood, making placement of the gas extraction probe critically important (if not impossible) for representative sampling.

These factors were born-out in the actual measurement results. Several reasonable estimations and observable trends can be gleaned from the results reported in Section 4. These observations would include the following:

- Destruction was generally low under all cases, with the exception of SO_2, which exhibited the highest destruction percentages (17.8 percent at the cold zone).

- Unrealistic, negative DF values were prevalent whether determined by dilution percentages or casting versus noncasting. This is a product of very low or near zero destruction and measurement uncertainty.
- Surprisingly, the most consistently reliable destruction percentages for both measurement methods were calculated at the cold zone sampling location, where DF values should be at their lowest.

For measurements during ingot casting, this study yields the following primary recommendations for future research: (1) maximize the representativeness of concentration analysis by setting up as many sampling points as possible for simultaneous gas extraction from the casting hood, and then (2) characterize ambient air dilution effects by basing the destruction calculations upon casting-versus-noncasting conditions. Instead of employing single point extraction probes, an area monitoring scheme, such as open-path FTIR, could possibly be better suited to averaging out stratification effects and dilution variability because the extent to which (1) can be applied is highly dependent upon logistical and process concerns. For this study it was not feasible to set up more than a single sampling port on the conveyor belt per casting hood zone, and rather removed from the ingot surfaces, without interfering with process activities such as metal pouring, cover gas manifold, and conveyor belt operation. An additional recommendation is to account for air turbulence effects during monitoring periods. For example, extend casting and noncasting events over longer continuous blocks of time to help smooth out the averaging and subsequent comparison of concentrations during the casting-versus-noncasting conditions. These analytic methodology improvements continue to be elusive given the constraints of an operating foundry with limited resources and stringent production requirements.

One benefit of the low destruction values and profuse air dilution is that the concentrations of cover gas byproducts were negligible within the casting hood and, by extension, also within the operator (ambient) environment. The tables in Section 3 indicate that the only measurable byproduct was HF and its average concentrations were well under 1 ppmv. Sulfur dioxide was detected at concentrations of 2 ppm directly above the casting hood near the ingot viewing window which indicates that occupational exposure concerns would need to be addressed with operational procedures for staff.

This study also indicates that there is significant uncertainty regarding the exact mixture of cover gas being applied using the current rotameter-based control system. Monitoring of the cover gas system currently utilized at the facility indicates that there may be significant over-protection occurring and that optimization to minimize cover gas usage would be achievable if the current rotameter-based controls were replaced or upgraded to a more accurate and consistent delivery control method.

5.2. Climate Change Potential Discussion

One of the benefits of using Novec™ 612 or SO_2 as cover gases for magnesium melt protection is their contribution to global climate change is significantly lower when compared to SF_6. This is evident when comparing their estimated global warming potentials (GWPs). Table 5-1 presents the GWPs of the cover gases used in this study.

Table 5-1. Comparison of 100-Year GWP Estimates for Cover Gases Tested during this Study

Gas	IPCC GWP
SO_2	0
Novec™ 612[a]	1
Sulfur Hexafluoride (SF_6)[b]	23,900

[a] D'Anna B, Sellevag S.R., Wirtz K., and Nielsen C.J. Photolysis Study of Perfluoro-2-methyl-3-pentanone Under Natural Sunlight Conditions Environ Sci and Tech 2005 39(22) 8708-8711

[b] IPCC (1996), Climate Change 1996: The Scientific of Climate Change. Intergovernmental Panel on Climate Change, Cambridge University Press. Cambridge, U.K.

To compare the climate change potential of the alternative cover gases, the average concentrations (parts per million by volume) for each of the component cover gases was multiplied by their respective GWP factors (obtained from the Second Assessment Report of the Intergovernmental Panel on Climate Change) to obtain a GWP-weighted value. The average of the GWP-weighted values (or the "CO_2 equivalent values") for each cover gas were then compared to the average CO_2 equivalent values corresponding to SF_6.

Table 5-2 shows that when comparing the CO_2 equivalent values, the alternate cover gases have a much lower impact. The source for this reduction is the comparatively high GWP of SF_6 shown in Table 5-1. Novec™ 612's GWP is likely to be extremely low (i.e., Novec™ 612 is assumed to have an atmospheric lifetime of approximately 5 days and a GWP of 1), and the carrier gas CO_2 has a GWP value of 1. Sulfur dioxide is not an IR absorber and therefore has no global warming potential. Compared to using SF_6, switching to Novec™ 612 with CO_2 as a carrier gas produces a reduction in overall global warming impact of at least 99.54 percent.[7] Changing the cover gas from SF_6 to SO_2 reduces the global warming impact by 100 percent but introduces a more complex operational scenario due to toxicity concerns. For reasons described below this calculation assumed that no cover gas destruction byproducts were formed.

As described in Section 2 above, single-pass FTIR cells were used in the casting hood, which allowed for accurate measurements down to the 1-10 ppmv level. This allowed for the most accurate measurement of cover gas concentrations and the best estimate for the cover gas destruction factors, but did not allow for the measurement of destruction byproducts at the ppb level. For this reason a "sensitivity analysis" was done assuming that all possible byproducts were detected at their minimum detection limit (see tables 3-1, 3-2, and 3-3). The sensitivity

[7] Please refer to Section 5-3 for a discussion regarding the uncertainty associated with this methodology.

analysis confirmed that, even using a liberal estimate of byproduct formation, byproducts have very little influence on the overall normalized CO_2 equivalent values. The Novec™ 612 cover gas regime exhibited at least a 99.54 percent reduction from SF_6, as it did assuming no byproduct formation.

The above comparison does not include the specific flow rates for each cover gas. In order to provide a more comprehensive analysis of composite GWP, an additional comparison was conducted. Using the ideal gas law, the molecular weights of each gas and the delivery flow rate of the cover gas was used to estimate the composite emission rate in grams per hour (g/hr). This equation can be described as follows:

$$Emission\ Rate\left(\frac{grams}{hour}\right) = ppmv \times MW \times lpm \times \frac{60\ \text{min}}{hour} \div \left(38.6\ liters/mole \times 10^6\right)$$

ppm = measured average concentration in parts per million
MW = molecular weight in grams per mole
lpm = gas flow in liters per minute

These values were multiplied by the appropriate GWP to provide the CO_2 equivalent value that was weighted by the cover gas flow rate. The average flow weighted CO_2 equivalent values were then compared against the corresponding values for the SF_6/CDA system. Based on this approach, Novec™ 612 with CO_2 as a carrier gas was observed to reduce GHG emissions by at least 99.87 percent relative to SF_6. SO_2 was observed to reduce GHG emissions by 100 percent relative to SF_6. Details of the flow-weighted GHG emission impacts are presented in Table 5-3.

A sensitivity analysis was also conducted for the flow rate-weighted CO_2 equivalent values. The normalized CO_2 equivalent values, weighted by cover gas flow rate, for the Novec™ 612 regime exhibited at least a 99.87 percent reduction from SF_6, as it did assuming no byproduct formation.

5.3. Uncertainty Discussion

The results of this measurement study should not be interpreted to represent an absolute analysis of GHG emissions associated with Novec™ 612, SO_2, and SF_6 cover gas usage. While this study does present a relatively accurate measurement analysis and approximate comparison of GHG emissions, there are several areas of uncertainty inherent with this methodology. These areas of uncertainty include FTIR and RGA error, error associated with blending gases, dilution correction, and analytical and operational variation of the ingot casting machine evaluated. The high levels of dilution – on the order of 90 percent – results in significant uncertainty associated with destruction estimates.

Measurements taken by the FTIR and RGA are subject to variability inherent with highly complex analytical equipment. While all prudent steps were taken during the measurement study to minimize this contributor to uncertainty (see Section 2 and Appendix A), a small degree of error is unavoidable.

Table 5-2. Normalized GWP Comparison of Measured Emissions from Inside the Casting Hood

Test Number and Location	Cover Gas Mixture Components	Cover Gas Delivery Conc. [a] (ppmv)	Cover Gas Measured Conc. (ppmv)	GWP Weighted Cover Gas[b]	GWP Weighted CO_2	Normalized CO_2 Equivalent	Average by cover gas	Chg from SF_6 (%)
1CZ	SF_6/CDA	4,241	723.9	17,300,904	0	17,300,904	16,992,448 [c]	
1HZA	SF_6/CDA	4,241	386.3	9,233,008	0	9,233,008		
1HZB	SF_6/CDA	4,241	1,022.7	24,443,433	0	24,443,433		
2CZ	Novec™ 612/CDA/CO_2	2,172	376.6	376.6	97,000	97,376.6	77,638	**>99%**
2HZA	Novec™ 612/CDA/CO_2	2,172	107.3	107.3	36,000	36,107.3		
2HZB	Novec™ 612/CDA/CO_2	2,172	429.4	429.4	99,000	99,429.4		
3CZ	SO_2/CDA	20,000	2,935.7	0	0	0	0.00	**100%**
3HZA	SO_2/CDA	20,000	1,351.1	0	0	0		
3HZB	SO_2/CDA	20,000	3,177.1	0	0	0		

[a] Measured directly at cover gas manifold

[b] GWP weighting based on dilution corrected concentration for the primary cover gas constituent (e.g., Novec™ 612, SF_6)

[c] SF_6 composite GWP baseline estimate for comparison with other tests.

Table 5-3. GWP (Weighted by Cover Gas Flow) Comparison of Measured Emissions from Inside the Casting Hood

Test Number and Location	Cover Gas Mixture Components	Cover Gas Delivery Conc. [a] (ppm)	Cover Gas Measured Conc. (ppm)	GWP Weighted Cover Gas[b] (g/hr)	GWP Weighted CO_2 (g/hr)	Normalized CO_2 GWP Equivalent (g/hr)	Average by cover gas (g/hr)	Chg from SF_6 (%)
1CZ	SF_6/CDA	4,241	723.9	267,059	0	267,059	425,383 [c]	
1HZA	SF_6/CDA	4,241	386.3	276,660	0	276,660		
1HZB	SF_6/CDA	4,241	1,022.7	732,429	0	732,429		
2CZ	Novec™ 612/CDA/CO_2	2,172	376.6	12.6	451.2	463.8	572.6	**>99%**
2HZA	Novec™ 612/CDA/CO_2	2,172	107.3	7.0	325.1	332.1		
2HZB	Novec™ 612/CDA/CO_2	2,172	429.4	27.9	894.0	921.9		
3CZ	SO_2/CDA	20,000	2,935.7	0	0	0	0	**100%**
3HZA	SO_2/CDA	20,000	1,351.1	0	0	0		
3HZB	SO_2/CDA	20,000	3,177.1	0	0	0		

[a] Measured directly at cover gas manifold

[b] GWP weighting based on dilution corrected concentration for the primary cover gas constituent (e.g., Novec™ 612, SF_6)

[c] SF_6 composite GWP baseline estimate for comparison with other tests.

Appendix A – Calibrations and Diagnostic Checks

This section summarizes the on-site FTIR/RGA calibration and diagnostic procedures carried out before and during the sampling tests.

A.1. FTIR Calibrations and System Checks

A series of on-site calibration and system checks was performed on each FTIR and respective sampling system prior to testing to ensure data quality. These checks are described in the remainder of this Section.

A.1.1. FTIR Sample Cell Integrity Checks

The integrity of each FTIR sample cell was confirmed prior to sampling by (1) drawing a terminal vacuum of < 200 torr, then (2) sealing off the sample cell while still under vacuum, then (3) monitoring any pressure rise (i.e., leak rate) within the cell by observing its pressure transducer reading over a several-minute period. A cell was considered leak-tight when a leak rate of < 2 torr min^{-1} was observed. The evacuated pressure on each FTIR sample cell did not rise above measurable values over a 1-min period.

A.1.2. Infrared Detector Linearity Checks

For best results, the IR detector in each FTIR system must yield a linear response throughout the measurement absorbance ranges within the measurement frequency range of all sample spectra. An electronic linearizer circuit was used to continuously adjust the MCT detector preamp signal to achieve the desired linear response. To optimize the linearizer, background spectra were acquired with and without a polystyrene film in the IR beam. Comparison of the strongly absorbing polystyrene bands in the low-, mid-, and high-frequency regions against a clean background enables the user to appropriately set the linearizer trimpot. This procedure was run prior to the start of testing for each FTIR detector, and subsequent spectra were periodically visually checked to confirm that linearity was maintained.

A.1.3. Noise Equivalent Absorbance (NEA, or Signal-to-Noise Ratio) Tests

NEA tests provide a measure of system noise – more specifically, the sensitivity of the instrument at the specified spectral resolution (in this case, 0.5 cm^{-1}) and number of co-added spectra (in this case, 64, or 2 min of signal averaging). A two-min FTIR spectral background was recorded while the sample cell was purged with dry nitrogen. A subsequent "sample" spectrum was recorded while the cell was still under nitrogen purge immediately after the background recording. The two spectra were ratioed to provide a snapshot of instrumental noise. The NEAs of all three FTIR systems were well below 0.001 absorbance units across all measurement frequencies prior to sampling, which enabled instrument-limited quantitative

analysis sensitivities in the 1-100ppmv range (and a factor of 100 better for the long path FTIR cell) to be achieved for all compounds of interest.

A.1.4. Path Length

The sample cells utilized for this study were geometrically fixed with an FTIR cold zone system path length of 0.15 m and a hot zone(s) system path length of 0.1 m. The worker exposure FTIR system contained an adjustable multi-pass White cell that was aligned, set, and calibrated at a path length of 8 m.

A.1.5. Spectrometer Frequency and Resolution Checks

A real-time check of frequency position and resolution was performed at each FTIR prior to and directly following each round of testing. These checks were performed by monitoring a specific water absorption band present in ambient air. The position of this line must not deviate more than ± 0.005 cm^{-1} from the reference value over the course of each test. Likewise, the linewidth of this band, which is directly related to instrument resolution, must not deviate more than ± 0.05 cm^{-1} from the reference value over the course of each test.

A.1.6. Spectral Background

A spectral background is essentially a "blank spectrum" in that it does not contain any of the target compounds normally present in the sample. It was created by purging each cell with either ambient air or ultra-high-purity (UHP) nitrogen while recording a spectrum. This spectrum was then used by the analytical software to ratio against each sample spectrum to produce an absorbance spectrum for quantitative analysis. A new spectral background was generated each day prior to testing.

A.2. RGA Calibrations and System Checks

A series of on-site system checks was performed on the RGA and sampling system prior to and during sampling to ensure high data quality. These checks and calibrations are described in the remainder of this Section.

A.2.1. Sample Inlet and Mass Analyzer Chamber Pressures

Pressure was continuously monitored in the mtorr range via a thermocouple gauge within the sample inlet chamber, which is considered to be the high pressure side of the chamber aperture (see block diagram, Figure 2-2). The sample inlet chamber was directly interfaced to the venturi pump-driven sample extraction line. The venturi pumping speed and valve orifice maintained a constant pressure of 5×10^{-3} torr within the sample inlet chamber. Given a fixed chamber aperture previously installed at URS, the 5×10^{-3} torr constant sample inlet chamber pressure created a 5×10^{-5} torr total pressure within the mass analyzer chamber. Pressures were continuously monitored by cold cathode gauge. When isolated from the sample inlet, total

background chamber pressures (~5 x 10^{-8} torr) were 2-3 orders of magnitude less than this mass analyzer chamber total pressure. These pressures allowed RGA sensitivities for neon of ~100 ppmv at m/e = 20, as previously mentioned in Section 2.2.2.

Appendix B – Measurement Study Protocol

The analytical measurement and data interpretation approach described herein attempts to determine, by empirical means, the most conservative cover gas destruction possible for a given type of magnesium process tool and gas flow ranges used during production. This approach is based on the experience from the AMACOR study and pertains to only those processes that can allow typical operation and cover gas flow without molten metal in place, as well as normally with molten metal. Therefore, ingot casting and chilling machines are prime candidates for this approach, as opposed to alloying and die casting crucibles which are often kept under constant high temperatures and filled with metal. The approach encompasses all the measurement variance brought about by the process gas flows (including turbulence invoked by ambient air dilution) in conjunction with analytical instrument and sampling variability. The variances associated with each measurement condition needed in calculating the degradation factor are then properly propagated through the calculations to the final result. The maximum destruction factor is thus considered by adding the propagated variance to the final calculation result. If the process under study is normally run over a range of cover gas concentrations, this measurement approach is to be conducted at both the lowest concentration and highest concentration of that range; the reportable maximum destruction factor is then the greater of the two.

The Test Plan outlines how the experimental observables and variances needed to determine the maximum degradation factors are obtained. The Quantitative Data Analysis section describes how the measurements are used to estimate destruction factors and how the variances are propagated. A hypothetical example is provided to help illustrate the measurement approach.

Test Plan

1. Set up a real-time measurement instrument to continuously extract and analyze a low volume slipstream of the completely blended cover gas mixture prior to injection into the melt protection area. The extractive analysis technique should not significantly impact the overall gas flow within normal process operations, and allow enough consecutively recorded measurements as to be statistically relevant. For instance, an extractive FTIR system monitoring SF_6 concentrations over one-minute of signal averaging will produce 240 data points within a four-hour continuous sampling period.

2. Set up a second real-time measurement instrument to continuously extract and analyze a low volume stream of cover gas within the process environment (i.e., where molten magnesium is to be covered during casting or chilling). The extractive analysis technique at this sample location should not significantly impact the overall gas flow throughout the process environment, should allow the most representative sampling configuration possible (for instance, equidistant perforated sample probes that traverse the entire width of process head space a few centimeters from the molten metal surfaces), and also allow enough consecutively recorded measurements as to be statistically relevant. This instrument will be sampling coincidentally with the instrument described in step #1, so the implementation of two identical analysis techniques (for instance, two extractive FTIR systems) is ideal.
3. *With molten magnesium present during production*: Simultaneously monitoring both sampling locations over a sufficiently long time period will produce a mean concentration during metal production at the point of cover gas injection, MP^i, and a mean concentration during metal production within the process environment, MP^e. Also, the 99 percent confidence level of both means, which when expressing as +/- values about the means would contain virtually all sources of indeterminate measurement error, can be estimated as 2.58 times the standard deviations (divided by the square root of the number of measurements) of their respective data sets. Hence, the experimentally determined MP^i / MP^e would carry associated $\sigma_{MP}{}^i$ / $\sigma_{MP}{}^e$ as total measurement uncertainties (the squares of which being measurement variances) to be considered when calculating degradation percentages.
4. *With molten magnesium not present during mock production*: Simultaneously monitoring both sampling locations under the same configurations and over a similar length of time as conducted in step #3 will produce, under nonmetal process conditions, an experimentally determined NP^i / NP^e pair and associated $\sigma_{NP}{}^i$ / $\sigma_{NP}{}^e$ measurement uncertainties. These are needed to effectively estimate the amount of ambient air dilution present in an open process.
5. Steps #3 and #4 are to be repeated as necessary over the cover gas concentration ranges utilized during normal production, presumably since the degradations may be significantly different depending on mixture ratios. This typically means an experimental

pair will be run at the lowest and the highest operating concentration, with the highest destruction percentage reported to be conservative.

6. Standard analytical measurement protocols, pertaining to the technique of choice, must be run to characterize instrumental accuracy and reproducibility for each experiment (in effect, any determinate errors associated with the instruments are quantified). Typically, this means a pre-test and post-test calibration run for all instruments to ensure accurate and consistent measurements at both sampling locations for each metal/nonmetal test condition.

Quantitative Data Analysis

- For the noncasting sampling period, the reduction of injected cover gas concentrations represents only the ambient air dilution in the system because molten magnesium is not present to react with the cover gas. Therefore,

$$Dilution = 1 - \frac{NP^e}{NP^i}$$

- For the casting or metal present sampling period, the reduction of injected cover gas concentrations represents the ambient air dilution *plus* destruction in the system, for molten magnesium is present. Therefore,

$$[Degradation + Dilution] = 1 - \frac{MP^e}{MP^i}$$

- To determine solely the destruction factor, DF:

$$DF = [Degradation + Dilution] - Dilution = \frac{NP^e}{NP^i} - \frac{MP^e}{MP^i} \qquad (1)$$

- Since the sum of relative variances for each ratio yields the relative variance of the result for each ratio in (1), and the sum of absolute variances for each term in (1) yields the absolute variance of the difference of terms[8], the variances of equation (1) can be propagated and simplified to produce the variance associated with the destruction factor:

$$\sigma_{DF}{}^2 = \left(\frac{\sigma_{NP^e}}{NP^i}\right)^2 + \left(\frac{NP^e \sigma_{NP^i}}{NP^{i\,2}}\right)^2 + \left(\frac{MP^e \sigma_{MP^i}}{MP^{i\,2}}\right)^2 + \left(\frac{\sigma_{MP^e}}{MP^i}\right)^2$$

Hence, the measurement uncertainty for DF is:

$$\sigma_{DF} = \left[\left(\frac{\sigma_{NP^e}}{NP^i} \right)^2 + \left(\frac{NP^e \sigma_{NP^i}}{NP^{i2}} \right)^2 + \left(\frac{MP^e \sigma_{MP^i}}{MP^{i2}} \right)^2 + \left(\frac{\sigma_{MP^e}}{MP^i} \right)^2 \right]^{1/2} \qquad (2)$$

Example

The noncasting sampling period produced mean SF_6 concentrations of 1000 ppmv and 500 ppmv for the cover gas injection point and process environment, respectively. The 99 percent confidence limit (basically, a multiple of the standard deviation) was 50 ppmv for each. The subsequent metal sampling period produced mean SF_6 concentrations of 1000 ppmv and 400 ppmv for the cover gas injection point and process environment, respectively. The 99 percent confidence limit was also 50 ppmv for each. To summarize,

NP^i = 1000 ppmv; $\sigma_{NP^i} = \pm 50$ ppmv

NP^e = 500 ppmv; $\sigma_{NP^e} = \pm 50$ ppmv

MP^i = 1000 ppmv; $\sigma_{MP^i} = \pm 50$ ppmv

MP^e = 400 ppmv; $\sigma_{MP^e} = \pm 50$ ppmv

The destruction factor, DF, for SF_6 can thus be computed via equation (1):

$$DF = \frac{NP^e}{NP^i} - \frac{MP^e}{MP^i} = \frac{500}{1000} - \frac{400}{1000} = 0.1$$

And the DF uncertainty is derived from (2):

$$\sigma_{DF} = \left[\left(\frac{50}{1000} \right)^2 + \left(\frac{500*50}{1000^2} \right)^2 + \left(\frac{400*50}{1000^2} \right)^2 + \left(\frac{50}{1000} \right)^2 \right]^{1/2} = 0.078$$

Meaning, the DF for SF_6 has been empirically determined as 10(±7.8) percent, so a conservative DF estimate of 17.8 percent would be considered.

[8] *Principles of Instrumental Analysis*, D. A. Skoog, 3rd Ed., 1985.