Best Management Practices Plan for Exploration Drilling in Alaska Outer Continental Shelf, Chukchi Sea on the M/V *Noble Discoverer*

Final: April 2015

Version: 2015-1

This page intentionally left blank.

Table of Contents

1. SHELL EXPLORATION PROGRAM 1
1.1 SUB-CONTRACTS 1
1.2 EXPLORATION WELLS 1
2. BMP PLAN DEVELOPMENT AND IMPLEMENTATION 5
2.1 IMPLEMENTATION 5
2.2 GENERAL REPORTING 5
2.3 POLICY STATEMENT 6
2.4 BMP PLAN COMMITTEE 6
2.5 BMP CERTIFICATION STATEMENT 6
3. FACILITY SECURITY AND VESSEL SUPPORT 9
3.1 FACILITY DESCRIPTION 9
3.2 PLANNED VESSEL SUPPORT 9
4. WASTE DISCHARGE MANAGEMENT 11
4.1 EFFLUENT DISPOSAL 11
4.2 DISCHARGES COVERED BY BMP PLAN 11
4.3 DISCHARGE SECURITY 12
4.4 DISCHARGE VOLUMES BY METHOD, EQUIPMENT AND LOCATION 13
4.4.1 D001 Water Based Drilling Fluids and Drill Cuttings: 13
4.4.2 D002 Deck Drainage: 13
4.4.3 D003 Sanitary Waste: 13
4.4.4 D004 Domestic Waste: 14
4.4.5 D005 Desalination Unit Waste: 14
4.4.6 D006 Blowout Preventer Fluid: 14
4.4.7 D007 Boiler Blowdown: 14
4.4.8 D008 Fire Control System Test Water: 15
4.4.9 D009 Non-contact Cooling Water: 15
4.4.10 D010 Uncontaminated Ballast Water: 15
4.4.11 D011 Bilge Water: 16
4.4.12 D012 Excess Cement Slurry: 16
4.4.13 D013 Muds, Cuttings, Cement on the Seafloor: 16
4.5 DISCHARGE MONITORING REPORTS 18
4.6 DISCHARGE REPORTING AND NOTIFICATIONS 18
5. DRILLING FLUIDS AND SOLIDS CONTROL OPERATION 19
5.1 SOLIDS CONTROL EQUIPMENT AND OPERATION 19
5.2 DRILLING FLUID PIT SYSTEM 20
5.3 ACTIVE AND RESERVE PITS 20
5.4 SHALE SHAKERS AND SAND TRAPS 21
5.5 DEGASSER AND DISCHARGE PITS 21
6. DRILLING FLUIDS MANAGEMENT 23
6.1 PIT CLEANOUT 23
6.2 PIT MAINTENANCE AND OPERATION 24
6.3 DRILLING FLUID PIT SYSTEM INSPECTIONS 24
6.4 SOLIDS CONTROL EQUIPMENT MANAGEMENT PRACTICES 25
6.4.1 Shale Shakers 26
6.4.2 Fines Removal Equipment 26
6.5 SCE INSPECTIONS 27

CAUTION: All hardcopies of "Controlling Document" are uncontrolled. When using this document verify that the revision matches the revision in the controlled version found on Livelink®.

7. OPERATING PRACTICES FOR REGULATED DISCHARGES 28
7.1 WATER-BASED DRILLING FLUIDS AND DRILL CUTTINGS (DISCHARGE 001) 28
7.2 DECK DRAINAGE (DISCHARGE 002) 28
7.3 SANITARY WASTEWATER (DISCHARGE 003) 29
7.4 DOMESTIC WASTEWATER (DISCHARGE 004) 30
7.5 DESALINATION UNIT AND EVAPORATOR COOLING WASTES (DISCHARGE 005) 31
7.6 BLOWOUT PREVENTER FLUID (DISCHARGE 006) 31
7.7 BOILER BLOWDOWN (DISCHARGE 007) 31
7.8 FIRE CONTROL SYSTEM TEST WATER (DISCHARGE 008) 32
7.9 NON-CONTACT COOLING WATER (DISCHARGE 009) 32
7.10 UNCONTAMINATED BALLAST WATER (DISCHARGE 010) 32
7.11 BILGE WATER (DISCHARGE 011) 32
7.12 EXCESS CEMENT SLURRY (DISCHARGE 012) 32
7.13 MUDS, CUTTINGS AND CEMENT AT SEAFLOOR (DISCHARGE 013) 33

8. HOUSEKEEPING PRACTICES 35
8.1 WASTE MINIMIZATION PRACTICES (WMP) 35
8.2 WORK AREAS 35
8.3 VESSEL HOUSEKEEPING 36
8.4 LOADING STATIONS 36
8.5 MATERIAL COMPATIBILITY AND STORAGE 36
8.6 CHEMICAL PRODUCT HANDLING 37

9. PREVENTATIVE MAINTENANCE AND OPERATION 39
9.1 COOLING WATER INTAKE 39
9.2 DECK DRAINAGE PROCESSOR 39
9.3 OIL / WATER SEPARATORS 39
9.4 LUBRICATING OIL PURIFICATION UNITS 39
9.5 CHEMICAL STORAGE AREAS 40
9.6 EQUIPMENT SPILLAGE AND LEAK PREVENTION 40
9.7 PIPE DOPE 40
9.8 LOSS OF DRILLING FLUID 40
9.9 CATHODIC PROTECTION 40

10. EQUIPMENT FAILURE & REPAIR 41
10.1 EQUIPMENT FAILURE OR DISCHARGE LIMIT EXCEEDED 41
10.2 EQUIPMENT REPAIR / SERVICING (PREVENTATIVE MAINTENANCE) 42
10.2.1 Shale Shaker 42
10.2.2 High-Speed Centrifuge 42
10.3 DETAILED CONTINGENCY AND DRILLING FLUIDS AND CUTTINGS CONTAINMENT PLAN 42
10.4 MATERIALS HANDLING AND RECORDS/ EQUIPMENT FAILURE/DISCHARGE RECORDS 42
10.4.1 Contingency Plan Records 43
10.4.2 Waste Manifest Records 43

11. DOCUMENTATION AND RECORDKEEPING 45
11.1 REQUIRED REPORTING 45
11.2 HOUSEKEEPING REPORTING 46
11.3 NON-COMPLIANCE OR CHANGE IN DISCHARGE TOXICITY NOTIFICATIONS 47
11.4 ASSOCIATED DOCUMENTATION AND MANUALS 47
11.5 RECORDS RETENTION 47

12. TRAINING 49
12.1 TRAINING PROGRAMS 49
12.2 TRAINING RECORDS 50

CAUTION: All hardcopies of "Controlling Document" are uncontrolled. When using this document verify that the revision matches the revision in the controlled version found on Livelink®.

13. REFERENCED DOCUMENTS 51
13.1 REFERENCED PLANS AND DOCUMENTS 51
13.2 SAFETY DATA SHEETS 52
14. BMP PLAN MODIFICATION & ANNUAL REVIEW 53
14.1 CERTIFICATION AND ANNUAL REVIEW REQUIREMENTS 53
14.2 EVALUATION AND RE-EVALUATION OF BMP PLAN 53
14.3 MODIFYING THE BMP PLAN 53
14.4 FEEDBACK RECORDS AND CONTINUOUS IMPROVEMENT 54
14.5 DOCUMENTATION OF MODIFICATIONS 54

CAUTION: All hardcopies of "Controlling Document" are uncontrolled. When using this document verify that the revision matches the revision in the controlled version found on Livelink®.

Tables

Title **Page**

Best Management Plan – Permit by Reference Table I
Chukchi Sea General Permit No.: AKG-28-8100 *Noble Discoverer* BMP Revision Summary Table 1
Table 1-1 Operating Company 1
Table 1-2 Shell Exploration Wells 2
Table 2-1 BMP Committee Signatures 7
Table 4-1 Waste Discharges by Type, Equipment, Method and Locations 17
Table 11-1 Reporting Tables 45
Table 11-2 Discharges with Cuttings 45
Table 11-3 Discharges without Cuttings 46
Table 12-1 BMP Training Programs 50
Table 13-1 Documents Reference 51

Figures

Title **Page**

Figure 1-1 Exploration Drilling Program Location 3

CAUTION: All hardcopies of "Controlling Document" are uncontrolled. When using this document verify that the revision matches the revision in the controlled version found on Livelink®.

Acronyms List

AAR	after action review(s)
ACM	Alaska Compliance Manual
API RP 13C	American Petroleum Institute standard physical testing of shaker screens
bbl(s)	barrel(s)
BMP	Best Management Practices
BOP	blowout preventer
CFR	Code of Federal Regulations
DEC	(Alaska) Department of Environmental Conservation
DMR	Discharge Monitoring Report
DWOP	"drill (the) well on paper"
ECM	Environmental Compliance Manual
EPA	US Environmental Protection Agency
HSE	health, safety and environment
LWI(s)	local work instruction(s)
M/V	motor vessel
MARPOL	International Convention for the Prevention of Pollution from Ships
MARSEC	Maritime Security
MSD	marine sanitation device
MSDS	Material Safety Data Sheets
Noble Discoverer	M/V *Noble Discoverer*
NOI	Notice of Intent
NPDES	National Pollution Discharge Elimination System
NPDES GP	General Permit for the authorization to discharge under the NPDES Oil and Gas Exploration Facilities on the Outer Continental Shelf (AKG-28-8100)
OCS	Outer Continental Shelf
OSR	oil spill response
OWS	oil /water separator
PMI	preventative maintenance instructions
POB	persons/individuals on-board
PPE	personal protective equipment

CAUTION: All hardcopies of "Controlling Document" are uncontrolled. When using this document verify that the revision matches the revision in the controlled version found on Livelink®.

Acronyms List (Continued)

PTW(s)	permit(s) to work
QAPP	Quality Assurance Project Plan
SCE	solids control equipment
SDS	Safety Data Sheets
Shell	Shell Gulf of Mexico, Inc.
SOPs	standard operating procedures
SPM	Safety Policy Manual
SPP	solid particulate phase
WMP	Waste Management Plan, waste minimization practices

CAUTION: All hardcopies of "Controlling Document" are uncontrolled. When using this document verify that the revision matches the revision in the controlled version found on Livelink®.

Best Management Plan – Permit by Reference Table

Permit Citation	Permit Special Conditions: Best Management Practices Plan Requirements	Plan Section
Page 18 II.A.12.c.	The calculations of maximum concentrations must be based on the amount of chemical additives added to the volume of the waste stream discharged. The permittee must include the chemical additive implementation procedures, calculation methods, record keeping and reporting procedures in the BMP Plan.	Drilling Fluids Plan, documentation & Recordkeeping – Section 11
Page 50 II.N.3.	Best Management Practices for All Facilities. New facilities that do not meet the threshold requirements regarding the amount of water withdrawn or percentage of water withdrawn for cooling water purposes in subsection N.1. above, and existing facilities, are required to implement best management practices to minimize the impingement mortality and entrainment of all life stages of fish and shellfish in accordance with the Best Management Practices Plan requirements, Section IV.B.5. New facilities that meet the threshold requirements are also are required to implement the Best Management Practices Plan requirements, Section IV.B.5., in addition to the other Cooling Water Intake Structure Requirements in Attachment 3 of this general permit.	**Not Applicable**; Cooling Water Intake Structure – Section 9.1
Page 56 IV.B.1.	The permittee must develop and implement a BMP Plan which achieves the objectives and specific requirements listed below. The permittee must operate the exploratory facility in accordance with its current BMP Plan or in accordance with subsequent amendments to the BMP Plan. The permittee must ensure that the BMP Plan incorporates practices to achieve the objectives and specific requirements listed below. The BMP Plan must be submitted with the Notice of Intent (NOI).	BMP Plan Development and Implementation – Section 2
IV.B.2.	The permittee must certify and notify the Director in writing that the BMP Plan is on-site at least 7 days prior to any authorized discharge under this general permit. The certification must identify the NPDES permit number and be signed in accordance with the Signatory Requirements of Section VI.E.	Certification Statement - Section 2.3
IV.B.3	Through implementation of the BMP Plan, the permittee must: a. Prevent or minimize the generation and the potential for the release of pollutants from the exploratory facility to the waters of the United States through normal operations and ancillary activities; and	Discharge Management- Section 4.3
	b. Ensure that methods of pollution prevention, control, and treatment will be applied to all wastes and other substances discharged.	Regulated Discharges- Section 7

CAUTION: All hardcopies of "Controlling Document" are uncontrolled. When using this document verify that the revision matches the revision in the controlled version found on Livelink®.

Best Management Plan – Permit by Reference Table

Permit Citation	Permit Special Conditions: Best Management Practices Plan Requirements	Plan Section
IV.B.4 Page 56-57	The permittee must develop and amend the BMP Plan consistent with the following objectives for the control of pollutants. a. The number and quantity of pollutants and the toxicity of effluent generated, discharged or potentially discharged at the exploratory facility must be minimized by the permittee to the extent feasible by managing each waste stream in the most appropriate manner.	Discharge Management- Section 4.1
	b. Under the BMP Plan, and any Standard Operating Procedures included in the BMP Plan, the permittee must ensure proper operation and maintenance of the exploratory facility.	Fluids Management - Section 6, Operating Practices – Section 7
	c. The permittee must establish specific objectives for the control of pollutants by conducting the following evaluations. 1. Each facility component or system must be examined for its waste minimization opportunities and its potential for causing a release of significant amounts of pollutants to waters of the United States due to equipment failure, improper operation, and natural phenomena such as rain or snowfall, etc. The examination must include all normal operations and ancillary activities including loading or unloading operations or spillage or leaks.	Preventative Maintenance and Operation – Section 9
	2. Where experience indicates a reasonable potential for equipment failure, natural condition (e.g., precipitation), or other circumstances to result in significant amounts of pollutants reaching surface waters, the Plan should include a prediction of the direction, rate of flow and total quantity of pollutants which could be discharged from the facility as a result of each condition or circumstance.	Equipment Failure & Repair – Section 10
IV.B 5. Page 57	The BMP Plan must be consistent with the objectives listed above and the general guidance contained in the publication entitled Guidance Manual for Developing Best Management Practices (BMPs) (USEPA, EPA 833-B-93-004, 1993) or any subsequent revisions to the guidance document. The BMP Plan must: a. Be written in narrative form and must include any necessary plot plans, drawings or maps, and must be developed in accordance with good engineering practices. The BMP Plan must be organized and written with the following structure:	BMP Plan, Appendices, and Referenced Documents – Section 13

CAUTION: All hardcopies of "Controlling Document" are uncontrolled. When using this document verify that the revision matches the revision in the controlled version found on Livelink®.

Best Management Plan – Permit by Reference Table

Permit Citation	Permit Special Conditions: Best Management Practices Plan Requirements	Plan Section
IV.B.5. Page 57-58	1. Name and location of the facility.	Exploration Program –Section 1
	2. Statement of BMP policy.	BMP Policy - Section 2.1
	3. Structure, functions, and procedures of the BMP Committee which is responsible for developing, implementing and maintaining the BMP Plan.	BMP Plan Development and Implementation - Section 2
	4. Specific management practices and standard operating procedures to achieve the above objectives, including, but not limited to, the following: i. modification of equipment, facilities, technology, processes, and procedures,	Discharge Management – Section 4.1, Operating Practices for Regulated Discharges – Section 7
	ii. reformulation or redesign of products,	
	iii. substitution of materials, and	
	iv. improvement in management, inventory control, materials handling or general operational phases of the facility.	
	5. Risk identification and assessment.	Facility Security and Vessel Support – Section 3
	6. Reporting of BMP incidents. The written reports must include a description of the circumstances leading to the incident, corrective actions taken and recommended changes to operating and maintenance practices and procedures to prevent recurrence.	Equipment Failure & Repair – Section 10, Documentation and Recordkeeping – Section 11, Training – Section 12
	7. Materials compatibility.	Discharge Management - Section 4.1
	8. Good housekeeping.	Housekeeping -Section 8
	9. Preventative maintenance.	Preventive Maintenance - Section 9
	10. Inspections and records.	Documentation – Sections 4.6 and 11.3
	11. Security.	Discharge Management – Section 4.3
	12. Employee training.	Training - Section 12

CAUTION: All hardcopies of "Controlling Document" are uncontrolled. When using this document verify that the revision matches the revision in the controlled version found on Livelink®.

Best Management Plan – Permit by Reference Table

Permit Citation	Permit Special Conditions: Best Management Practices Plan Requirements	Plan Section
IV.B.5. Page 58-59	b. Include the following provisions concerning BMP Plan review: 1. Annual review by exploratory facility engineering staff and the exploratory facility manager.	BMP Plan Modification & Annual Review– Section 14
	2. Annual review and endorsement by the permittee's BMP Committee.	
	3. Include a statement that the above annual reviews have been completed and that the BMP Plan fulfills the requirements set forth in this permit. The statement shall be certified by the dated signatures of each BMP Committee member as certification of the annual reviews.	BMP Plan Certification Statement- Section 2.3
	4. The permittee must submit a copy of the annual certification statement to the Director with the December DMR.	
	c. Establish specific best management practices to meet the objectives identified above, addressing each component or system capable of generating or causing a release of significant amounts of pollutants, and identifying specific preventative or remedial measures to be implemented.	Equipment Failure & Repair – Section 10
	d. Establish specific best management practices or other measures which ensure that the following specific requirements are met: 1. Ensure proper management of solid and hazardous waste in accordance with the regulations promulgated under the Resource Conservation and Recovery Act (RCRA). Management practices required under RCRA regulations shall be referenced in the BMP Plan.	Discharge Management – Section 4.1, Operating Practices – Section 7.2, Referenced Documents – Section 13
	2. Reflect requirements for oil spill response plans under 30 CFR Part 254 and 33 CFR Part 154 and may incorporate any part of such plans into the BMP Plan by reference.	
	3. Reflect requirements for storm water control under Section 402(p) of the Act and the regulations at 40 CFR 122.26 and 122.44, and otherwise eliminate to the extent practicable, contamination of storm water runoff.	

CAUTION: All hardcopies of "Controlling Document" are uncontrolled. When using this document verify that the revision matches the revision in the controlled version found on Livelink®.

Best Management Plan – Permit by Reference Table

Permit Citation	Permit Special Conditions: Best Management Practices Plan Requirements	Plan Section
IV.B.5.d. Page 59	4. Reflect requirements for air emissions under applicable state and federal air quality regulations and permits.	Referenced Documents - Section 13
	5. Identify chemical additive inventory procedures (i.e., implementation procedures, calculation methods, record-keeping and reporting procedures) to ensure compliance with the Section II.A.12. of this general permit.	Drilling Fluids Plan (DFP)
	6. Select and implement cooling water intake structure design and construction technologies or operational measures for minimizing impingement mortality and entrainment of fish and shellfish.	Preventative Maintenance – Section 9
	7. Ensure that intake/exchange activities minimize the risk of introducing non-indigenous/invasive species to the Chukchi Sea.	Operating Practices – Section 7.10
IV.B.5 Page 59-60	e. Include the following specific BMPs: 1. Ensure that solid, sludges, or other pollutants removed in the course of treatment or control of water and wastewaters are disposed of in a manner such as to prevent any pollutant from such materials from entering navigable waters.	Discharge Management- Section 4
	2. Separate used motor oil from deck drainage collection systems.	**Not Applicable**
	3. Minimize wastewater treatment system upsets by the controlled usage of deck drainage washdown detergents and of ice prevention materials to ensure worker safety on decks and work areas.	Deck Drainage - Section 7.2
	4. Reduce oil spillage and oil leaks from pump bearings and seals through the use of good prevention techniques such as drip pans and other handling and collection methods.	Preventative Maintenance - Section 9
	5. If oil is used as a spotting fluid, careful attention to the operation of the drilling fluid system could result in the segregation from the main drilling fluid system of the spotting fluid and contaminated drilling fluid. Once segregated, the contaminated drilling fluid can be disposed of in an environmentally acceptable manner.	**Not Applicable**

CAUTION: All hardcopies of "Controlling Document" are uncontrolled. When using this document verify that the revision matches the revision in the controlled version found on Livelink®.

Best Management Plan – Permit by Reference Table

Permit Citation	Permit Special Conditions: Best Management Practices Plan Requirements	Plan Section
IV.B.5.e. Page 60-61	6. When possible, substitute standard drill pipe threading compound (pipe dope) with "toxic metals free" pipe dope.	Preventative Maintenance - Section 9
	7. Careful application of standard drill pipe dope to minimize contamination of receiving water and drilling fluids.	
	8. Substitute diesel oil with less toxic mineral oil or synthetic based material in drilling fluid applications.	Drilling Fluids Plan
	9. When possible, substitute standard drilling fluid additives with less toxic additives.	
	10. Careful handling of drilling fluid materials and treatment chemicals to prevent spills.	Housekeeping Practices - Section 8.2
	11. Use of local containment devices such as liners, dikes and drip pans where chemicals are being unpackaged and where wastes are being stored and transferred.	Housekeeping Practices - Section 8.3
	12. Install treatment devices for deck drainage to reduce or remove pollutants in the discharges (e.g., deck drainage processor, oil/water separators, sediment tanks/basins, or detention ponds).	Deck Drainage – Section 7.2
	13. Maintain proper cathodic protection to prevent the corrosion of the ship's hull.	Cathodic Protection – Section 9.8
IV.B.6. Page 60	The permittee shall maintain a copy of the BMP Plan at the exploratory facility.	BMP Plan Development and Implementation - Section 2
IV. B.7.	The permittee shall amend the BMP Plan whenever there is a change in the exploratory facility or in the operation of the exploratory facility that materially increases the generation of pollutants or their release or potential release to the receiving waters. The permittee must also amend the BMP Plan, as appropriate, when facility operations covered by the BMP Plan change. Any such changes to the BMP Plan must be consistent with the objectives and specific requirements listed above. Any changes to the BMP Plan must be reported to the Director in writing.	BMP Plan Modification and Annual Review - Section 14

CAUTION: All hardcopies of "Controlling Document" are uncontrolled. When using this document verify that the revision matches the revision in the controlled version found on Livelink®.

Best Management Plan – Permit by Reference Table

Permit Citation	Permit Special Conditions: Best Management Practices Plan Requirements	Plan Section
IV.B.8. Page 61	All changes in the BMP Plan must be reviewed by the exploratory facility engineering staff, exploratory facility manager and the BMP Committee. The amended BMP Plan must include a certified statement that the above reviews have been completed and that the BMP Plan fulfills the requirements set forth in this general permit. The certified statement must include the dated signatures of each BMP Committee member as certification of the reviews of the amended BMP Plan. All changes in the BMP Plan must be reported to the Director in writing with the annual certification required under Paragraph B.5.b. above. The permittee must submit a copy of the certified statement and a report of all changes in the BMP Plan to the Director and DEC with the December DMR.	BMP Plan Development and Implementation – Section 2

CAUTION: All hardcopies of "Controlling Document" are uncontrolled. When using this document verify that the revision matches the revision in the controlled version found on Livelink®.

This page intentionally left blank

Chukchi Sea General Permit No.: AKG-28-8100
***Noble Discoverer* BMP Revision Summary Table**

Revision Number	Revision Date	Revision Reason

CAUTION: All hardcopies of "Controlling Document" are uncontrolled. When using this document verify that the revision matches the revision in the controlled version found on Livelink®.

This page intentionally left blank

1. Shell Exploration Program

This section identifies Shell Gulf of Mexico, Inc. (Shell) as the operator for the Chukchi Sea Exploration Program and as holding the Notice of Intent for Authorization to Discharge under the National Pollutant Discharge Elimination System (NPDES) for Oil and Gas Exploration Facilities on the Outer Continental Shelf in the Chukchi Sea, Alaska, General Permit (GP) AKG-28-8100.

1.1 Sub-Contracts

Shell has contracted with Noble Drilling Holding, LLC (Noble) as the owner of the drillship M/V (Motor Vessel) *Noble Discoverer* (*Noble Discoverer*), for operations of the vessel during transit and while Chukchi Sea exploration activities are being conducted. Noble has specific corporate policies in place that provide for training manuals and programs related to safety & environmental risk assessments and compliance tracking systems applicable to all oil and gas exploration operations. The location of the exploration program is shown in Figure 1-1, Exploration Drilling Program Location. Other diagrams and figures showing operations and maintenance of all discharges: *Noble Discover* Discharge Locations (Outfalls) Starboard Side (Figure 1-2), Discharge Locations (Outfalls) Port Side (Figure 1-3) and Visual Observation Locations (Figure 1-4) are provided in Appendix A.

Facility location, permittee name, and facility (rig) owner are listed in Table 1-1 below:

Table 1-1 Operating Company

Facility Location	Burger Prospects of the Chukchi Sea. Well locations per lease block are specified in Table 1-2.
NPDES General Permit Number	NPDES GP (AKG-28-8100) effective November 28, 2012
NPDES Permittee	Shell Gulf of Mexico, Inc. (Shell)
Facility (Rig) Owner	Noble Drilling Holding, LLC (Noble)
Facility Name	M/V *Noble Discoverer*

1.2 Exploration Wells

Shell currently plans to drill four exploratory wells in the Burger Prospect of the Chukchi Sea. The prospect location is depicted in Figure 1-1 and specific well locations are identified in Table 1-2.

CAUTION: All hardcopies of "Controlling Document" are uncontrolled. When using this document verify that the revision matches the revision in the controlled version found on Livelink®.

Table 1-2 Shell Exploration Wells

Wells Covered by Plan	Area	Lease Block (Surface)	Surface Locations (NAD 83)*		OCS-Y Number
			Latitude (N)	Longitude (W)	
Burger F	Posey	6714	71° 20' 13.96"	163°12' 21.75”	OCS-Y-2267
Burger J	Posey	6912	71° 10' 24.03"	163°28' 18.52”	OCS-Y-2321
Burger S	Posey	6762	71° 19' 25.79"	163°28' 40.84”	OCS-Y-2278
Burger V	Posey	6915	71° 10' 33.39"	163°04' 21.23”	OCS-Y-2324

* North American Datum 1983

CAUTION: All hardcopies of “Controlling Document” are uncontrolled. When using this document verify that the revision matches the revision in the controlled version found on Livelink®.

Figure 1-1 Exploration Drilling Program Location

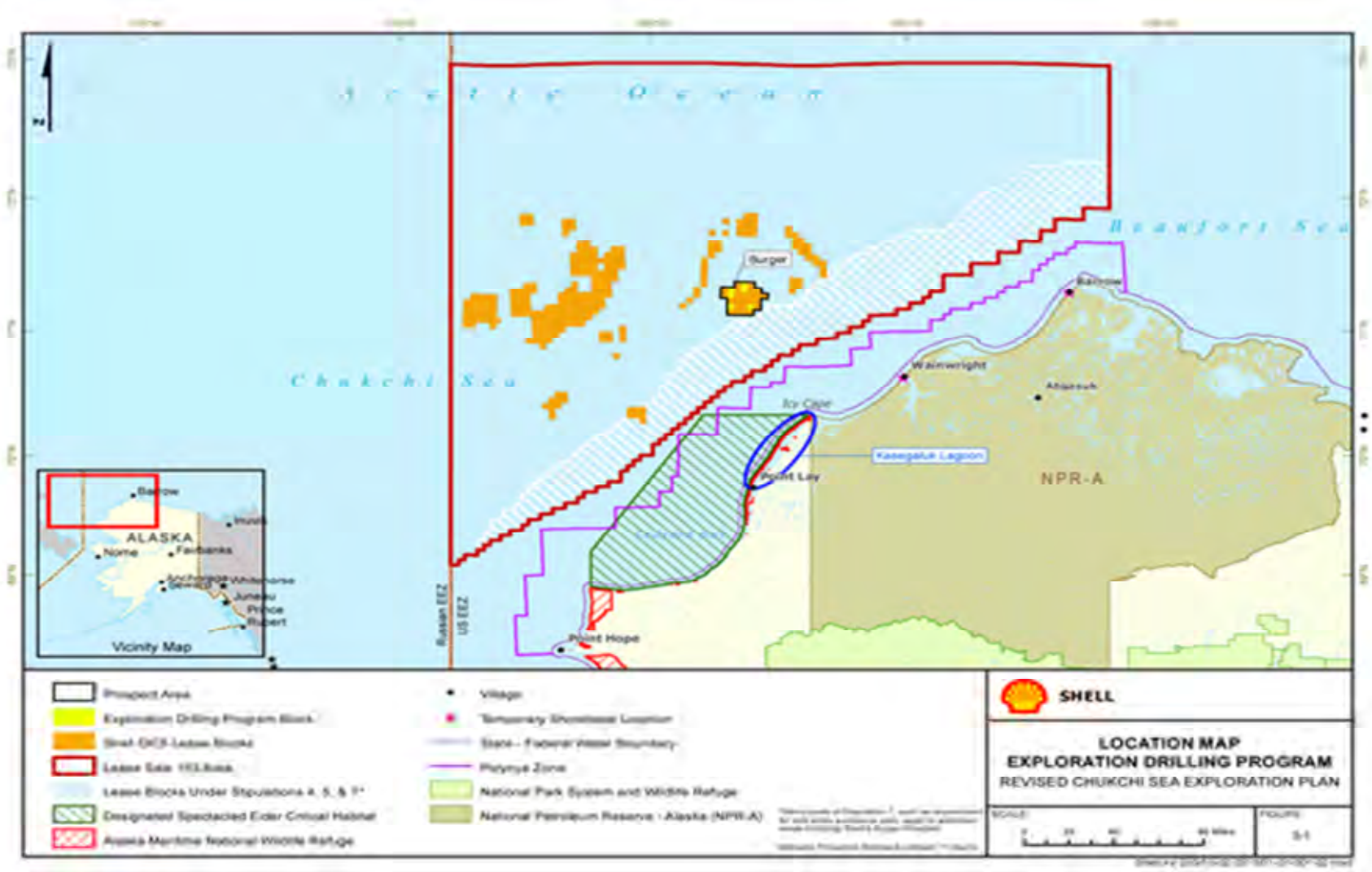

This page intentionally left blank.

2. BMP Plan Development and Implementation

Development and implementation of the Best Management Practices (BMP) Plan is based on requirements as described in 40 Code of Federal Regulation (CFR) 435 (Addendum B to Appendix 7 to Subpart A), guidance provided in the United States Environmental Protection Agency's (EPA) "Guidance Manual for Developing Best Management Practices (BMP)" (EPA 833-B-93-004), and a review of the facility operations.

This facility has implemented a BMP system in conjunction with the required monitoring of all effluent discharges under the NPDES GP. The monitoring program is described in Section 4, Discharge Management; Section 6, Fluids Management; and Section 7, Operating Practices for Regulated Discharges. Practices and management to ensure compliance with other Federal requirements, such as: solid and hazardous waste regulations promulgated under the Resource Conservation and Recovery Act, oil spill response regulations found under 30 CFR Part 254 and 33 CFR Part 154, air quality emissions under state and federal air quality regulations, and storm water control under Section 402(p) of the Clean Water Act and the regulations of 40 CFR 122.26 and 122.44 are incorporated by reference if applicable (See Reference Documents, Section 13).

2.1 Implementation

Implementation of the BMP will be introduced to each employee during the training described in Section 12. The BMP policy statement will be posted in key rig locations.

The Quality Assurance Project Plan (QAPP) is available for review as a separate plan.

The standard operating procedures (SOPs) permit(s) to work (PTWs), and local work instruction(s) (LWIs) for the *Noble Discoverer,* applicable to this BMP plan, are incorporated into this plan by reference, will be onboard the vessel and may be requested for review.

Safety Data Sheets (SDS), formerly known as Material Safety Data Sheets (MSDS) for chemicals in use aboard the *Noble Discoverer* are available online, with a back-up copy available from the Safety Training Supervisor. Chemicals onboard are managed per permit requirements and manufacturer's safety data information.

2.2 General Reporting

General inspection reports/records must be completed and kept as part of this BMP Plan during drilling operations; a copy is maintained on the rig. In addition, the following records must be completed if equipment operation occurs and maintained as part of the BMP on the rig and submitted at the end of the season to Shell:

- NPDES Master Spreadsheet – for monitoring and recording visible observations (foam, floating solids, and sheen), flow rates, and samples taken. Visual observation locations are provided in Figure 1-4 found in Appendix A.

CAUTION: All hardcopies of "Controlling Document" are uncontrolled. When using this document verify that the revision matches the revision in the controlled version found on Livelink®.

Shell and Noble will have full time Health, Safety, and Environment (HSE) staff on board during operational periods.

2.3 Policy Statement

BMPs have been developed and implemented on the drillship *Noble Discoverer* to control and minimize waste generated and discharged during drilling exploration activities offshore of the OCS in Alaska. These practices are part of the pollution prevention program on the *Noble Discoverer* resulting in the following: (1) savings in materials, pollution control, and potential liability costs; (2) enhanced work place safety; and (3) increased efficiencies.

This BMP Plan, written to address NPDES GP requirements, will be improved upon continuously with the goal of always controlling generated waste and reducing liquid and solid discharges. This BMP Plan includes guidelines for good housekeeping, equipment maintenance and operation, cleanup of spills and leaks, inspections, recordkeeping and training.

2.4 BMP Plan Committee

The BMP Committee is responsible for the development, implementation, and continued review and modification of this BMP Plan. The BMP Committee is comprised of:

- Shell Wells Superintendent (*Noble Discoverer*) – Tony Harris
- Shell Engineering Team Lead – Jason Smith
- Shell Environmental Manager – Lucy Jean

The BMP Committee has delegated the actual work of preparing the BMP Plan and overseeing its implementation to contractor support staff. The BMP Committee members listed above have direct responsibility or relevant knowledge to this BMP Plan. In addition to the committee members above, the owner operating company, Noble, has reviewed the BMP Plan and is contractually committed to comply with the applicable regulatory requirements.

2.5 BMP Certification Statement

The annual review of this BMP Plan and audit of the *Noble Discoverer* has been completed by Shell and, as applicable, any other individuals responsible for the development and implementation of the BMP Plan. This BMP Plan and its annual review fulfills the requirements for BMP Plans set forth by 40 CFR 435, NPDES GP, and the guidelines set forth within the EPA's Guidance Manual for Developing Best Management Practices (BMP) written in October 1993. Upon signature by the following responsible individuals, this BMP will be considered complete and in effect.

Table 2-1 BMP Committee Signatures

Name	Title	Signature	Date
Tony Harris	Shell Wells Superintendent		
Jason Smith	Shell Engineering Team Lead		
Lucy Jean	Shell Evironmental Manager		

The Shell Wells Superintendent, Engineering Team Lead, and Environmental Manager are primarily responsible for knowing the content of this BMP. BMP Plan modifications and annual review requirements are detailed in Section 14 of this plan.

CAUTION: All hardcopies of "Controlling Document" are uncontrolled. When using this document verify that the revision matches the revision in the controlled version found on Livelink®.

This page intentionally left blank.

CAUTION: All hardcopies of "Controlling Document" are uncontrolled. When using this document verify that the revision matches the revision in the controlled version found on Livelink®.

3. Facility Security and Vessel Support

Shell and Noble have existing security plans in place that restrict access to the *Noble Discoverer* and employees with access to the ship are provided training on these security measures. Aboard the ship, management of security is handled by Noble. Noble also has detailed confidential security plans in place per the requirements set forth under the applicable regulations of Maritime Security (MARSEC) and International Ship and Port Security.

3.1 Facility Description

The *Noble Discoverer* is an offshore oil and gas drillship adapted for operation under Arctic conditions. The *Noble Discoverer* is an anchored drillship with an 8-point anchored mooring system attached to the drill platform providing stability and ability for the vessel to maneuver and face oncoming sea currents. The hull has been reinforced for ice resistance. The *Noble Discoverer* has the necessary drilling equipment and ancillary facilities to drill, evaluate and abandon exploration wells in the Chukchi Sea of Alaska. The key components specific to compliance with the NPDES GP for the *Noble Discoverer* include but are not limited to:

- vessel capacity for approximately 124 people,
- drilling fluid handling system and solids control equipment,
- potable water system,
- non-contact cooling water system,
- environmentally sensitive valve procedures,
- deck drainage processor,
- two oil/water separators (OWS), and
- marine sanitation device (MSD).

Diagrams of the *Noble Discoverer* are contained in Appendix A.

3.2 Planned Vessel Support

During exploration drilling operations, the *Noble Discoverer* will be attended by support vessels that will be used for ice management, anchor handling, oil spill response (OSR), refueling, resupply, waste removal, discharge monitoring and servicing of the drilling operations.

CAUTION: All hardcopies of "Controlling Document" are uncontrolled. When using this document verify that the revision matches the revision in the controlled version found on Livelink®.

This page intentionally left blank.

CAUTION: All hardcopies of "Controlling Document" are uncontrolled. When using this document verify that the revision matches the revision in the controlled version found on Livelink®.

4. Waste Discharge Management

This section and Section 7 describe the discharges for which Shell has requested authorization from EPA; including the discharge limits for each effluent stream, how effluents will be monitored, and what actions will be required if upset conditions occur or permit limits are exceeded. Chukchi Sea discharge monitoring must follow the procedures specified in the NPDES GP. For specific explanation of the requirements of the NPDES GP, please refer to NPDES AKG-28-8100. For specifics on testing and sampling procedures, please refer to the QAPP.

4.1 Effluent Disposal

For the purpose of this document, an effluent is a discharged wastestream, or water, that is regulated. The volume and concentration of each discharge will vary depending on the activities being conducted onboard the vessel. While in transit to theater, the vessel will comply with MARPOL regulations for discharging waste streams. Specific tasks will be followed so all NPDES requirements are meet for continuous discharges before the transition from MARPOL to NPDES GP requirements. Concentrations of effluent parameters for the NPDES GP are reported electronically each month on the Discharge Monitoring Report (net DMR) and submitted to EPA.

During operations under the NPDES Permit requirements, all water and wastewater discharges will occur from various independent locations on both the port and stardboard side of the *Noble Discoverer*.

4.2 Discharges Covered by BMP Plan

Specific drilling fluid formulations, equipment, processes, material compatibility, chemical products, and processes have been examined to minimize estimated volume and toxicity for each discharge. Noble has procedures that address handling of solids, sludges, or other wastes generated from facility operation or treatment systems. These procedures are written to prevent any pollutant from such materials to be spilled or have an uncontrolled release. If there is any indication of hydrocarbon contamination, more frequent static sheen tests will be performed and if warranted, the LWI for Zero Discharge of Muds and Cuttings will be followed.

During the operating season, Shell plans to drill in waters of greater than 40 meters. A vessel anchored or in dynamic positioning over a lease block is considered a point source and is regulated by EPA under the NPDES GP and also 40 CFR Part 435. The following lists the types of discharges the *Noble Discoverer* has requested authorization for under the NPDES GP for Oil and Gas facilities on the OCS in the Chukchi Sea:

Discharge Number	Discharge Description
001	Drilling Fluids and Drilling Cuttings
002	Deck Drainage
003	Sanitary Wastes
004	Domestic Wastes
005	Desalination Unit Wastes
006	Blowout Preventer Fluid
007	Boiler Blowdown
008	Fire Control Test Water
009	Non-contact Cooling Water
010	Uncontaminated Ballast Water
011	Bilge Water
012	Excess Cement Slurry
013	Muds, Cuttings, Cement at Seafloor

During Shell's exploration operations in the Chukchi Sea, only water-based drilling fluid will be used and discharged from the *Noble Discoverer*.

In accordance with Shell Burger Prospect Drilling Fluid Plan, no mineral oil pills will be used during the exploration drilling program.

4.3 Discharge Security

Procedures and measures have been instituted to address the potential for an accidental discharge to the Chukchi Sea. General protocols to prevent the accidental discharge of non-permitted material include, but are not limited to; trained personnel, suitable chemical/hazardous materials storage areas and containers, sump alarms, door sills, high level alarms, placards to promote awareness of permit requirements, operating treatment systems, system isolation (lockout / tag out), and identification tags located on valves that could lead to potential discharges to the Chukchi Sea. Placards are posted in the facility identifying NPDES GP discharge locations. The NPDES Compliance Specialist will confir and coordinate with the on-board Noble staff involved with any discharge being conducted. The NPDES Compliance Specialist will be onboard to verify NPDES GP conditions and requirements are met.

For specific guidance and understanding of sampling requirements, refer to the QAPP.

CAUTION: All hardcopies of "Controlling Document" are uncontrolled. When using this document verify that the revision matches the revision in the controlled version found on Livelink®.

4.4 Discharge Volumes by Method, Equipment and Location

Authorized discharges occur from many hull openings located on the port and starboard sides of the *Noble Discoverer*. The volumetric amount of these waste discharges will either be read from independent digital flowmeters or estimated by calculation. To more precisely measure and monitor individual discharges, flow meters and temperature indicators have been installed at several locations. Discharge volumes not metered will be estimated or based on calculations.

4.4.1 D001 Water Based Drilling Fluids and Drill Cuttings:

Drilling fluid and cuttings will be discharged after the surface interval is drilled, casing is cemented, the Blowout Preventer (BOP) is deployed and riser is installed. Returned drilling fluid and cuttings are distributed over shale shakers allowing cuttings to be separated from the drilling fluid prior to discharge. Drilling fluids pass though the shaker screens and is returned to the active system for reuse. Cuttings flow off the shakers into a trough before being flushed with seawater and discharged through a shunt that runs out the bottom of the ship's hull (approximate 28 foot depth). Total volume discharged and chemical concentrations will be recorded daily using the M-I SWACO Drilling Fluid Management System, ONE-TRAX software. The daily total volume along with the sheen test results will be recorded on the NPDES Master Spreadsheet.

4.4.2 D002 Deck Drainage:

The deck drainage system is designed to capture spills, leaks, wash water, seawater, drillings fluids, rain water and snowmelt. The current design and management system on the *Noble Discoverer* has the ability to process all deck drainage through a multi-phase clarifier (MPC) prior to discharging overboard. As fluid accumulates on all decks, other than the rig floor and forward catwalk, it flows through various drains and into storage tanks. Deck drainage is collected in three main areas of the vessel. The rig floor, main deck port and starboard sides of the vessel. To estimate volumes of deck drainage, tank soundings of the port (P3) and starboard (S3) side storage tanks will be conducted following a rain event. The helicopter deck is designed with the deck itself being a containment vessel capable of holding the full fuel capacity of a Sikorsky 92N or equivalent helicopter. Drainage from the deck can be either directed to holding tanks on the accommodation roof in the case of a fuel spill, or directed via piping on port and starboard down to the poop deck and discharge onto the walkway in the case of rainfall (where is it included with other deck drainage, as above). The operation of the valve for directing the flow is done remotely from the activation station on the helicopter deck forward access platform. Fluid in holding tanks or bilge will be directed to the one OWS which is listed on the vessel's International Oil Pollution Prevention Certificate and will only be used to process deck drainage. Discharge to the receiving water is approximately 28 feet below the surface.

4.4.3 D003 Sanitary Waste:

Sanitary waste is collected throughout the vessel and processed through one of two MSD units for treatment. The primary unit is located in the main engine room. A secondary unit may be used if needed which is located in the heavy tool storage room. After processing from the main unit, effluent is discharged approximately 3 feet below the surface of the water, through a 4 inch line located in the main engine room on the port side. The secondary unit discharges from the BJ

CAUTION: All hardcopies of "Controlling Document" are uncontrolled. When using this document verify that the revision matches the revision in the controlled version found on Livelink®.

room on the starboard side. Sanitary waste discharge will be calculated daily based on 10 gallons of seawater use per number of individuals/persons on-board (POB) the vessel while in operation.

4.4.4 D004 Domestic Waste:

Domestic wastewater collected throughout the ship from sinks, showers, eyewash stations, decontamination showers and laundry facilities, flows to one main line located in the main engine room and is discharged at the surface of the receiving waters. Because the effluent does not require processing, it will be discharged to receiving waters and monitored during daylight hours. Volume of domestic waste is determined from the sounding sheet of potable water tanks which is monitored daily by the Noble Engineering Department. The previous day potable water volume plus water made by water makers minus current on-hand volume will equal the amount of domestic wastewater discharged.

4.4.5 D005 Desalination Unit Waste:

Desalination unit wastes will consist of wastewater associated with the process of creating freshwater from seawater. The effluent waste consists of residual high-concentration brine similar to seawater in chemical composition and is discharged at the surface of the receiving waters. Desalination wastewater generated by the evaporators and reverse/osmosis equipment is discharged on either or both port and starboard sides of the vessel. Volume of waste will vary as some of this waste may be co-mingled with discharges of non-contact cooling water.

4.4.6 D006 Blowout Preventer Fluid:

The BOP will be function tested prior to being deployed. Once deployed and in in place, it will only be used when a well condition, such as uncontrolled release of formation gas or fluid, requires an immediate shut-in of the well to prevent a catastrophic event from occurring. Regulations require the blow-out preventer to be function tested on a weekly basis and a complete pressure test to be performed bimonthly, unless an alternative time interval is authorized.

BOP function test volumes vary depending on the specific section of the blowout preventer being tested. The BOP discharge volumes may range from 1 gallon to approximately 60 gallons per BOP section; with a total estimated volume of all discharge fluid to be approximately 530 gallons per BOP test. Each mixture of BOP fluid is recorded by the Noble Sub-sea Department. Volume of BOP discharge during testing is estimated by the NPDES Compliance Specialist on the NPDES Master Spreadsheet. Discharge to receiving waters occurs at the depth of the top of the wellhead.

4.4.7 D007 Boiler Blowdown:

Boiler blowdown operation is performed on a routine basis in order to control the formation of dissolved solids, to remove suspended solids and to properly maintain the internal components of each boiler per manufacturers operation and maintenance specifications. Ameroyal CF is used to reduce the buildup of scale and remove solids from boilers. The depth of discharge is approximately 5 feet below the surface of the receiving waters. Prior to Noble blowing down boilers, the NPDES Compliance Specialist will be notified so that all required samples and estimates for volumes can be performed.

4.4.8 D008 Fire Control System Test Water:

Noble personnel may test the fire control systems onboard the *Noble Discoverer* once per week during drills. Seawater is drawn through a sea chest and pumped through the fire control system. The test water is then discharged directly overboard to the surface of the receiving waters through fire hoses. Since Noble randomly selects one fire station throughout the rig for testing, the NPDES Compliance Specialist will confirm with the Noble Marine Department which and when that station will be tested. While the fire test seawater is discharged from the hose directly overboard, the NPDES Compliance Specialist will perform a visual inspection and estimate volume by flow rate multiplied by duration.

4.4.9 D009 Non-contact Cooling Water:

There are six diesel generators located onboard the *Noble Discoverer*; all are located in the generator room, in the forward section of the ship, below the main deck. Closed fresh water cooling jackets are used for primary cooling and are contained in a closed loop system.

Seawater is withdrawn from a sea chest located in the generator room at approximately 28 feet below the surface and is circulated thru individual generators, after-cooler heat exchangers and then thru jacket water exchangers. A heat exchanger exists between the primary fresh water and the secondary sea-water non-contact cooling system for installed machinery such as the HVAC air conditioning units, cement units, compressors, generators, desalination units, rectifiers, and hydraulic equipment (rig brakes). After the effluent seawater exits the jackets, it is discharged from the vessel through a pipe located on the starboard and/or port side at approximately the surface of the receiving waters or the effluent can be recirculated to the sea chest for discharge. No intermixing of fresh and salt water occurs between the primary and secondary loops.

Prior to passing through one of the three discharge locations, the effluent temperature is measured by a sensor installed near the discharge location (outfall). The data is logged every hour and the high and low values are recorded daily.

An inline flow meter displays the velocity of flow in real time and is also stored on a data logger. The rate of flow can be viewed directly from the meter or collected from the data logger. In the event that a flow meter fails, estimates will be based on historical data.

4.4.10 D010 Uncontaminated Ballast Water:

During operations, equipment and supplies will be loaded, unloaded or moved around the vessel, which changes the overall stability of the vessel. In order to maintain safe operating conditions and to ensure proper stability of the vessel, seawater is constantly moved in and out of ballast tanks that are located throughout the entire vessel. Noble Marine Department is responsible for ensuring the correct volume of seawater is loaded, transferred or discharged along with the specific tanks fluid is moved into/out of. Volume of seawater that enters or leaves the ballast tank will be calculated during discharge based on the tank size and capacity. Discharge to the receiving waters occurs at the surface.

CAUTION: All hardcopies of "Controlling Document" are uncontrolled. When using this document verify that the revision matches the revision in the controlled version found on Livelink®.

4.4.11 D011 Bilge Water:

Bilge consists of water that collects in the lower internal parts of the drilling vessel and must pass through an oil/water separator prior to discharge. All liquids that drain to the bilge will be processed through the OWS located in the main engine room. The oil collection tank is located directly below the separator. Liquids from the decks, shakers, and rig floor will be processed through the MPC then the OWS located in the compressor room as needed. Other sumps on the rig that could possibly contain oily waste water also feed into a separator in the main engine room. There are two OWS's on the *Noble Discoverer* for separating small amounts of wastewater and drilling fluid spills from the deck. Only one is listed on the vessels International Oil Pollution Prevention Certificate and will only be used to process deck drainage. As such the bilge volume will be metered from the Oil Water Separator (OWS) located in the starboard stern and discharged below the ship's waterline at approximately 8 feet.

4.4.12 D012 Excess Cement Slurry:

Prior to cementing operations, the Halliburton Cement Operator will provide the total volume of each chemical used during each specific cementing operation to the NPDES Compliance Specialist. The chemical volumes and the total cement volume will be recorded. After cement operations are completed, seawater is be used to rinse cement tanks lines. Two tanks are used for cement operations, each have 10 barrels capacity. For excess cement slurry daily volume discharged is a calculation of number of times both tanks are filled times 20 barrels. Discharge to the receiving waters is approximately 6 feet below the surface.

4.4.13 D013 Muds, Cuttings, Cement on the Seafloor:

All drilling fluids, cuttings and cement will be discharged at the seafloor in the early phases of drilling operations; before the riser is installed and during well abandonment and plugging. Total volume of drilling fluids and cuttings discharged will be recorded using the M-I SWACO ONE-TRAX Drilling Fluids Management System software. ONE-TRAX will also calculate the concentrations of products added to this discharge. The total volume of chemicals used in the cement will be provided to the NPDES Compliance Specialist from the Halliburton Cement Operator prior to cementing operations.

All waste types, discharge equipment, volume methods, outfall locations with depth from the vessel are summarized in Table 4-1 and depicted in Figure 1-2 and Figure 1-3 found in Appendix A. Additional detail is provided in Section 7.

Discharge volumes will vary per well drilled based on drill depth and well pressure. Table 4.2 in Appendix A, provides discharge volume estimates per well, waste type and discharge rates. Independent digital flow meters along with temperature sensors have been installed in several outfall pipelines to more accurately monitor flow and temperature. The monitoring schedule and applicable discharge limits are provided in the QAPP tables for all authorized discharges.

Table 4-1 Waste Discharges by Type, Equipment, Method and Locations

Waste	Waste Type	Discharge Equipment	Volume –Meter or Estimate	Discharge Location (Depth)
01	Drilling Fluids and Drill Cuttings	Shunt Line	**Estimate:** ONE-TRAX Software operational data input and Pit Volume Totalizer	Bottom Shunt (mid-hull, approximately 28 feet below surface)
002	Deck Drainage	Deck Drainage Processor	**Estimate:** P3 & S3 tank volume sounding	Starboard Tanks (mid-hull, approximately 28 feet below surface)
003	Sanitary Waste	MSD	**Estimate:** Calculation of 10 gals/POB/day	Port – Stern (at waterline)
004	Domestic Waste	Piping	**Estimate:** Calculation with tank soundings	Starboard Stern (at waterline)
005	Desalinzation Waste	R/O Unit and Desalinators	**Meter:** Combined discharge with Non-contact cooling water	Port & Starboard (at waterline)
006	Blowout Preventer Fluid	BOP	**Estimate:** Manufacture Certificate, test fluid volume	Deck or subsea water test
007	Boiler Blowdown	Boiler	**Estimate**: Manufacture Certificate, test volume	Port – Bow (approximately 5 feet below surface)
008	Fire Control System Test Water	Hoses	**Estimate:** Flow rate multiplied by duration	Overboard – (surface)
009	Non-Contact Cooling Water	Diesel Generators	**Meter**	Port & Starboard – Bow (at waterline)
009	Non-Contact Cooling Water	Diesel Generators Recirculation Line	**Meter**	Bottom of Hull (approximately 28 feet below surface)
009	Non-Contact Cooling Water	Cement Unit	**Meter**	Port – Midship (approximately 6 feet below surface)
009	Non-Contact Cooling Water	Compressor Unit, Hydraulic Cooler	**Meter**	Port (at waterline)
009	Non-Contact Cooling Water	SCR A/C Unit	**Meter**	Starboard - Midship (at waterline)
009	Non-Contact Cooling Water	HVAC	**Meter**	Starboard- Bow (at waterline)
010	Uncontaminated Ballast Water	Ballast Tanks	**Estimate:** Tank soundings	Port - Midship (at waterline)
011	Bilge Water	OWS	**Meter**	Starboard- Aft (approximately 8 feet below surface)
012	Excess Cement Slurry	Cement Unit	**Estimate:** Tank capacity volume	Port - Midship (approximately 6 feet below surface)

CAUTION: All hardcopies of "Controlling Document" are uncontrolled. When using this document verify that the revision matches the revision in the controlled version found on Livelink®.

4.5 Discharge Monitoring Reports

Inspections of discharge sources include visible observations (foam, floating solids, and sheen), measurements, and sample collection and testing during operations. The information contained in the DMR and written correspondence will routinely be submitted to Shell. At the completion of monthly data compilation, the following information will be submitted to EPA per the reporting stipulations of the NPDES GP:

- required sampling results and
- data from samples collected more frequently than required by the NPDES GP.

Facility personnel will follow standardized monitoring and sampling procedures related to each discharge and the NPDES Compliance Specialists will be on-site to verify compliance to the provisions of the NPDES GP.

4.6 Discharge Reporting and Notifications

The NPDES GP requires that traceable records of routine and non-routine discharges be maintained. The M-I SWACO operator reporting system will track and maintain routine observations and on-site documentation for authorized discharges. The NPDES Master Spreadsheet form is utilized to maintain a daily or weekly record of key discharges to assess compliance of drilling waste management during exploration activities.

Shell is responsible for all compliance reporting to regulatory agencies. Monitoring results will be summarized and submitted monthly by the 20th day of the following month. Annual sampling results will be reported on the January DMR of the following year. All records of monitoring information shall be retained by the permittee at least 5 years from the date of the sample, measurement, report, or application.

Noncompliance or change as detailed in Section 11.3 will be reported to the EPA by telephone within 24 hours from the time of occurrence or as per permit requirements. This includes any unanticipated bypass or upset that exceeds discharge limitations in the permit or any violation of maximum daily discharge limitations for any of the pollutants requiring 24-hour reporting as listed in Part 1 of the NPDES GP.

If any of the discharge limits are exceeded or if other suspected BMP Plan non-compliance or modification occurs, the Shell Compliance Duty Officer (at 907-830-7435) must be called immediately.

5. Drilling Fluids and Solids Control Operation

Drilling fluids consist of a base fluid along with various drilling fluid products that are used to control wellbore pressure, lubricate drill-string, remove cuttings, suspend solids, reduce fluid loss to formation and maintain formation integrity. In the early stages of drilling, prior to the riser being set, the drilling fluid may be refered to as "mud". Drilling fluid returning to the surface from the wellbore is separated from the formation cuttings at the shale shakers, limiting the amount of drilling fluid discharged with the cuttings. New drilling fluid and/or the base fluid is continually added to the surface system to maintain sufficient volume and reduce low gravity solids percentage during drilling operations.

The solids control equipment (SCE) is used to maintain drilling fluid properties at required parameters. LGS, or Low Gravity Solids, comprised mostly of drill cuttings, are kept at a minimum in the active drilling fluid system with the SCE. Solids removal efficiency depends on the processing equipment and formation characteristics.

Drilling fluid pits are used store and recondition all drilling fluids. This BMP covers active drilling fluid pits, reserve drilling fluid pits, the piping associated with drilling fluid transfer, and mixing apparatus. The active drilling fluid system feeds drilling fluid directly to the wellbore. Reserve drilling fluid pits are used to store drilling fluid and specialized pills needed throughout the well.

These cleaning methods shall include, but are not limited to, the following general procedures:

- confined space entry permit, if entering a pit, and
- approved cleaner, if needed and tracking the concentrations and volumes of cleaners used.

BMPs for proper control and safe operational uses of the drilling fluid and the SCE involve securing valves and preventing unplanned discharges (see Section 9). All pits and flow lines are marked or identified and all discharge (dump) valves are identified and have redundant containment. Noble's written procedures for all drilling fluid and solids control equipment are incorporated by reference into this BMP and provided in Section 13.0, Referenced Documents.

5.1 Solids Control Equipment and Operation

As drilling fluids return from the wellbore, the fluids pass through a series of equipment that removes the solids so the fluid can be reused. The primary solids removal equipment is the shale shakers which provide an initial separation of drilling fluids from drill cuttings. From the shakers, the drilling fluid is sent to the sand traps which are a series of four pits that allows solids to settle out. If the overall LGS percent starts to rise, the desilter/drilling fluid cleaner and centrifuges can be used for additional processing. This equipment is intended to remove solids from the drilling fluid that has passed through the shale shakers.

CAUTION: All hardcopies of "Controlling Document" are uncontrolled. When using this document verify that the revision matches the revision in the controlled version found on Livelink®.

Low efficiency SCE results in high accumulated solids in the drilling fluid. If the solids cannot be removed by the SCE, the solids content and rheological properties of the drilling fluid must be controlled by adding fresh drilling fluid, base fluid and/or products to the drilling fluid system. In other words, SCE which operates with high efficiency can reduce the drilling fluid volume required to drill a given well, thereby minimizing the waste generated.

The operation of the SCE should be consistent with the manufacturer's design criteria or recommendations. Equipment design and operation will depend on drilling fluid characteristics, mainly type, flow, density, and rheological properties.

Policies and procedures are referenced in Section 13, Referenced Documents.

5.2 Drilling Fluid Pit System

The operation of the drilling fluid system should be consistent with the manufacturer's design criteria or recommendations. Equipment design and operation will depend on drilling fluid characteristics, mainly type, flow, density, and rheological properties. Recognizing that each drilling operation is unique, the drilling fluid system should be designed and operated, to the extent practical, consistent with API RP 13C.

Agitators in drilling fluid pits help added drilling fluid products to go into solution and to suspend solids. Without any agitation, excessive drill solids can accumulate in dead spaces of a drilling fluid pit. Drilling fluid pits also use gun lines to which circulate drilling fluid within the pit to help agitate fluid in corners and mix added drilling fluid products. Solids are typically drilled cuttings but may also include added materials such as barite, bentonite and calcium carbonate. At the completion of the well, drilling fluid pits are emptied and cleaned.

5.3 Active and Reserve Pits

The drilling fluid pits are used to condition and store and condition drilling fluids. The active drilling fluid system feeds drilling fluid directly to the well bore through the drill string when circulating conventionally. The "active" pit system normally involves two pits in a rectangular room directly adjacent to the mix/sack/pump room. Reserve pits refer to pits that are not part of the active system but may become active as operations change throughout the drilling of the well. These pits can be used to store drilling fluid for fluid additions to the active system, as well as for storing excess and different fluids.

The total pit volume available for drilling fluids in the active system is 2,400 total barrels (bbls). There are also 2 tanks with a 1,700 bbls capacity, which will be used to store the base fluid (see Drilling Fluid Plan).

Drilling fluid pits are fully enclosed in the pit room and have no exposure to the outside environment. Each pit has a sample point that will facilitate the collection of samples for required tests on the drilling fluid. The tests will be performed at a sink that will aid in the cleaning of the equipment after the tests are completed. Agitators are routinely used in drilling fluid pits to help keep solids in suspension. Each of the pits in the active and reserve systems has agitation to limit the buildup of solids.

5.4 Shale Shakers and Sand Traps

The shale shakers, located above the main deck in the shaker house, are utilized to remove the cuttings from the drilling fluid returned from the well. The shale shaker design, together with the screen characteristics and shale shaker deck angle, controls the size of the cuttings separation and the length of time that the drilling fluid and cuttings spend on the screen. Screen characteristics affecting the efficiency of cuttings separation include mesh size, conductance, number of layers, type of construction and non-blanked area.

The goal of the shale shakers is to achieve high LGS removal efficiency, which results in solids as dry as possible (when discharged) and an optimum cut point. The screens on the shakers will be sized to handle the expected process rates for the drilling operation and maintain the required quality of the drilling fluid.

The operation of the shale shakers must be balanced between the amount of low gravity solids (LGS) in the drilling fluid and the amount of drilling fluid retained on the discharged cuttings. A balance must be struck between the dryness of the cuttings (how much fluid is removed) and the carryover of fine solids in the drilling fluid, which degrades its quality and causes operational issues with the fluid.

Drilling fluid, returned by the flow line and processed over the shale shaker equipment is then routed to the sand traps. The sand traps, which are located in a row parallel to and at the same elevation as the main pits (and upon which sit the shakers and various other SCE), have no agitation or jetting capability. The sand traps overflow into adjacent pits, routed by connecting troughs, returning into the active system or processed through additional drilling fluid cleaning equipment.

5.5 Degasser and Discharge Pits

After the drilling fluids passes over the shale shakers and flows into the sand traps, the returning fluids can be processed through the degasser before fluid is sent back into the active system.

The degasser is used if gas from the wellbore is introduced into the drilling fluid system causing the weight of the drilling fluid to decrease. Fluid processed through the degasser will be returned back to the active pits.

CAUTION: All hardcopies of "Controlling Document" are uncontrolled. When using this document verify that the revision matches the revision in the controlled version found on Livelink®.

This page intentionally left blank

CAUTION: All hardcopies of "Controlling Document" are uncontrolled. When using this document verify that the revision matches the revision in the controlled version found on Livelink®.

6. Drilling Fluids Management

Maintenance and operational requirements are covered by manufacturer's manuals. The BMP plan addresses industry standard practices for active drilling fluid pits, reserve drilling fluid pits, the piping associated with drilling fluid transfer, blending apparatus, and solids control equipment. Proper pit maintenance and cleaning methods will minimize the potential for the build-up of drilling fluid solids and unnecessary discharge of drilling fluids. Proper fluid management minimizes the amount of drilling fluids adhering to drilled cuttings before discharge overboard, removes drill cuttings from the drilling fluids to prevent incorporation into the drilling fluid, and maximizes the recovery of drilling fluid for reuse. This will also minimize the potential for buildup of drill cuttings (including accumulated solids) in the active drilling fluid system.

Prior to adding drilling fluid to any pit, it is standard practice to ensure that pits are clean and no fluid remains in the pit. Before fluid is added into any pit, all valves which would allow fluid to be discharged directly overboard will be securely closed. These valves will be labelled and tagged to reduce the potential of a non-permitted discharge. These valves will not be opened unless the NPDES Compliance Specialist is notified and all required samples and testing have been performed.

6.1 Pit Cleanout

At the end-of-well or if the drilling fluid being used must be swapped, the pits must be cleaned. This task will only be completed after approved by the NPDES Compliance Specialist and the Drilling Foreman. Once pits are emptied, water can be used to rinse pits for additional cleaning. Water used to rinse one pit will then be transferred to other pits which will reduce to over waste discharged. A hose can also be used to help clean the sides and remove build up.

BMPs for drilling fluid pits focus on securing valves, proper operation and preventing unplanned discharges as part of general good housekeeping (see Section 8). Pits and lines are marked and the discharge (dump) valves will have placards and/or color-coded schemes. Written procedures for drilling fluid pits that are incorporated by reference into this BMP are provided in Section 13.0, Referenced Documents. General housekeeping practices for drilling fluid pits are listed in Table 6-1.

Table 6-1 Housekeeping Practices for Drilling Fluid Pits

BMPs for Housekeeping of Drilling Fluid Pits
Surface Pits • A pressured water line will be used for general cleaning on and about the pit area, including the shaker and shaker screens. **Subsurface Pits or Tanks** • Written procedures will be followed for transferring and measuring volumes and agitating with internal gun lines. • Cleanout procedures will be reviewed to determine if a PTW is needed for the cleanout.

CAUTION: All hardcopies of "Controlling Document" are uncontrolled. When using this document verify that the revision matches the revision in the controlled version found on Livelink®.

The rig is equipped with alarm systems on the drilling fluid pit system. Sonic sensor data indicating pit volumes is displayed in five areas:

- the rig floor (driller's console monitor),
- the drilling fluid lab,
- the pit area,
- the Drilling Foreman's Office,
- the Assistant Rig Manager's Office.

6.2 Pit Maintenance and Operation

Equipment BMPs for drilling fluid pits focus on operation and equipment. The purpose of focusing on the operation and equipment for the drilling fluid pits is to conduct safe and effective drilling operations and to implement controls to prevent leaks and spills. Equipment maintenance and operating procedures incorporated by reference in this BMP are listed in Section 13, Referenced Documents. General maintenance and operation of drilling fluid pits are listed in Table 6-2.

Table 6-2 Maintenance and Operation of Drilling Fluid Pits

BMPs for Maintenance and Operation of Drilling Fluid Pits
General
• Secure discharge (dump) valves on all surface drilling fluid pits and water lines to the drilling fluid pit area during drilling fluid operations.
Operation
• Run agitators continuously when drilling fluid is in the pit.
• Inspect agitators to verify proper working order.
Clean-Out Pits
• Pump out drilling fluids for disposal after consulting with the NPDES Compliance Specialist who will ensure proper testing and record keeping. Flush with water. Follow valve-securing procedures and PTW before entering drilling fluid pit to complete final clean out of pits.
• Following the opening of the discharge (dump) valves, inspect and re-seal according to proper procedures, with particular attention to tank volumes upon first refilling the tank to detect potential leaking of the valve.
• Evaluate solids buildup between pit cleanouts.
Good Housekeeping
• Follow written procedures for transferring, measuring volumes, and agitation. Cleanout procedures will be reviewed and PTW seccured, if entering pit for cleanout.

6.3 Drilling Fluid Pit System Inspections

The visual inspection of the drilling fluid pit system is the responsibility of the Derrick man or designee. The Derrick man or designee are required to maintain proper fluid levels in the drilling fluid pit system during all times drilling operations are on-going. In addition, the Derrick man or designee is required to conduct periodic inspections of the drilling fluid levels and the overall conditions of the drilling fluid pit area. Any problems requiring attention are to be noted on the Derrick man's Daily Report which is submitted at the end of each shift. Operation, maintenance, and repair regarding the drilling fluid pit

CAUTION: All hardcopies of "Controlling Document" are uncontrolled. When using this document verify that the revision matches the revision in the controlled version found on Livelink®.

system are to be included in the overall drilling fluid pit system inspection records. The Derrick man or designee is responsible to verify that equipment inspections, preventative maintenance and general housekeeping of the drilling fluid pit area is conducted and compiled in a timely fashion. In addition, the Drilling Fluid Specialist maintains separate documentation and records (Daily Drilling Fluid Report) specific to drilling fluid requirements throughout the drilling operations. Record keeping responsibilities will be in accordance with the substantive requirements set forth in the NPDES GP. Applicable records will be maintained on the rig and following the drilling season, will be on file with Shell.

6.4 Solids Control Equipment Management Practices

This section addresses BMPs to minimize the amount of drilling fluids adhering to drill cuttings before discharge overboard, to remove drill cuttings from the drilling fluids to prevent incorporation into the drilling fluids and to maximize the recovery of drilling fluid for reuse. It also describes BMPs to minimize the potential for buildup of drill cuttings (including accumulated solids) in the active drilling fluid system. Cleanup and other good housekeeping procedures incorporated by reference in this BMP Plan are listed in Section 13, Referenced Documents. General SCE housekeeping practices are listed in Table 6-3.

Table 6-3 BMP for the SCE

BMPs **for SCE**
• Keep work areas clean, neat, and accessible. • Store materials properly. • Be sure all transfer lines are clearly marked. • Conduct preventative maintenance on equipment, including major process units and their connections, pumps, and valves as outlined by the manufacturer. • Operate shakers properly to prevent drilling fluid overflow. • Keep floors clean and free of clutter and tripping hazards. • Keep sinks and work surfaces clean and neat. • Keep stairways clean, accessible, and free of tripping hazards. • Keep hoses clean and neatly /safely stored. • Have sufficient cleanup equipment and materials readily available. • Cleanup leaks and spills promptly. • After transferring bulk material to storage tanks or drilling fluid system, clean up residual drilling fluid that may have leaked and incorporate into the drilling fluid system to minimize waste. • Conduct visual inspections to verify correct practices and detect problems, if any, weekly when in use.

CAUTION: All hardcopies of "Controlling Document" are uncontrolled. When using this document verify that the revision matches the revision in the controlled version found on Livelink®.

6.4.1 Shale Shakers

The shale shaker design, together with the screen characteristics, controls the efficiency of the cuttings separation and the length of time that the drilling fluid and cuttings spend on the screen. Screen characteristics affecting the efficiency of cuttings separation include mesh size, conductance, number of layers, type of construction, non-blanked area and deck angle.

Table 6.4 below lists general guidance for these parameters. Policies and procedures referenced in this BMP Plan are listed in Section 13, Referenced Documents.

Table 6-4 BMP for Shaker Operation

BMPs for Shaker Operation
• Screen tension should be maintained at the optimum torque for that shaker. Tension should be checked after 30 minutes of operation following installing new screens and daily thereafter. • The screen deck angle should be maintained to manufacturer's recommendations during normal operation. • Leave at least one butterfly valve (furthest from the flow line entry point) in the fully open position, and restrict valves to the other shakers as required to distribute flow evenly. • Physically inspect the shaker area to monitor the operation of the shakers, inspecting screens for holes and tears and washing off screens of any caked or dried drilling fluid/solids. • Visually monitor shaker area and adjust pumps to accommodate shaker conditions. • When in use, inspect weekly and record to verify correct practices.

Table 6.5 below lists general maintenance activities for shakers.

Table 6-5 BMP for Shaker Maintenance

BMPs for Shaker Maintenance
• Maintain motors as per contractor's preventative maintenance instructions (PMI) [see Section 13, Referenced Documents]. • Replace worn or damaged components as needed, including decking rubbers, decking strips, tension rails, springs, and screens (check for wear, tears, or abrasion).

Inspections of shale shaker equipment will be recorded routinely when in use.

6.4.2 Fines Removal Equipment

Fines removal equipment is necessary on the rig to remove drilled solids that are smaller than 70 microns. The desander / drilling fluid cleaner contains cones designed to remove fines greater than 70 microns, and the desilter / drilling fluid cleaner is designed with cones to remove fines 30 microns and greater. Fluid properties and suspended solids properties (mainly size and weight) determine which equipment is used to remove the fines.

The centrifuge on the *Noble Discoverer* used for fines removal will remove particles down to 5 microns. Varying the bowl speed varies the gravitational force applied to the fluid with this equipment. Inspection of centrifuges and other fines removal equipment will occur routinely when equipment is in use.

CAUTION: All hardcopies of "Controlling Document" are uncontrolled. When using this document verify that the revision matches the revision in the controlled version found on Livelink®.

6.5 SCE Inspections

Inspection of the SCE is the responsibility of the Derrick man and will be periodically conducted when SCE equipment is operated. BMP hard copy forms are filed in the corresponding tab of the NPDES Environmental Records Binder. The Derrick man is responsible for ensuring work place inspection and equipment maintenance are completed and records are maintained, although certain tasks may be delegated to qualified individuals.

Execution of these responsibilities will also follow existing Noble operating procedures and policies. Any additional record keeping responsibilities will be in accordance with M-I SWACO operating procedures and policies and will be in compliance with the substantive requirements set forth in the NPDES GP.

CAUTION: All hardcopies of "Controlling Document" are uncontrolled. When using this document verify that the revision matches the revision in the controlled version found on Livelink®.

7. Operating Practices for Regulated Discharges

All discharges will be monitored and observation/tests and analytical results recorded to demonstrate compliance with the NPDES GP. For specific information, refer to Section 4 of this plan, the QAPP and Referenced Documents, Section 13 for practices incorporated by reference. See Appendix A for vessel location discharges (outfalls), Table 4.1 in Section 4 and Table 4.2 in Appendix A for waste volume estimates and discharge rates. Inspection observations will be recorded on the NPDES Master Spreadsheet. Completed NPDES Master Spreadsheets will be forwarded to Shell.

7.1 Water-based Drilling Fluids and Drill Cuttings (Discharge 001)

All drilling fluids go through a chemical review process before being listed in the Drilling Fluids Plan. Only drilling fluid additives to pass the suspended phase particulate (SPP) toxicity test (list included in Drilling Fluids Plan) will be used in the well.

After the well cellar is established, the riser is installed on the rig which allows water based drilling fluids and cuttings to return to surface for processing and re-use. All drilling fluids and cuttings are discharged below the sea surface (See figures in Appendix A). Drilling fluids and cuttings can be directly discharged off the vessel to the Chukchi Sea below the water surface only when specific valves are aligned and opened in the sequence. The Emergency Diverter controls are housed in the drill shack on the drill floor and are only used under catastrophic events. In order to open or activate the diverter, two switches must be activated simultaneously, after unlocking the panel door. The Driller is the custodian and operator of all well control equipment and has the authority to close well control equipment or divert straight overboard in a well control emergency situation.

On-site monitoring of drilling operations will be recorded routinely when in operation into the driller's log. Drilling operations and subsequent drilling fluid and drill cuttings waste discharge (D001) is estimated for 20 days per well. Estimated drilling fluid and drill cuttings waste volumes per well is provided in Appendix A, Table 4.2. All laboratory and monitoring data will be submitted to Shell. On-site monitoring also includes housekeeping measures which confirm that:

- Chemicals will be stored in closed containers and the drilling floor kept clean and organized.
- Holding tanks will be cleaned as needed; systems will be flushed as needed; and piping and joints will be repaired / replaced as needed.
- The Drilling Fluid Specialist is responsible for tracking chemical composition, so as not to exceed SPP toxicity testing listed in the Drilling Fluid Plan.

7.2 Deck Drainage (Discharge 002)

The deck drainage system is designed to capture spills, leaks, wash water, seawater, fluid from the rig floor, rain water and snowmelt. The current design and management system on the *Noble Discoverer* processes all contaminated deck drainage prior to discharge overboard. As fluid accumulates on other areas of the deck that are not as likely to be contaminated, it flows through various drains and into storage

CAUTION: All hardcopies of "Controlling Document" are uncontrolled. When using this document verify that the revision matches the revision in the controlled version found on Livelink®.

tanks. The fluid is stored in these tanks until such time it is determined that there are sufficient quantities to batch process for disposal (if warranted) or go directly overboard.

Prior to discharge to receiving waters, the effluent will be sampled and tested in accordance with permit requirements. All fluid from the rig floor and forward catwalk drain to a single collection site and is measured for oil content. If fluid is >15ppm, the drainage will be processed thru an OWS. If rig floor fluid is <15ppm, it will be discharged overboard after the NPDES Compliance Specialist has collected and sampled the effluent as outlined in the QAPP. In the event that the water does not pass a static sheen test, this water will be directed for additional processing and treatment through an OWS prior to discharge**.**

The heliport deck does not have containment due to safety considerations and drains to a deck below. Heliport and exterior decks will be inspected multiple times routinely to verify that no materials are present for run-off.

Housekeeping measures include:

- all drains will be mapped out and visually inspected routinely by the NPDES Compliance Specialist. No direct overboard draining occurs unless valves are specifically aligned;
- only environmentally sensitive detergents and deicing compounds will be sparingly used to clean or de-ice decks;
- the decks and floors will be kept clean of debris to prevent plugging of the drains;
- containers with closing lids will be used to minimize/prevent accidental spills onto decks; and
- spills will be contained and cleaned up immediately to prevent contamination of drainage.

Prior to drilling, the NPDES Compliance Specialist will perform a pre-operational inspection and routine inspections during drilling. Visual inspections of deck drainage areas are to verify proper operation and to document any signs of pipe leaks or spills. Deck drainage discharge is recorded per discharge. Inspection observations will be recorded on the NPDES Master Spreadsheet. Compliance inspections will be in accordance to the published SOPs. Completed NPDES Master Spreadsheet will be forwarded to Shell.

7.3 Sanitary Wastewater (Discharge 003)

Sanitary waste (black water) consists of human waste from toilets and urinals. The volume of this waste varies with occupancy and treatment systems. A MSD is installed and used on the *Noble Discoverer*. Raw sewage enters the MSD's V-1 tank and is finely ground with a macerator. The macerated sewage is then mixed with seawater as it flows to a bookcell; where direct current is applied using a logically controlled rectification system. The electrochemical reaction produces sodium hypochlorite which kills bacteria and oxidizes organic compounds. This unit does not add chlorine as a disinfectant.

Effluent liquids will be monitored and sampled using a port located near the discharge location (outfall). Discharge occurs below sea level on the port side of the vessel when anchored, and on the starboard side when in transit.

CAUTION: All hardcopies of "Controlling Document" are uncontrolled. When using this document verify that the revision matches the revision in the controlled version found on Livelink®.

Solid wastes are produced as a byproduct of this treatment system and will be collected from the normal operation of the MSD and disposed onshore in compliance with the Waste Management Plan. The MSD is to be inspected annually by a third party competent person with a valid certificate of inspection available upon request.

Housekeeping measures include:

- using only cleaners that are compatible with the treatment system,
- keeping the treatment system free of debris,
- periodically inspecting and/or changing filters where applicable,
- using only marine biodegradable toilet paper,
- regularly checking the amperage and
- if the system is back-flushed: cells will be inspected and the flow rate observed, as directed by manufacturer or annually.

Visual inspection of the receiving water will be conducted daily, during daylight hours at the times of maximum discharge to verify no foam, floating solids or garbage is discharged. Visual inspections of piping and joints will be performed to confirm placards are placed where needed and to verify that valves and tagging exist to prevent spills and leaks. Monitoring data will be recorded. Inspection observations will be recorded on the NPDES Master Spreadsheet. Completed NPDES Master Spreadsheets will be forwarded to Shell.

7.4 Domestic Wastewater (Discharge 004)

Domestic wastewater (gray water) is defined as materials discharged from showers, sinks, safety showers, eye-wash stations, hand-wash stations, galleys, and laundries. It is also generated in food preparation areas. The volume of these wastes varies widely with time and the assigned ship's occupancy. Domestic wastewater is discharged continuously from the stern starboard-side port.

Housekeeping measures include:

- solid food will be prevented from being washed down the sinks,
- sinks with grease traps in place,
- grease traps will be cleaned routinely or as needed and
- only compatible cleaners will be used.

Visual inspections of piping and joints will be performed to prevent spills and leaks. Placards will be placed at kitchen sinks identifying prohibited products and discharge guidelines. All on-site monitoring will be recorded routinely. Inspection observations will be recorded on the NPDES Master Spreadsheets. Completed NPDES Master Spreadsheets will be forwarded to Shell.

Items accumulated for disposal from the execution of the above housekeeping activities will be stored in appropriate disposal containers as provided in Shell's (Waste Management Plan) WMP and Noble's WMP. Transfer and ultimate disposal of any item noted above will comply with Shell Operations Plan S0011 – Marine Transportation Operations and Shell Operations Plan S0055 - Lifting and Hoisting Plan.

7.5 Desalination Unit and Evaporator Cooling Wastes (Discharge 005)

Desalination unit waste is concentrated salt created from processing seawater into freshwater. No chemicals are directly added to this system. The wastewater is composed of residual high-concentration brine similar to seawater in chemical composition.

Fresh water produced onboard the Noble Discoverer is from two reverse osmosis and two evaporator units. Water from the evaporator coolers have Ameroyal CF (0.03 liters) added to the system daily. The non-contact cooling water and the wastewater waste from the evaporators will co-mingle as a continuous discharge stream. A sample of this co-mingled waste will be taken from the bow along the port side of the vessel. When co-mingled discharge occurs, the NPDES Compliance Specialist will ensure that effluent limitations and monitoring requirements will follow the more restrictive Non-contact Cooling Water (Discharge 009) NPDES GP requirements.

7.6 Blowout Preventer Fluid (Discharge 006)

The blowout preventer (BOP) is an emergency hydraulic system that releases a lubricating discharge to actuate the well head control safety hydraulic equipment. The lubricating fluid is composed of a mixture made onboard to the manufacturer's recommendation of approximately 60%, water, 48% glycol and 2% Erifon HD603HP. The Erifon HD603HP is a concentrate stored onboard in two tanks. The main large storage tank is automated to a smaller working day tank for mixing purposes. Glycol is also in a large volume tank that is automated into the day tank when volume levels are low. The glycol bulk tank and the day tank have sight glasses to assist in volume measurements. The automated make-up BOP fluid system ensures a certain volume is readily available.

The BOP is required to be function tested weekly and prior to deployment. This small amount of effluent will either be captured on rig in a contained space or area or surface-water sampled during testing. Once the BOP is deployed, all releases will occur below surface water at the top of the wellhead during function tests.

7.7 Boiler Blowdown (Discharge 007)

Conducting boiler blowdown is required for ensuring proper maintenance of the boiler. Boiler blowdown occurs nearly daily and consists of water and minerals drained from boilers and discharged directly overboard. Ameroyal CF is used in boilers for proper maintenance. Discharge occurs below the sea surface on the port side of the vessel as a high pressure, high temperature steam and has been determined to be a non-regulated discharge.

CAUTION: All hardcopies of "Controlling Document" are uncontrolled. When using this document verify that the revision matches the revision in the controlled version found on Livelink®.

7.8 Fire Control System Test Water (Discharge 008)

The fire control test system consists of untreated seawater released during the training of personnel in fire protection and the testing and maintenance of fire protection equipment. Effluent will either go directly overboard or will be collected on the decks and be piped to the deck drainage system for discharge. No biocides or chemicals will be added to this system. U.S. Coast Guard requires this system to be tested once per month; the vessel may conduct tests by sections or more frequently than required.

7.9 Non-contact Cooling Water (Discharge 009)

Closed fresh water cooling jackets are used for primary cooling of engines and machinery equipment onboard the *Noble Discoverer*. A heat exchanger exists between the closed primary cooling jackets and open secondary seawater loops. No intermixing of fresh and saltwater occurs between the primary and secondary loops. Also, no biocides are added to the secondary cooling loops. Independent digital flow meters along with temperature sensors have been installed on several discharge lines to monitor flow and temperature (see Table 4-1).

A sea chest on the vessel's port side located at approximately 28 feet below surface holds seawater that is pumped into secondary loops. A Sea Suction Strainer/Colander has been installed on the sea chest to prevent "sizeable" sea life from being affected by seawater uptake or discharge back to the chest.

Secondary cooling loops from the HVAC units, cement units, compressors, rectifiers and hydraulic equipment discharge continuously from the port or starboard sides of the vessel and above the sea surface. The secondary cooling loops for the main engine and cement units discharge into the sea chest.

7.10 Uncontaminated Ballast Water (Discharge 010)

Ballast water consists of seawater added or removed to maintain proper float, level, and ship draft. This water is authorized for discharge as needed, but is not intended to be discharged regularly. Ballast water is discharged above sea level amidships toward bow and on the port side. No biocides or chemicals will be added to this system.

Water intake/exchange activity in the ballast tanks of the *Noble Discoverer* will be performed in transit to Alaska to prevent entrapment and introduction of any invasive species into the Chukchi Sea.

7.11 Bilge Water (Discharge 011)

Bilge consists of water that collects in the lower internal parts of the drilling vessel and must pass through oil/water separators prior to discharge. As such the bilge discharge will occur daily or weekly from the OWS (starboard stern, below sea-level). No biocides or chemicals will be added to this system.

7.12 Excess Cement Slurry (Discharge 012)

Excess cement slurry is the rinsate coming off equipment during wash-down after a cementing operation. Sample will be obtained and tested prior to discharge. Effluent may be combined with non-contact cooling water and discharged at amidships on the port side below the sea surface.

7.13 Muds, Cuttings and Cement at Seafloor (Discharge 013)

These materials are discharged at the ocean floor in early phases of drilling operations, before the riser is deployed and during well abandonment and plugging. This discharge is estimated to occur for 12 to 15 days per well and will be monitored and recorded to demonstrate compliance with the NPDES GP.

CAUTION: All hardcopies of "Controlling Document" are uncontrolled. When using this document verify that the revision matches the revision in the controlled version found on Livelink®.

This page intentionally left blank.

CAUTION: All hardcopies of "Controlling Document" are uncontrolled. When using this document verify that the revision matches the revision in the controlled version found on Livelink®.

8. Housekeeping Practices

8.1 Waste Minimization Practices (WMP)

Waste minimization utilizes source reduction, recycling, and reuse to reduce the potential for pollution prior to its generation. Source reduction includes, but is not limited to, process modification, raw material substitution, and energy conservation which lead to a reduction in the amount and/or toxicity of a process residual. Source reduction can be achieved by using chemicals effectively and by operating and maintaining treatment systems according to equipment manuals. Recycle and reuse involves the reclamation or reuse of process residuals for beneficial purposes. Useful constituents of a residual, such as hydrocarbons, may be reclaimed for reuse. For specific guidance and understanding of waste minimization requirements, refer to requirements set forth in Shell's WMP and Noble's WMP.

8.2 Work Areas

Good housekeeping means maintaining clean and orderly work areas. With good housekeeping, it is easy to move around work areas, materials and equipment are easy to locate and operate the potential for spills and leaks is reduced, operational conditions prevent impacts to marine life and work areas are safer for workers.

Good housekeeping practices include:

- orderly storage of chemicals and other materials,
- designated areas for materials and activities,
- proper labeling of areas, equipment, and materials,
- prompt cleanup of spills and leaks,
- drip pans and
- routine inspections to verify that practices are being implemented and to detect any problems needing attention.

Segregation of municipal solid waste, nonhazardous waste, and hazardous waste will follow the waste management procedures in Shell's WMP and Noble's WMP. No overboard discharge of solid waste will take place except for permitted discharges during the Alaska exploration project. Domestic solid waste will be transferred to service vessels and disposed of in approved permitted solid waste units onshore. Recyclable hazardous materials, such as absorbent pads, batteries, fluorescent lamps, and used oil will be segregated and shipped to an approved onshore facility.

Shell's current WMP lists recycling options to be utilized whenever possible for OCS operations. The list of recyclable material includes the following:

- lubricating oil and filters,
- drilling fluid additives and
- scrap metal and drums.

CAUTION: All hardcopies of "Controlling Document" are uncontrolled. When using this document verify that the revision matches the revision in the controlled version found on Livelink®.

Good housekeeping practices for drilling fluid pits and the solids control system were described in earlier chapters of this BMP Plan. For specific guidance and understanding of waste minimization requirements, refer to requirements set forth in Shell's WMP and Noble's WMP.

8.3 Vessel Housekeeping

The Noble's Safety Policy Manual (SPM) contains SOPs for vessel housekeeping operations. The following housekeeping SOPs for chemical and waste handling procedures will be utilized for other areas of the vessel not previously described:

- housekeeping (SPM-809),
- hazardous materials handling (SPM 704),
- containment of hydrocarbons and chemicals (SPM-901),
- drainage and discharge (SPM-902),
- spills (SPM-903),
- emissions (SPM-904),
- recycling and waste reduction (SPM-905),
- HSE assessments and audits (SPM-1001) and
- operation control & safe systems of work –Isolations (SPM-502).

8.4 Loading Stations

Load stations and loading equipment on the *Noble Discoverer* will follow Shell's OPS011 standard for the transfer of material while in port or offshore. Standards for hoses include:

- all bulk hoses used for offshore loading must have internally swaged or other approved clamp fittings,
- hoses used for transfer of hazardous material or oil products shall meet the requirements of 33 CFR 155.800,
- hoses shall be pressure tested onshore at least every 12 months, and
- hazardous material cargo hoses must have dry-loc disconnection couplers.

Prior to transferring any material while offshore, Noble will follow the PTW system along with Shell's standard operating procedures outlined in OPS011.

8.5 Material Compatibility and Storage

Proper storage and handling of laboratory and industrial chemicals will reduce the potential for personnel and environmental accidents. A chemical inventory will be kept on board that details each chemical product, unit amount, and location by locker unit. Six basic principles will be followed for chemical use on the *Noble Discoverer*:

- only necessary amounts of chemicals for safe operation will be stored,
- chemicals will be transferred from bulk containers to smaller containers for controlled use,
- all containers will be inspected for required labeling,
- incompatible chemicals will be segregated,
- personal protective equipment (PPE) will be used when identified on the MSDS or SDS and
- adequate spill response/clean-up materials will be accessible.

Shell policy requires a Permit to Work (PTW) when planning a task that is outside of routine duties. This PTW system will be used by personnel when handling and segregating chemicals for storage, transferring into containers, and labeling.

Storage requirements for chemicals aboard the *Noble Discoverer* include:

- flammable liquids will be stored in metal cabinets away from heat or ignition sources and provided with proper ventilation,
- bases and acids will be stored separately,
- oxidizers will be separated from organic compounds,
- special precautions will be taken for peroxides, peroxide forming compounds, and especially organic peroxides,
- chemicals reactive with water or air (such as sodium or phosphorus) will have special handling and storage according to labeling and the MSDS or SDS and
- gas cylinders will be properly labeled and double fastened to the wall or cabinet that has been bolted to the floor. When not in use, cylinders will be capped to protect the stem.

8.6 Chemical Product Handling

Chemical products are limited onboard and do require special handling and storage. The personnel handling chemicals aboard the *Noble Discoverer* will have the training, knowledge, and appropriate PPE for safe use and handling. For storage purposes, often a secondary container can provide the protective barrier between incompatible chemicals. The MSDS or SDS provides guidance for storage and handling as well as spill clean-up procedures.

Shell, Noble and M-I SWACO provide training manuals and information for their respective employees' use and ensure compliance. Storage of chemicals and hazardous materials will be in compliance with Shell's Standard Operations Plan S0011 Rev 2 – Marine Transportation Operations, Noble Procedure SPM-901 Containment of Hydrocarbons and Chemicals, and Noble's Waste Management Manual.

CAUTION: All hardcopies of "Controlling Document" are uncontrolled. When using this document verify that the revision matches the revision in the controlled version found on Livelink®.

This page intentionally left blank

CAUTION: All hardcopies of "Controlling Document" are uncontrolled. When using this document verify that the revision matches the revision in the controlled version found on Livelink®.

9. Preventative Maintenance and Operation

Preventative maintenance and proper operation of equipment can reduce the potential for impacts to the environment and marine life, prevent minor losses of materials from leaks and spills, and minimize waste streams from treatment systems. Equipment that is maintained and operated properly is cleaner and less prone to leaking, spilling, and generating waste. Some preventative maintenance practices would also be considered good housekeeping practices (keeping valves and fittings from leaking, for example); however, this BMP Plan does not make a strict distinction between the two. A description of preventative maintenance and the operations of some equipment are provided below.

9.1 Cooling Water Intake

The *Noble Discoverer* was built in 1965, so the volume limits for cooling water intake in the permit is not applicable. On this drillship, cooling water comes from openings in the hull located approximately 28 feet below the surface that flows into Sea Chests that acts as a storage tank prior to entry into the specific requirement. This opening is screened and therefore, unlikely for any marine life to be entrapped in the tank. From the storage tank, cooling water is pumped to cool engines. Water intake/exchange activity will be performed while the vessel is in transit to Alaska only. The main engine will not be operated except in an emergency situation while anchored.

9.2 Deck Drainage Processor

Deck drainage processor is designed to separate out the liquid effluent into three segregated streams:

- dense / semi-solid,
- free-oil, and
- water.

Once the fluid is separated, the recovered dense / semi-solid material will be containerized and disposed of onshore. Fluid that contains greater than 15ppm free oil is further processed by the OWS.

9.3 Oil / Water Separators

There are two oil/water separators on the vessel for separating small amounts of wastewater and drilling fluid spills from the deck. One OWS is located in the main engine room for processing liquids that drain to the bilge and the other is located in the compressor room to handle deck drainage. Both OWS have a holding tank that recirculates effluent until 15 ppm free oil or less is achieved prior to discharge. The oil collection tank is located directly below the each separator.

Liquids from the decks, shakers, and rig floor will be processed through the OWS located in the compressor room as needed. Other sumps on the rig that could possibly contain oily waste water also feed into a separator in the main engine room.

9.4 Lubricating Oil Purification Units

Lubricating oil purification units will be used to reduce the number of engine oil changes and oil filter replacement, reducing the volume of used oil generated.

9.5 Chemical Storage Areas

Additives and chemicals will be properly stored and protected to minimize uncontrolled releases or potential weather impact. Particular attention will be given to loading and unloading dry or wet chemicals during operation. Standard procedure for chemical transfer includes securing the area and maintaining spill response equipment on hand during the operation. MSDS and or SDS will be readily available to confirm proper storage of all hazardous materials and will be located online as well as in hardcopy in areas where chemicals are stored / used. All chemicals onboard are managed in accordance to the permit or the manufacturer's safety data information.

Chemical storage areas and hazardous materials will be segregated to prevent incompatible materials from being stored together. For specific guidance and understanding of proper storage of hazardous materials, refer to the product MSDS or SDS and Noble's Safety Policy Manual. For waste minimization requirements, refer to requirements described in Shell's WMP, Noble's WMP, and the Noble's Safety Policy Manual.

9.6 Equipment Spillage and Leak Prevention

Combustion engine, pump bearings, seals, and hydraulic equipment are fitted with drip pans and containment devices. Examples include drip pans beneath lubricating oil systems on engines and containment vessels or dikes under fuel and chemical storage areas. Regularly scheduled preventative maintenance on equipment, pumps, piping systems, hoses, and valves will reduce the potential for leaks or releases of chemicals to containment systems or to the environment. Routine inspection will verify proper equipment operation and implementation of corrective action if required.

9.7 Pipe Dope

Only lead-free pipe dope will be used for drill pipe connections. A stringent control program has been established to confirm proper application, container handling, and final disposal of excess dope material.

9.8 Loss of Drilling Fluid

Drill pipe trips in and out of the hole can contribute to excess drilling fluid waste on the rig floor. The outer surface diameter of the pipe will be wiped clean, as necessary, under safe conditions while pulling out the pipe, reducing the spilled drilling fluid and the need for rig wash.

9.9 Cathodic Protection

Noble will maintain proper cathodic protection to prevent the corrosion of the ship's hull. Sacrificial anodes were installed on the underwater portions of the hull during the 2014 shipyard period.

10. Equipment Failure & Repair

10.1 Equipment Failure or Discharge Limit Exceeded

All discharges are managed in accordance with the requirements of the NPDES GP.

During regular drilling operations, drilling fluid and cuttings from the shale shakers, the drilling fluid cleaner unit, and the fines removal unit (High Speed Centrifuge) will be discharged. Cement washdown water, cement mix water and cement unit cooling water are discharged through the cement unit overboard line. Other discharges from the vessel will originate from deck drainage, MSD, oil/water separators, desalination units, BOP, boilers, fire control test water system non-contact cooling water system, and ballast tanks.

Shell and the Shell Drilling Engineer will be notified IMMEDIATELY when:

- excess drilling fluid and fluid volumes are over the established hourly limits,
- any one piece of equipment breaks down multiple times during operations, or
- other circumstance to result in significant amount of a pollutant reaching surface water.

An engineering review and analysis of the problem may be warranted.

If any of the discharge limits are exceeded or if other suspected BMP Plan non-compliance or modification occurs, Shell must be called immediately. Such notice includes:

- any non-compliance that endangers health or environment,
- any unanticipated bypass or upset that exceeds any effluent limitation in the NPDES GP (see Section V.F, "Bypass of Treatment Facilities" in NPDES GP),
- any activity that causes an upset that exceeds any effluent limitation in the NPDES GP (see Section V.G, "Upset Conditions");
- any violation of a maximum daily discharge limitation for any of the pollutants in Section II of the NPDES GP requiring 24-hour reporting or
- any activity that would result in a discharge, on a routine or frequent basis, of any toxic pollutant that is not allowed in the NPDES GP, but exceeds the highest of the notification levels found in Section III.H.1. and 2. of the NPDES GP.

In addition, if a circumstance results in significant amount of a pollutant reaching the surface, the NPDES Compliance Specialist will record the direction, rate of flow and total quantity of the pollutant estimated to be discharged from the vessel as a result of the condition or circumstance.

Depending upon the circumstances, the BMP Plan may require modification within 14 days in accordance with the NPDES GP requirements. For detailed information on the NPDES GP Discharge Limitations and Prohibitions, see Section III, Drilling and Workover Operations of the Alaska OCS Environmental Compliance Manual (ECM); and this BMP Plan Section 4, Discharge Management.

10.2 Equipment Repair / Servicing (Preventative Maintenance)

All discharge equipment downtime will be reported on the NPDES Master Spreadsheet for the specific piece of equipment.

If MSD unit fails or sample results return out of compliance, the black water holding tank can hold up to 20 days of raw black water to allow system repair or batch discharge to a support vessel.

The solids control equipment manages solids and minimize low gravity solids. If this equipment is in need of servicing, the following discharge options are listed below:

- continue to operate only if within discharge limitations as stated under the BMP Plan through the end of the entire interval drilled with drilling fluids and,
- discontinue discharge of any specific waste stream if that waste stream is not within discharge limitations. Collect and containerize in place of discharging. Discharge may continue after repair and/or servicing of equipment.

All drilling fluid, cutting discharges and equipment downtime will be reported on the NPDES Master Spreadsheet for the specific piece of equipment.

10.2.1 Shale Shaker

In case of failure or servicing of a shale shaker, the unit will be taken off-line. Discharge from the shaker will resume after it has been repaired/serviced.

10.2.2 High-Speed Centrifuge

In case of failure or servicing of the high-speed centrifuge, the unit will be taken off-line and flow will be differed to the remaining high-speed centrifuge in operation. Discharge from the high-speed centrifuge will resume after it has been repaired/serviced.

10.3 Detailed Contingency and Drilling fluids and Cuttings Containment Plan

Preventative maintenance of all SCE must be performed in accordance with manufacturer's specifications as demonstrated by the preventative maintenance records of Noble; who is responsible for operating, maintaining, and repairing the SCE.

This requirement and those specified in Section 6, must be verified prior to discharging drilling fluids and cuttings over shakers when equipment is being routinely maintained or repaired.

10.4 Materials Handling and Records/ Equipment Failure/Discharge Records

Noble is responsible for record keeping for all equipment failures. Any equipment failures must be documented on the NPDES Master Spreadsheet and copies submitted to Shell.

All discharge records will document when a no discharge event is observed.

10.4.1 Contingency Plan Records

Noble is responsible for contingency planning, preventative maintenance and record keeping for all equipment failures.

10.4.2 Waste Manifest Records

Copies of waste manifests are kept on file at Shell.

CAUTION: All hardcopies of "Controlling Document" are uncontrolled. When using this document verify that the revision matches the revision in the controlled version found on Livelink®.

This page intentionally left blank.

CAUTION: All hardcopies of "Controlling Document" are uncontrolled. When using this document verify that the revision matches the revision in the controlled version found on Livelink®.

11. Documentation and Recordkeeping

The NPDES GP starts on the date and time when the first anchor is set at the drill site and continues until the last anchor is removed from this location. Inspections of all discharge sources will be conducted at times of occurrence or routinely monitored for leaks when not discharging.

A copy of this BMP Plan and its related documentation will be maintained by the facility operator and will be made available to EPA upon request. All NPDES GP required BMP records will be retained by Shell.

11.1 Required Reporting

Required reporting includes written information contained in the DMR and/or in correspondence. Information that must be reported is listed in the following tables.

Table 11-1 Reporting Tables

Records for General Housekeeping
• Inspection records for general housekeeping. • Documentation regarding BMP (re-)evaluation. • Feedback records for BMP improvement.

Table 11-2 Discharges with Cuttings

BMP Records for Discharges Associated with Cuttings
• Inspection / equipment maintenance / repair records for drilling fluid pits and solid control equipment. • Drilling fluid / cuttings housekeeping records. • Sampling and laboratory testing records. • Training records related to BMPs.

In addition to the routine data submitted to Shell for compilation and reporting, the following sampling data will be reported to Shell each month:

- required monthly sampling results,
- data from samples collected more frequently than required by the NPDES GP and
- in-house data that complies with EPA analytical method requirements.

Documentation and records related to general issues, the drilling fluid pits, and the solids control system are listed in the tables below, in corresponding sections of the BMP Plan.

CAUTION: All hardcopies of "Controlling Document" are uncontrolled. When using this document verify that the revision matches the revision in the controlled version found on Livelink®.

Table 11-3 Discharges without Cuttings

Records for NPDES Discharges Not Associated with Cuttings

• Inspection / equipment maintenance / repair records for rig / drill floor.
• Inspection / equipment maintenance / repair records for pumps & mixing areas.
• Inspection / equipment maintenance / repair records for drilling fluid pits.
• Inspection / equipment maintenance / repair records for fluid transfers.
• Drilling fluid Discharges.
• The NPDES Master Spreadsheet and laboratory testing records covering:
  o deck drainage discharge,
  o sanitary and domestic waste,
  o desalination unit waste,
  o blowout preventer fluid,
  o non-contact cooling water,
  o uncontaminated ballast water,
  o boiler blowdown,
  o fire control test water,
  o bilge water discharge,
  o excess cement slurry discharge.
• Training records related to BMPs.

11.2 Housekeeping Reporting

Housekeeping inspection of work areas and equipment must be completed routinely during operations, maintenance, and repair. Facility personnel will follow standardized monitoring, sampling and record keeping procedures related to each discharge.

General housekeeping, rig floor and mixing area activities will be noted and recorded on the NPDES Master Spreadsheet, will be kept as part of this BMP, and will be kept on file at Shell and on the rig. The housekeeping monitoring results will be reported on the NPDES Master Spreadsheet.

The Offshore Installation Manager will be responsible for ensuring the inspections and maintenance are complete and records are maintained, although they may delegate certain tasks to qualified individuals. Delegations of these responsibilities can be found in existing Noble operating procedures and policies.

CAUTION: All hardcopies of "Controlling Document" are uncontrolled. When using this document verify that the revision matches the revision in the controlled version found on Livelink®.

All records regarding the drilling fluid equipment will be completed and collected from Noble by the NPDES Compliance Specialist. Noble is responsible for all operations, maintenance and repairs to all the drilling fluid equipment installed on the vessel. These records are required by both the NPDES GP and this BMP Plan. Copies will be maintained on the rig by the NPDES Compliance Specialist transferred to Shell.

Inspections of all discharge sources will be monitored at times while on-site in accordance with the provisions of the NPDES GP. Each of the discharges observation/tests and analytical results will be recorded to verify compliance of the NPDES GP.

11.3 Non-Compliance or Change in Discharge Toxicity Notifications

If any of the discharge limits are exceeded or if other suspected BMP Plan non-compliance or modification occurs (See Section 10, Equipment Failure & Repair), Shell must be notified immediately at (907) 830-7435. If NPDES GP non-compliance occurs, Shell will complete and file the necessary reports with the EPA in accordance with permit requirements.

11.4 Associated Documentation and Manuals

Other documents or manuals that contain related pollution prevention measures include:

- Shell's Exploration Plan,
- Shell's Oil Spill Response Plan, and
- Shell and Nobles' Waste Management Manuals.

In addition, relevant Shell, M-I SWACO, and Noble procedures, documents, policies, and manuals applicable to the requirements of the NPDES GP, are incorporated by reference in this BMP (as listed in Section 13) and are maintained at the facility and for Shell documents, at Shell.

11.5 Records Retention

Pursuant to permit regulations, records will be retained by Shell for a period of at least five years from the date of the sample, measurement, report, or application, whichever is longer. Records are maintained electronically and/or in hardcopy. Record retention includes:

- copies of all reports required by the permit (DMRs, etc.),
- a copy of the NPDES GP,
- records of all data used to complete the application for this permit,
- original monitoring data, including operator routine duties, operator log books, electronic data capture, or other documents in which monitoring data such as sheen test results are first noted,
- monthly facility flow tables,
- all analytical data packages,
- chain-of-custody forms,

CAUTION: All hardcopies of "Controlling Document" are uncontrolled. When using this document verify that the revision matches the revision in the controlled version found on Livelink®.

- logs or other documents used to originally record flow meter readings,
- calibration and maintenance records of equipment as they relate to measurement of volume or monitoring quality and
- NPDES-related training records.

The NPDES GP requires that traceable records of routine and non-routine discharges be maintained. Shell is responsible for all compliance reporting. Monitoring results will be summarized on the DMR form, EPA No. 3320-1 or equivalent, on a monthly basis, and postmarked by the 20th day of the following month. Annual sampling results will be reported on the January DMR of the following year. All records of monitoring information shall be retained by the permittee at least 5 years from the date of the sample, measurement, report, or application.

All noncompliance of the NPDES GP, as detailed in Section 10.3, will be reported to EPA by telephone within 24 hours from the time of occurrence. This includes any unanticipated bypass or upset that exceeds discharge limitations in the permit or any violation of maximum daily discharge limitations for any of the pollutants requiring 24-hour reporting as listed in Part 1 of the NPDES GP.

12. Training

Field personnel will be made aware of the NPDES GP related activities with the goal of pollution prevention and waste minimization. Having personnel that have participated in training activities will verify the efficient and effective operation of treatment systems and will ultimately minimize the risk of pollutants discharged to the Chukchi Sea. In accordance with the EPA Guidance Manual for Developing BMP Plan, the focus of the BMP Plan training will be to confirm an understanding of the BMP Plan, including the reasons for developing the BMP Plan, the positive impacts of the BMP Plan, and employee and managerial responsibilities under the BMP Plan.

12.1 Training Programs

An overview of environmental requirements will be provided by Shell and Shell's contractors to all individuals participating in the exploration program involving the *Noble Discoverer*.

Note that training involves individuals of all levels of responsibility. Table 12-1 provides an overview of initial training programs developed and executed to date. Training will be established after the BMP is approved and signed by the Shell Senior Drilling Engineer.

The Tier 1 level of training, Environmental Awareness, is a high-level overview of the types of regulatory programs that are applicable to operations, a high-level description of the mitigation measures that are required, and general reporting structure. This series is intended to provide a general familiarity of the programs that employees and contractors must adhere to. For example, remote personnel and department leads would benefit from taking this training.

The Tier 2 level of training, Environmental Leadership, provides a greater level of awareness regarding each permit/authorization/ agreement. This training will provide a working knowledge of the NPDES GP, but will not provide an in-depth description of each permit requirement. It is recommended that leadership from companies on the rig that contribute to discharges overboard attend.

The Tier 3 level of training, specific NPDES instruction is intended for those with specialized duties and for those who need to know the details of particular permits, sampling requirements, reporting requirements, etc. (i.e. NPDES Compliance Specialist)

Refresher training will occur once crews mobilize to the drill rig. This training will be presented at several daily safety meetings to ensure that all personnel are aware of BMP requirements and general discharge restrictions.

Training will include material handling, equipment maintenance and repair, cleanup, inspections, and record keeping. Training programs for BMP management are listed in Table 12-1.

CAUTION: All hardcopies of "Controlling Document" are uncontrolled. When using this document verify that the revision matches the revision in the controlled version found on Livelink®.

Table 12-1 BMP Training Programs

Training Programs for BMPs			
Program	**Administered by**	**Subjects Covered**	**Target Audience**
BMP Training	Shell, Noble and M-I SWACO	1. Review of NPDES GP 2. Drilling fluid sampling & monitoring 3. BMP policy & implications 4. Best practices for all discharge equipment.	All personnel affected by the BMP
Shell's Alaska Compliance Manual (ACM) Training	Shell, Noble and M-I SWACO	1. Modification to Environmental Compliance Manual (ECM) 2. Compliance sampling & testing 3. Drilling fluid monitoring & reporting 4. BMP development & application	Drilling Managers, Superintendents, Engineers, Foremen, HSE Technicians, & NPDES Compliance Specialists
Compliance Training & Certification	Shell, Noble and M-I SWACO	BMP documentation & reporting drilling fluid and all regulated discharges	NPDES Compliance Specialist

12.2 Training Records

Training records for Shell employees can be found in the Shell's office in Anchorage. Original and current training records are maintained by Shell and Shell's Contractors. The refresher training records are maintained and held by each specific contractor.

Field Superintendents are responsible for maintaining required training records, although they may delegate certain tasks to qualified individuals (e.g., HSE technician, compliance engineer). Prior to and during the drilling of each new well, the Field Superintendent will verify that NPDES Compliance Specialists affected by this BMP have been trained on the requirements and document the training.

Execution of the BMP training responsibilities will follow existing Noble operating procedures and policies. Record keeping responsibilities will be conducted in accordance with Noble operating procedures and policies and will be in compliance with the substantive requirements set forth in the NPDES GP.

CAUTION: All hardcopies of "Controlling Document" are uncontrolled. When using this document verify that the revision matches the revision in the controlled version found on Livelink®.

13. Referenced Documents

13.1 Referenced Plans and Documents

All referenced corporate plans and documents may be requested by EPA for review. The following documents in Table 13-1 are incorporated into the BMP Plan by reference:

Table 13-1 Documents Reference

Document Title	Relation to BMP Plan
Shell - Alaska Compliance Manual (ACM)	Segregation of domestic and hazardous waste management procedures. Lists recycling options for lubes & filters, spent organic solvents, drilling additives, and scrap metal and drums.
Shell Contingency Response Waste Management Plan	Addresses the different resources (vessel and other support) for waste management and disposal from spill response.
Shell Alaska Venture Waste Management Plan	Contains policies and procedures for implementing waste management programs.
Shell - Quality Assurance Project Plan (QAPP)	Defines the quality assurance (QA) and quality control (QC) procedures that will ensure the quality of data obtained from field and laboratory analyses.
Shell – Environmental Monitoring Plan (EMP)	Oceanographic sampling and monitoring plan for collecting baseline data.
Shell –Training Execution Plan	Plan provides structure for the Alaska Venture to deliver required training.
Shell, Noble, and M-I SWACO SOPs, PTWs, and LWIs	Standard Operating Procedures (SOPs), Permits to Work (PTWs), and Local Work Instructions (LWIs) addressing the Chukchi Sea Exploration Program.
Shell Chukchi Sea Oil Spill Response Plan	A regional oil spill response plan for Shell's multi-year Chukchi Sea exploration drilling program
M-I SWACO Chukchi Drilling Fluid Plan	Contains information on the formulation and maintenance of the drilling fluid.
Noble Safety Policy Manual	Contains policies and standard operating procedures for housekeeping and chemical handling / storage aboard vessel
Noble's Waste Management Manual	Contains handling and storage procedures that are International Convention for the Prevention of Pollution from Ships (MARPOL) V compliant.
Noble Discharge Manual - Rev 13 Jun-04-2012	Controlled document addressing the *Noble Discoverer's* liquid waste handling.
Noble Training Matrix	Required training by job title.
Noble – Omni-Pure Sewage Treatment Unit	Certificate of Annual Inspection/Service.

CAUTION: All hardcopies of "Controlling Document" are uncontrolled. When using this document verify that the revision matches the revision in the controlled version found on Livelink®.

13.2 Safety Data Sheets

Copies of all MSDS or SDS are held in the Rig Manager's Office. Chemicals onboard are managed in accordance to the permit or applicable manufacturer's safety data information. Over all, the Noble Warehouseman is responsible for the general storing of all hazardous material on each vessel. Specific to the contract firms M-I SWACO and Halliburton, each are responsible for the use of their specific materials and will hold their specific MSDS or SDS.

CAUTION: All hardcopies of "Controlling Document" are uncontrolled. When using this document verify that the revision matches the revision in the controlled version found on Livelink®.

14. BMP Plan Modification & Annual Review

14.1 Certification and Annual Review Requirements

Certification of the BMP Plan will comply with the substantive requirements set forth by the NPDES GP, Part IV.B.4.b.

The BMP Plan will be reviewed no less than annually by the BMP Committee and updated as needed. The amended BMP Plan will include a certified statement that the above reviews have been completed and that the BMP Plan fulfills the requirements set forth in this NPDES GP. The certified statement includes the dated signatures of each BMP Committee member as certification of the reviews of the amended BMP Plan. All changes in the BMP Plan will be reported to EPA in writing with the annual certification. The permittee must submit a copy of the certified statement and a report of all changes in the BMP Plan to EPA and DEC with the December DMR.

14.2 Evaluation and Re-Evaluation of BMP Plan

The BMP reports and records will be routinely reviewed and evaluated to verify that the BMP Plan is effective in achieving the general objective of preventing and minimizing the discharge of wastes to the receiving waters and complies with all other BMP Plan requirements. Timely record reviews performed as part of the monthly DMR process will confirm that drilling fluid pits and SCE continue to operate as designed.

This evaluation should be conducted by members of the BMP Committee during "Drill the Well on Paper (DWOP)" exercises and during after action reviews (AAR). These reviews occur in conjunction with equipment vendors and/or industry specialists.

Upon updating, a revised copy is forwarded to the facility and to Shell's representative who contacts the facility NPDES Compliance Specialist to review and discuss the BMP Plan updates. Shell's representative will visit the facilities no less than once per year and with the NPDES Compliance Specialist, and will train the facility personnel on the BMP Plan and associated updates. Representatives from Shell may assist with the training by creating audiovisual presentations.

BMP Committee Members should keep each other informed on the effectiveness of the BMP Plan by regular communication sessions (e.g., on location during regular pre-tour meetings, off location during DWOPs, and in morning meetings as warranted), discussing the benefits generated by executing the BMP Plan (e.g., cost savings generated, reduced waste generator, etc.) and the need for BMP re-evaluation and modification.

14.3 Modifying the BMP Plan

This BMP Plan will be modified whenever there is a change in the facility or in the operation of the facility that significantly increases the generation of wastes or their uncontrolled release or potential release to the receiving waters. Shell will be contacted when the BMP Plan warrants modification. The BMP Plan is well-specific and will be reviewed prior to adding any new well and modified if warranted.

Modifications to the BMP Plan must be consistent with the applicable requirements for BMPs in the NPDES GP and 40 CFR 435 for the Alaska Chukchi Sea.

The BMP Plan will be recertified (i.e., a new certification page signed by the appropriate authority) if the BMP warrants modification. Equipment or procedure modifications made to address an incident, facility change that materially increases the generation of wastes or due to the potential release to the receiving water will be reported within 14 days of an incident or change. Modifications triggered by permit modifications will be certified and implemented within three months of the permit issuance.

Shell and the NPDES Compliance Specialist will be contacted IMMEDIATELY if the BMP Plan warrants evaluation and possible modification.

At a minimum, the BMP Plan will be reviewed during DWOPs prior to adding a new well to the BMP Plan, and when warranted, the BMP Plan will be modified prior to recertifying the BMP Plan.

14.4 Feedback Records and Continuous Improvement

All staff involved in the drilling operations at the *Noble Discoverer* will be given the opportunity to further improve the BMP towards the goal of minimized discharge. Feedback is to be given to the Supervisor on duty and will be kept as a part of the BMP documentation, to be considered during a standard BMP review or sooner if warranted. Questions regarding feedback can be directed to any of the BMP committee members.

Feedback reports are collected in this part of the BMP Plan and must be filed with Shell. They are to be used as guidance for BMP Plan improvement.

14.5 Documentation of Modifications

All documentation will be kept as a part of the BMP documentation filed by the NPDES Compliance Specialists onboard the rig and after the drilling season with Shell and will be available upon request by the EPA.

Appendix A

Diagrams and Discharge Volumes

for the *Noble Discoverer*

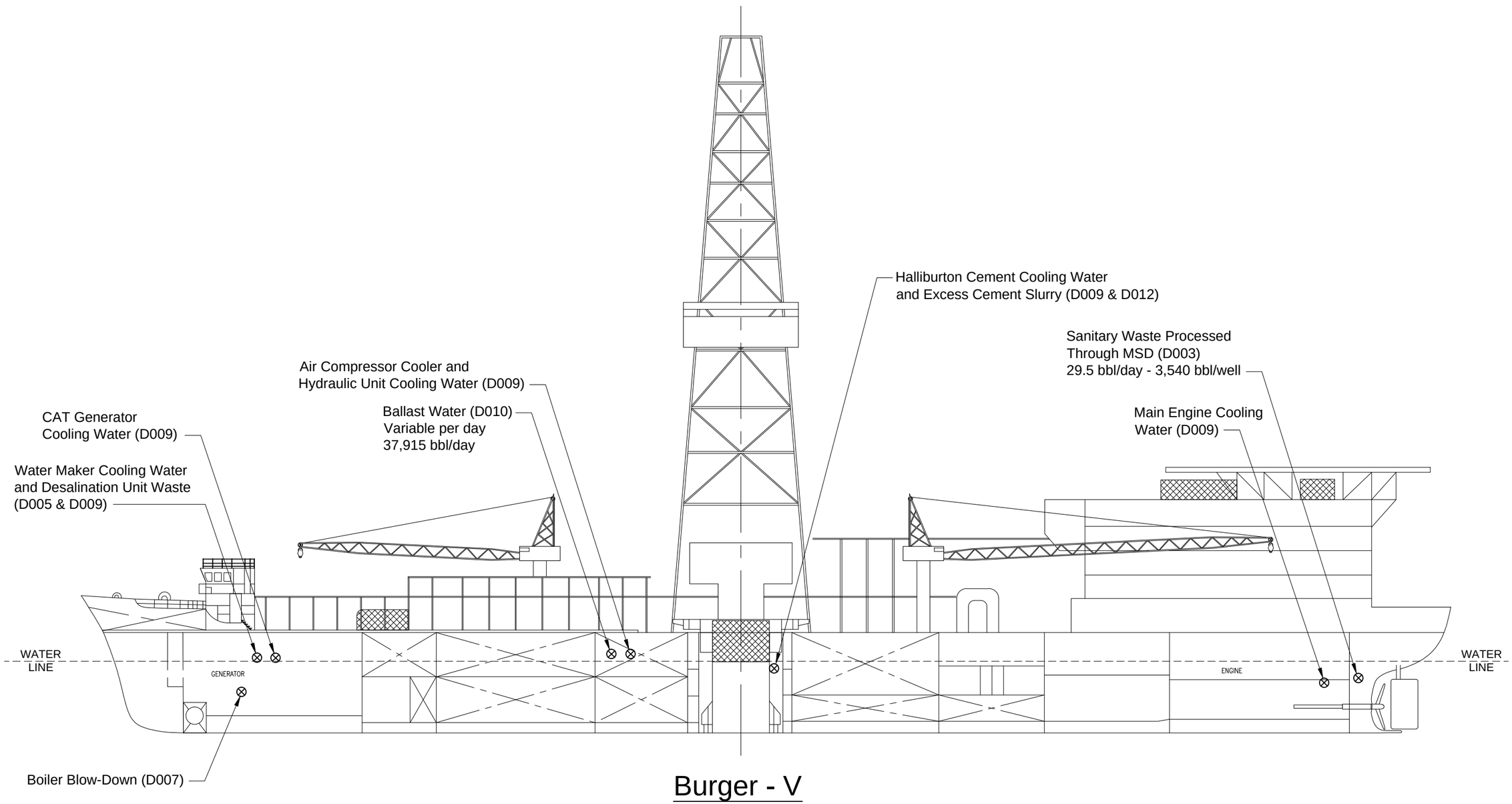

NOT TO SCALE

Mi SWACO
A Schlumberger Company

WESTON SOLUTIONS

DISCHARGE POINTS AND VOLUMES
***NOBLE DISCOVERER* (PORT)**

Figure
1

Apr 03, 2015 Drawn By: SJ K:\PROJECTS\Industrial-Commercial\Chukchi_Sea\MI SWACO\CAD\2015_Discoverer_Discharge-01.dwg

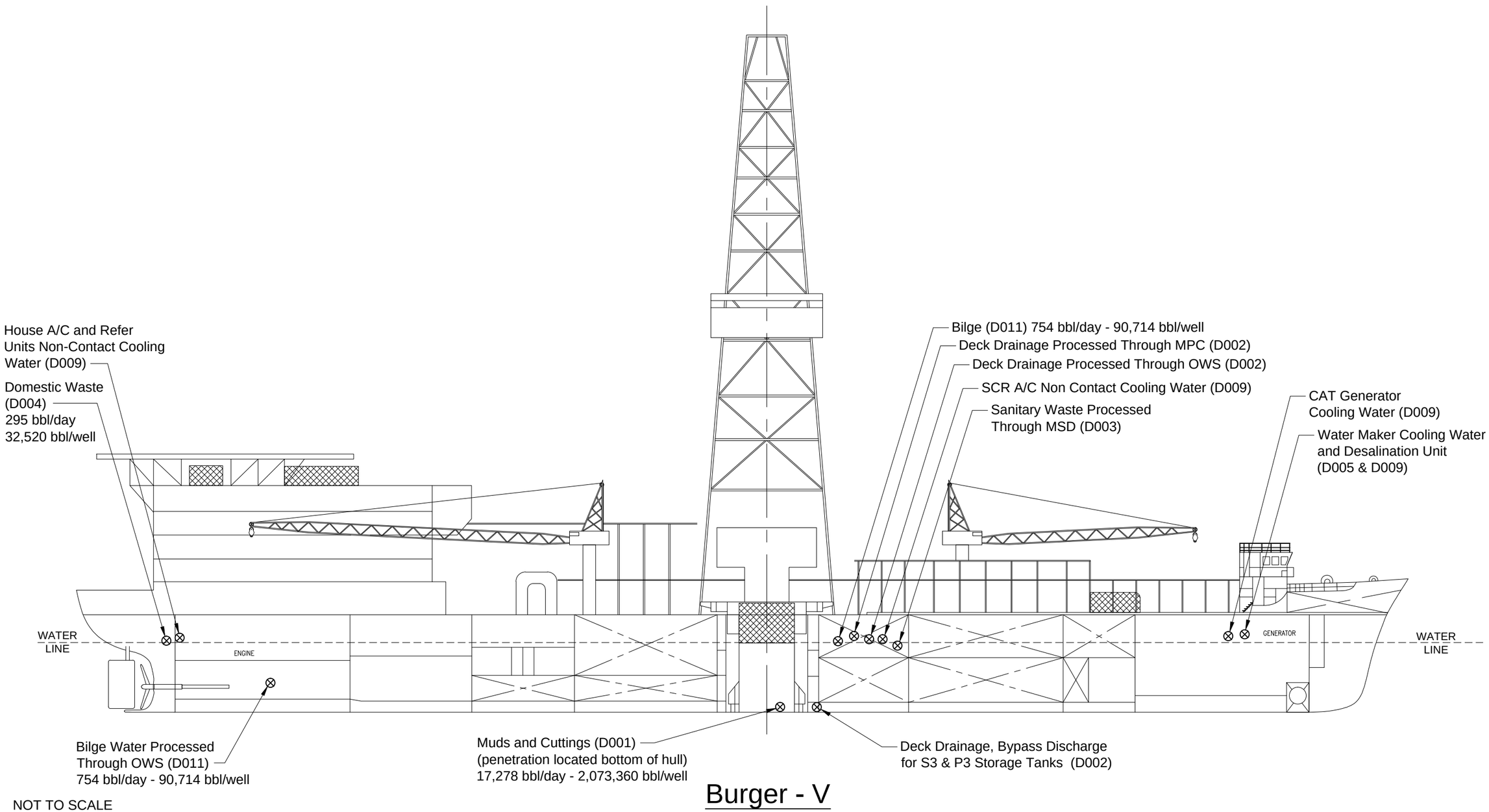

NOT TO SCALE

Mi SWACO
A Schlumberger Company

WESTON SOLUTIONS

DISCHARGE POINTS AND VOLUMES
***NOBLE DISCOVERER* (STARBOARD)**

Figure
2

Apr 03, 2015 Drawn By: SJ K:\PROJECTS\Industrial-Commercial\Chukchi_Sea\MI SWACO\CAD\2015_Discoverer_Discharge-01.dwg

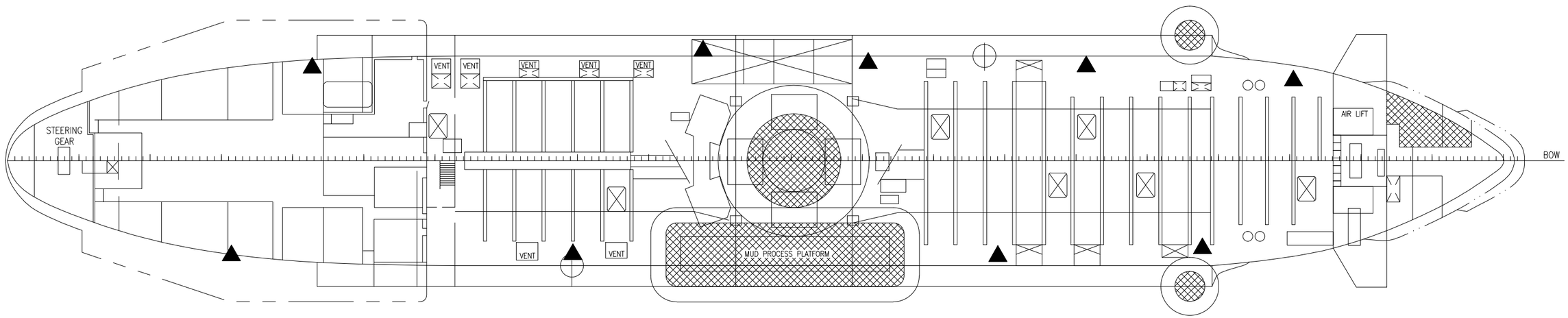

MAIN DECK

PLAN VIEW

▲ Visual Observation Location

NOT TO SCALE

Mi SWACO
A Schlumberger Company

WESTON SOLUTIONS

VISUAL OBSERVATION LOCATIONS
***NOBLE DISCOVERER* (MAIN DECK)**

Figure
3

Apr 07, 2015 Drawn By: SJ K:\PROJECTS\Industrial-Commercial\Chukchi_Sea\Mi SWACO\CAD\2015_Discoverer_Discharge-01.dwg

Table Error! No text of specified style in document.**-2 Estimated Discharge Volumes per Well**

Waste	Type	Burger F Well			Burger J Well			Burger S Well			Burger V Well		
		Volume	Rate	Seasonal Total	Volume	Rate	Seasonal Total	Volume	Rate	Seasonal Total	Volume	Rate	Seasonal Total
D001-1	Cuttings	1,043 bbl	81 bbl/hr	1,043 bbl	1,074 bbl	83 bbl/hr	1,074 bbl	1,153 bbl	88 bbl/hr	1,153 bbl	915 bbl	72 bbl/hr	915 bbl
D001-2	Fluids	6,184 bbl	81 bbl/hr	6,184 bbl	6,340 bbl	83 bbl/hr	6,340 bbl	6,736 bbl	88 bbl/hr	6,736 bbl	5,546 bbl	72 bbl/hr	5,546 bbl
D001-3	Reserve Pit	1,500 bbl	1,000 bbl/hr	1,500 bbl	1,500 bbl	1,000 bbl/hr	1,500 bbl	1,500 bbl	1,000 bbl/hr	1,500 bbl	1,500 bbl	1,000 bbl/hr	1,500 bbl
D002	Deck Drain	33 bbl/day	1.4 bbl/hr	3,960 bbl	33 bbl/day	1.4 bbl/hr	3,960 bbl	33 bbl/day	1.4 bbl/hr	3,960 bbl	33 bbl/day	1.4 bbl/hr	3,960 bbl
D003	Sanitary	29.5 bbl/day	1.2 bbl/hr	3,540 bbl	29.5 bbl/day	1.2 bbl/hr	3,540 bbl	29.5 bbl/day	1.2 bbl/hr	3,540 bbl	29.5 bbl/day	1.2 bbl/hr	3,540 bbl
D004	Domestic	295 bbl/day	12.3 bbl/hr	35,400 bbl	295 bbl/day	12.3 bbl/hr	35,400 bbl	295 bbl/day	12.3 bbl/hr	35,400 bbl	295 bbl/day	12.3 bbl/hr	35,400 bbl
D005	Desal / Evaps	1,742 bbl/day	72.6 bbl/hr	209,040 bbl	1,742 bbl/day	72.6 bbl/hr	209,040 bbl	1,742 bbl/day	72.6 bbl/hr	209,040 bbl	1,742 bbl/day	72.6 bbl/hr	209,040 bbl
D006	BOP	12.6 bbl/test	12.6 bbl/test	113 bbl	12.6 bbl/test	12.6 bbl/test	113 bbl	12.6 bbl/test	12.6 bbl/test	113 bbl	12.6 bbl/test	12.6 bbl/test	113 bbl
D007	Boiler	1.3 bbl/day	0.05 bbl/hr	151 bbl	1.3 bbl/day	0.05 bbl/hr	151 bbl	1.3 bbl/day	0.05 bbl/hr	151 bbl	1.3 bbl/day	0.05 bbl/hr	151 bbl
D008	Fire Test Water	36 bbl/test	36 bbl/test	607 bbl	36 bbl/test	36 bbl/test	607 bbl	36 bbl/test	36 bbl/test	607 bbl	36 bbl/test	36 bbl/test	607 bbl
D009-1	Generators - 1	17,486 bbl/day	714 bbl/hr	2,098,320 bbl	17,486 bbl/day	714 bbl/hr	2,098,320 bbl	17,486 bbl/day	714 bbl/hr	2,098,320 bbl	17,486 bbl/day	714 bbl/hr	2,098,320 bbl
D009-2	Generators - 2	17,486 bbl/day	714 bbl/hr	2,098,320 bbl	17,486 bbl/day	714 bbl/hr	2,098,320 bbl	17,486 bbl/day	714 bbl/hr	2,098,320 bbl	17,486 bbl/day	714 bbl/hr	2,098,320 bbl
D009-3	SCR & A/C	20,571 bbl/day	857 bbl/hr	2,468,520 bbl	20,571 bbl/day	857 bbl/hr	2,468,520 bbl	20,571 bbl/day	857 bbl/hr	2,468,520 bbl	20,571 bbl/day	857 bbl/hr	2,468,520 bbl
D009-4	Air Comp	17,142 bb/day	714 bbl/hr	2,057,040 bbl	17,142 bb/day	714 bbl/hr	2,057,040 bbl	17,142 bb/day	714 bbl/hr	2,057,040 bbl	17,142 bb/day	714 bbl/hr	2,057,040 bbl
D009-5	Cement Unit	343 bbl/day	14.3 bbl/hr	1,715 bbl	343 bbl/day	14.3 bbl/hr	1,715 bbl	343 bbl/day	14.3 bbl/hr	1,715 bbl	343 bbl/day	14.3 bbl/hr	1,715 bbl
D009-6	A/C & Refer	34,286 bbl/day	1,428 bbl/hr	4,114,320 bbl	34,286 bbl/day	1,428 bbl/hr	4,114,320 bbl	34,286 bbl/day	1,428 bbl/hr	4,114,320 bbl	34,286 bbl/day	1,428 bbl/hr	4,114,320 bbl
D010	Ballast Water	variable	variable	37,915 bbl	variable	variable	37,915 bbl	variable	variable	37,915 bbl	variable	variable	37,915 bbl
D011	Bilge Water	754 bbl/day	31.4 bbl/hr	90,714 bbl	754 bbl/day	31.4 bbl/hr	90,714 bbl	754 bbl/day	31.4 bbl/hr	90,714 bbl	754 bbl/day	31.4 bbl/hr	90,714 bbl
D012	Cement Slurry	45 bbl	10 bbl/hr	45 bbl	45 bbl	10 bbl/hr	45 bbl	45 bbl	10 bbl/hr	45 bbl	45 bbl	10 bbl/hr	45 bbl
D013-1	Cuttings	5,006 bbl	47.2 bbl/hr	5,006 bbl	5,005 bbl	47.1 bbl/hr	5,005 bbl	5,089 bbl	48 bbl/hr	5,089 bbl	5,089 bbl	48 bbl/hr	5,089 bbl
D013-2	Fluids	3,124 bbl	29.5 bbl/hr	3,124 bbl	3,123 bbl	29.4 bbl/hr	3,123 bbl	3,207 bbl	30.2 bbl/hr	3,207 bbl	3,207 bbl	30.2 bbl/hr	3,207 bbl
D013-3	Cement	45 bbl	10 bbl/hr	45 bbl	45 bbl	10 bbl/hr	45 bbl	45 bbl	10 bbl/hr	45 bbl	45 bbl	10 bbl/hr	45 bbl

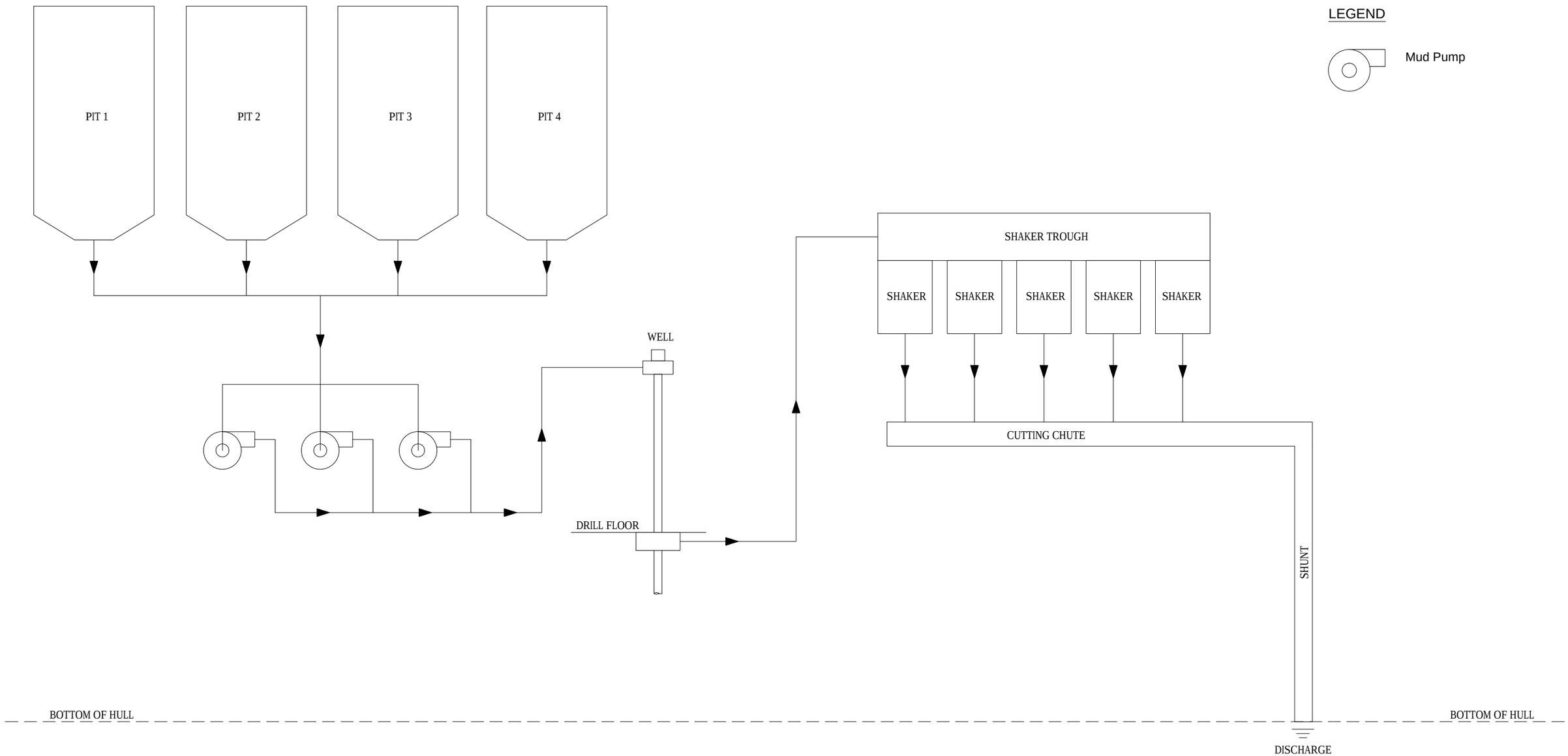

CUTTINGS AND FLUIDS DISCHARGE
Noble Discoverer

DESIGNER	DATE	CLIENT APPROVALS	DATE
PROJ. ENG. P. NELSON			
PROJ. MGR. B. BROOKS			
A.F. PROJ. MGR.			
DRAFTER S. JOHNSON	04-14-15		
CHECKED		ISSUED FOR	DATE

NO.	DATE	DRAFTER	REVISION

MI SWACO
A Schlumberger Company

Cuttings and Fluids Discharge
D001 - Noble Discoverer

DATE	DWG. NO.	REV. NO.
14 APR 2015	2015_Discoverer_Discharge-02.dwg	0
SCALE N.T.S.	W.O. NO. 13994.064.003	SHT. 1 OF 1

Apr 16, 2015 - 5:29pm
W:\MODCO\Modeller-Generic\Outputs\Sub\W 99000\W0\2015_Discoverer_Discharge-02.dwg

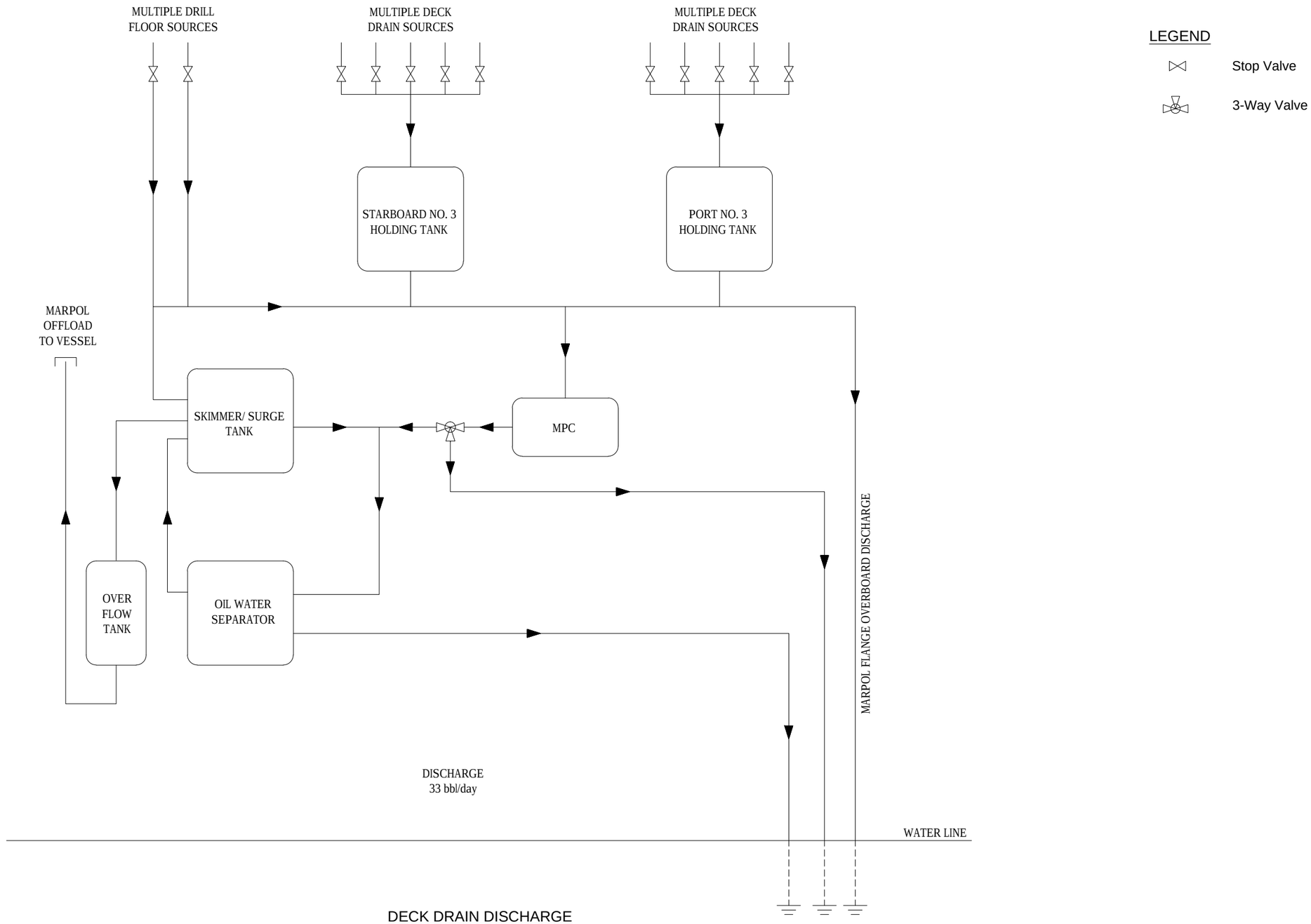

DECK DRAIN DISCHARGE
Noble Discoverer

DESIGNER		DATE	CLIENT APPROVALS	DATE
PROJ. ENG.	P. NELSON			
PROJ. MGR.	B. BROOKS			
A.F. PROJ. MGR.				
DRAFTER	S. JOHNSON	04-14-15		
CHECKED			ISSUED FOR	DATE

NO.	DATE	DRAFTER	REVISION

MI SWACO
A Schlumberger Company

Deck Drain Discharge
D002 - Noble Discoverer

DATE	DWG. NO.	REV. NO.
14 APR 2015	2015_Discoverer_Discharge-02.dwg	0
SCALE N.T.S.	W.O. NO. 13994.064.003	SHT. 1 OF 1

Apr 16, 2015 - 10:06am
J:\MMS\2015\Noble\Discoverer\Drawings\Deck_Drain\M SWACO\DWG\2015_Discoverer_Discharge-02.dwg

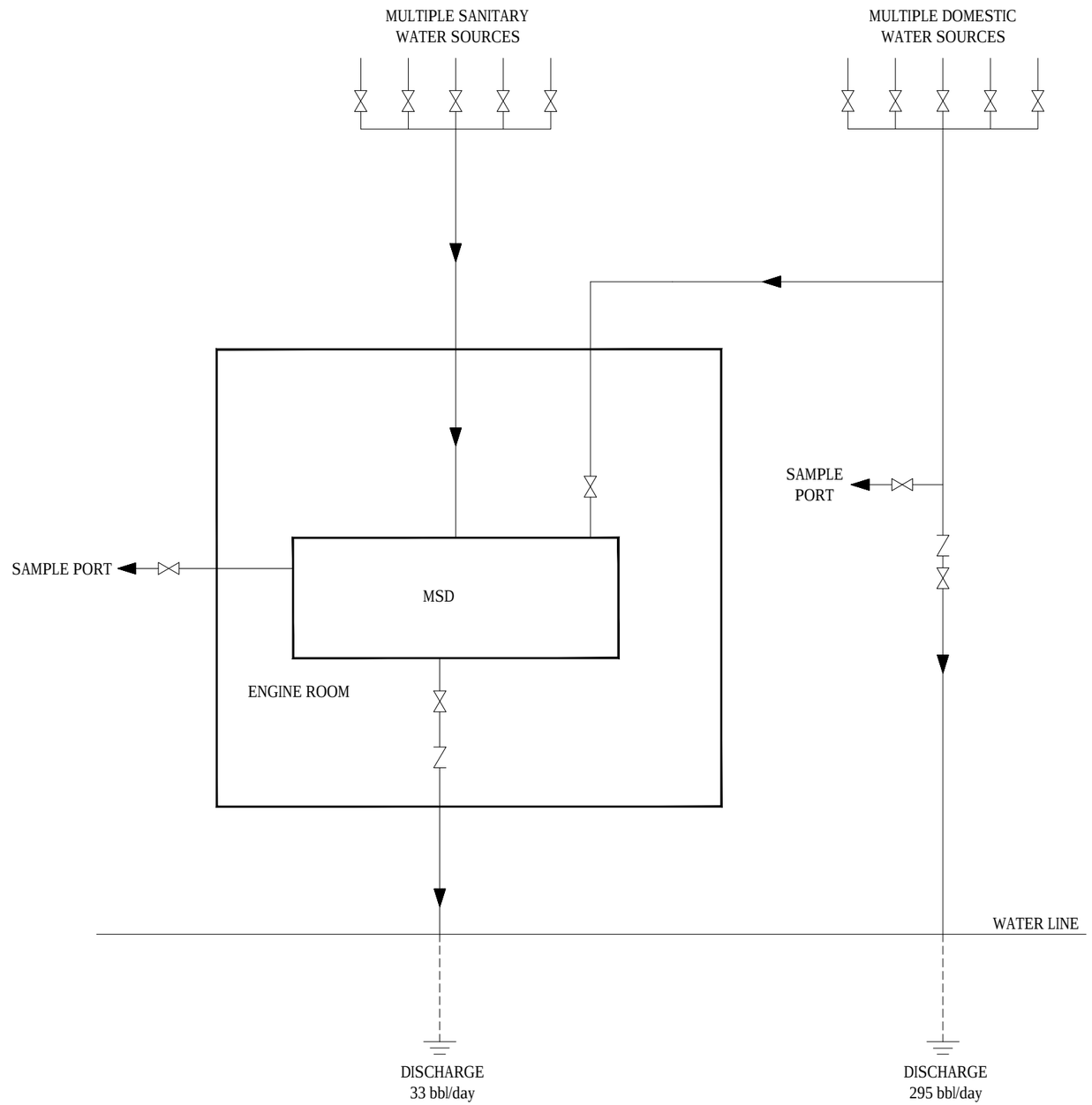

SANITARY AND DOMESTIC DISCHAGE

Noble Discoverer

LEGEND

Stop Valve

Swing Check Valve

DESIGNER		DATE	CLIENT APPROVALS	DATE
PROJ. ENG.	P. NELSON			
PROJ. MGR.	B. BROOKS			
A.F. PROJ. MGR.				
DRAFTER	S. JOHNSON	04-14-15		
CHECKED			ISSUED FOR	DATE

NO.	DATE	DRAFTER	REVISION

MI SWACO
A Schlumberger Company

Sanitary and Domestic Waste Water System
D003 / D004 - Noble Discoverer

DATE	DWG. NO.	REV. NO.
14 APR 2015	2015_Discoverer_Discharge-02.dwg	0
SCALE N.T.S.	W.O. NO. 13994.064.003	SHT. 1 OF 1

Apr 16, 2015 - 4:33pm
J:\MMSC\Projects\Commercial\Chevron\Gulf\BB 996070\005\2015_Discoverer_Discharge-02.dwg

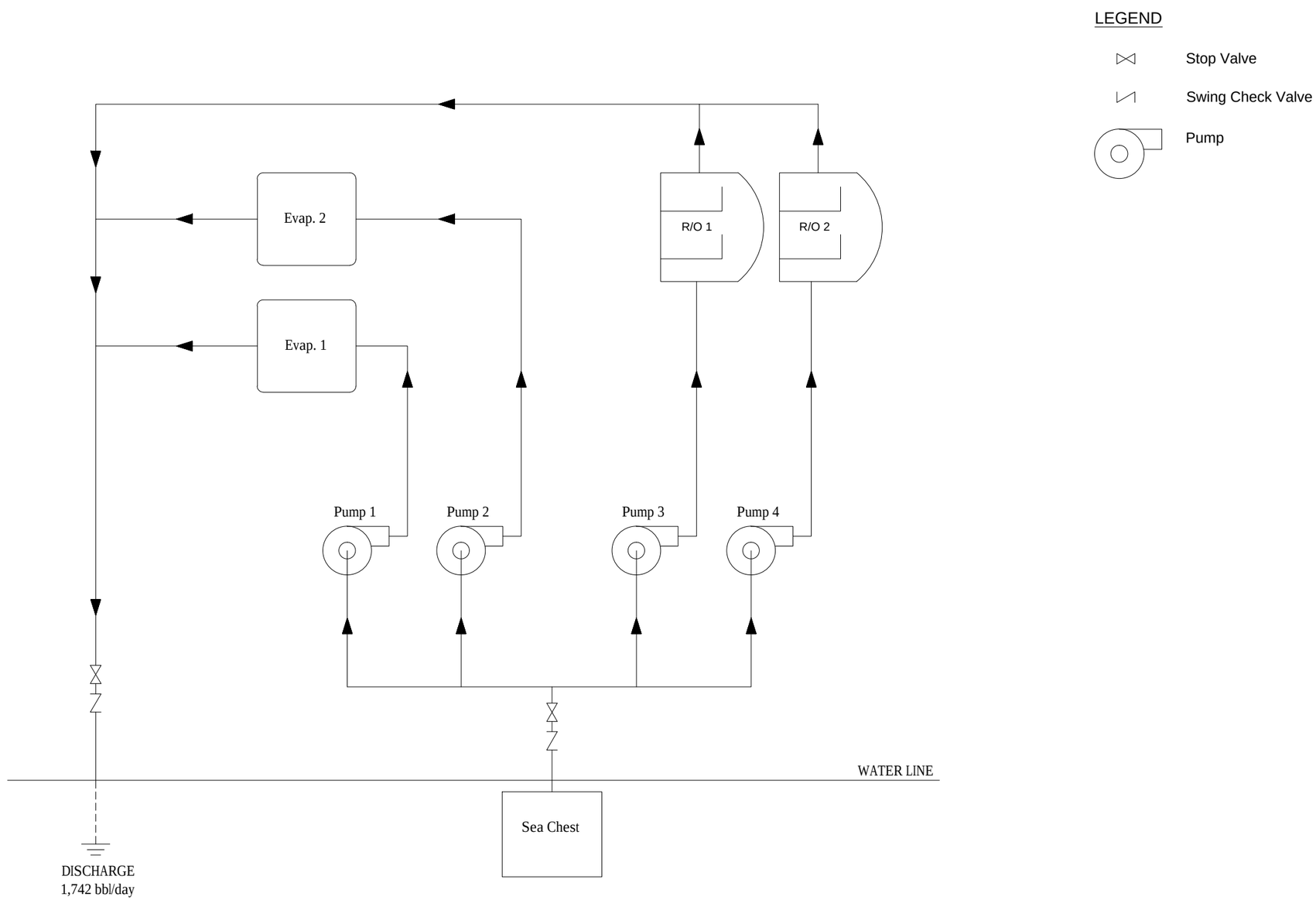

DESALINIZATION AND EVAPORATOR DISCHARGE
Noble Discoverer

DESIGNER		DATE	CLIENT APPROVALS	DATE
PROJ. ENG.	P. NELSON			
PROJ. MGR.	B. BROOKS			
A.F. PROJ. MGR.				
DRAFTER	S. JOHNSON	04-14-15		
CHECKED			ISSUED FOR	DATE

NO.	DATE	DRAFTER	REVISION

MI SWACO
A Schlumberger Company

Desalinization and Evaporator Discharge
D005 - Noble Discoverer

DATE	DWG. NO.	REV. NO.
14 APR 2015	2015_Discoverer_Discharge-02.dwg	0
SCALE: N.T.S.	W.O. NO.: 13994.064.003	SHT. 1 OF 1

Apr 16, 2015 - 8:05pm
V:\PROJECTS\Noble-Discoverer\Chukchi_Sea\IA 996320\06\2015_Discoverer_Discharge-02.dwg

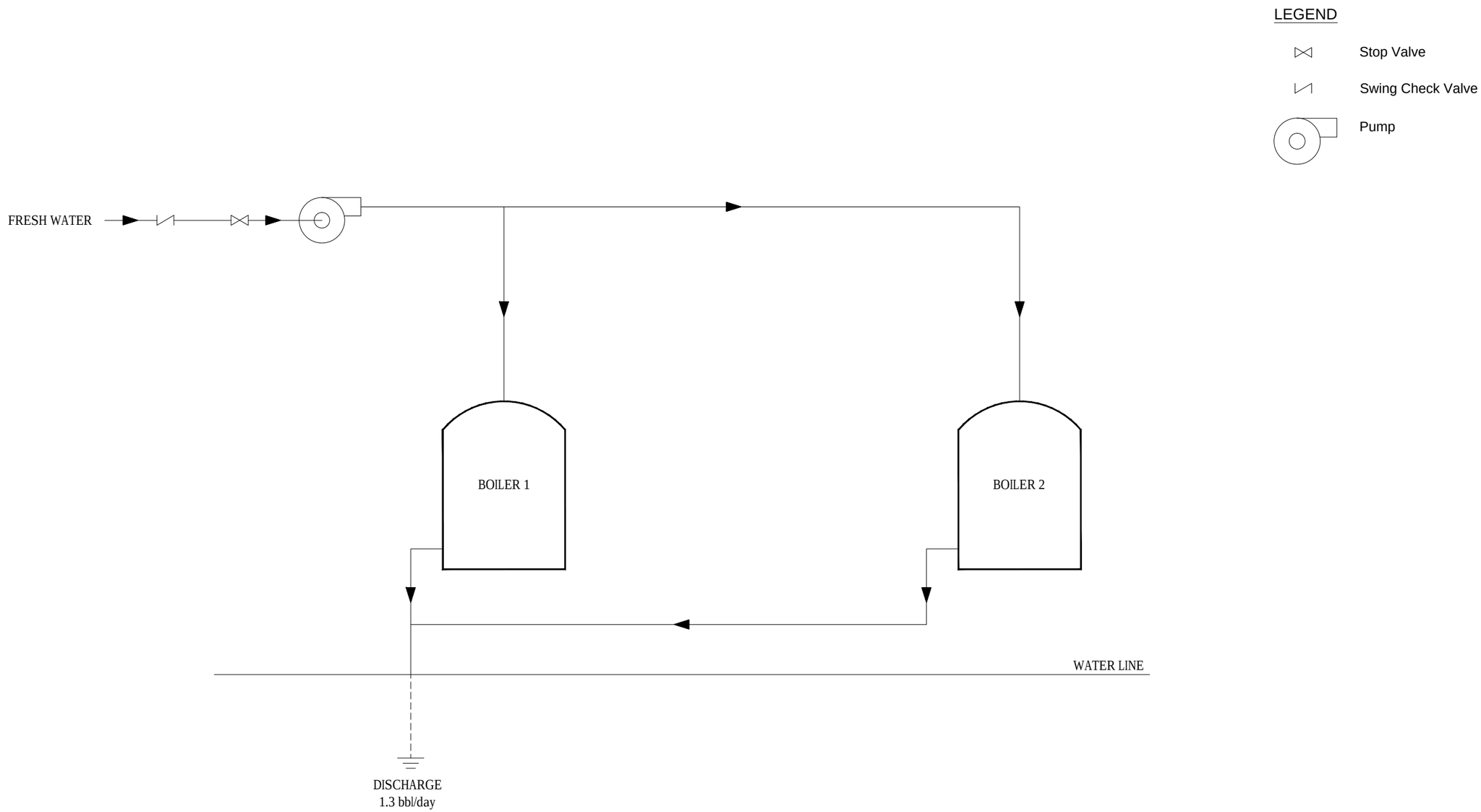

BOILER WATER DISCHARGE
Noble Discoverer

DESIGNER		DATE	CLIENT APPROVALS	DATE
PROJ. ENG.	P. NELSON			
PROJ. MGR.	B. BROOKS			
A.F. PROJ. MGR.				
DRAFTER	S. JOHNSON	04-14-15		
CHECKED			ISSUED FOR	DATE

NO.	DATE	DRAFTER	REVISION

MI SWACO
A Schlumberger Company

Boiler Water Discharge
D007 - Noble Discoverer

DATE	DWG. NO.	REV. NO.
14 APR 2015	2015_Discoverer_Discharge-02.dwg	0
SCALE N.T.S.	W.O. NO. 13994.064.003	SHT. 1 OF 1

Apr 16, 2015 - 4:06pm
G:\PROJECTS\AMERICAS\Noble\Discoverer\D\Dwg\D-Series\2015_Discoverer_Discharge-02.dwg

LEGEND

Glove Stop Valve

Swing Check Valve

Pump

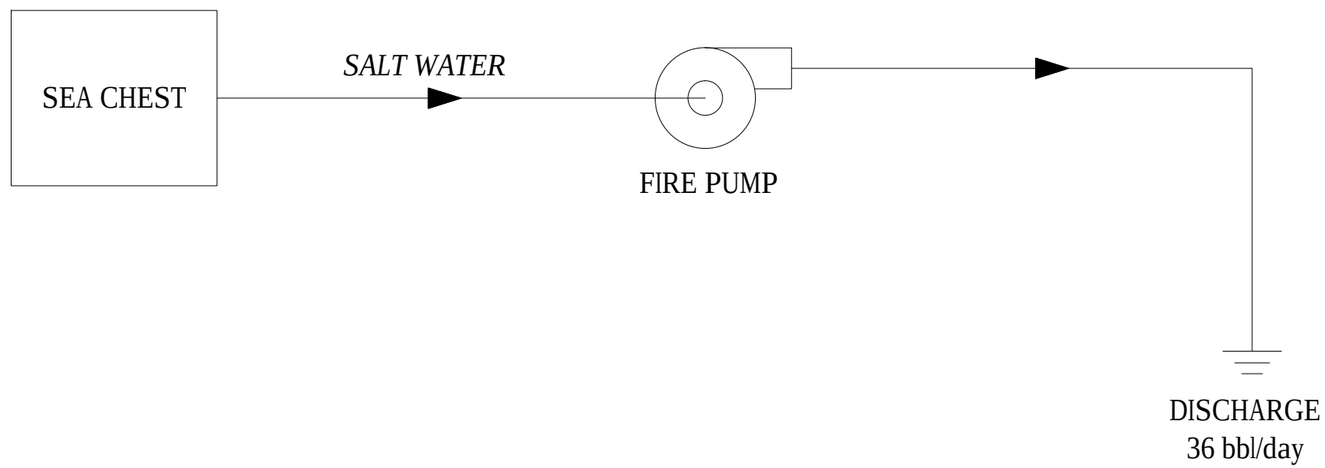

FIRE TEST WATER DISCHARGE

Noble Discoverer

DESIGNER		DATE	CLIENT APPROVALS	DATE
PROJ. ENG.	P. NELSON			
PROJ. MGR.	B. BROOKS			
A.F. PROJ. MGR.				
DRAFTER	S. JOHNSON	04-14-15		
CHECKED			ISSUED FOR	DATE

NO.	DATE	DRAFTER	REVISION

MI SWACO
A Schlumberger Company

Fire Test Water Discharge
D008 - Noble Discoverer

DATE	DWG. NO.	REV. NO.
14 APR 2015	2015_Discoverer_Discharge-02.dwg	0
SCALE N.T.S.	W.O. NO. 13994.064.003	SHT. 1 OF 1

Apr 16, 2015 - 11:06am
J:\13994064\Drawings\Discovered\Discharge\Fire Test Water Discharge\2015_Discoverer_Discharge-02.dwg

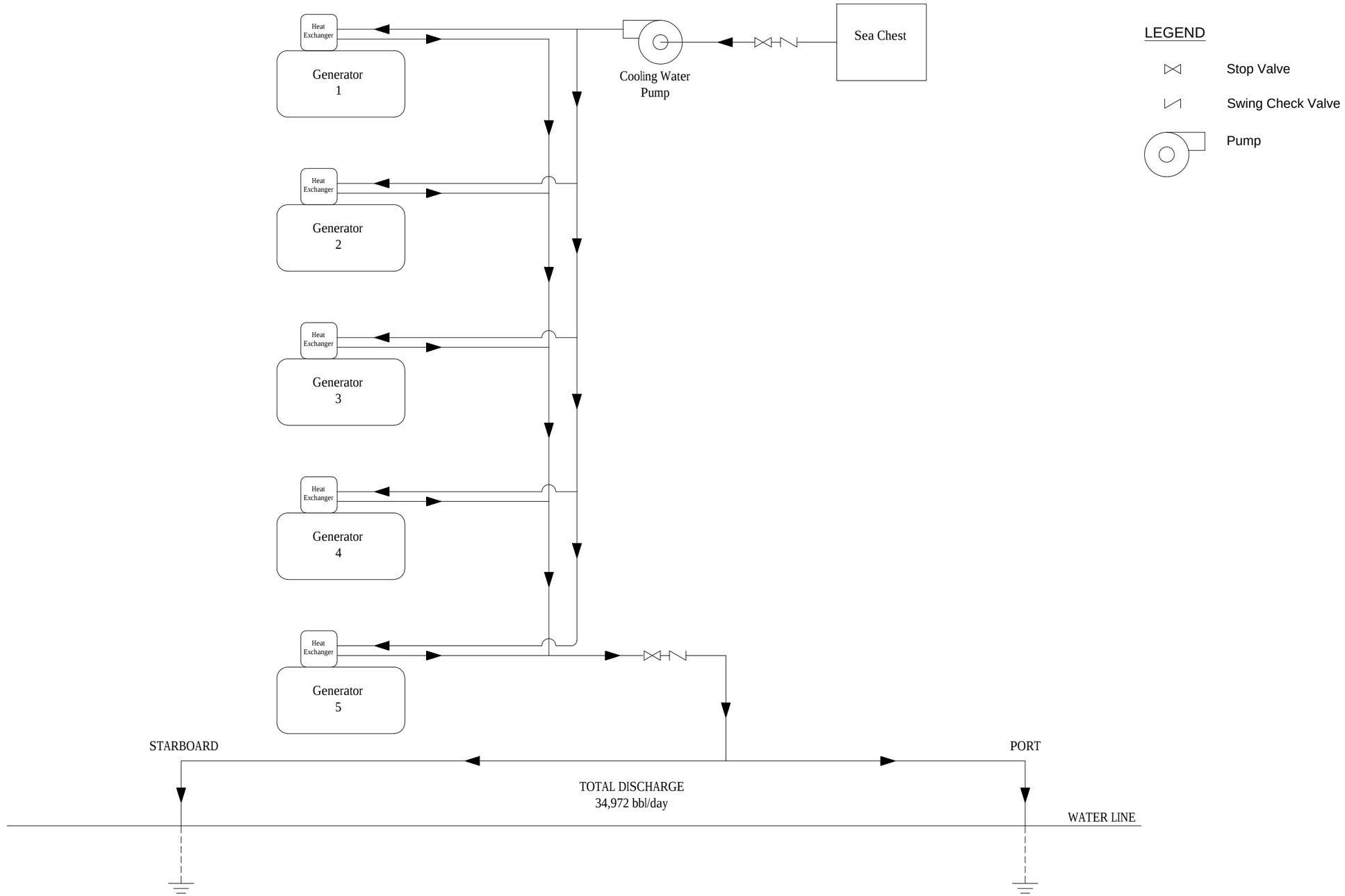

NON-CONTACT COOLING WATER DISCHARGE
Noble Discoverer

DESIGNER	DATE	CLIENT APPROVALS	DATE
PROJ. ENG. P. NELSON			
PROJ. MGR. B. BROOKS			
A.F. PROJ. MGR.			
DRAFTER S. JOHNSON	04-14-15		
CHECKED		ISSUED FOR	DATE

NO.	DATE	DRAFTER	REVISION

MI SWACO
A Schlumberger Company

Non-Contact Cooling Water
D009 - Noble Discoverer

DATE	DWG. NO.	REV. NO.
14 APR 2015	2015_Discoverer_Discharge-02.dwg	0
SCALE N.T.S.	W.O. NO. 13994.064.003	SHT. 1 OF 1

Apr 16, 2015 - 5:06pm
U:\PROJECTS\MAERSK-Commercial\Chukchi_Sea\IA WAIVER\2015\2015_Discoverer_Discharge-02.dwg

LEGEND

Stop Valve

Swing Check Valve

Pump

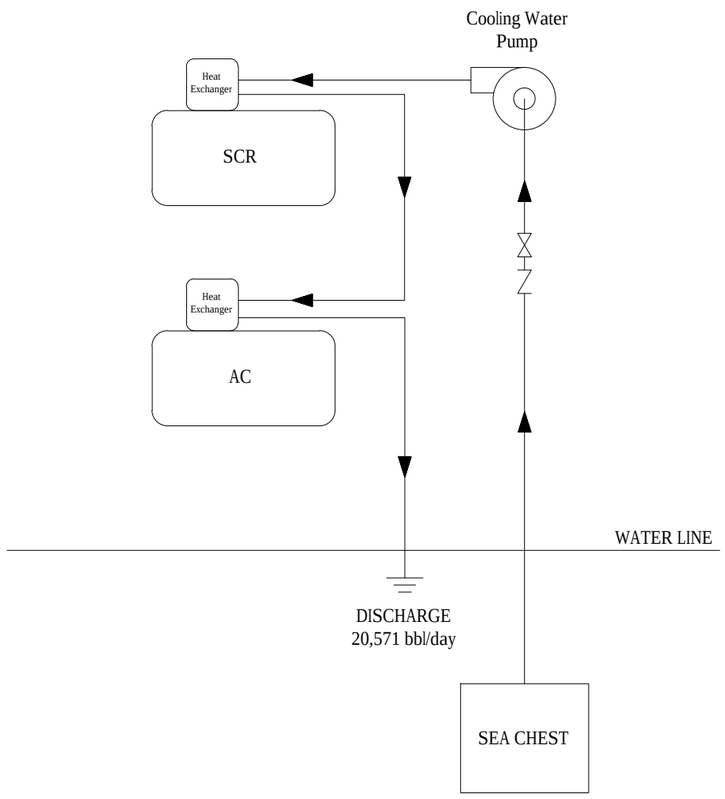

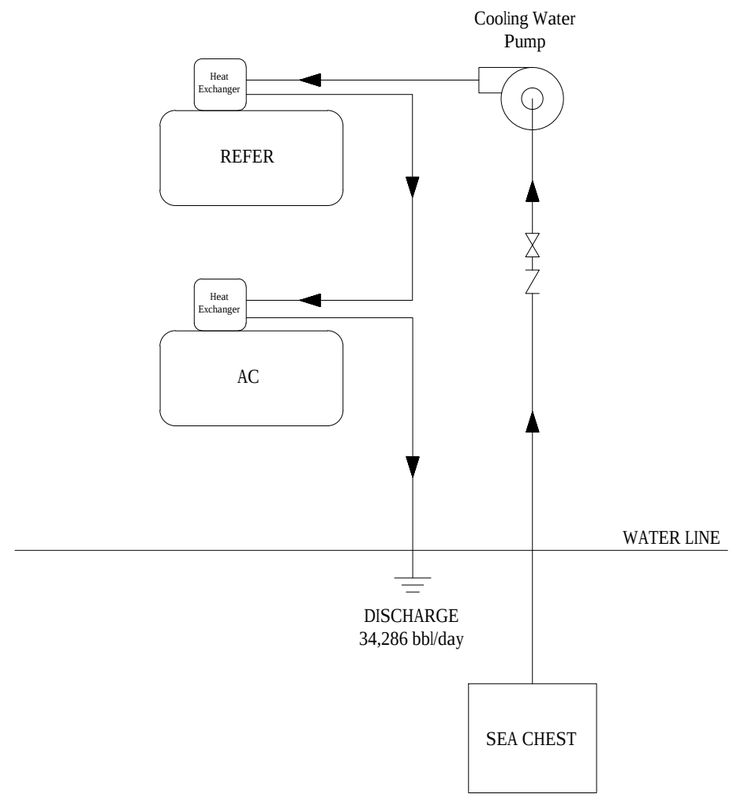

NON-CONTACT COOLING WATER DISCHARGE

Noble Discoverer

DESIGNER		DATE	CLIENT APPROVALS	DATE
PROJ. ENG.	P. NELSON			
PROJ. MGR.	B. BROOKS			
A.F. PROJ. MGR.				
DRAFTER	S. JOHNSON	04-14-15		
CHECKED			ISSUED FOR	DATE

NO.	DATE	DRAFTER	REVISION

MI SWACO
A Schlumberger Company

Non-Contact Cooling Water Discharge
D009 - Noble Discoverer

DATE	DWG. NO.	REV. NO.
14 APR 2015	2015_Discoverer_Discharge-02.dwg	0
SCALE N.T.S.	W.O. NO. 13994.064.003	SHT. 1 OF 1

Apr 16, 2015 - 7:06pm
J:\MMSC\Projects\Discoverer\Drawings\Cooling Water\D009 CWD\2015_Discoverer_Discharge-02.dwg

LEGEND

Stop Valve

Swing Check Valve

Pump

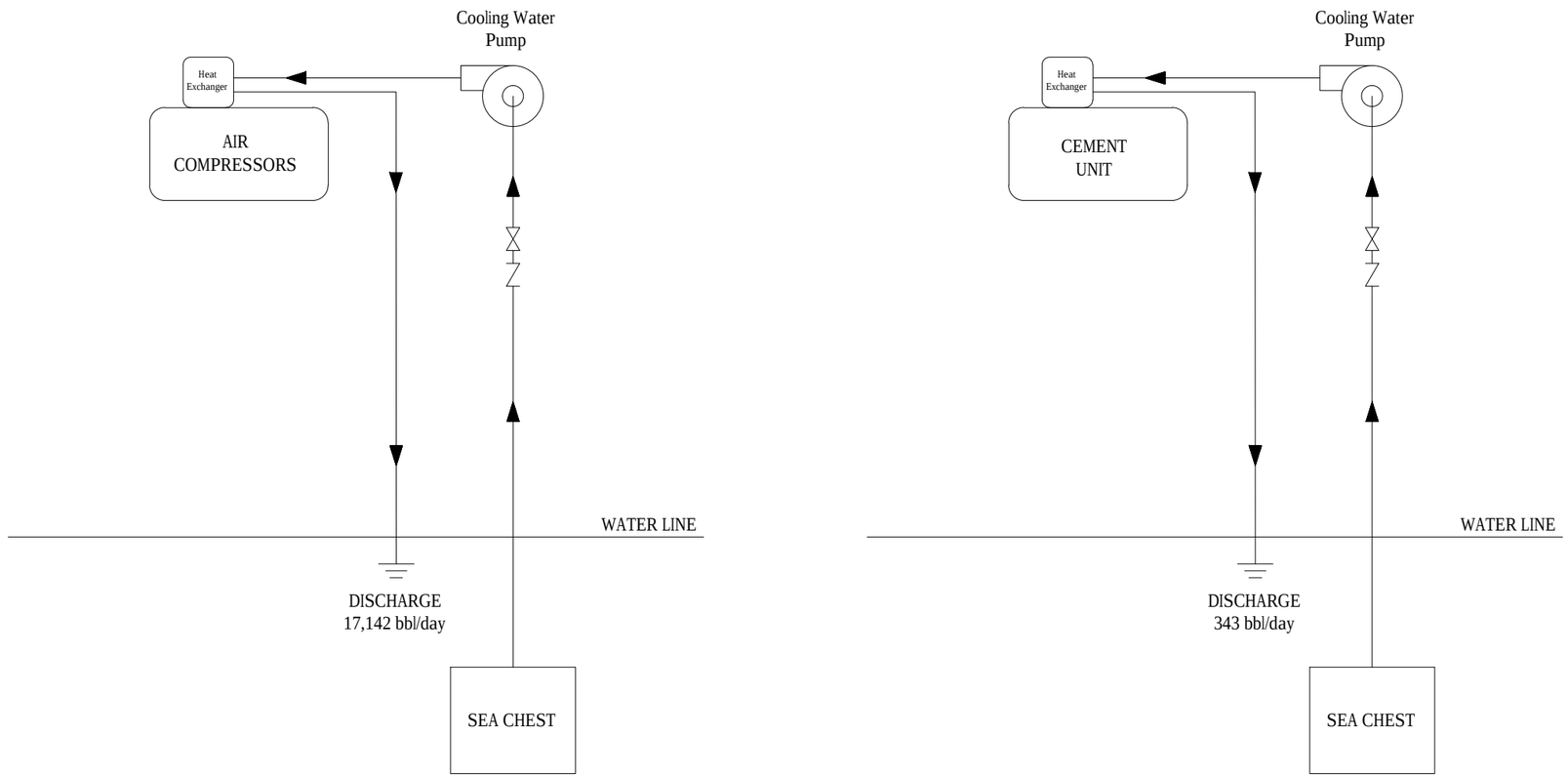

NON-CONTACT COOLING WATER DISCHARGE

Noble Discoverer

DESIGNER		DATE	CLIENT APPROVALS	DATE
PROJ. ENG.	P. NELSON			
PROJ. MGR.	B. BROOKS			
A.F. PROJ. MGR.				
DRAFTER	S. JOHNSON	04-14-15		
CHECKED			ISSUED FOR	DATE

NO.	DATE	DRAFTER	REVISION

MI SWACO
A Schlumberger Company

Non-Contact Cooling Water Discharge
D009 - Noble Discoverer

DATE	DWG. NO.	REV. NO.
14 APR 2015	2015_Discoverer_Discharge-02.dwg	0
SCALE N.T.S.	W.O. NO. 13994.064.003	SHT. 1 OF 1

Apr 16, 2015 - 7:15pm
G:\PROJECTS\Saudi Aramco\Cleanup\Cleanup_Sea\M SWACO\CAD\2015_Discover_Discharge-02.dwg

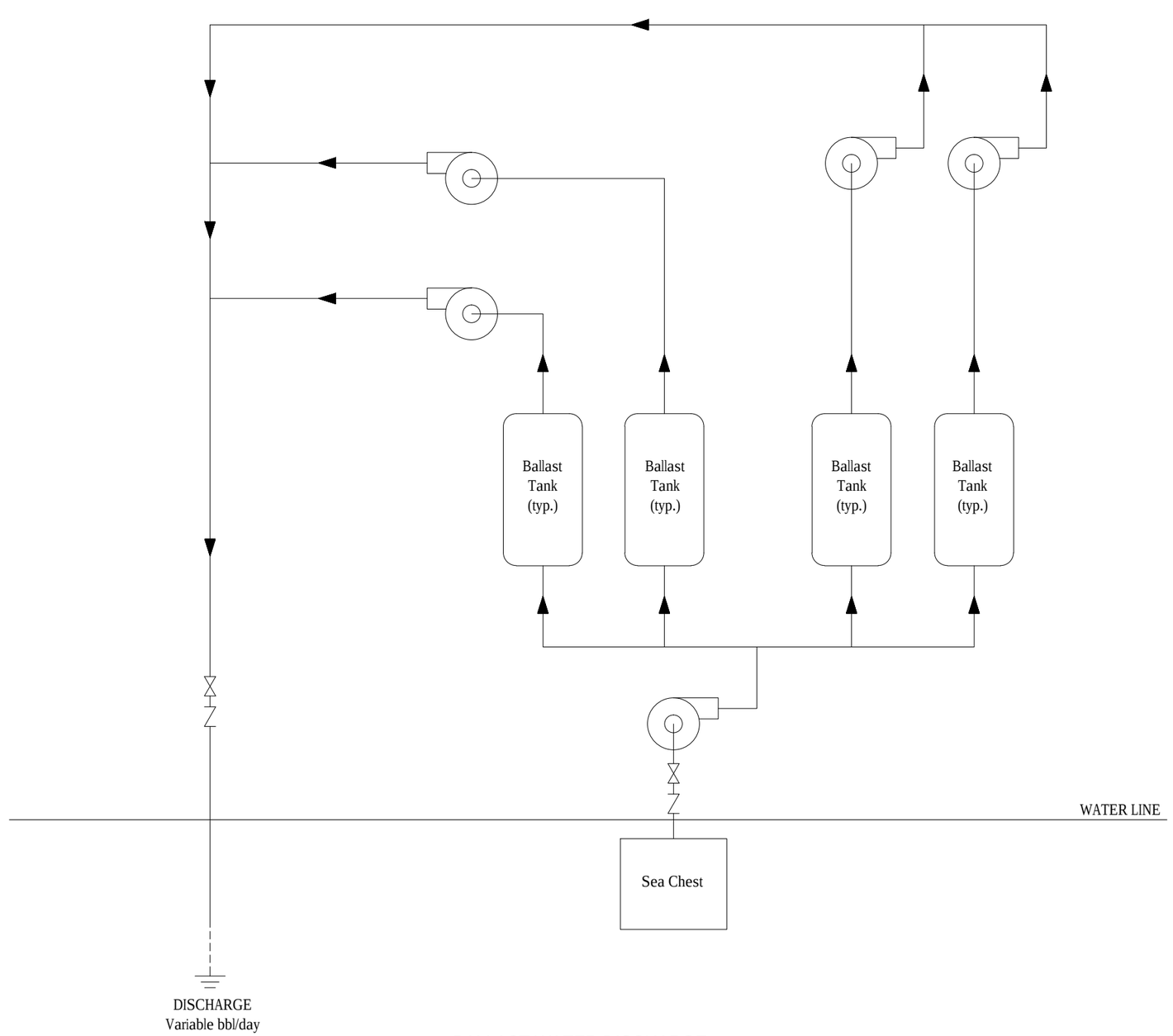

LEGEND

Stop Valve

Swing Check Valve

Pump

BALLAST WATER DISCHARGE
Noble Discoverer

DESIGNER		DATE	CLIENT APPROVALS	DATE
PROJ. ENG.	P. NELSON			
PROJ. MGR.	B. BROOKS			
A.F. PROJ. MGR.				
DRAFTER	S. JOHNSON	04-14-15		
CHECKED			ISSUED FOR	DATE

NO.	DATE	DRAFTER	REVISION

MI SWACO
A Schlumberger Company

Ballast Water Discharge
D010 - Noble Discoverer

DATE	DWG. NO.	REV. NO.
14 APR 2015	2015_Discoverer_Discharge-02.dwg	0
SCALE N.T.S.	W.O. NO. 13994.064.003	SHT. 1 OF 1

Apr 16, 2015 - 8:14pm
U:\PROJECTS\Noble Discoverer\Outside Jobs\M MWCO\JOB\2015_Discoverer_Discharge-02.dwg

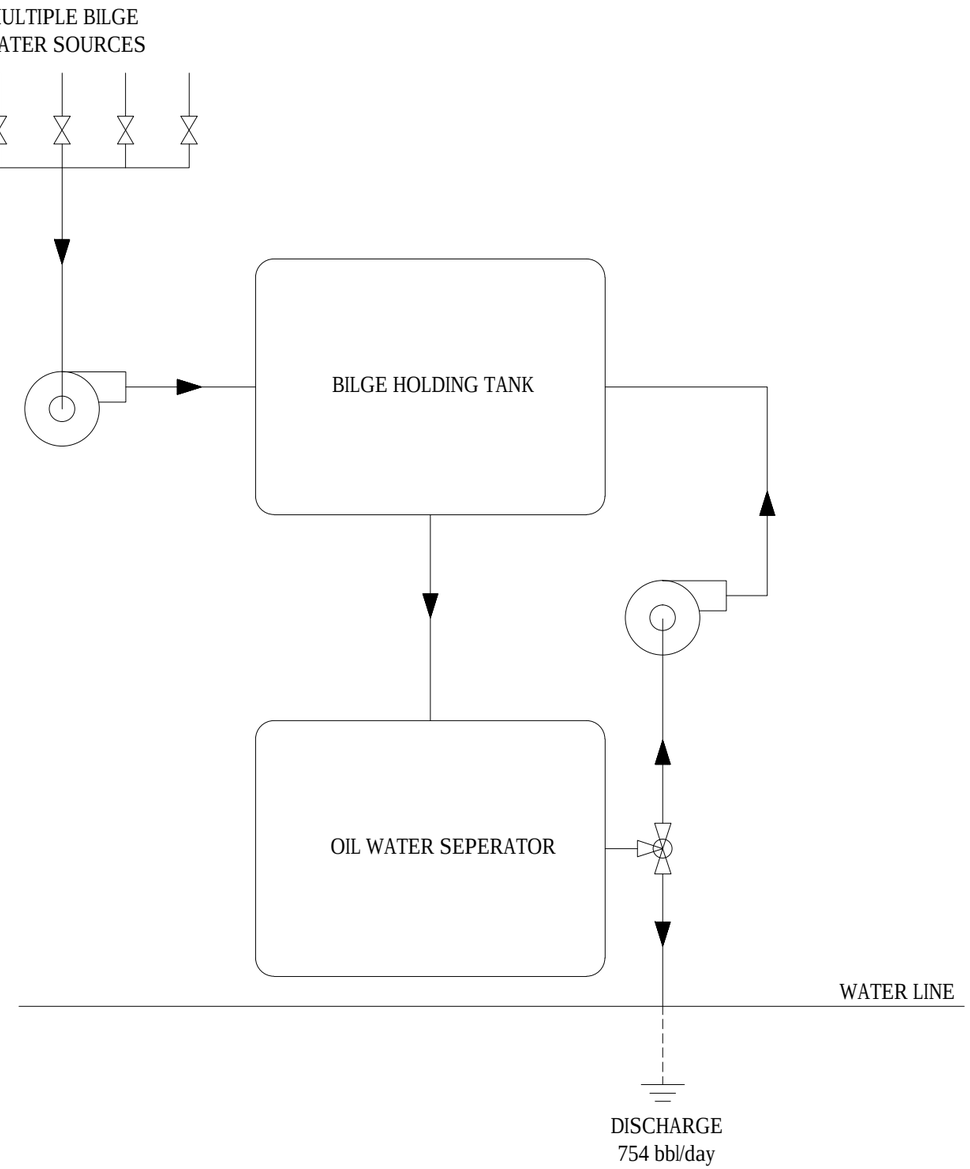

LEGEND

Stop Valve

3-Way Valve

Pump

BILGE WATER DISCHARGE
Noble Discoverer

DESIGNER		DATE	CLIENT APPROVALS	DATE
PROJ. ENG.	P. NELSON			
PROJ. MGR.	B. BROOKS			
A.F. PROJ. MGR.				
DRAFTER	S. JOHNSON	04-14-15		
CHECKED			ISSUED FOR	DATE

NO.	DATE	DRAFTER	REVISION

MI SWACO
A Schlumberger Company

Bilge Water Discharge
D011 - Noble Discoverer

DATE	DWG. NO.	REV. NO.
14 APR 2015	2015_Discoverer_Discharge-02.dwg	0
SCALE N.T.S.	W.O. NO. 13994.064.003	SHT. 1 OF 1

Apr 16, 2015 - 9:05am
V:\PROJECTS\Mobile-Commercial\Chukchi_Sea\M MWCO\MCO15_Discoverer_Discharge-02.dwg

LEGEND

Stop Valve

Swing Check Valve

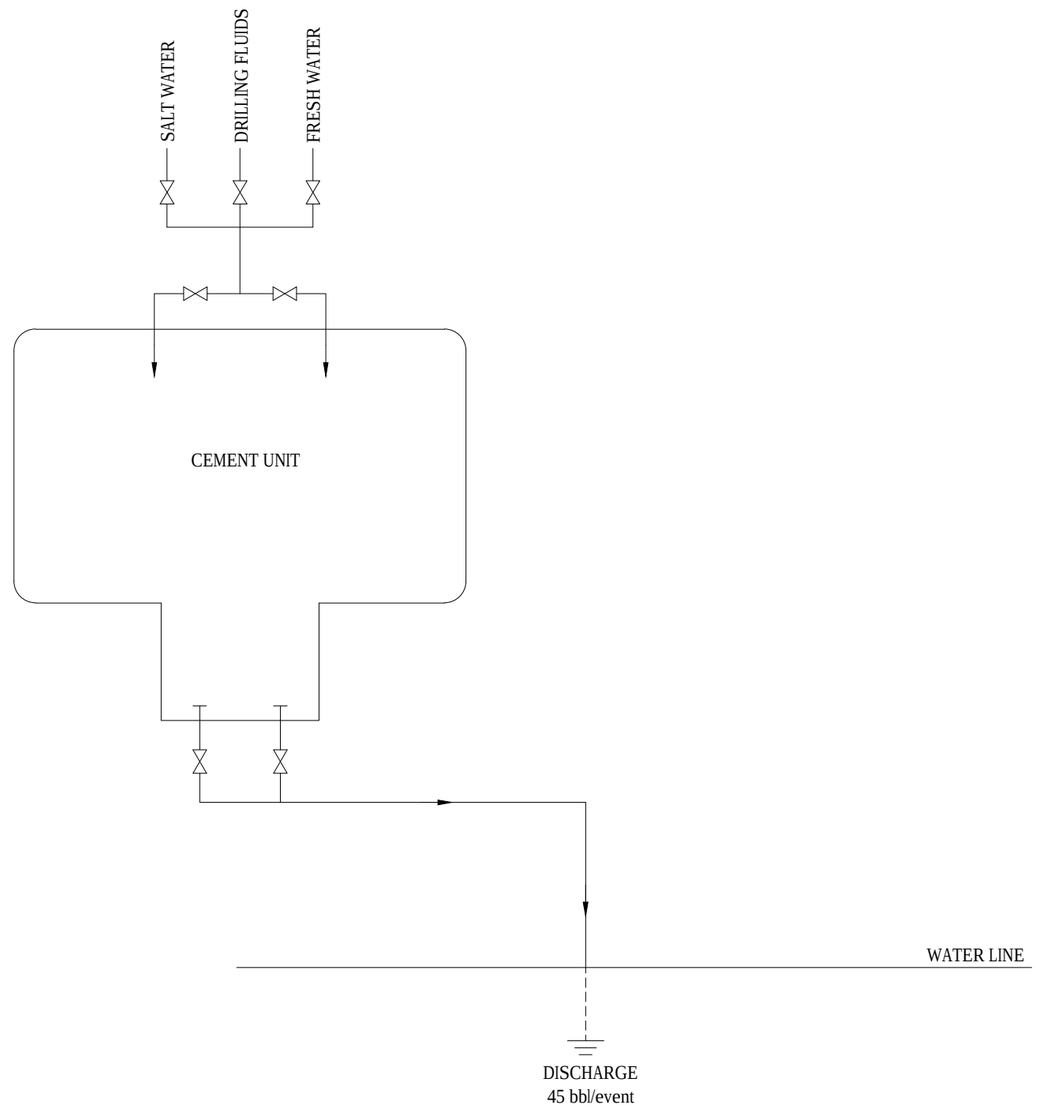

CEMENT SLURRY DISCHARGE

Noble Discoverer

DESIGNER		DATE	CLIENT APPROVALS	DATE
PROJ. ENG.	P. NELSON			
PROJ. MGR.	B. BROOKS			
A.F. PROJ. MGR.				
DRAFTER	S. JOHNSON	04-14-15		
CHECKED			ISSUED FOR	DATE

NO.	DATE	DRAFTER	REVISION

MI SWACO
A Schlumberger Company

Cement Slurry Discharge
D012 - Noble Discoverer

DATE	DWG. NO.	REV. NO.
14 APR 2015	2015_Discoverer_Discharge-02.dwg	0
SCALE N.T.S.	W.O. NO. 13994.064.003	SHT. 1 OF 1

Apr 16, 2015 - 4:39pm
J:\WMS\DTS\Houston\Commercial\Drawings\ Sub\ 13994\DTS\2015_Discoverer_Discharge-02.dwg