MILDOS-AREA Model / Air Dispersion Modeling

November 2013

MILDOS-AREA Model

- Estimates the radiological impacts of airborne emissions from uranium mining and milling facilities or any other large-area source involving emissions of radioisotopes of the uranium-238 series.
- Incorporates site-specific meteorological parameters.
- Includes mechanisms of dry deposition of particulates, resuspension, radioactive decay and progeny ingrowth, and plume reflection.

MILDOS-AREA Output

- Impacts to humans through pathways such as inhalation, external exposure, and ingestion are estimated based on calculated annual average air concentrations of nuclides.
- A Gaussian plume-dispersion model is used to compute concentrations of radioactive materials from fixed-point sources.

Elements of Air Pollution Models

- Contaminant emission rate
- Characteristics of the emission source
- Local topography
- Meteorology of the area
- Ambient or background concentrations

Required Modeling Data Input

- Source and emissions characteristics
- Meteorological data (preferably at the source)
- Terrain and local features data

Four main types of sources

- Point source – discharges from a small opening such as a stack or vent.
- Area source – a source with a large surface area (landfill, contaminated site, liquid surfaces such as pond, tank, lagoon).
- Line source – long narrow source (ex. roadway).
- Volume source – emissions from a refinery or building.

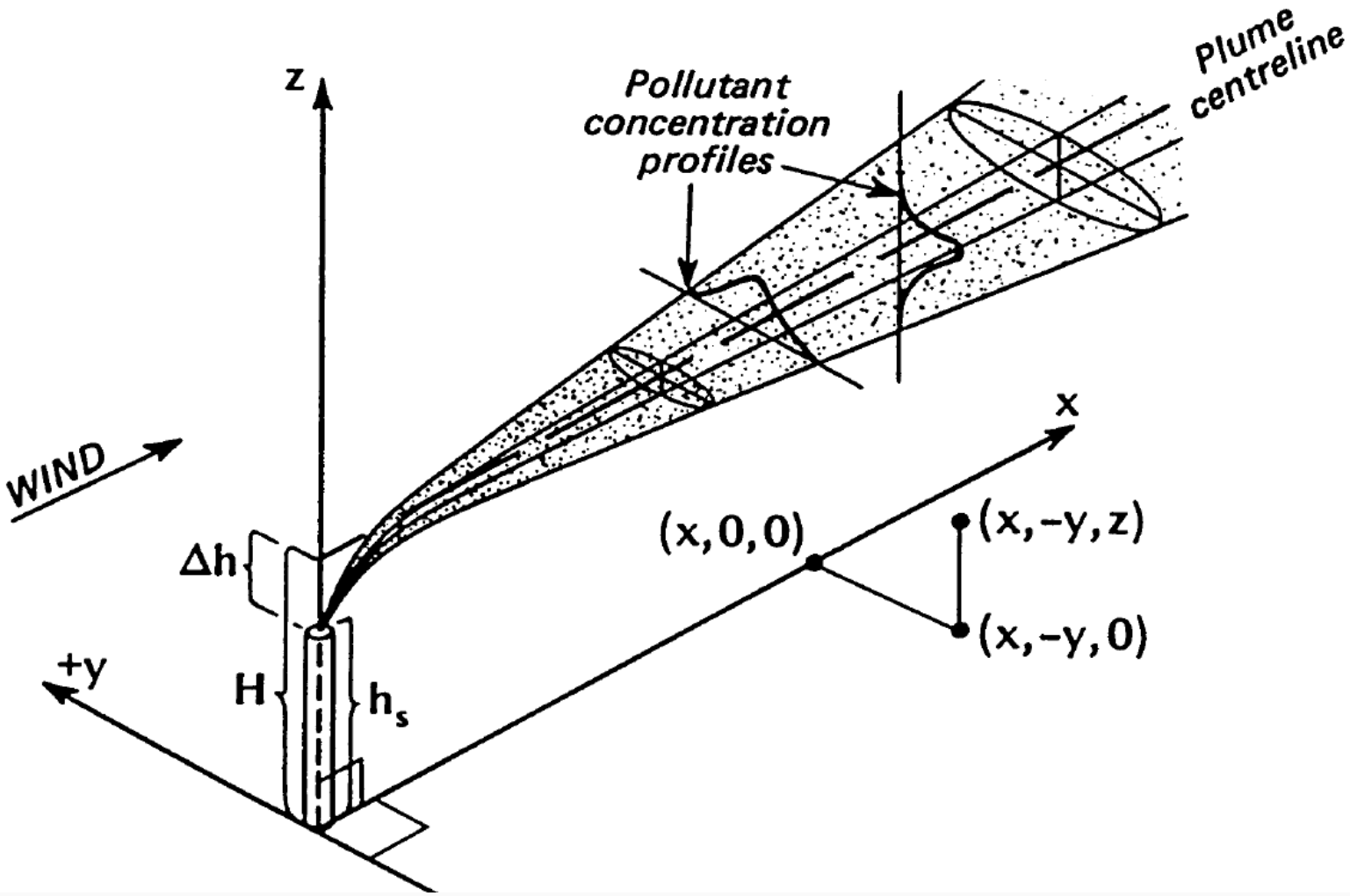
z
Pollutant concentration profiles
Plume centreline
x
WIND
Δh
(x,0,0)
(x,-y,z)
(x,-y,0)
+y
H
h_s

Area source

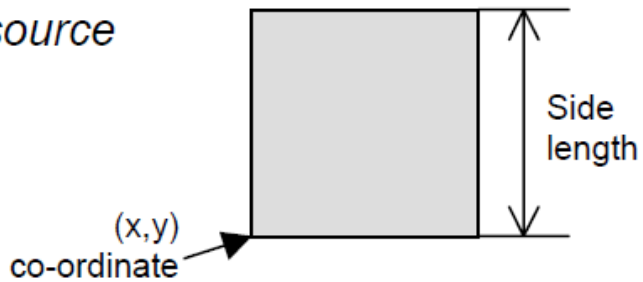

Square area source

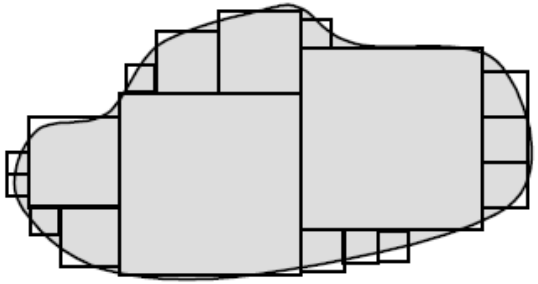

Irregular area source simulated as collection of square area sources

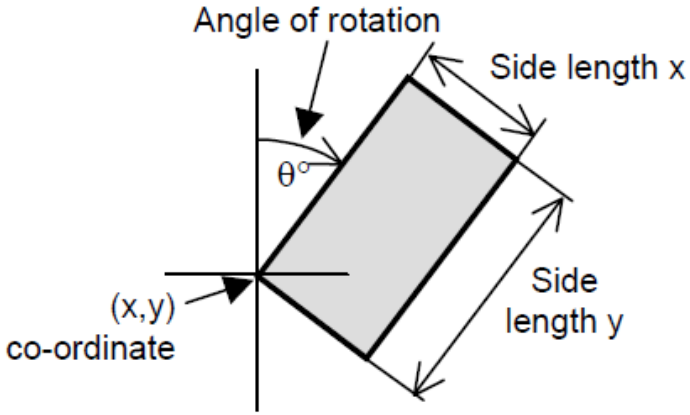

Rectangular area source

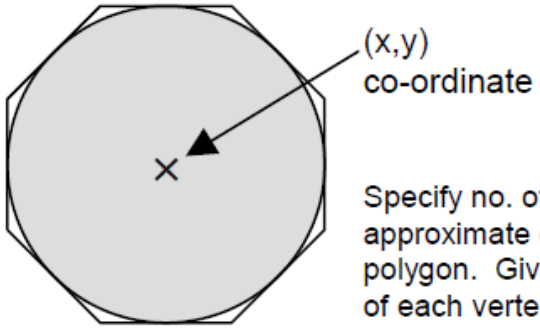

Specify no. of vertices to approximate circle as a polygon. Give coordinates of each vertex.

Circular area source

Uses for Modeling

- Assess compliance of emissions with air quality guidelines, criteria , and standards
- Planning new facilities
- Designing ambient air monitoring networks
- Saving cost and time over monitoring
- Evaluating mitigation strategies
- Assessing risks from rare events (accidents)

Gaussian-plume Equation

- Assumes “steady-state” conditions over a specific time period (usually one hour).
- Meteorological conditions assumed to remain constant from source to receptor.
- Emissions and meteorological conditions can vary from hour to hour.

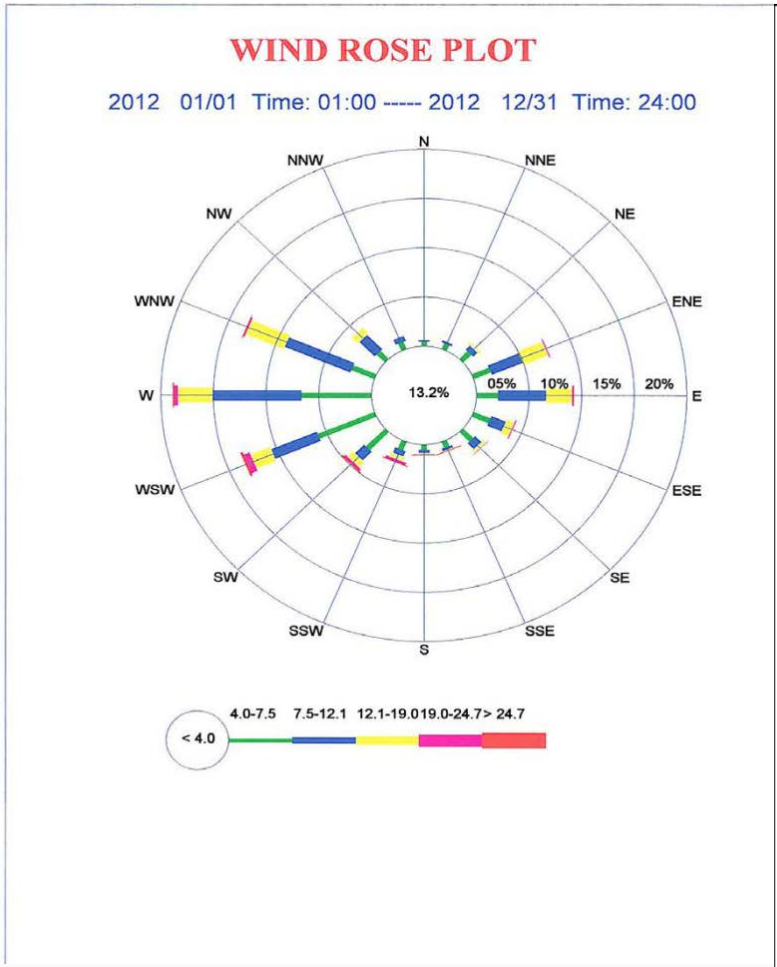
WIND ROSE PLOT
2012 01/01 Time: 01:00 ----- 2012 12/31 Time: 24:00
N
NNE
NE
ENE
E
ESE
SE
SSE
S
SSW
SW
WSW
W
WNW
NW
NNW
13.2%
05%
10%
15%
20%
< 4.0
4.0-7.5
7.5-12.1
12.1-19.0
19.0-24.7
> 24.7

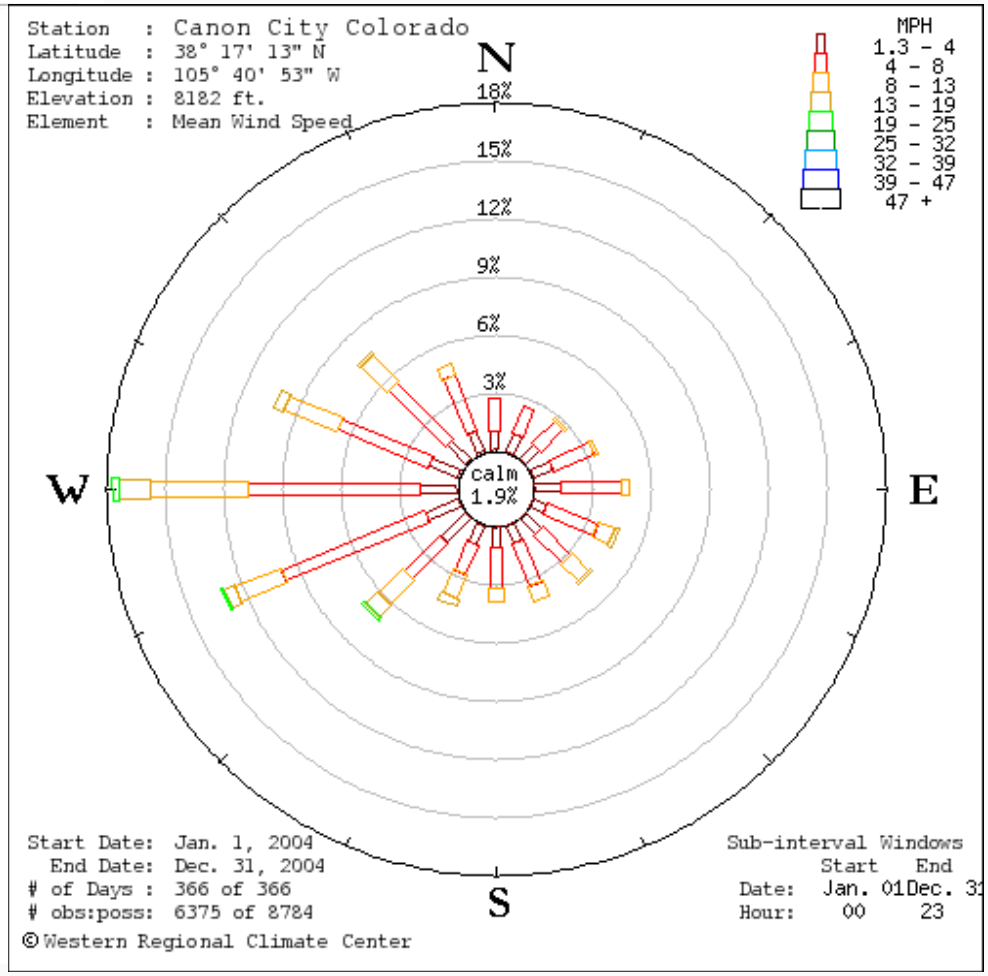
Station : Canon City Colorado
Latitude : 38° 17' 13" N
Longitude : 105° 40' 53" W
Elevation : 8182 ft.
Element : Mean Wind Speed
MPH
1.3 - 4
4 - 8
8 - 13
13 - 19
19 - 25
25 - 32
32 - 39
39 - 47
47 +
N
E
S
W
18%
15%
12%
9%
6%
3%
calm
1.9%
Start Date: Jan. 1, 2004
End Date: Dec. 31, 2004
# of Days : 366 of 366
obs:poss: 6375 of 8784
Sub-interval Windows
Start End
Date: Jan. 01 Dec. 31
Hour: 00 23
©Western Regional Climate Center

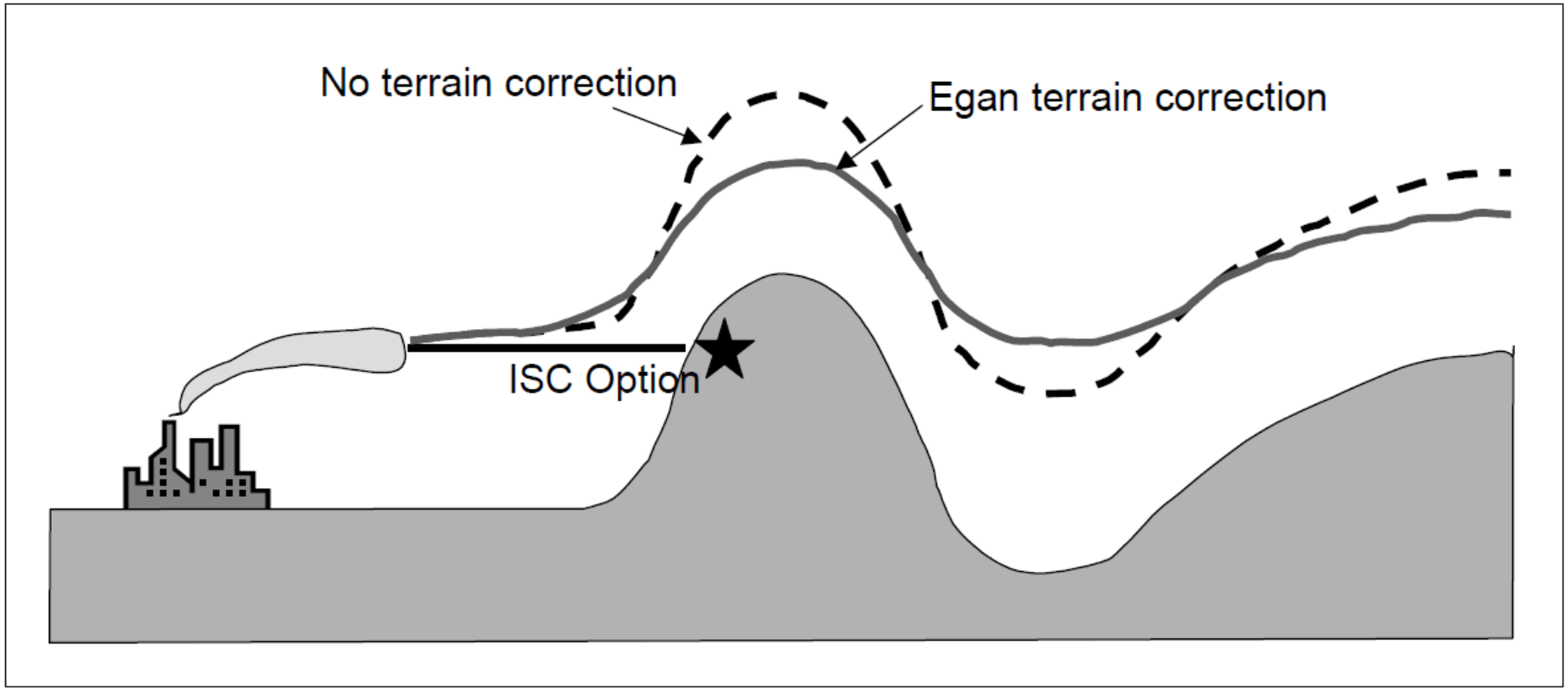
No terrain correction
Egan terrain correction
ISC Option

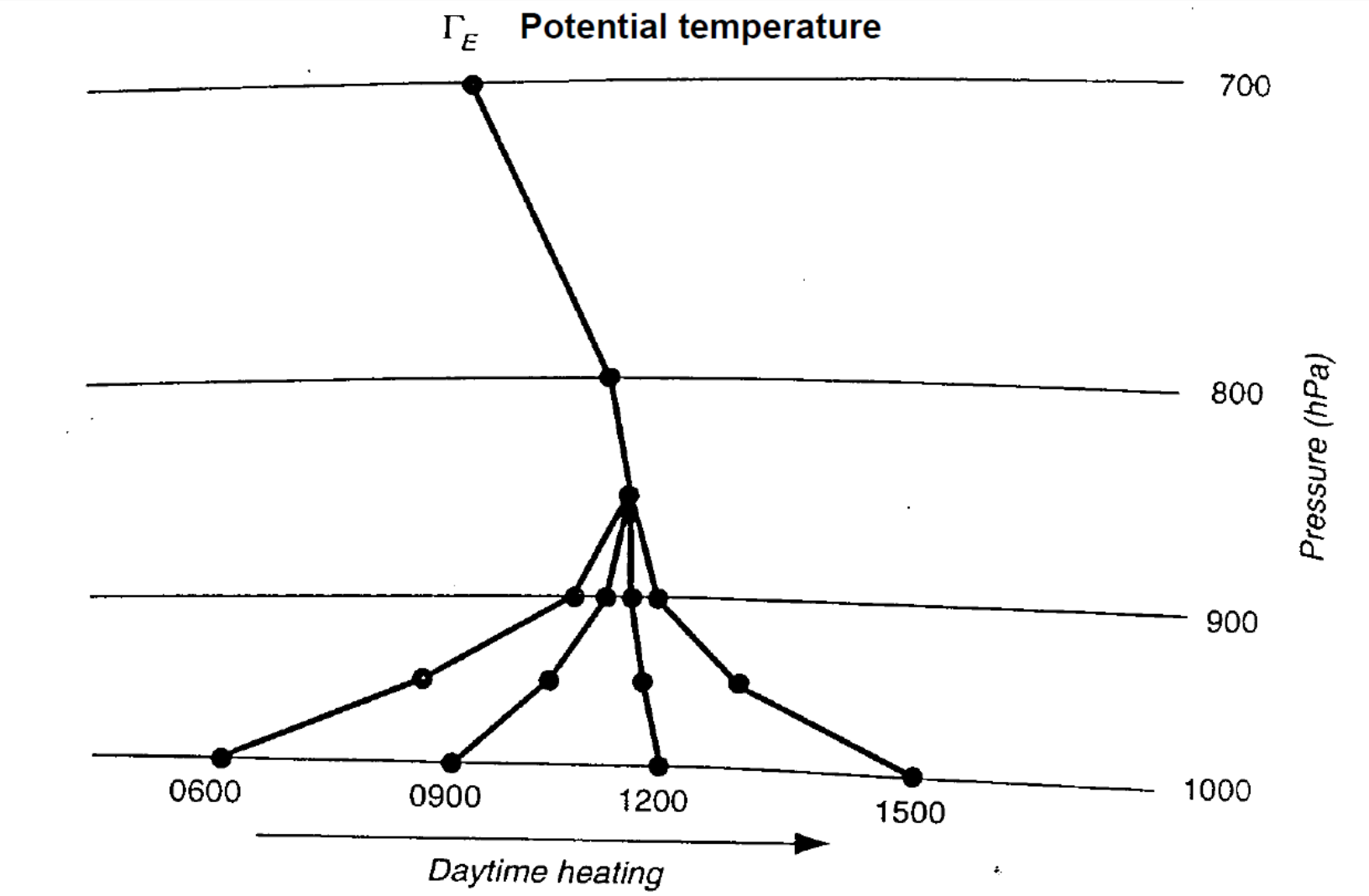
Γ_E Potential temperature
700
800
900
1000
Pressure (hPa)
0600
0900
1200
1500
Daytime heating

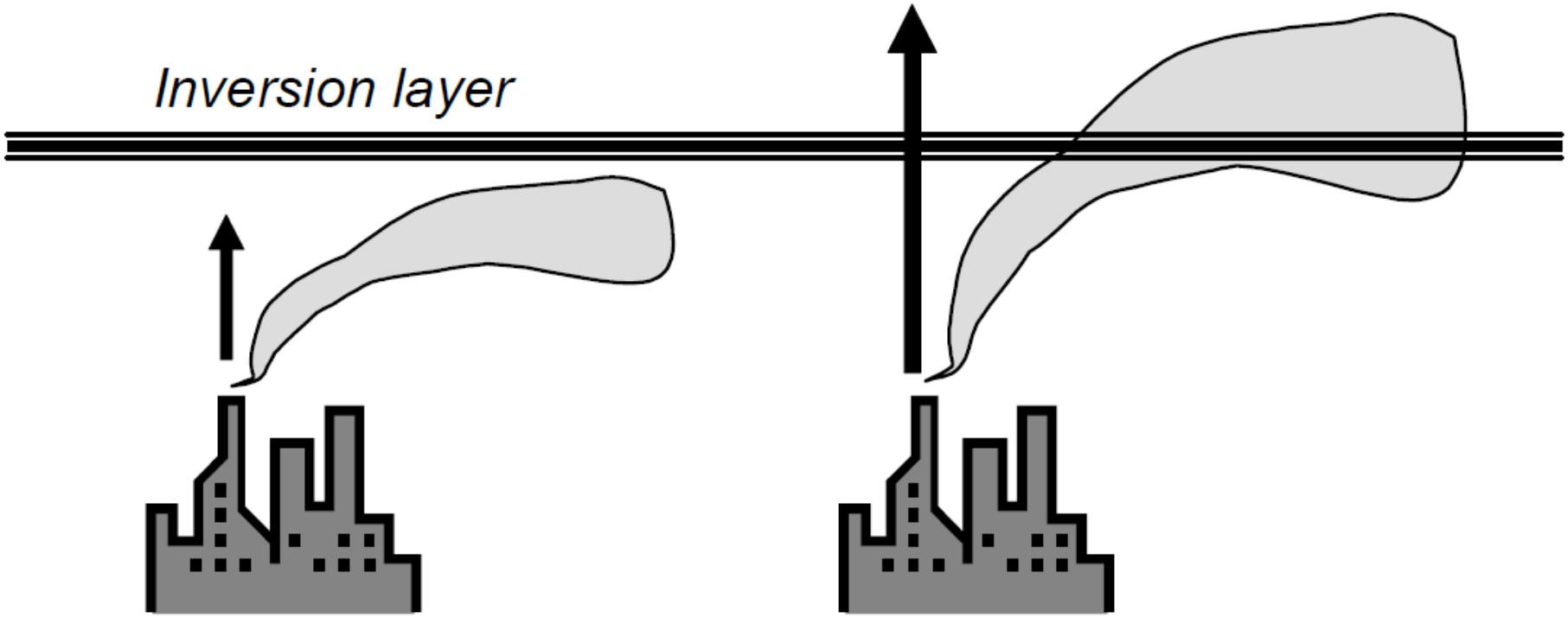

Low buoyancy plume; trapped below inversion layer

High buoyancy plume; inversion layer partially penetrated

Dispersion Models Limitations

- Even the most sophisticated atmospheric dispersion model cannot predict the precise location, magnitude and timing of ground-level concentrations with 100 percent accuracy.
- Most models have been through a thorough model evaluation process with results that are reasonably accurate, provided an appropriate model and input data are used.