LBX0~~0~~#1

REDACTED

United States Environmental Protection Agency
Region 4

OTIE
Oneida Total Integrated Enterprises

UNITED STATES ENVIRONMENTAL PROTECTION AGENCY

35TH AVENUE REMOVAL INVESTIGATION
BIRMINGHAM, ALABAMA
JEFF CROWLEY, ON-SCENE COORDINATOR

FIELD SAMPLING LOGBOOK

Book 1 **of** 1

Inclusive Dates: 2/4 – 2/6/13

List of Sampling Team in logbook:

Name	Initials	Organization/Duties
(b) (6)		BES, Team Leader
		OTIE

THIS PAGE LEFT INTENTIONALLY BLANK

Sampling Procedures and Methodology

Unless specified elsewhere in this logbook, all soil samples will be collected in accordance with the EPA Science and Ecosystem Division (SESD) Field Branches Quality System and Technical Procedures (FBQSTP) Soil Sampling (SESDPROC-300-R2) based on the following design.

The total number of 5-point composite surface soil samples (0-4 inches below ground surface) to be collected from each property will be based on the lot size as follows:

- For residential properties with a total parcel lot size equal to or less than (≤) 5,000 square feet - the front yard and back yards of each property. If the property has a substantial side yard (primarily corner lots), then one composite soil sample may also be collected from the side yard. Aliquots will be collected away from influences with drip lines and burn areas in a five dice configuration (each of the four corners and the center).
- For residential properties with a total parcel lot size greater than (>) 5,000 square feet and ≤ ¼-acre - the property should be divided into two roughly equal surface areas. If the property has a substantial side yard (primarily corner lots), then one composite soil sample may be collected from the side yard with the remainder of the property being divided into two roughly equal surface areas. Aliquots will be collected away from influences including drip lines and burn areas with reasonably equal spacing between aliquots.
- Residential properties over ¼-acre in parcel lot size will be divided into ¼-acre sections. When dividing any such property with a substantial side yard (primarily corner lots), one composite soil sample may be collected from the side yard. Aliquots will be collected away from influences including drip lines and burn areas in a five dice configuration, if possible, with reasonably equal spacing between aliquots.

Grab surface soil samples will be collected from apparent exposure pathways where active play sets are located.

Three-point composite surface soil samples will be collected from distinct vegetable gardens from each residential property.

Samples shall not be collected under paved areas or under stationary fixed structures.

Grab sediment samples will be collected in accordance with EPA SESD FBSTP Sediment Sampling (SESDPROC-200-R2) from any surface water drainage pathways located on individual properties, as directed by the OSC, and in and along the banks of the 34th Street North Ditch.

Each surface soil or sediment sample should be homogenized in a stainless steel bowl. One 8-ounce jar will be filled and the remaining sample material will be placed in zip-top bags for screening. Information identifying the location, sample, and date/time will be inscribed on each jar and zip-top bag.

All sample bags will be screened for metals in accordance with SESD FBQSTP Field XRF Measurement (SESDPROC-107-R2) using a Niton XRF. The sample will be dried before sieving or analysis is performed. Once the sample has dried, the sample will be divided into two subsamples; one subsample will be sieved through a #10 screen (2 mm) and the other will be left unsieved. Once separated into sieved and unsieved samples, the zip-top bag will be compressed by folding over the excess plastic and removing as much air and space from the sample as possible. The XRF will be placed directly on the exterior of the compressed sample in the plastic zip-top bag to measure metals concentrations. Following XRF screening, the unsieved portion of the sample material will be containerized into one 8-ounce jars and the sieved portion of the sample will be containerized into another 8-ounce jar.

THIS PAGE LEFT INTENTIONALLY BLANK

Based on the site DQOs the 8-ounce jars of surface soil and sediment samples should be submitted to PEL, Tampa, Florida (a NELAC certified laboratory) for low level PAH, and/or TCL SVOC, RCRA metals, PCB, and/or Hexavalent Chromium analysis. RCRA metals will be analyzed from both the sieved and unsieved portions of the sample. All other analysis will be conducted on the unsieved portion.

The location of each aliquot will also be logged in accordance with SESD FBQSTP Global Positioning System (SESDPROC- 110-R3) using a Trimble GPS.

A description of the color and texture of the aliquot material will be recorded in each box.

The ***station ID*** for each location will consist of seven characters, beginning with the six digit Property ID designation for the property followed by a alphabetic letter beginning with "A".

e.g. CV0001A would be the station ID for the front yard 5-pt composite sample collected at the property with Property ID CV0001.

The ***sample ID*** for each sample is the station ID with "CS" (composite soil), "GS" (grab soil), "SD" (sediment), or "SW" (surface water) appended, therefore, the sample ID for this sample would be CV0001A-CS. Co-located duplicates will be designated by appending a "D" to the end of the sample ID. Pan splits will be identified by appending an "SP" to the end of the sample ID.

ADDRESS: (b) (6) PROPERTY ID: FM0099

DATE: 2/4/13 ARRIVAL TIME: 1300

Other pertinent information (weather conditions, etc.):

Partially Cloudy 47°F

PROPERTY COMMENTS:

Resident Home

(b) (6) legal team

Grid for property sketch

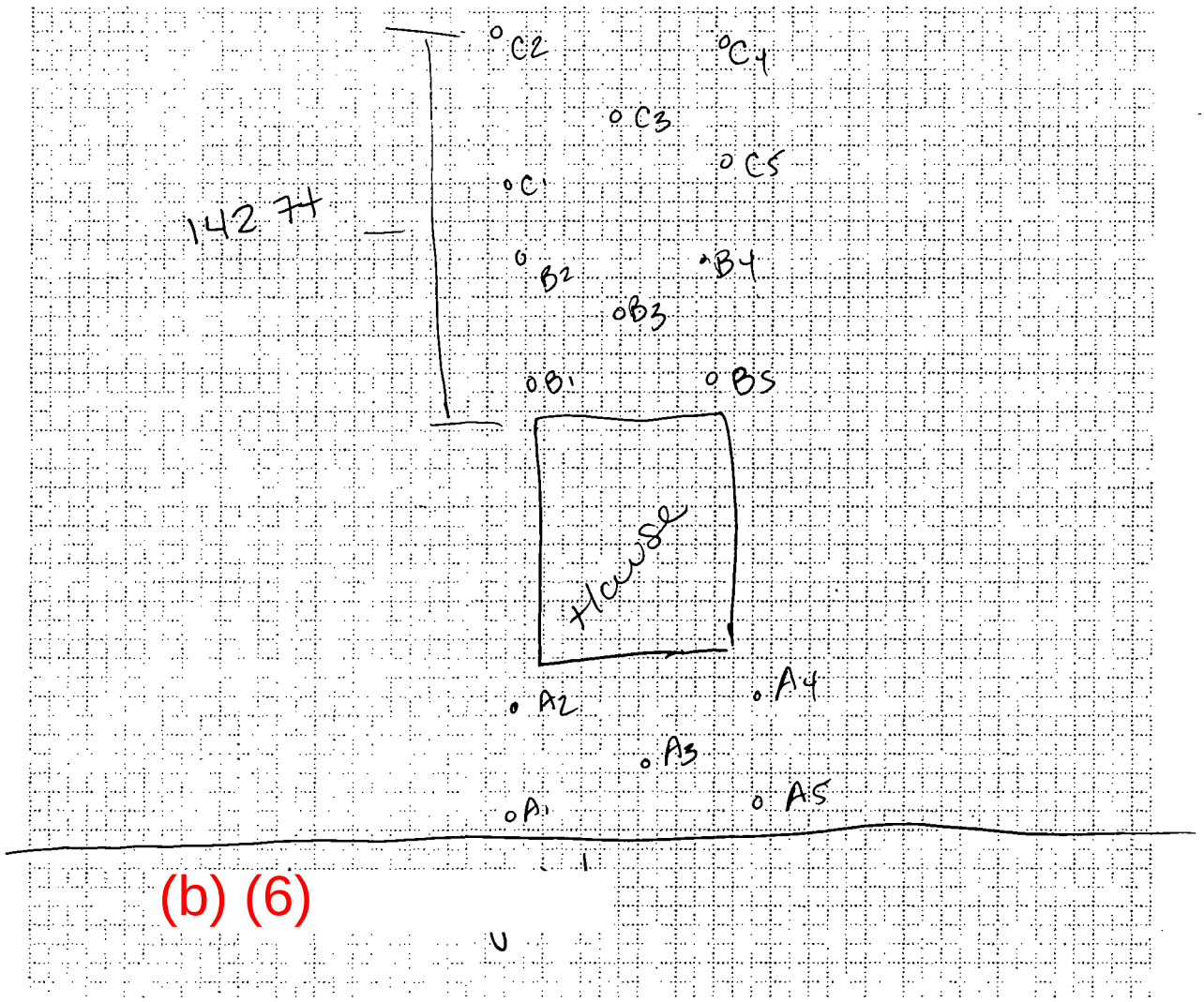

STATION ID: FM0099A **SAMPLE ID:** FM0099A-CS-SP

SAMPLE COLLECTION TIME: 1315

Description of sample location (front, back, side yard; vegetable garden; play set; ditch, etc):

Collection: Composite or Grab **MS/MSD?** Y or N

Field Duplicate or Split: Yes or No *If yes, indicate* **Duplicate/split sample station ID:** FM0099A

GPS Coordinates: Trimble [✓] Instrument #: 018598 Logged? Y or N

Aliquot #1: *Latitude:* 33.56896874 N *Longitude* 86.80410945 W

Media description: Brwn silt followed by tan/orange clay

Aliquot #2 *Latitude:* 33.56896841 N *Longitude* 86.80417821 W

Media description: Brwn silt followed by tan/orange clay

Aliquot #3: *Latitude:* 33.56901634 N *Longitude* 86.80414187 W

Media description: Brwn silt followed by tan/orange clay w/ small coal fragments

Aliquot #4: *Latitude:* 33.56905900 N *Longitude* 86.80416658 W

Media description: Dk brwn silt w/ small coal fragments

Aliquot #5: *Latitude:* 33.56905928 N *Longitude* 86.80411184 W

Media description: Dk brwn silt

STATION ID: FM0099B **SAMPLE ID:** FM0099B-CS-SP

SAMPLE COLLECTION TIME: 1326

Description of sample location (front, back, side yard; vegetable garden; play set; ditch, etc):

Collection: Composite or Grab **MS/MSD?** Y or N

Field Duplicate or Split: Yes or No *If yes, indicate* **Duplicate/split sample station ID:** FM099B

GPS Coordinates: Trimble [✓] Instrument #: 018598 Logged? Y or N

Aliquot #1: *Latitude:* 33.56900216 N *Longitude* 86.80434942 W

Media description: Brwn silty clay followed by tan/orange clay

Aliquot #2 *Latitude:* 33.56899676 N *Longitude* 86.80449484 W

Media description: Brwn silt w/ coal fragments

Aliquot #3: *Latitude:* 33.56905036 N *Longitude* 86.80442343 W

Media description: Brwn silt w/ coal fragments

Aliquot #4: *Latitude:* 33.56912136 N *Longitude* 86.80448230 W

Media description: Dk Brwn silt

Aliquot #5: *Latitude:* 33.56911652 N *Longitude* 86.80436454 W

Media description: Dk brwn silt

(b) (6)

ADDRESS: _____ PROPERTY ID: FM0099

DATE: 2/4/13 ARRIVAL TIME: 1300

Other pertinent information (weather conditions, etc.):
Partially Cloudy, 47°F

PROPERTY COMMENTS:
Resident Home

(b) (6) legal team

Grid for property sketch

Refer to page 6

Brittney Brown
2/4/13

STATION ID: FM0099C **SAMPLE ID:** FM0099C-CS-SP

SAMPLE COLLECTION TIME: 1333

Description of sample location (front, back, side yard; vegetable garden; play set; ditch, etc):

Collection: Composite or Grab **MS/MSD?** Y or N

Field Duplicate or Split: *Yes or No* ***If yes, indicate*** **Duplicate/split sample station ID:** FM0099C

GPS Coordinates: Trimble [✓] Instrument #: 018598 Logged? Y or N

Aliquot #1: *Latitude:* 33.56900230 N *Longitude* 86.80459914 W

Media description: Brun/Rust silty clay

Aliquot #2 *Latitude:* 33.56901439 N *Longitude* 86.80475373 W

Media description: Brun/Rust silty clay

Aliquot #3: *Latitude:* 33.56906246 N *Longitude* 86.80465066 W

Media description: Brun/Rust silty clay

Aliquot #4: *Latitude:* 33.56911573 N *Longitude* 86.80472330 W

Media description: DK brun silt

Aliquot #5: *Latitude:* 33.56912532 N *Longitude* 86.80457617 W

Media description: DK brun silt

STATION ID: **SAMPLE ID:**

SAMPLE COLLECTION TIME:

Description of sample location (front, back, side yard; vegetable garden; play set; ditch, etc):

Collection: Composite or Grab **MS/MSD?** Y or N

Field Duplicate or Split: *Yes or No* ***If yes, indicate*** **Duplicate/split sample station ID:**

GPS Coordinates: Trimble [ ] Instrument #: Logged? Y or N

Aliquot #1: *Latitude:* N *Longitude* W

Media description:

Aliquot #2 *Latitude:* N *Longitude* W

Media description:

Aliquot #3: *Latitude:* N *Longitude* W

Media description:

Aliquot #4: *Latitude:* N *Longitude* W

Media description:

Aliquot #5: *Latitude:* N *Longitude* W

Media description:

ADDRES (b) (6) PROPERTY ID: CV0083

DATE: 2/4/13 ARRIVAL TIME: 1423

Other pertinent information (weather conditions, etc.):
Partially Cloudy, 51°F

PROPERTY COMMENTS:
Resident Home

(b) (6) legal team

Grid for property sketch

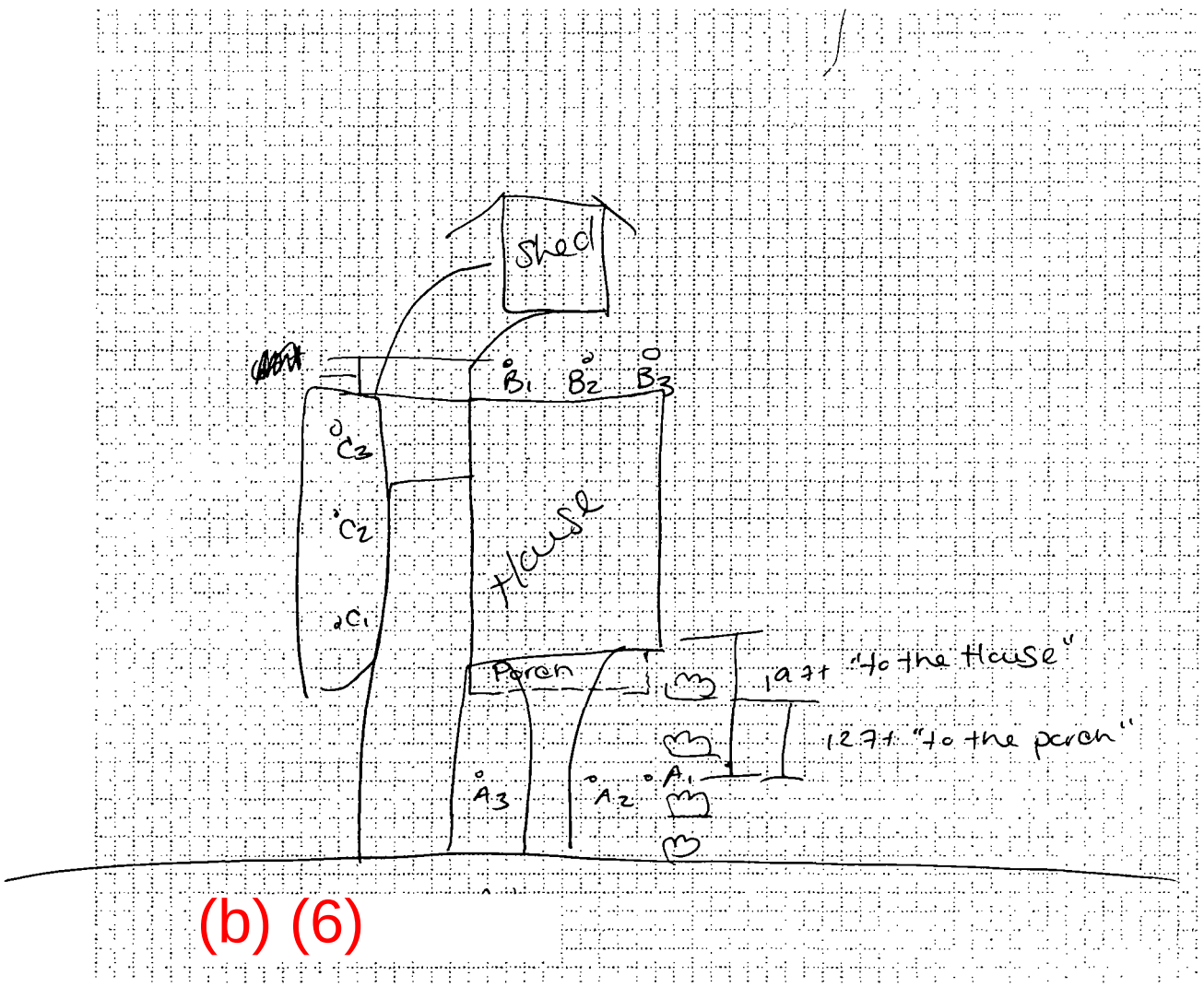

(b) (6)

STATION ID: CV0083A **SAMPLE ID:** CV0083A-CS-SP

SAMPLE COLLECTION TIME: 1432

Description of sample location (front, back, side yard; vegetable garden; play set; ditch, etc):

Collection: Composite or Grab **MS/MSD?** Y or N

Field Duplicate or Split: Yes or No *If yes, indicate* **Duplicate/split sample station ID:** CV0083A

GPS Coordinates: Trimble [✓] Instrument #: 018598 Logged? Y or N

Aliquot #1: *Latitude:* 33.55493154 N *Longitude* 86.80363095 W

Media description: Brun silt w/ gravel & coal fragments

Aliquot #2 *Latitude:* 33.55495302 N *Longitude* 86.80362421 W

Media description: Brun silt w/ gravel & coal fragments

Aliquot #3: *Latitude:* 33.55500209 N *Longitude* 86.80361729 W

Media description: Brun silt w/ gravel & coal fragments

Aliquot #4: *Latitude:* N *Longitude* W

Media description:

Aliquot #5: *Latitude:* N *Longitude* W

Media description:

BB

STATION ID: CV0083B **SAMPLE ID:** CV0083B-CS-SP

SAMPLE COLLECTION TIME: 1443

Description of sample location (front, back, side yard; vegetable garden; play set; ditch, etc):

Collection: Composite or Grab **MS/MSD?** Y or N

Field Duplicate or Split: Yes or No *If yes, indicate* **Duplicate/split sample station ID:** CV0083B

GPS Coordinates: Trimble [✓] Instrument #: 018598 Logged? Y or N

Aliquot #1: *Latitude:* 33.55499170 N *Longitude* 86.80338397 W

Media description: Brun sandy silt w/ gravel

Aliquot #2 *Latitude:* 33.55496530 N *Longitude* 86.80339915 W

Media description: Brun sandy silt

Aliquot #3: *Latitude:* 33.55494877 N *Longitude* 86.80339522 W

Media description: Brun sandy silt w/ coal fragments

Aliquot #4: *Latitude:* N *Longitude* W

Media description:

Aliquot #5: *Latitude:* N *Longitude* W

Media description:

BB

ADDRESS: (b) (6) PROPERTY ID: CV0083

DATE: 2/4/13 ARRIVAL TIME: 1423

Other pertinent information (weather conditions, etc.):

Partially cloudy, 51°F

PROPERTY COMMENTS:

Resident Home

(b) (6) legalteam

Grid for property sketch

Refer to page 10

Brittney Brown

2/4/13

STATION ID: CV0083C **SAMPLE ID:** CV0083C-CS-SP

SAMPLE COLLECTION TIME: 1438

Description of sample location (front, back, side yard; vegetable garden; play set; ditch, etc):

Collection: Composite or Grab **MS/MSD?** Y or N

Field Duplicate or Split: *Yes or No* *If yes, indicate* **Duplicate/split sample station ID:** CV0083C

GPS Coordinates: Trimble [✓] Instrument #: 018598 Logged? Y or N

Aliquot #1: *Latitude:* 33.55505226 N *Longitude* 86.80350268 W

Media description: Brun sandy silt

Aliquot #2 *Latitude:* 33.55506210 N *Longitude* 86.80346366 W

Media description: Brun sandy silt

Aliquot #3: *Latitude:* ~~86.8~~ 33.55504680 N *Longitude* 86.80342388 W

Media description: Brun sandy silt

Aliquot #4: *Latitude:* N *Longitude* W

Media description:

Aliquot #5: *Latitude:* N *Longitude* W

Media description:

BB

STATION ID: **SAMPLE ID:**

SAMPLE COLLECTION TIME:

Description of sample location (front, back, side yard; vegetable garden; play set; ditch, etc):

Collection: Composite or Grab **MS/MSD?** Y or N

Field Duplicate or Split: *Yes or No* *If yes, indicate* **Duplicate/split sample station ID:**

GPS Coordinates: Trimble [ ] Instrument #: Logged? Y or N

Aliquot #1: *Latitude:* N *Longitude* W

Media description:

Aliquot #2 *Latitude:* N *Longitude* W

Media description:

Aliquot #3: *Latitude:* N *Longitude* W

Media description:

Aliquot #4: *Latitude:* N *Longitude* W

Media description:

Aliquot #5: *Latitude:* N *Longitude* W

Media description:

BB

ADDRESS (b) (6) PROPERTY ID: CV0019

DATE: 2/4/13 ARRIVAL TIME: 1517

Other pertinent information (weather conditions, etc.):

Partially Cloudy, 52°F

PROPERTY COMMENTS:

Resident Home

(b) (6) legal team

BB 2/4/13

Grid for property sketch

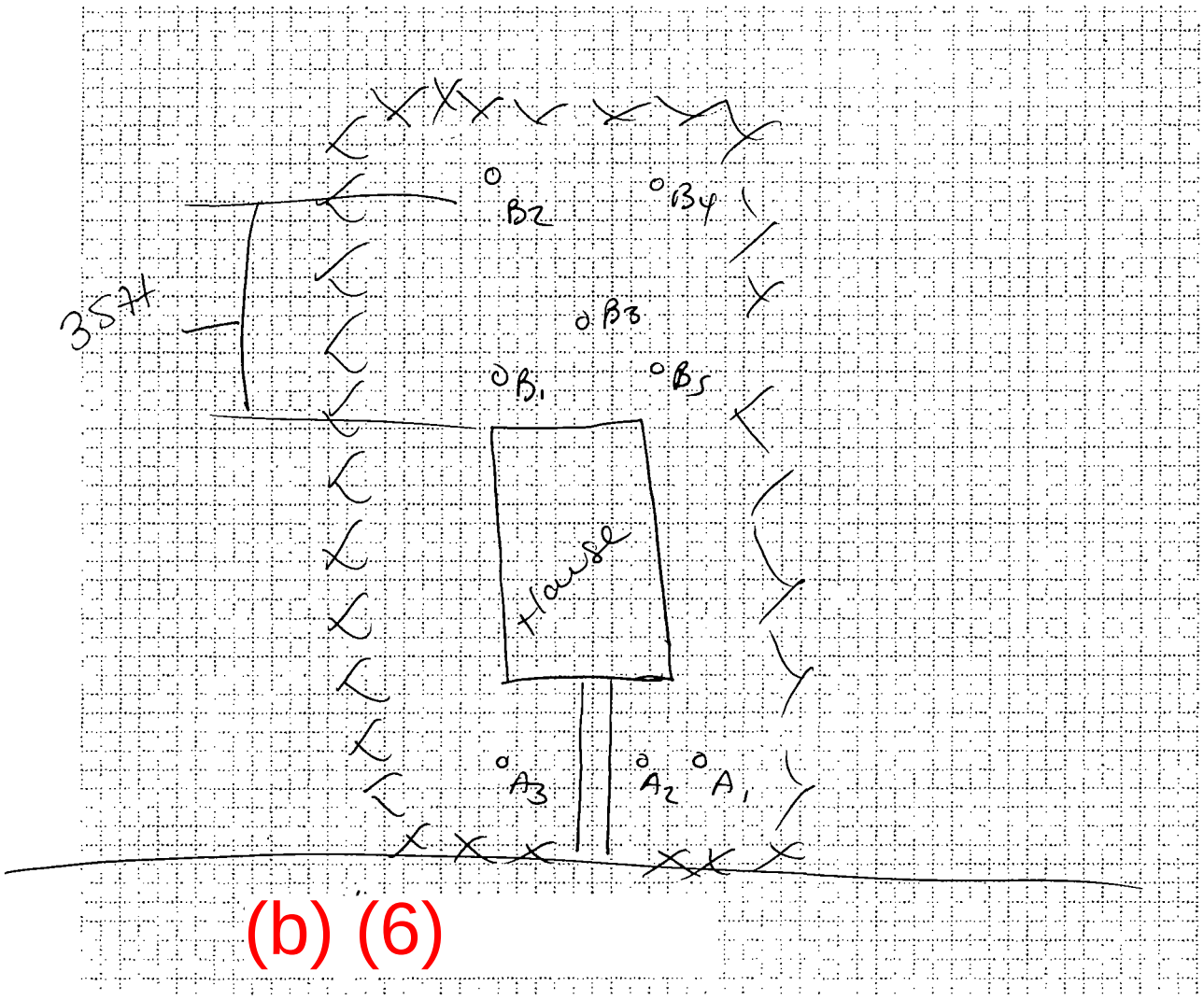

STATION ID: CV0019A **SAMPLE ID:** CV0019A-CS-SP

SAMPLE COLLECTION TIME: 1531

Description of sample location (front, back, side yard; vegetable garden; play set; ditch, etc):

Collection: Composite or Grab **MS/MSD?** Y or N

Field Duplicate or Split: Yes or No *If yes, indicate* **Duplicate/split sample station ID:** CV0019A

GPS Coordinates: Trimble [ ] Instrument #: 018598 Logged? Y or N

Aliquot #1: *Latitude:* 33.55741227 N *Longitude* 86.80677927 W

Media description: Brun silt w/ gravel + coal fragments

Aliquot #2 *Latitude:* 33.55737729 N *Longitude* 86.80678103 W

Media description: Brun silt w/ gravel

Aliquot #3: *Latitude:* 33.55735231 N *Longitude* 86.80678102 W

Media description: Brun silt w/ gravel

Aliquot #4: *Latitude:* N *Longitude* W

Media description:

Aliquot #5: *Latitude:* N *Longitude* W

Media description:

STATION ID: CV0019B **SAMPLE ID:** CV0019B-CS-SP

SAMPLE COLLECTION TIME: 1527

Description of sample location (front, back, side yard; vegetable garden; play set; ditch, etc):

Collection: Composite or Grab **MS/MSD?** Y or N

Field Duplicate or Split: Yes or No *If yes, indicate* **Duplicate/split sample station ID:** CV0019B

GPS Coordinates: Trimble [✓] Instrument #: 018598 Logged? Y or N

Aliquot #1: *Latitude:* 33.55736746 N *Longitude* 86.80698990 W

Media description: Brun silt w/ gravel

Aliquot #2 *Latitude:* 33.55737176 N *Longitude* 86.80708020 W

Media description: Brun silt w/ gravel

Aliquot #3: *Latitude:* 33.55739006 N *Longitude* 86.80703888 W

Media description: Brun silt w/ gravel

Aliquot #4: *Latitude:* 33.55742321 N *Longitude* 86.80707213 W

Media description: Brun silt w/ gravel

Aliquot #5: *Latitude:* 33.55741284 N *Longitude* 86.80699117 W

Media description: Brun silt w/ gravel

ADDRESS: (b) (6) PROPERTY ID: HP032S

DATE: 2/5/13 ARRIVAL TIME: 0840

Other pertinent information (weather conditions, etc.):

Cloudy, 55°F

PROPERTY COMMENTS:

Vacant lot

(b) (6) legal team

Grid for property sketch

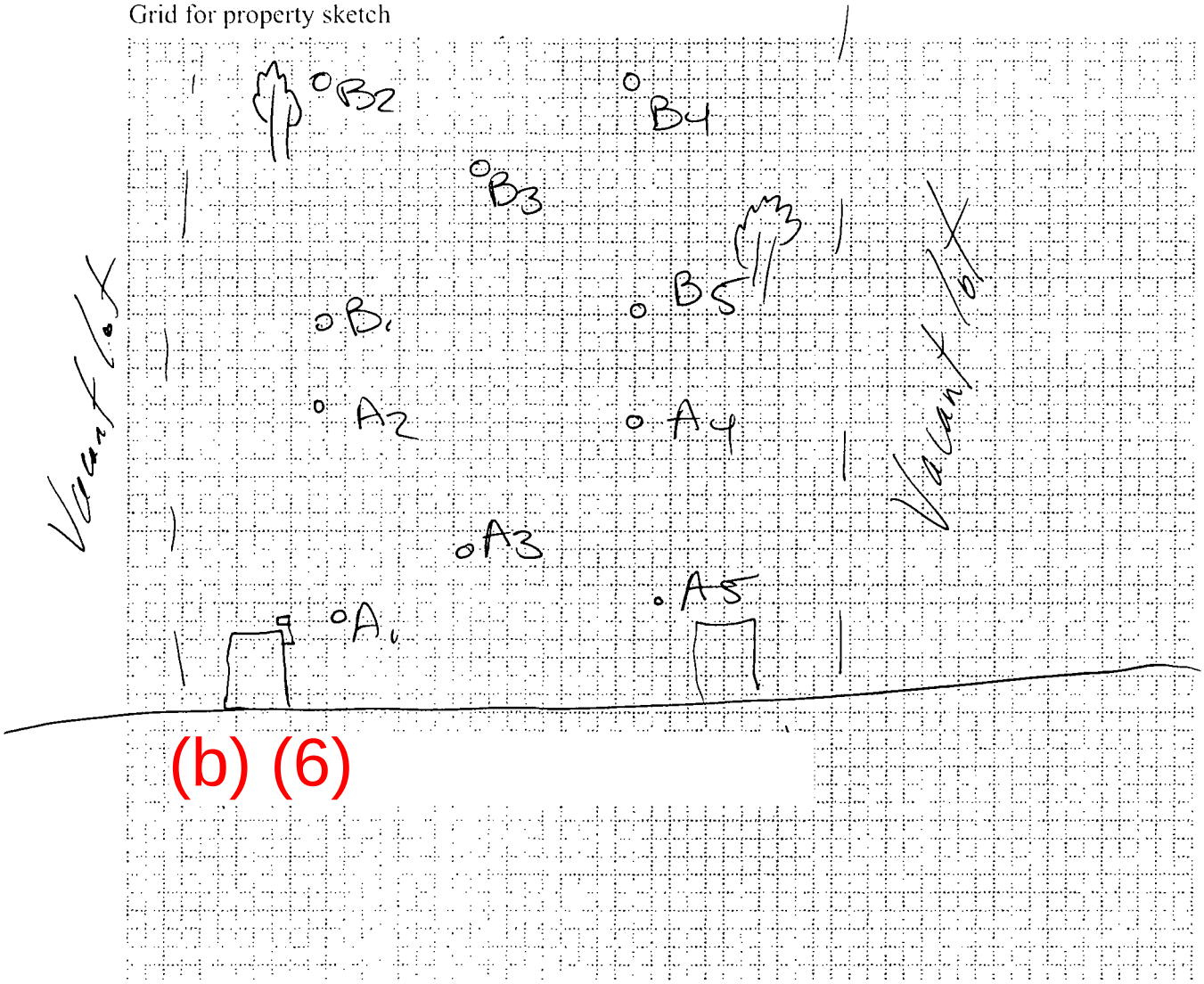

STATION ID: HP0325A **SAMPLE ID:** HP0325A-CS-SP

SAMPLE COLLECTION TIME: 0855

Description of sample location (front, back, side yard; vegetable garden; play set; ditch, etc):

Collection: Composite or Grab **MS/MSD?** Y or N

Field Duplicate or Split: Yes or No *If yes, indicate* **Duplicate/split sample station ID:** HP0325A

GPS Coordinates: Trimble [✓] Instrument #: 018165 Logged? Y or N

Aliquot #1: *Latitude:* 33.56470203 N *Longitude* 86.79684198 W

Media description: red/brown silty clay w/ coal fragments

Aliquot #2 *Latitude:* 33.56463098 N *Longitude* 86.79671117 W

Media description: brown sandy silt

Aliquot #3: *Latitude:* 33.56464668 N *Longitude* 86.79680200 W

Media description: same as above

Aliquot #4: *Latitude:* 33.56454604 N *Longitude* 86.79676142 W

Media description: same as above

Aliquot #5: *Latitude:* 33.56461708 N *Longitude* 86.79691122 W

Media description: same as above

STATION ID: HP0325B **SAMPLE ID:** HP0325B-CS-SP

SAMPLE COLLECTION TIME: 0900

Description of sample location (front, back, side yard; vegetable garden; play set; ditch, etc):

Collection: Composite or Grab **MS/MSD?** Y or N

Field Duplicate or Split: Yes or No *If yes, indicate* **Duplicate/split sample station ID:** HP0325B

GPS Coordinates: Trimble [✓] Instrument #: 018165 Logged? Y or N

Aliquot #1: *Latitude:* 33.56459059 N *Longitude* 86.79666028 W

Media description: dk brown sandy silt w/ brick

Aliquot #2 *Latitude:* 33.56454816 N *Longitude* 86.79656220 W

Media description: dk brown sandy silt

Aliquot #3: *Latitude:* 33.56454197 N *Longitude* 86.79665132 W

Media description: same as above

Aliquot #4: *Latitude:* 33.56449367 N *Longitude* 86.79659088 W

Media description: same as above

Aliquot #5: *Latitude:* 33.56453194 N *Longitude* 86.79670402 W

Media description: same as above

(b) (6)

CV0800

ADDRESS: _____ PROPERTY ID: ~~CV0127~~ BB 2/5/13

DATE: 2/5/13 ARRIVAL TIME: 0933

Other pertinent information (weather conditions, etc.):

Cloudy, 53°F

PROPERTY COMMENTS:

Resident Home

w/ Ralph Norman legal team

Grid for property sketch

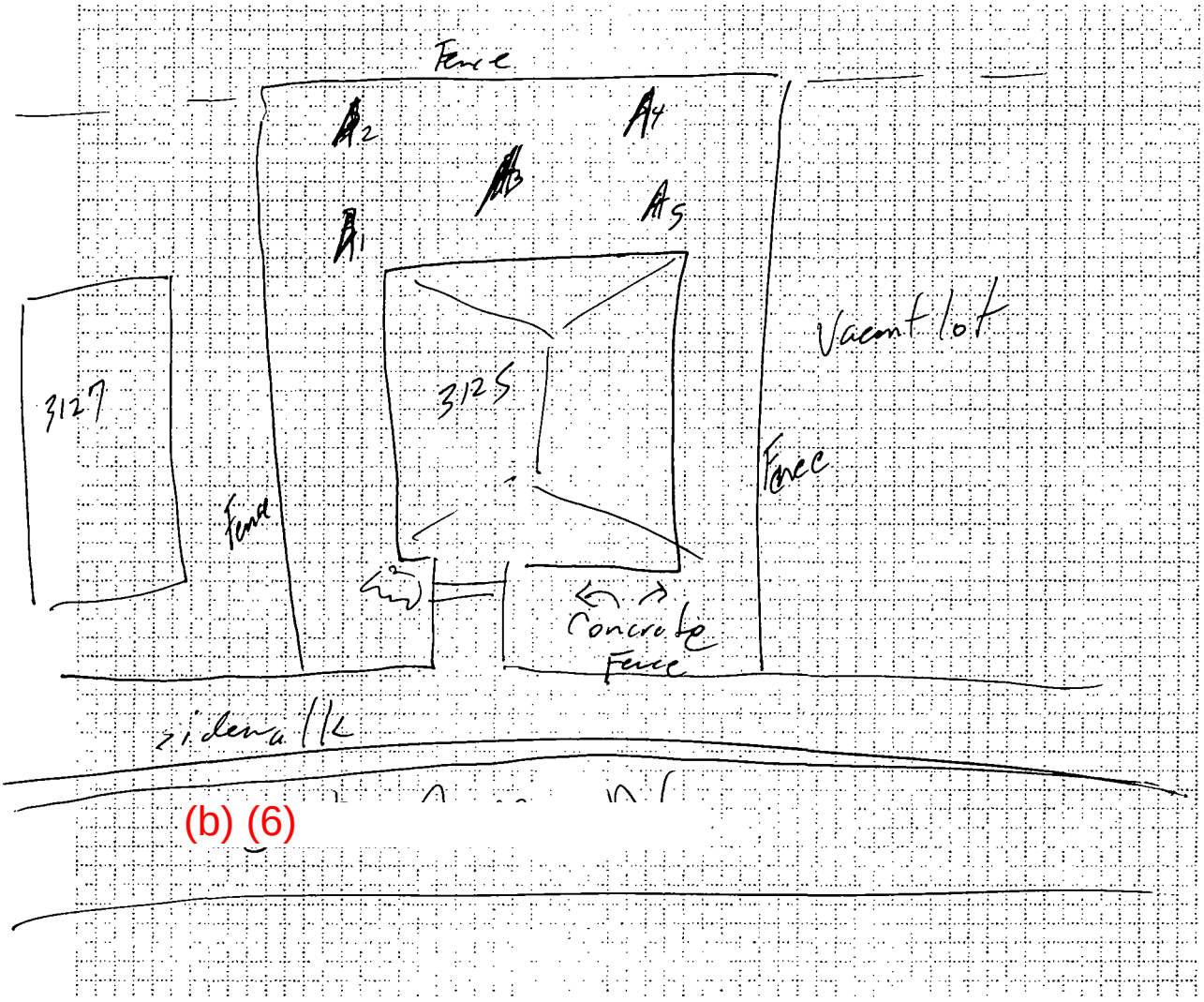

STATION ID: CV0800A **SAMPLE ID:** CV0800A

SAMPLE COLLECTION TIME: 0940

Description of sample location (front, back, side yard; vegetable garden; play set; ditch, etc):

Collection: Composite or Grab **MS/MSD?** Y or N

Field Duplicate or Split: *Yes or No* ***If yes, indicate*** **Duplicate/split sample station ID:** CV0800A

GPS Coordinates: Trimble [✓] Instrument #: 018165 Logged? Y or N

Aliquot #1: *Latitude:* 33.55382171 N *Longitude* 86.80390283 W

Media description: dk brwn silt w/ minor coal fragments

Aliquot #2 *Latitude:* 33.55370053 N *Longitude* 86.80390134 W

Media description: ~~Same~~ dk brwn silt

Aliquot #3: *Latitude:* 33.55379525 N *Longitude* 86.80392072 W

Media description: dk brwn clayey silt

Aliquot #4: *Latitude:* 33.55376699 N *Longitude* 86.80395494 W

Media description: same as above

Aliquot #5: *Latitude:* 33.55381794 N *Longitude* 86.80395608 W

Media description: dk brwn/rust colored silty clay w/coal fragments

STATION ID: **SAMPLE ID:**

SAMPLE COLLECTION TIME:

Description of sample location (front, back, side yard; vegetable garden; play set; ditch, etc):

Collection: Composite or Grab **MS/MSD?** Y or N

Field Duplicate or Split: *Yes or No* ***If yes, indicate*** **Duplicate/split sample station ID:**

GPS Coordinates: Trimble [ ] Instrument #: Logged? Y or N

Aliquot #1: *Latitude:* N *Longitude* W

Media description:

Aliquot #2 *Latitude:* N *Longitude* W

Media description:

Aliquot #3: *Latitude:* N *Longitude* W

Media description:

Aliquot #4: *Latitude:* N *Longitude* W

Media description:

Aliquot #5: *Latitude:* N *Longitude* W

Media description:

ADDRESS (b) (6) PROPERTY ID: CV0127

DATE: 2/5/13 ARRIVAL TIME: 0958

Other pertinent information (weather conditions, etc.):

Rainy, 53°F

PROPERTY COMMENTS:

Resident Home

w/ Ralph Norman legal team

Grid for property sketch

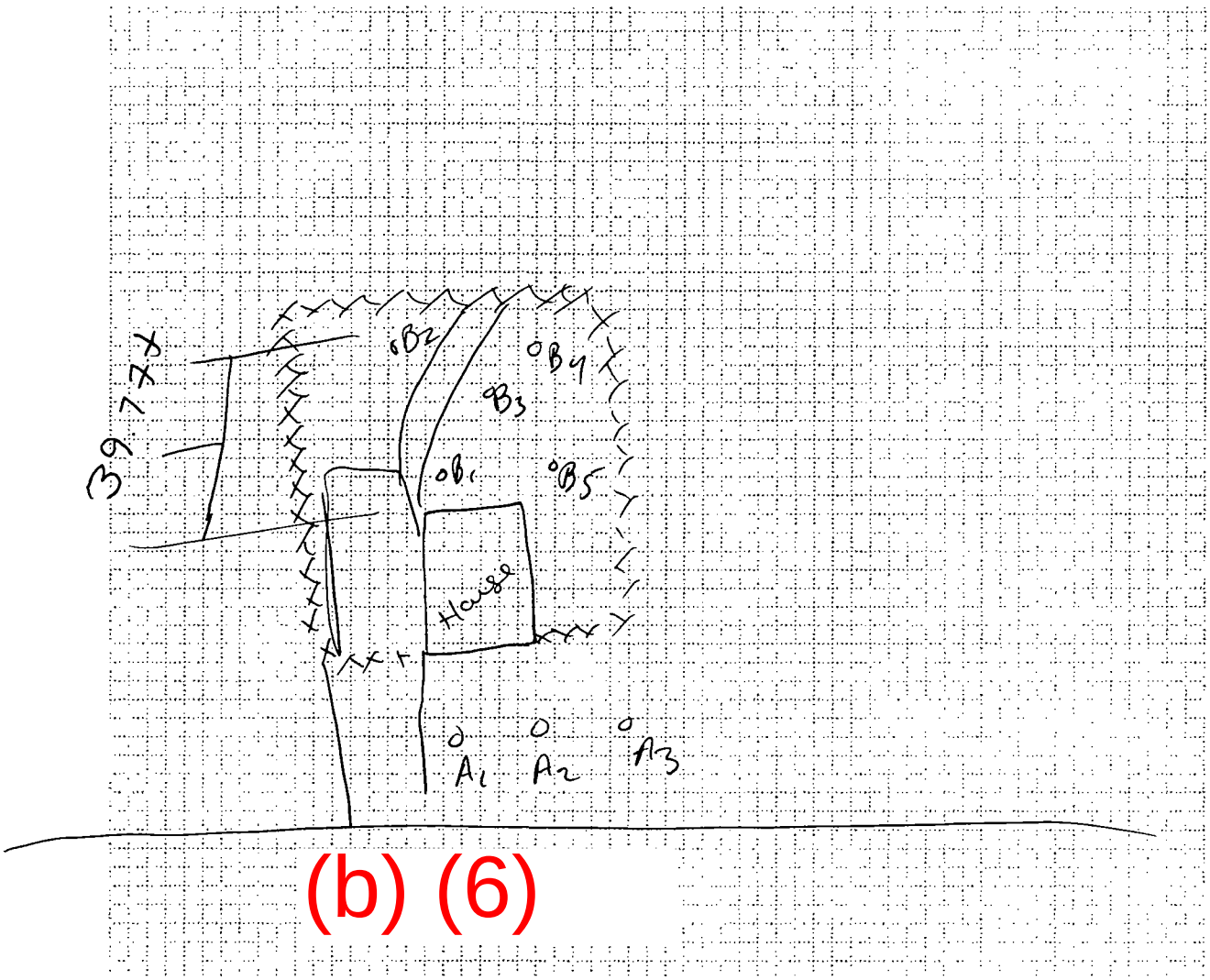

STATION ID: CV0127A **SAMPLE ID:** CV0127A-CS-SP

SAMPLE COLLECTION TIME: 1014

Description of sample location (front, back, side yard; vegetable garden; play set; ditch, etc):

Collection: Composite or Grab **MS/MSD?** Y or N

Field Duplicate or Split: *Yes or No* ***If yes, indicate*** **Duplicate/split sample station ID:** CV0127A

GPS Coordinates: Trimble [✓] Instrument #: 018165 Logged? Y or N

Aliquot #1: *Latitude:* 33.56053170 N *Longitude* 86.80502082 W

Media description: DK brun clay silt

Aliquot #2 *Latitude:* 33.56057097 N *Longitude* 86.80502319 W

Media description: DK brun clay silt

Aliquot #3: *Latitude:* 33.56060623 N *Longitude* 86.80502128 W

Media description: DK brun clay silt

Aliquot #4: *Latitude:* ~~33.56060431~~ N *Longitude* ~~86.80533401~~ W BB 2/5/13

Media description:

Aliquot #5: *Latitude:* ~~33.56060933~~ N *Longitude* ~~86.80523585~~ W BB 2/5/13

Media description:

STATION ID: CV0127B **SAMPLE ID:** CV0127B-CS-SP

SAMPLE COLLECTION TIME: 1024

Description of sample location (front, back, side yard; vegetable garden; play set; ditch, etc):

Collection: Composite or Grab **MS/MSD?** Y or N

Field Duplicate or Split: *Yes or No* ***If yes, indicate*** **Duplicate/split sample station ID:** CV0127B

GPS Coordinates: Trimble [✓] Instrument #: 018165 Logged? Y or N

Aliquot #1: *Latitude:* 33.56054003 N *Longitude* 86.80525301 W

Media description: DK brun clay silt

Aliquot #2 *Latitude:* 33.56051667 N *Longitude* 86.80533216 W

Media description: DK brun clay silt w/ coal fragments

Aliquot #3: *Latitude:* 33.56057369 N *Longitude* 86.80527741 W

Media description: DK brun clay silt w/ coal fragments

Aliquot #4: *Latitude:* 33.56060431 N *Longitude* 86.80533401 W

Media description: DK brun clay silt w/ coal fragments

Aliquot #5: *Latitude:* 33.56060933 N *Longitude* 86.80523585 W

Media description: DK brun clay silt

ADDRESS: (b) (6) PROPERTY ID: CV0439

DATE: 2/5/13 ARRIVAL TIME: 1220

Other pertinent information (weather conditions, etc.):

58°F, Cloudy

PROPERTY COMMENTS:

Resident Home

Grid for property sketch

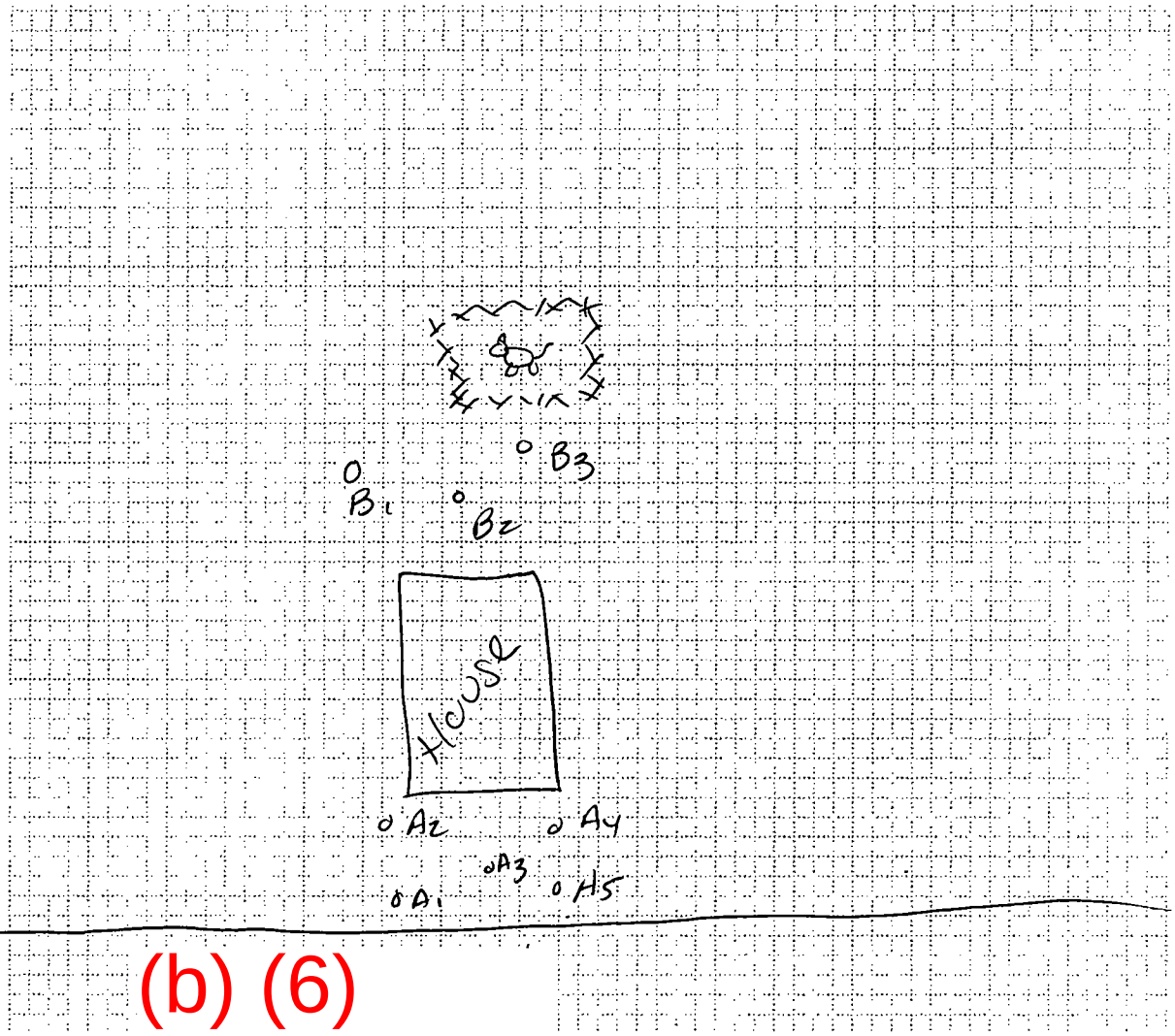

(b) (6)

CV0439A-CS
+
CV0439A-CSD

STATION ID: CV0439A **SAMPLE ID:** CV0439A-CSD

SAMPLE COLLECTION TIME: 1230

Description of sample location (front, back, side yard; vegetable garden; play set; ditch, etc):

Collection: Composite or Grab **MS/MSD?** Y or N

Field Duplicate or Split: Yes or No *If yes, indicate* **Duplicate/split sample station ID:** CV0439HQ 1233

BB 25113

GPS Coordinates: Trimble [✓] Instrument #: 018165 Logged? Y or N

Aliquot #1: *Latitude:* 33.55453894 N *Longitude* 86.55453894 W

Media description: Brwn silt w/ gravel + coal fragments

Aliquot #2 *Latitude:* 33.55453909 N *Longitude* 86.80045981 W

Media description: Brwn silt w/ gravel

Aliquot #3: *Latitude:* 33.55451450 N *Longitude* 86.80047841 W

Media description: Brwn silt w/ gravel

Aliquot #4: *Latitude:* 33.55448293 N *Longitude* 86.80046101 W

Media description: Brwn silt w/ gravel

Aliquot #5: *Latitude:* 33.55447930 N *Longitude* 86.80049120 W

Media description: Brwn silt w/ grave

STATION ID: CV0439B **SAMPLE ID:** CV0439B

SAMPLE COLLECTION TIME: 1237

Description of sample location (front, back, side yard; vegetable garden; play set; ditch, etc):

Collection: Composite or Grab **MS/MSD?** Y or N

Field Duplicate or Split: Yes or No *If yes, indicate* **Duplicate/split sample station ID:**

GPS Coordinates: Trimble [✓] Instrument #: 018165 Logged? Y or N

Aliquot #1: *Latitude:* 33.55458426 N *Longitude* 86.80020046 W

Media description: DK brwn/blk sandy silt w/ gravel

Aliquot #2 *Latitude:* 33.55453967 N *Longitude* 86.80013329 W

Media description: DK brwn/blk sandy silt w/ gravel

Aliquot #3: *Latitude:* 33.55448717 N *Longitude* 86.80013891 W

Media description: DK brwn/blk sandy silt w/ gravel

Aliquot #4: *Latitude:* N *Longitude* W

Media description:

Aliquot #5: *Latitude:* N *Longitude* W

Media description:

BB

(b) (6)

ADDRESS: _____ PROPERTY ID: CV 0832

DATE: 2/5/13 ARRIVAL TIME: 1246

Other pertinent information (weather conditions, etc.):
58°F, Cloudy

PROPERTY COMMENTS:
Resident Home

Grid for property sketch

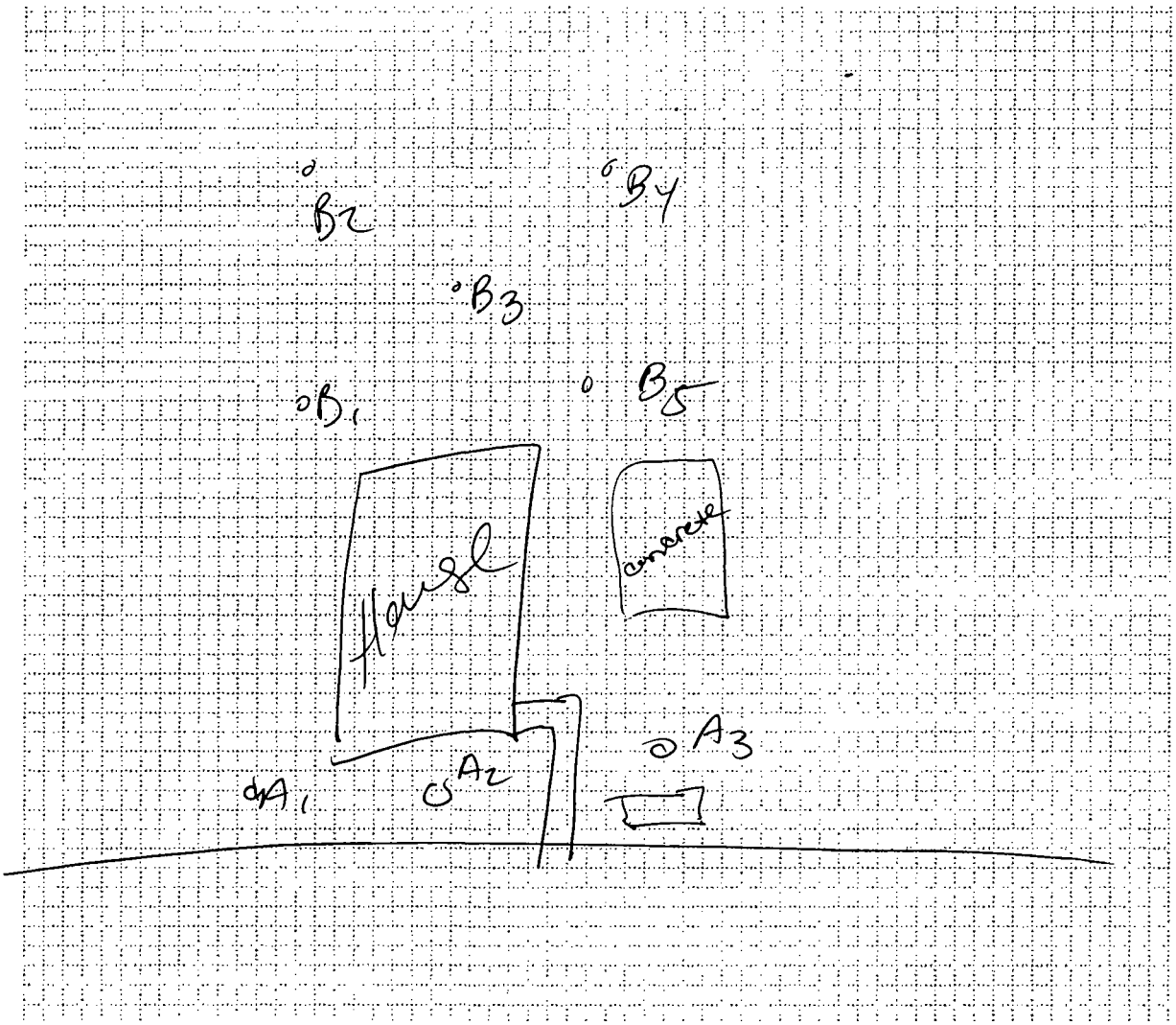

STATION ID: CV0832A **SAMPLE ID:** CV0832A-CS

SAMPLE COLLECTION TIME: 1254

Description of sample location (front, back, side yard; vegetable garden; play set; ditch, etc):

Collection: Composite or Grab **MS/MSD?** Y or N

Field Duplicate or Split: *Yes or No* *If yes, indicate* **Duplicate/split sample station ID:**

GPS Coordinates: Trimble [ ] Instrument #: 018165 Logged? Y or N

Aliquot #1: *Latitude:* 33.55366507 N *Longitude* 86.79692910 W

Media description: Brun silty clay w/gravel

Aliquot #2 *Latitude:* 33.55366684 N *Longitude* 86.79688844 W

Media description: DK brun clay silt w/small coal fragments

Aliquot #3: *Latitude:* 33.55366080 N *Longitude* 86.79684025 W

Media description: DK brun clay silt

Aliquot #4: *Latitude:* N *Longitude* W

Media description:

Aliquot #5: *Latitude:* N *Longitude* W

Media description:

STATION ID: CV0832B **SAMPLE ID:** CV0832B-CS

SAMPLE COLLECTION TIME: 1259

Description of sample location (front, back, side yard; vegetable garden; play set; ditch, etc):

Collection: Composite or Grab **MS/MSD?** Y or N

Field Duplicate or Split: *Yes or No* *If yes, indicate* **Duplicate/split sample station ID:**

GPS Coordinates: Trimble [ ] Instrument #: 018165 Logged? Y or N

Aliquot #1: *Latitude:* 33.55382387 N *Longitude* 86.79689328 W

Media description: tan/orange silty clay w/gravel

Aliquot #2 *Latitude:* 33.55389381 N *Longitude* 86.79690628 W

Media description: DK brun silt

Aliquot #3: *Latitude:* 33.55385732 N *Longitude* 86.79685782 W

Media description: DK brun silt

Aliquot #4: *Latitude:* 33.55389349 N *Longitude* 86.79680389 W

Media description: DK brun silt w/gravel

Aliquot #5: *Latitude:* 33.55380975 N *Longitude* 86.79680871 W

Media description: DK brun silt w/gravel

ADDRESS: (b) (6) PROPERTY ID: CV0673

DATE: 2/5/13 ARRIVAL TIME: 1311

Other pertinent information (weather conditions, etc.):

Cloudy, 58°F

PROPERTY COMMENTS:

Resident Home

Grid for property sketch

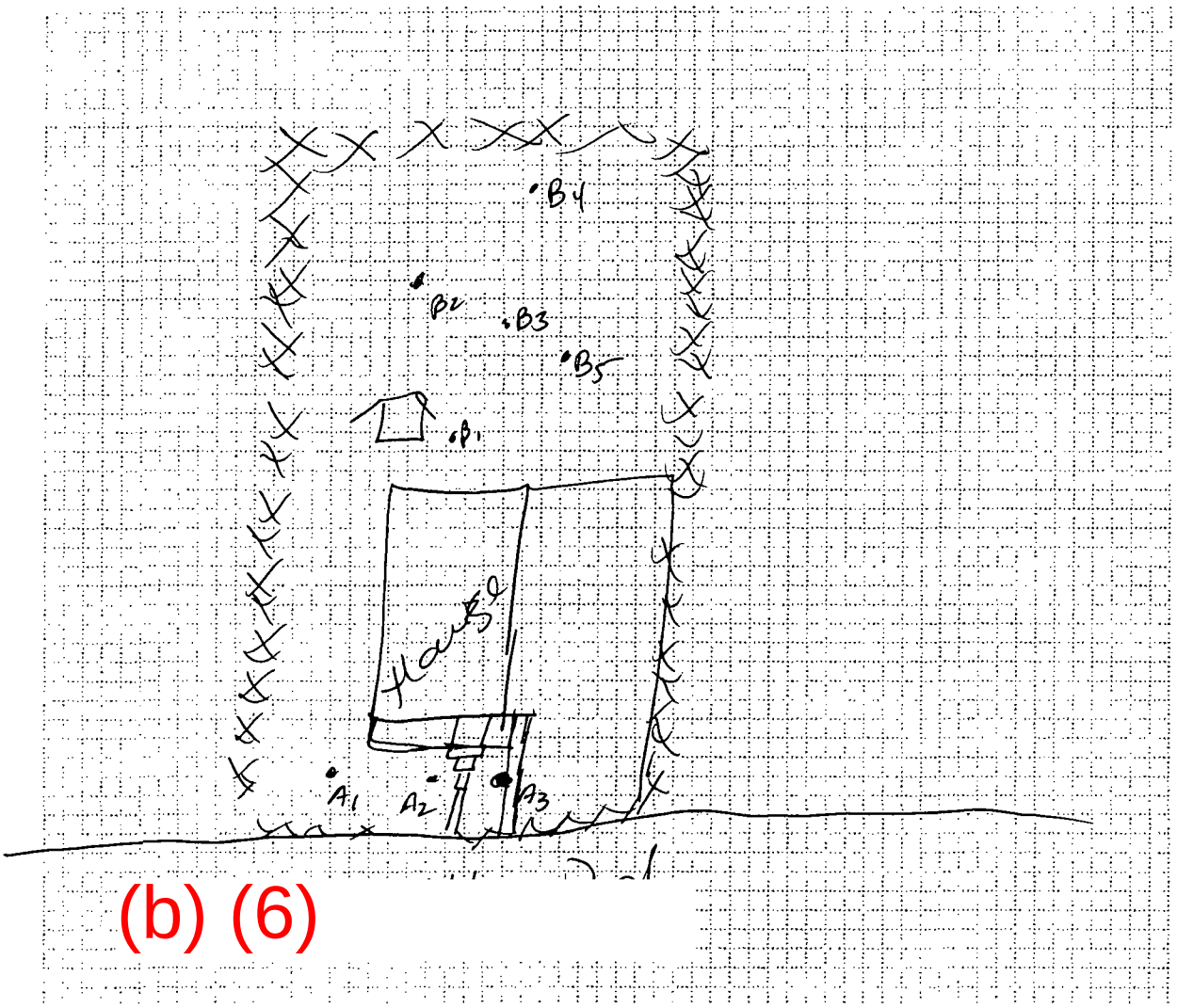

STATION ID: CV0673A **SAMPLE ID:** CV0673A-CS

SAMPLE COLLECTION TIME: 1318

Description of sample location (front, back, side yard; vegetable garden; play set; ditch, etc):

Collection: Composite or Grab **MS/MSD?** Y or N

Field Duplicate or Split: *Yes or No* *If yes, indicate* **Duplicate/split sample station ID:**

GPS Coordinates: Trimble [ ] Instrument #: 018165 Logged? Y or N

Aliquot #1: *Latitude:* 33.56090428 N *Longitude* 86.79937603 W

Media description: Blk silt

Aliquot #2 *Latitude:* 33.56093913 N *Longitude* 86.79933120 W

Media description: Blk silt w/ coal fragments

Aliquot #3: *Latitude:* 33.56097764 N *Longitude* 86.79932570 W

Media description: Brun silt w/ coal fragments

Aliquot #4: *Latitude:* N *Longitude* W

Media description:

Aliquot #5: *Latitude:* N *Longitude* W

Media description:

STATION ID: CV0673B **SAMPLE ID:** CV0673B-CS

SAMPLE COLLECTION TIME: 1323

Description of sample location (front, back, side yard; vegetable garden; play set; ditch, etc):

Collection: Composite or Grab **MS/MSD?** Y or N

Field Duplicate or Split: *Yes or No* *If yes, indicate* **Duplicate/split sample station ID:**

GPS Coordinates: Trimble [✓] Instrument #: 018165 Logged? Y or N

Aliquot #1: *Latitude:* 33.56107298 N *Longitude* 86.79950525 W

Media description: brwn silty clay

Aliquot #2 *Latitude:* 33.56111434 N *Longitude* 86.79960552 W

Media description: brwn silty clay

Aliquot #3: *Latitude:* 33.56112333 N *Longitude* 86.79953709 W

Media description: dk brwn silt w/ coal fragments

Aliquot #4: *Latitude:* 33.56117601 N *Longitude* 86.79958320 W

Media description: Same as above

Aliquot #5: *Latitude:* 33.56111225 N *Longitude* 86.79946556 W

Media description: Same as above

ADDRESS (b) (6) PROPERTY ID: CV0467

DATE: 2/5/13 ARRIVAL TIME: 1405

Other pertinent information (weather conditions, etc.):

53°F, Rainy

PROPERTY COMMENTS:

Resident Home

Grid for property sketch

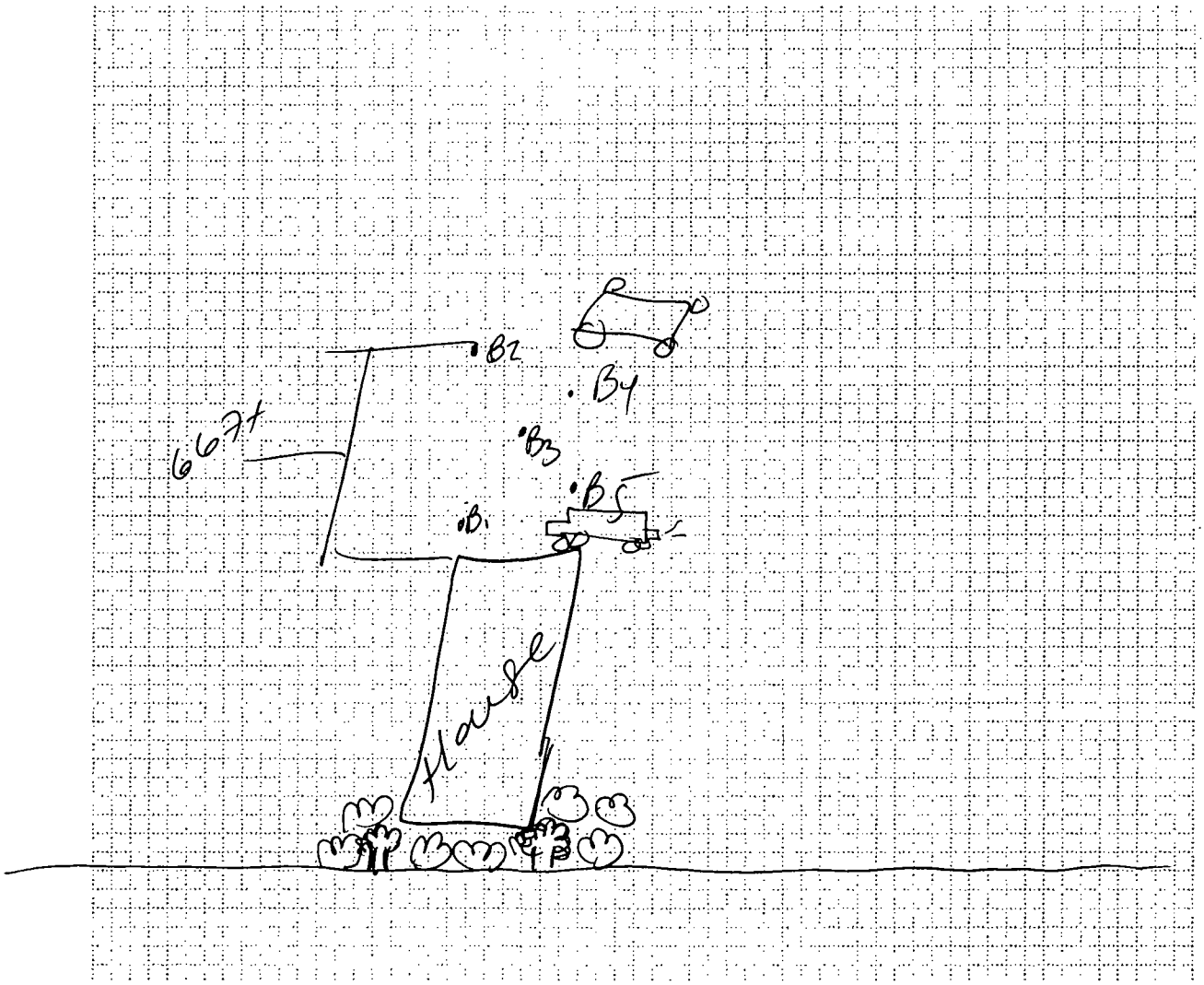

STATION ID: CV0467A **SAMPLE ID:** CV0467A-CS

SAMPLE COLLECTION TIME: 1414

Description of sample location (front, back, side yard; vegetable garden; play set; ditch, etc):

Collection: Composite or Grab **MS/MSD?** Y or N

Field Duplicate or Split: *Yes or No* ***If yes, indicate*** **Duplicate/split sample station ID:**

GPS Coordinates: Trimble [✓] Instrument #: 018165 Logged? Y or N

Aliquot #1: *Latitude:* 33.55667560 N *Longitude* 86.80090028 W

Media description: DK brwn silt w/gravel

Aliquot #2 *Latitude:* 33.55669244 N *Longitude* 86.80105055 W

Media description: DK brwn silt w/gravel

Aliquot #3: *Latitude:* 33.55671702 N *Longitude* 86.80093196 W

Media description: DK brwn silt w/gravel & coal fragments

Aliquot #4: *Latitude:* 33.55674845 N *Longitude* 86.80097552 W

Media description: DK brwn silt w/gravel

Aliquot #5: *Latitude:* 33.55673993 N *Longitude* 86.80090098 W

Media description: DK brwn silt w/gravel

STATION ID: **SAMPLE ID:**

SAMPLE COLLECTION TIME:

Description of sample location (front, back, side yard; vegetable garden; play set; ditch, etc):

Collection: Composite or Grab **MS/MSD?** Y or N

Field Duplicate or Split: *Yes or No* ***If yes, indicate*** **Duplicate/split sample station ID:**

GPS Coordinates: Trimble [ ] Instrument #: Logged? Y or N

Aliquot #1: *Latitude:* N *Longitude* W

Media description:

Aliquot #2 *Latitude:* N *Longitude* W

Media description:

Aliquot #3: *Latitude:* N *Longitude* W

Media description:

Aliquot #4: *Latitude:* N *Longitude* W

Media description:

Aliquot #5: *Latitude:* N *Longitude* W

Media description:

ADDRESS: (b) (6) PROPERTY ID: HP0181

DATE: 2/5/13 ARRIVAL TIME: 1433

Other pertinent information (weather conditions, etc.):

Cloudy, 53°F

PROPERTY COMMENTS:

Resident Home

Grid for property sketch

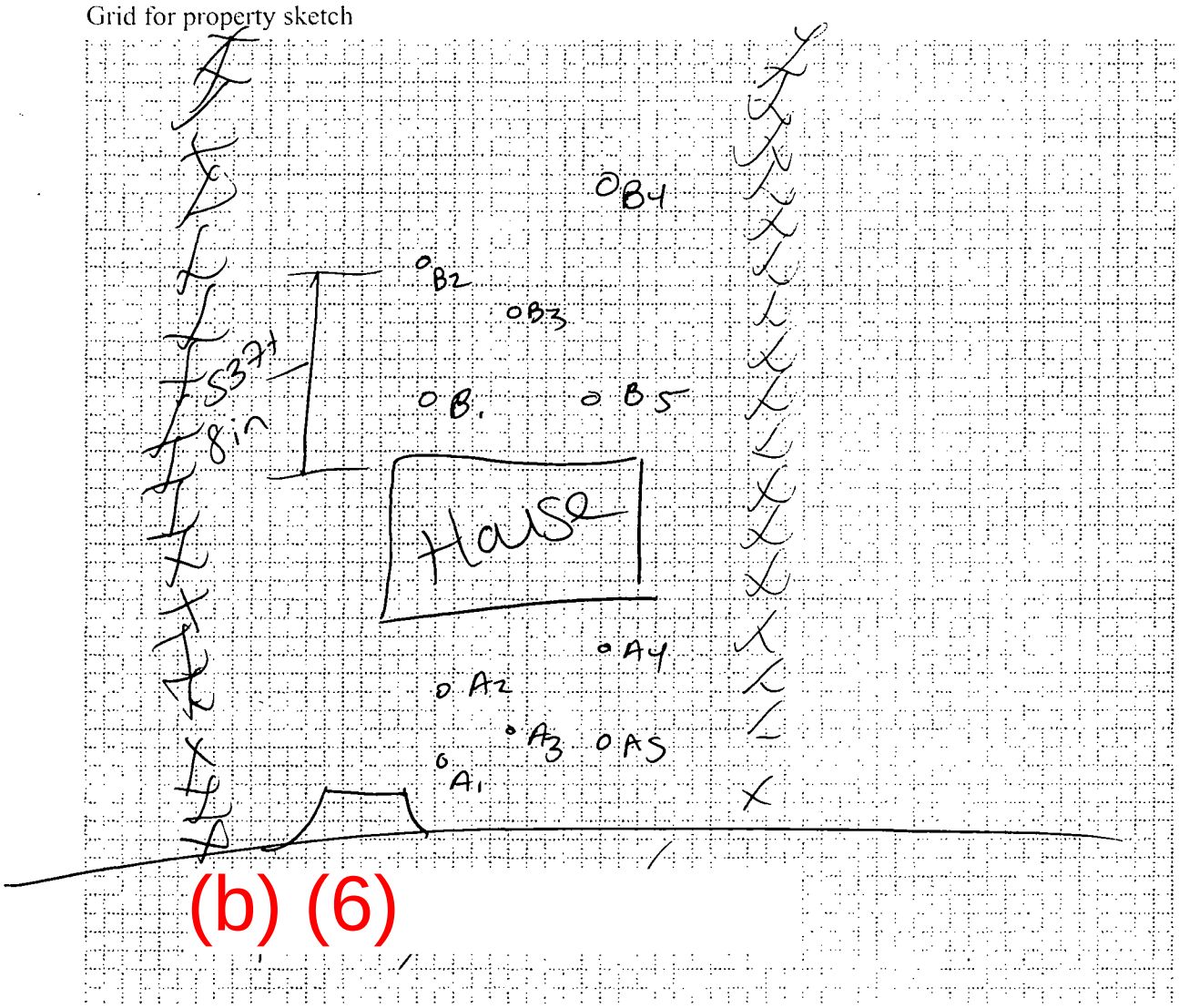

STATION ID: HP0181A **SAMPLE ID:** HP0181A-CS

SAMPLE COLLECTION TIME: 1445

Description of sample location (front, back, side yard; vegetable garden; play set; ditch, etc):

Collection: Composite or Grab **MS/MSD?** Y or N

Field Duplicate or Split: *Yes or No* ***If yes, indicate*** **Duplicate/split sample station ID:**

GPS Coordinates: Trimble [✓] Instrument #: 018165 Logged? Y or N

Aliquot #1: *Latitude:* 33.56584269 N *Longitude* 86.79255951 W

Media description: Brun silt clay

Aliquot #2 *Latitude:* 33.56588091 N *Longitude* 86.79257095 W

Media description: Brun silt clay

Aliquot #3: *Latitude:* 33.56586358 N *Longitude* 86.79253727 W

Media description: Brun silt clay

Aliquot #4: *Latitude:* 33.56588950 N *Longitude* 86.79249744 W

Media description: Brun silt clay

Aliquot #5: *Latitude:* 33.56584779 N *Longitude* 86.79249416 W

Media description: Brun silty clay

STATION ID: HP0181B **SAMPLE ID:** HP0181B-CS

SAMPLE COLLECTION TIME: 1451

Description of sample location (front, back, side yard; vegetable garden; play set; ditch, etc):

Collection: Composite or Grab **MS/MSD?** Y or N

Field Duplicate or Split: *Yes or No* ***If yes, indicate*** **Duplicate/split sample station ID:**

GPS Coordinates: Trimble [✓] Instrument #: 018165 Logged? Y or N

Aliquot #1: *Latitude:* 33.56601054 N *Longitude* 86.79258517 W

Media description: Brun silty clay w/ gravel

Aliquot #2 *Latitude:* 33.56610965 N *Longitude* 86.79258102 W

Media description: Brun silty clay w/ gravel

Aliquot #3: *Latitude:* 33.56606708 N *Longitude* 86.79253986 W

Media description: Brun silty clay w/ gravel

Aliquot #4: *Latitude:* 33.56618621 N *Longitude* 86.79249965 W

Media description: Brun silty clay w/ gravel

Aliquot #5: *Latitude:* 33.56600789 N *Longitude* 86.79249902 W

Media description: Brun silty clay w/ coal fragments

ADDRESS: (b) (6) PROPERTY ID: CHP0180

DATE: 2/5/13 ARRIVAL TIME: 1455

Other pertinent information (weather conditions, etc.):

54°F, cloudy

PROPERTY COMMENTS:

Resident Home

Grid for property sketch

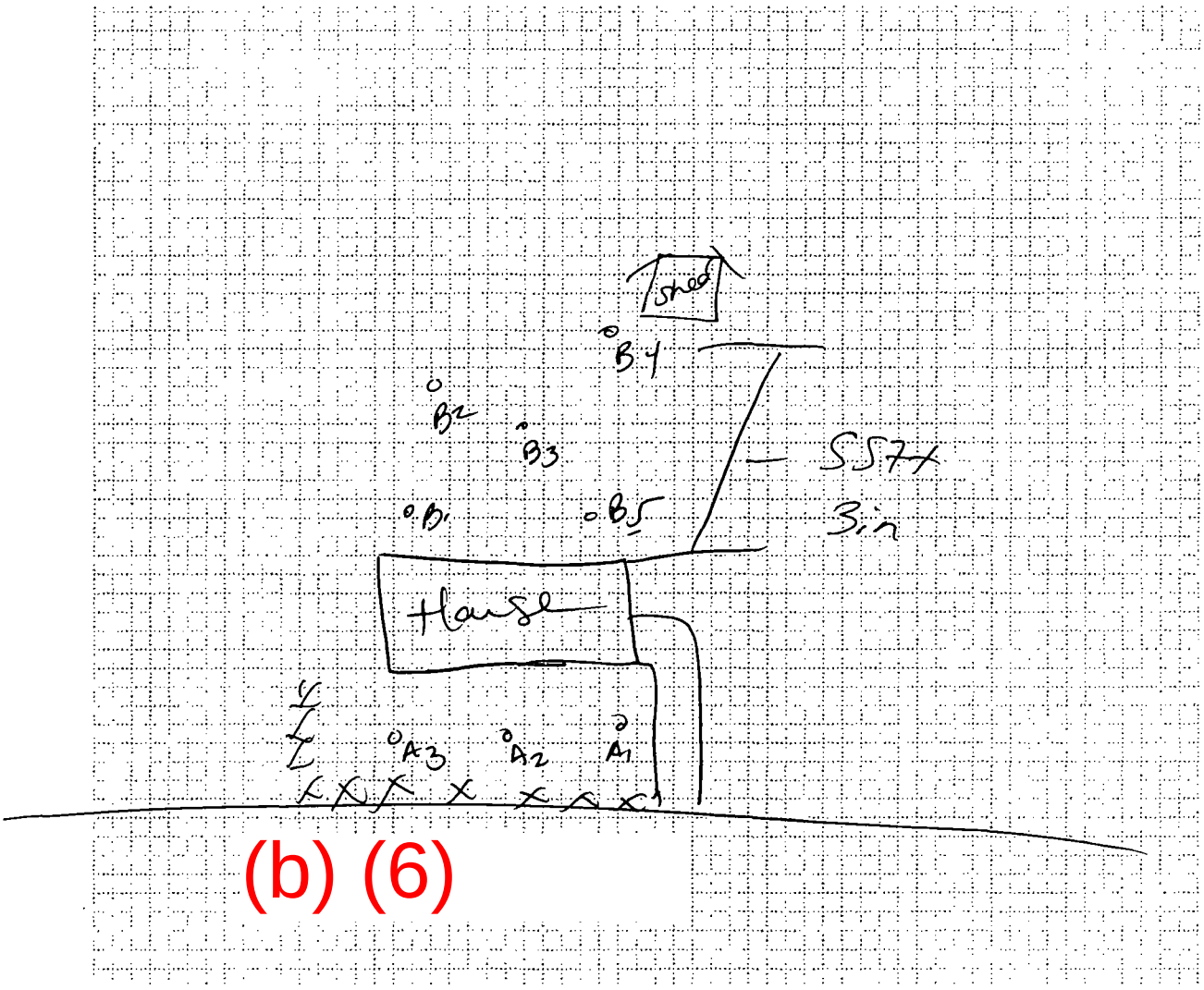

STATION ID: HP0180A **SAMPLE ID:** HP0180A-CS

SAMPLE COLLECTION TIME: 1501

Description of sample location (front, back, side yard; vegetable garden; play set; ditch, etc):

Collection: Composite or Grab **MS/MSD?** Y or N

Field Duplicate or Split: *Yes or No* *If yes, indicate* **Duplicate/split sample station ID:**

GPS Coordinates: Trimble [✓] Instrument #: 018165 Logged? Y or N

Aliquot #1: *Latitude:* 33.56574232 N *Longitude* 86.79271999 W

Media description: Brun silt

Aliquot #2 *Latitude:* 33.56573370 N *Longitude* 86.79268239 W

Media description: Brun silt

Aliquot #3: *Latitude:* ~~Brun silt~~ 2/5/13 33.56573021 N *Longitude* 86.79263518 W

Media description: Brun silt w/ coal chucks

Aliquot #4: *Latitude:* N *Longitude* W

Media description:

Aliquot #5: *Latitude:* N *Longitude* W

Media description:

STATION ID: HP0180B **SAMPLE ID:** HP0180B-CS

SAMPLE COLLECTION TIME: 1508

Description of sample location (front, back, side yard; vegetable garden; play set; ditch, etc):

Collection: Composite or Grab **MS/MSD?** Y or N

Field Duplicate or Split: *Yes or No* *If yes, indicate* **Duplicate/split sample station ID:**

GPS Coordinates: Trimble [✓] Instrument #: 018165 Logged? Y or N

Aliquot #1: *Latitude:* 33.56554324 N *Longitude* 86.79263699 W

Media description: Brun silt

Aliquot #2 *Latitude:* 33.56544791 N *Longitude* 86.79266405 W

Media description: Brun silt

Aliquot #3: *Latitude:* 33.56550465 N *Longitude* 86.79268463 W

Media description: Brun silt

Aliquot #4: *Latitude:* 33.56547830 N *Longitude* 86.79273428 W

Media description: Brun silt

Aliquot #5: *Latitude:* 33.56556958 N *Longitude* 86.79269696 W

Media description: Brun silt coal & gravel

ADDRESS: (b) (6) PROPERTY ID: FM0123

DATE: 2/6/13 ARRIVAL TIME: 0822

Other pertinent information (weather conditions, etc.):

48°F, Fog

PROPERTY COMMENTS:

Resident Home

Grid for property sketch

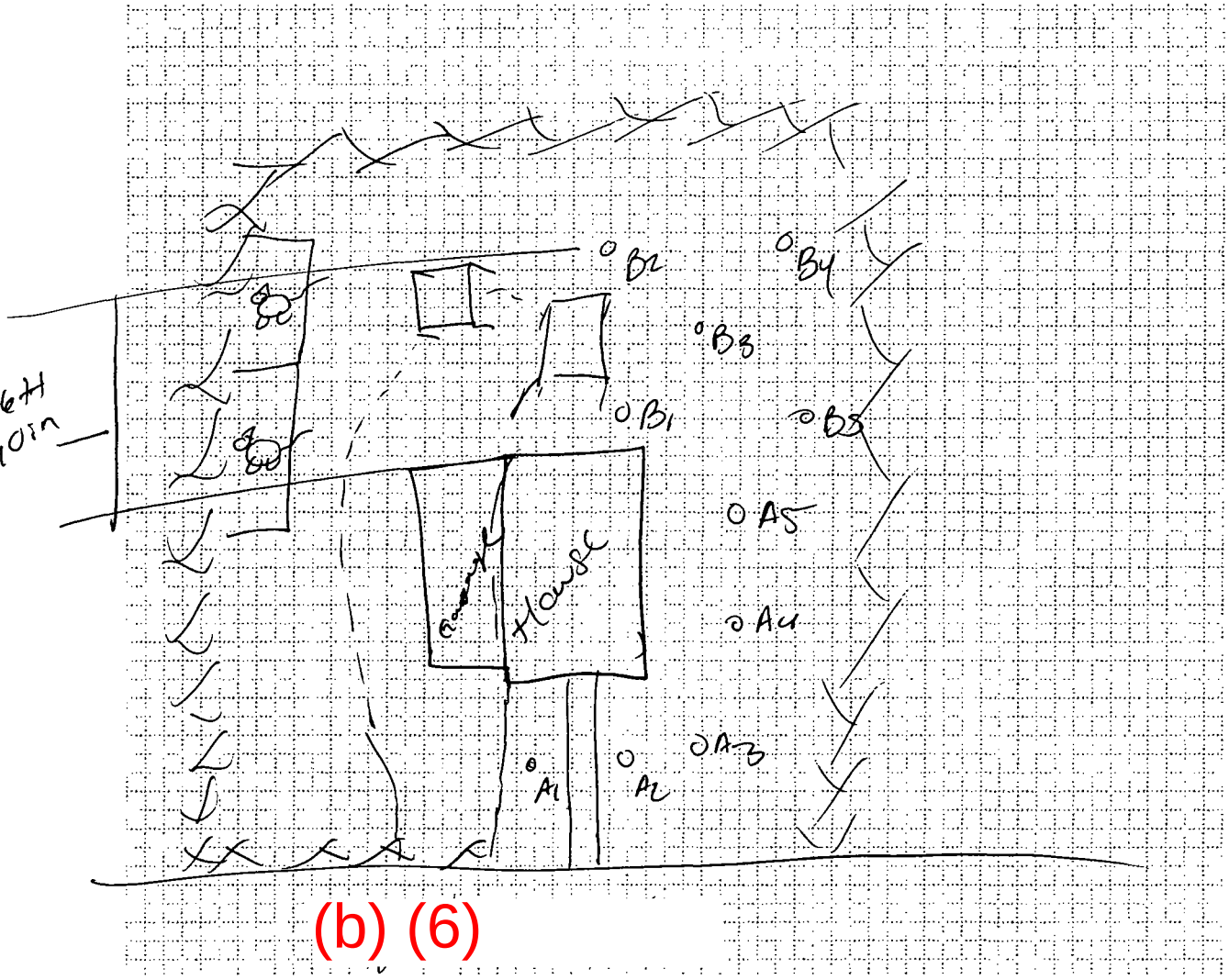

STATION ID: FM0123A SAMPLE ID: FM0123A-CS

SAMPLE COLLECTION TIME: 0834 - 0834

Description of sample location (front, back, side yard; vegetable garden; play set; ditch, etc):

Collection: Composite or Grab MS/MSD? Y or N

Field Duplicate or Split: Yes or No *If yes, indicate* Duplicate/split sample station ID: FM0123A @ 0840

GPS Coordinates: Trimble [✓] Instrument #: 018165 Logged? Y or N

Aliquot #1: *Latitude:* 33.56558271 N *Longitude* 86.80981116 W

Media description: DK brwn silt

Aliquot #2 *Latitude:* 33.56558766 N *Longitude* 86.80973351 W

Media description: DK brwn silt

Aliquot #3: *Latitude:* 33.56560351 N *Longitude* 86.80965173 W

Media description: DK brwn silt

Aliquot #4: *Latitude:* 33.56567097 N *Longitude* 86.80967156 W

Media description: DK brwn silt

Aliquot #5: *Latitude:* 33.56573620 N *Longitude* 86.80970751 W

Media description: DK brwn silt

STATION ID: FM0123B SAMPLE ID: FM0123B-CS

SAMPLE COLLECTION TIME: 0837

Description of sample location (front, back, side yard; vegetable garden; play set; ditch, etc):

Collection: Composite or Grab MS/MSD? Y or N

Field Duplicate or Split: Yes or No *If yes, indicate* Duplicate/split sample station ID:

GPS Coordinates: Trimble [✓] Instrument #: 018165 Logged? Y or N

Aliquot #1: *Latitude:* 33.56577255 N *Longitude* 86.80986811 W

Media description: DK brwn silt

Aliquot #2 *Latitude:* 33.56584281 N *Longitude* 86.~~809~~85377 W

Media description: DK brwn silt

Aliquot #3: *Latitude:* 33.56580893 N *Longitude* 86.80979946 W

Media description: DK brwn silt

Aliquot #4: *Latitude:* 33.56586703 N *Longitude* 86.80976762 W

Media description: DK brwn silt

Aliquot #5: *Latitude:* 33.56578989 N *Longitude* 86.80974844 W

Media description: DK brwn silt

ADDRESS: (b) (6) PROPERTY ID: FM0018

DATE: 2/6/13 ARRIVAL TIME: 0851

Other pertinent information (weather conditions, etc.):

48°F, Fog

PROPERTY COMMENTS:

Resident Home

Grid for property sketch

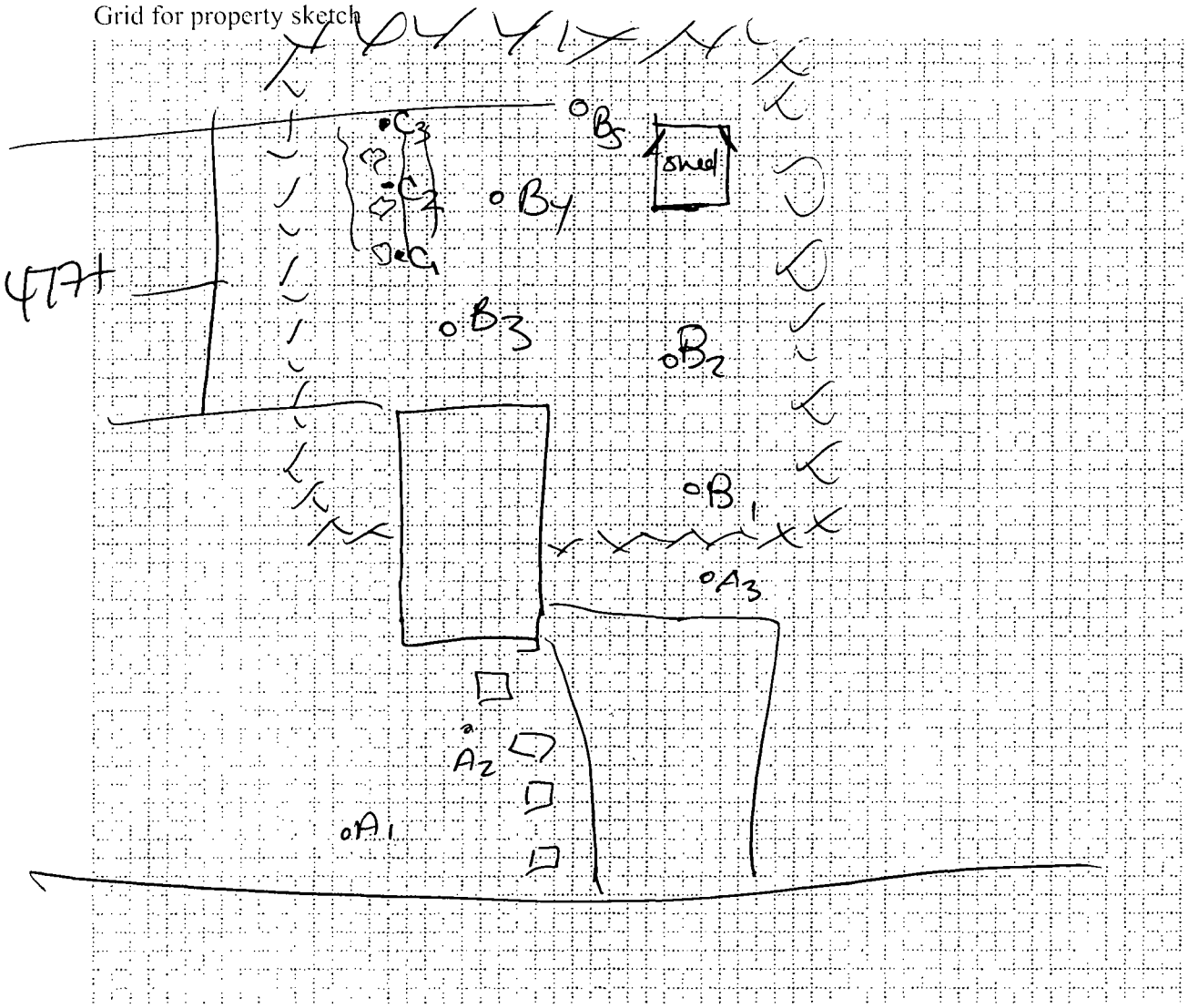

STATION ID: FM0018A **SAMPLE ID:** FM0018A-CS

SAMPLE COLLECTION TIME: 0905

Description of sample location (front, back, side yard; vegetable garden; play set; ditch, etc):

Collection: Composite or Grab **MS/MSD?** Y or N

Field Duplicate or Split: *Yes or No* *If yes, indicate* **Duplicate/split sample station ID:**

GPS Coordinates: Trimble [✓] Instrument #: 0181665 Logged? Y or N

Aliquot #1: *Latitude:* 33.56492577 N *Longitude* 86.81022154 W

Media description: DK brun silt wet

Aliquot #2 *Latitude:* 33.56490407 N *Longitude* 86.81018785 W

Media description: DK brun silt w/ gravel wet

Aliquot #3: *Latitude:* 33.56480969 N *Longitude* 86.81015398 W

Media description: thin layer DK brun silt followed by orange clay wet

Aliquot #4: *Latitude:* N *Longitude* W

Media description:

Aliquot #5: *Latitude:* N *Longitude* W

Media description:

STATION ID: FM0018B **SAMPLE ID:** FM0018B-CS

SAMPLE COLLECTION TIME: 0855

Description of sample location (front, back, side yard; vegetable garden; play set; ditch, etc):

Collection: Composite or Grab **MS/MSD?** Y or N

Field Duplicate or Split: *Yes or No* *If yes, indicate* **Duplicate/split sample station ID:**

GPS Coordinates: Trimble [✓] Instrument #: 0181665 Logged? Y or N

Aliquot #1: *Latitude:* 33.56481091 N *Longitude* 86.81009725 W

Media description: DK brun clay silt

Aliquot #2 *Latitude:* 33.56482610 N *Longitude* 86.81003652 W

Media description: DK brun clay silt

Aliquot #3: *Latitude:* 33.56489039 N *Longitude* 86.56489039 W

Media description: DK brun clay silt

Aliquot #4: *Latitude:* 33.56489004 N *Longitude* 86.80990892 W

Media description: DK brun clay silt

Aliquot #5: *Latitude:* 33.56485622 N *Longitude* 86.80986449 W

Media description: DK brun clay silt

ADDRESS: (b) (6) PROPERTY ID: FM0018

DATE: 2/6/13 ARRIVAL TIME: 0851

Other pertinent information (weather conditions, etc.):

48°F, Fog

PROPERTY COMMENTS:

Resident Home

Grid for property sketch

Refer to page 36

Brittney Brown 2/6/13

STATION ID: FM0018C **SAMPLE ID:** FM0018C-CS

SAMPLE COLLECTION TIME: 0859

Description of sample location (front, back, side yard; vegetable garden; play set; ditch, etc):

Collection: Composite or Grab **MS/MSD?** Y or N

Field Duplicate or Split: *Yes or* No *If yes, indicate* **Duplicate/split sample station ID:**

GPS Coordinates: Trimble [✓] Instrument #: 018165 Logged? Y or N

Aliquot #1: *Latitude:* 33.56489260 N *Longitude* 86.80988595 W

Media description: Brun Silty Clay

Aliquot #2 *Latitude:* 33.56489959 N *Longitude* 86.80985929 W

Media description: Brun Silty Clay

Aliquot #3: *Latitude:* 33.56489977 N *Longitude* 86.80983185 W

Media description: Brun Silty Clay

Aliquot #4: *Latitude:* N *Longitude* W

Media description:

Aliquot #5: *Latitude:* N *Longitude* W

Media description:

STATION ID: **SAMPLE ID:**

SAMPLE COLLECTION TIME:

Description of sample location (front, back, side yard; vegetable garden; play set; ditch, etc):

Collection: Composite or Grab **MS/MSD?** Y or N

Field Duplicate or Split: *Yes or No If yes, indicate* **Duplicate/split sample station ID:**

GPS Coordinates: Trimble [ ] Instrument #: Logged? Y or N

Aliquot #1: *Latitude:* N *Longitude* W

Media description:

Aliquot #2 *Latitude:* N *Longitude* W

Media description:

Aliquot #3: *Latitude:* N *Longitude* W

Media description:

Aliquot #4: *Latitude:* N *Longitude* W

Media description:

Aliquot #5: *Latitude:* N *Longitude* W

Media description:

ADDRESS: (b) (6) PROPERTY ID: FM0153

DATE: 2/6/13 ARRIVAL TIME: 0943

Other pertinent information (weather conditions, etc.):

48°F, sunny

PROPERTY COMMENTS:

Resident Home

Grid for property sketch

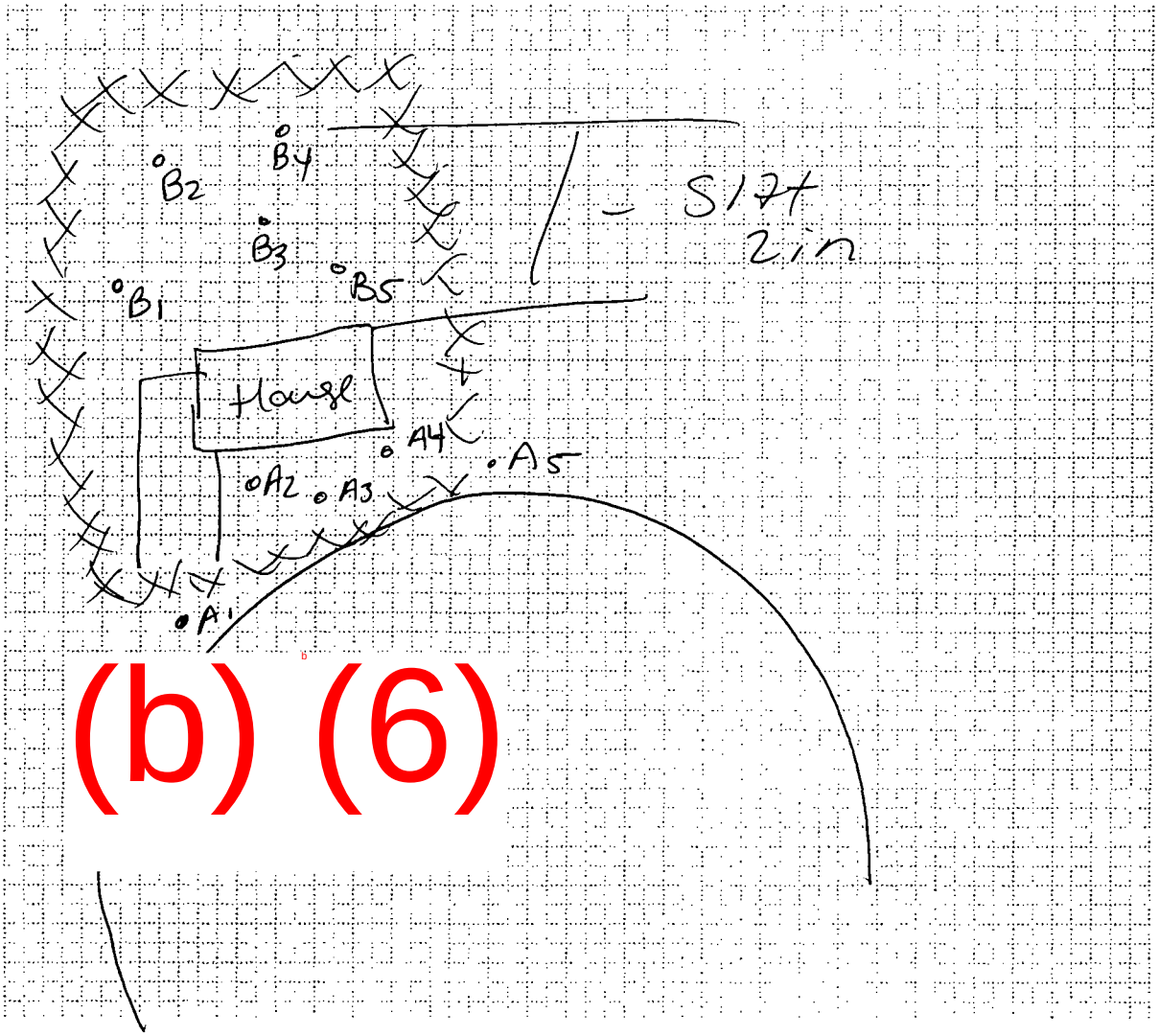

STATION ID: FM0153A **SAMPLE ID:** FM0153A-CS

SAMPLE COLLECTION TIME: 1002

Description of sample location (front, back, side yard; vegetable garden; play set; ditch, etc):

Collection: Composite or Grab **MS/MSD?** Y or N

Field Duplicate or Split: *Yes or No* *If yes, indicate* **Duplicate/split sample station ID:**

GPS Coordinates: Trimble [✓] Instrument #: 018165 Logged? Y or N

Aliquot #1: *Latitude:* 33.56775893 N *Longitude* 86.81035551 W

Media description: Brun Silt w/ orange clay/ dry

Aliquot #2 *Latitude:* 33.56778896 N *Longitude* 86.81032441 W

Media description: Same as previous

Aliquot #3: *Latitude:* 33.56777723 N *Longitude* 86.81031108 W

Media description: same as previous

Aliquot #4: *Latitude:* 33.56774730 N *Longitude* 86.81026358 W

Media description: same as previous

Aliquot #5: *Latitude:* ~~33.56771890~~ ~~N *Longitude*~~ BB 86.810 3312 W

Media description: ~~Same as previous~~

STATION ID: FM0153B **SAMPLE ID:** FM0153B-CS

SAMPLE COLLECTION TIME: 0956

Description of sample location (front, back, side yard; vegetable garden; play set; ditch, etc):

Collection: Composite or Grab **MS/MSD?** Y or N

Field Duplicate or Split: *Yes or No* *If yes, indicate* **Duplicate/split sample station ID:**

GPS Coordinates: Trimble [✓] Instrument #: 018165 Logged? Y or N

Aliquot #1: *Latitude:* 33.56792707 N *Longitude* 86.81028216 W

Media description: tan/orange silty

Aliquot #2 *Latitude:* 33.56801855 N *Longitude* 86.81023524 W

Media description: tan/orange silty clay

Aliquot #3: *Latitude:* 33.56792466 N *Longitude* 86.81018896 W

Media description: ~~DK brun silt moist~~ tan/orange silty clay BB 2/6/13

Aliquot #4: *Latitude:* 33.56802976 N *Longitude* 86.81016687 W

Media description: DK brun silt moist

Aliquot #5: *Latitude:* 33.56789084 N *Longitude* 86.81012904 W

Media description: DK brun silt moist

ADDRESS (b) (6) PROPERTY ID: FM0034

DATE: 2/6/13 ARRIVAL TIME: 1010

Other pertinent information (weather conditions, etc.):

50°F, sunny

PROPERTY COMMENTS:

Resident Home

Grid for property sketch

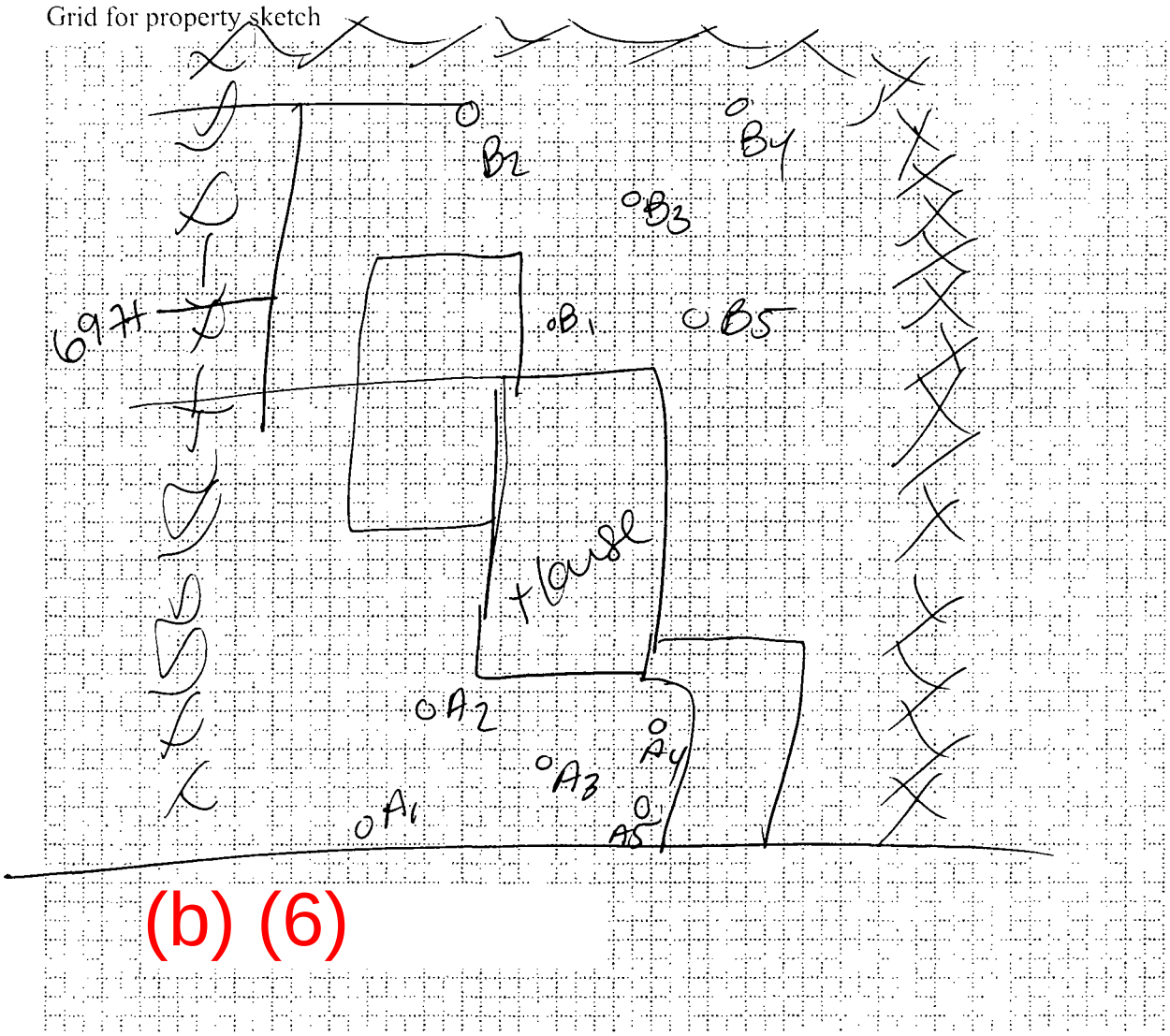

STATION ID: FM0034A **SAMPLE ID:** FM0034A-CS

SAMPLE COLLECTION TIME: 1020

Description of sample location (front, back, side yard; vegetable garden; play set; ditch, etc):

Collection: Composite or Grab **MS/MSD?** Y or N

Field Duplicate or Split: *Yes or No* ***If yes, indicate*** **Duplicate/split sample station ID:**

GPS Coordinates: Trimble [✓] Instrument #: 018165 Logged? Y or N

Aliquot #1: *Latitude:* 33.56724869 N *Longitude* 86.81058018 W

Media description: Brun silt w/ small gravel

Aliquot #2 *Latitude:* 33.56724284 N *Longitude* 86.81064244 W

Media description: Brun silt w/ small gravel

Aliquot #3: *Latitude:* 33.56728211 N *Longitude* 86.81060837 W

Media description: Brun/tan clay silt

Aliquot #4: *Latitude:* 33.56731548 N *Longitude* 86.81061837 W

Media description: Brun silt

Aliquot #5: *Latitude:* 33.56732069 N *Longitude* 86.81057061 W

Media description: Brun silt

STATION ID: FM0034B **SAMPLE ID:** FM0034B-CS

SAMPLE COLLECTION TIME: 1024

Description of sample location (front, back, side yard; vegetable garden; play set; ditch, etc):

Collection: Composite or Grab **MS/MSD?** Y or N

Field Duplicate or Split: *Yes or No* ***If yes, indicate*** **Duplicate/split sample station ID:**

GPS Coordinates: Trimble [✓] Instrument #: 018165 Logged? Y or N

Aliquot #1: *Latitude:* 33.56724181 N *Longitude* 86.81084299 W

Media description: Brun clay silt

Aliquot #2 *Latitude:* 33.56726014 N *Longitude* 86.81097248 W

Media description: Brun clay silt

Aliquot #3: *Latitude:* 33.56729312 N *Longitude* 86.81091820 W

Media description: Brun clay silt

Aliquot #4: *Latitude:* 33.56732854 N *Longitude* 86.81098555 W

Media description: Brun clay silt

Aliquot #5: *Latitude:* 33.56733026 N *Longitude* 86.81087398 W

Media description: Brun clay silt

ADDRESS: (b) (6) PROPERTY ID: FM0138

DATE: 2/6/13 ARRIVAL TIME: 1034

Other pertinent information (weather conditions, etc.):

50°F, Sunny

PROPERTY COMMENTS:

Vacant lot

Grid for property sketch

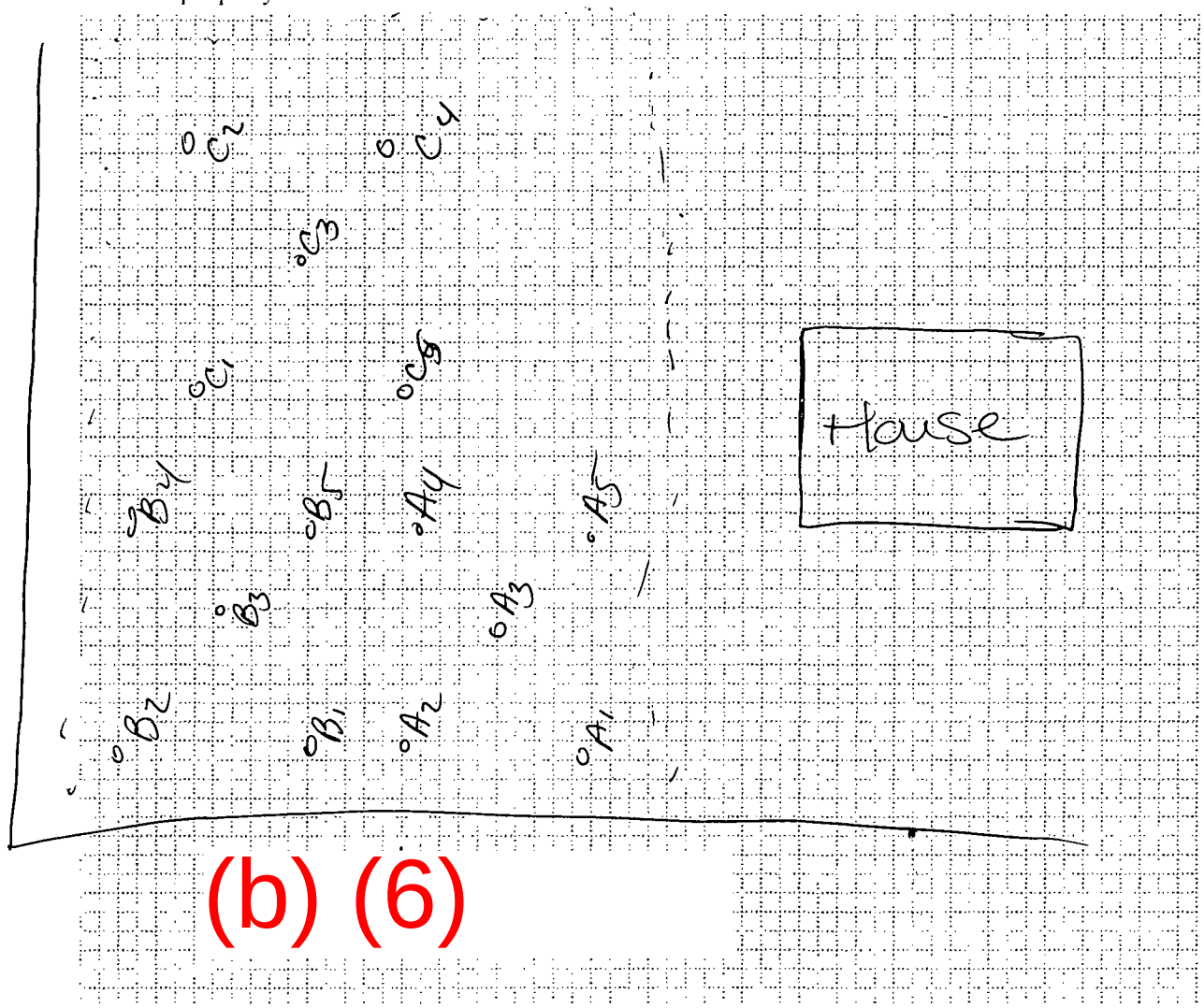

STATION ID: FM0138A **SAMPLE ID:** FM0138A-CS

SAMPLE COLLECTION TIME: 1040

Description of sample location (front, back, side yard; vegetable garden; play set; ditch, etc):

Collection: Composite or Grab **MS/MSD?** Y or N

Field Duplicate or Split: *Yes or* No *If yes, indicate* **Duplicate/split sample station ID:**

GPS Coordinates: Trimble [✓] Instrument #: 018165 Logged? Y or N

Aliquot #1: *Latitude:* 33.56640128 N *Longitude* 86.80954579 W

Media description: tan/brun fine sand

Aliquot #2 *Latitude:* 33.56629157 N *Longitude* 86.80952600 W

Media description: tan/brun fine sand

Aliquot #3: *Latitude:* 33.56631997 N *Longitude* 86.80958722 W

Media description: tan/brun fine sand

Aliquot #4: *Latitude:* 33.56625439 N *Longitude* 86.80962948 W

Media description: tan/brun fine sand

Aliquot #5: *Latitude:* 33.56636747 N *Longitude* 86.80967778 W

Media description: Brun sandy silt

STATION ID: FM0138B **SAMPLE ID:** FM0138B-CS

SAMPLE COLLECTION TIME: 1043

Description of sample location (front, back, side yard; vegetable garden; play set; ditch, etc):

Collection: Composite or Grab **MS/MSD?** Y or N

Field Duplicate or Split: *Yes or* No *If yes, indicate* **Duplicate/split sample station ID:**

GPS Coordinates: Trimble [✓] Instrument #: 018165 Logged? Y or N

Aliquot #1: *Latitude:* 33.56642475 N *Longitude* 86.80936860 W

Media description: Brun sandy silt to fine sand

Aliquot #2 *Latitude:* 33.56630620 N *Longitude* 86.80937835 W

Media description: Brun sandy silt to fine sand

Aliquot #3: *Latitude:* 33.56635485 N *Longitude* 86.80943081 W

Media description: Brun sandy silt to fine sand

Aliquot #4: *Latitude:* 33.56629999 N *Longitude* 86.80946744 W

Media description: Brun sandy silt to fine sand

Aliquot #5: *Latitude:* 33.56640620 N *Longitude* 86.80949352 W

Media description: Brun sandy silt to fine sand

ADDRESS: (b) (6)

PROPERTY ID: FM0138

DATE: 2/6/13

ARRIVAL TIME: 1034

Other pertinent information (weather conditions, etc.):

50°F, sunny

PROPERTY COMMENTS:

Vacant lot

Grid for property sketch

Refer to page 44

Brittney Brown

2/6/13

STATION ID: FM0138C **SAMPLE ID:** FM0138C-CS

SAMPLE COLLECTION TIME: 1045

Description of sample location (front, back, side yard; vegetable garden; play set; ditch, etc):

Collection: Composite or Grab **MS/MSD?** Y or N

Field Duplicate or Split: *Yes or* N *If yes, indicate* **Duplicate/split sample station ID:**

GPS Coordinates: Trimble [✓] Instrument #: 018165 Logged? Y or N

Aliquot #1: *Latitude:* 33.56624792 N *Longitude* 86.80941334 W

Media description: brwn fine sand

Aliquot #2 *Latitude:* 33.56616604 N *Longitude* 86.80941201 W

Media description: brwn fine sand

Aliquot #3: *Latitude:* 33.56620196 N *Longitude* 86.80944880 W

Media description: brwn fine sand

Aliquot #4: *Latitude:* 33.56617110 N *Longitude* 86.80951375 W

Media description: brwn fine sand

Aliquot #5: *Latitude:* 33.56623805 N *Longitude* 86.80953348 W

Media description: brwn fine sand

STATION ID: **SAMPLE ID:**

SAMPLE COLLECTION TIME:

Description of sample location (front, back, side yard; vegetable garden; play set; ditch, etc):

Collection: Composite or Grab **MS/MSD?** Y or N

Field Duplicate or Split: *Yes or No* *If yes, indicate* **Duplicate/split sample station ID:**

GPS Coordinates: Trimble [ ] Instrument #: Logged? Y or N

Aliquot #1: *Latitude:* N *Longitude* W

Media description:

Aliquot #2 *Latitude:* N *Longitude* W

Media description:

Aliquot #3: *Latitude:* N *Longitude* W

Media description:

Aliquot #4: *Latitude:* N *Longitude* W

Media description:

Aliquot #5: *Latitude:* N *Longitude* W

Media description:

ADDRESS: (b) (6)

PROPERTY ID: FM0139

DATE: 2/6/13

ARRIVAL TIME: 1109

Other pertinent information (weather conditions, etc.):

52°F, sunny

PROPERTY COMMENTS:

Resident Home

Grid for property sketch

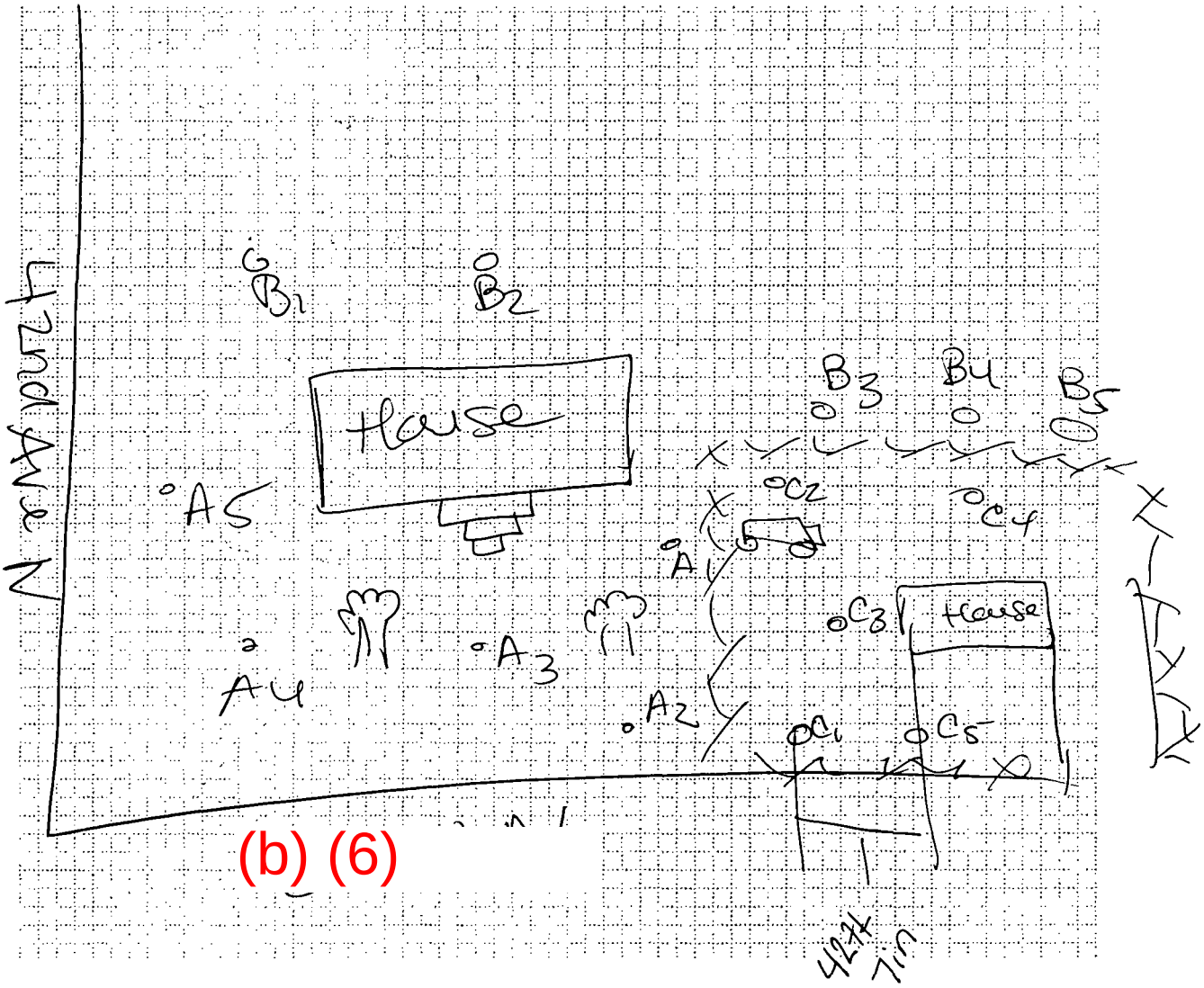

STATION ID: FM0139A **SAMPLE ID:** FM0139A-CS

SAMPLE COLLECTION TIME: 1124

Description of sample location (front, back, side yard; vegetable garden; play set; ditch, etc):

Collection: Composite or Grab **MS/MSD?** Y or N

Field Duplicate or Split: *Yes or* No *If yes, indicate* **Duplicate/split sample station ID:**

GPS Coordinates: Trimble [✓] Instrument #: 018165 Logged? Y or N

Aliquot #1: *Latitude:* 33.56685032 N *Longitude* 86.80951579 W

Media description: Brun silt clay

Aliquot #2 *Latitude:* ~~33.56692279~~ 33.56673097 N *Longitude* ~~86.80949607~~ 86.80940232 W

Media description: Brun silt clay

Aliquot #3: *Latitude:* ~~33.56692405~~ 33.56674371 N *Longitude* ~~86.80940599~~ 86.80947618 W

Media description: Brun silt clay w/ small coal fragment

Aliquot #4: *Latitude:* 33.56666515 N *Longitude* 86.80947326 W

Media description: Brun silt clay

Aliquot #5: *Latitude:* 33.56662897 N *Longitude* 86.80955937 W

Media description: Brun silt clay

STATION ID: FM0139B **SAMPLE ID:** FM0139B-CS

SAMPLE COLLECTION TIME: 1130

Description of sample location (front, back, side yard; vegetable garden; play set; ditch, etc):

Collection: Composite or Grab **MS/MSD?** Y or N

Field Duplicate or Split: *Yes or* No *If yes, indicate* **Duplicate/split sample station ID:**

GPS Coordinates: Trimble [✓] Instrument #: 018165 Logged? Y or N

Aliquot #1: *Latitude:* 33.56672866 N *Longitude* 86.80970229 W

Media description: Brun silt w/ gravel

Aliquot #2 *Latitude:* 33.56682717 N *Longitude* 86.80971129 W

Media description: Brun silt w/ gravel

Aliquot #3: *Latitude:* 33.56693291 N *Longitude* 86.80962691 W

Media description: Brun clay silt

Aliquot #4: *Latitude:* 33.56699400 N *Longitude* 86.80959843 W

Media description: Brun/orange silty clay

Aliquot #5: *Latitude:* 33.56706195 N *Longitude* 86.80958376 W

Media description: DK brun silt w/ small coal fragments

ADDRESS: (b) (6) PROPERTY ID: FM0139

DATE: 2/6/13 ARRIVAL TIME: 1109

Other pertinent information (weather conditions, etc.):

52°F, sunny

PROPERTY COMMENTS:

2nd Residence on same parcel

w/ different ~~dif~~ address

2/6/13

(b) (6)

Grid for property sketch

Refer to page 48

Brittney Brown

2/6/13

STATION ID: FM0139C-~~CS~~ **SAMPLE ID:** FM0139C-CS

SAMPLE COLLECTION TIME: 1135

Description of sample location (front, back, side yard; vegetable garden; play set; ditch, etc):

Collection: Composite or Grab **MS/MSD?** Y or N

Field Duplicate or Split: *Yes or No* *If yes, indicate* **Duplicate/split sample station ID:**

GPS Coordinates: Trimble [~~4~~ Instrument #: 018165 Logged? Y or N

Aliquot #1: *Latitude:* 33.56688228 N *Longitude* 86.80935909 W

Media description: Brwn Silt

Aliquot #2 *Latitude:* 33.56692279 N *Longitude* 86.80949602 W

Media description: Brwn Silt

Aliquot #3: *Latitude:* 33.56692405 N *Longitude* 86.80940599 W

Media description: Brwn silt

Aliquot #4: *Latitude:* 33.56702662 N *Longitude* 86.80953094 W

Media description: Dk brwn/blk w/ coal + gravel

Aliquot #5: *Latitude:* 33.56697002 N *Longitude* 86.80934244 W

Media description: Brwn/orange Silty clay

STATION ID: **SAMPLE ID:**

SAMPLE COLLECTION TIME:

Description of sample location (front, back, side yard; vegetable garden; play set; ditch, etc):

Collection: Composite or Grab **MS/MSD?** Y or N

Field Duplicate or Split: *Yes or No* *If yes, indicate* **Duplicate/split sample station ID:**

GPS Coordinates: Trimble [ ] Instrument #: Logged? Y or N

Aliquot #1: *Latitude:* N *Longitude* W

Media description:

Aliquot #2 *Latitude:* N *Longitude* W

Media description:

Aliquot #3: *Latitude:* N *Longitude* W

Media description:

Aliquot #4: *Latitude:* N *Longitude* W

Media description:

Aliquot #5: *Latitude:* N *Longitude* W

Media description:

ADDRESS: _____ **PROPERTY ID:** _____

DATE: _____ **ARRIVAL TIME:** _____

Other pertinent information (weather conditions, etc.):

_____

PROPERTY COMMENTS:

_____

_____

_____

_____

Grid for property sketch

The remaining pages in this logbook are blank and have not been scanned.