REDACTED

LB 0000 59

United States Environmental Protection Agency
Region 4

OTIE
Oneida Total Integrated Enterprises

UNITED STATES ENVIRONMENTAL PROTECTION AGENCY

35TH AVENUE REMOVAL INVESTIGATION
BIRMINGHAM, ALABAMA
JEFF CROWLEY, ON-SCENE COORDINATOR

FIELD SAMPLING LOGBOOK

Book 2 **of** 2

Inclusive Dates: Week of 3/4/13

List of Sampling Team in logbook:

Name	Initials	Organization/Duties
(b) (6)		OTIE ,Team Leader
		URS

THIS PAGE LEFT INTENTIONALLY BLANK

Sampling Procedures and Methodology

Unless specified elsewhere in this logbook, all soil samples will be collected in accordance with the EPA Science and Ecosystem Division (SESD) Field Branches Quality System and Technical Procedures (FBQSTP) Soil Sampling (SESDPROC-300-R2) based on the following design.

The total number of 5-point composite surface soil samples (0-4 inches below ground surface) to be collected from each property will be based on the lot size as follows:

- For residential properties with a total parcel lot size equal to or less than (≤) 5,000 square feet - the front yard and back yards of each property. If the property has a substantial side yard (primarily corner lots), then one composite soil sample may also be collected from the side yard. Aliquots will be collected away from influences with drip lines and burn areas in a five dice configuration (each of the four corners and the center).
- For residential properties with a total parcel lot size greater than (>) 5,000 square feet and ≤ ¼-acre - the property should be divided into two roughly equal surface areas. If the property has a substantial side yard (primarily corner lots), then one composite soil sample may be collected from the side yard with the remainder of the property being divided into two roughly equal surface areas. Aliquots will be collected away from influences including drip lines and burn areas with reasonably equal spacing between aliquots.
- Residential properties over ¼-acre in parcel lot size will be divided into ¼-acre sections. When dividing any such property with a substantial side yard (primarily corner lots), one composite soil sample may be collected from the side yard. Aliquots will be collected away from influences including drip lines and burn areas in a five dice configuration, if possible, with reasonably equal spacing between aliquots.

Grab surface soil samples will be collected from apparent exposure pathways where active play sets are located.

Three-point composite surface soil samples will be collected from distinct vegetable gardens from each residential property.

Samples shall not be collected under paved areas or under stationary fixed structures.

Grab sediment samples will be collected in accordance with EPA SESD FBSTP Sediment Sampling (SESDPROC-200-R2) from any surface water drainage pathways located on individual properties, as directed by the OSC, and in and along the banks of the 34th Street North Ditch.

Each surface soil or sediment sample should be homogenized in a stainless steel bowl. One 8-ounce jar will be filled and the remaining sample material will be placed in zip-top bags for screening. Information identifying the location, sample, and date/time will be inscribed on each jar and zip-top bag.

All sample bags will be screened for metals in accordance with SESD FBQSTP Field XRF Measurement (SESDPROC-107-R2) using a Niton XRF. The sample will be dried before sieving or analysis is performed. Once the sample has dried, the sample will be divided into two subsamples; one subsample will be sieved through a #10 screen (2 mm) and the other will be left unsieved. Once separated into sieved and unsieved samples, the zip-top bag will be compressed by folding over the excess plastic and removing as much air and space from the sample as possible. The XRF will be placed directly on the exterior of the compressed sample in the plastic zip-top bag to measure metals concentrations. Following XRF screening, the unsieved portion of the sample material will be containerized into one 8-ounce jars and the sieved portion of the sample will be containerized into another 8-ounce jar.

THIS PAGE LEFT INTENTIONALLY BLANK

Based on the site DQOs the 8-ounce jars of surface soil and sediment samples should be submitted to PEL, Tampa, Florida (a NELAC certified laboratory) for low level PAH, and/or TCL SVOC, RCRA metals, PCB, and/or Hexavalent Chromium analysis. RCRA metals will be analyzed from both the sieved and unsieved portions of the sample. All other analysis will be conducted on the unsieved portion.

The location of each aliquot will also be logged in accordance with SESD FBQSTP Global Positioning System (SESDPROC- 110-R3) using a Trimble GPS.

A description of the color and texture of the aliquot material will be recorded in each box.

The ***station ID*** for each location will consist of seven characters, beginning with the six digit Property ID designation for the property followed by a alphabetic letter beginning with "A".

e.g. CV0001A would be the station ID for the front yard 5-pt composite sample collected at the property with Property ID CV0001.

The ***sample ID*** for each sample is the station ID with "CS" (composite soil), "GS" (grab soil), "SD" (sediment), or "SW" (surface water) appended, therefore, the sample ID for this sample would be CV0001A-CS. Co-located duplicates will be designated by appending a "D" to the end of the sample ID. Pan splits will be identified by appending an "SP" to the end of the sample ID.

ADDRESS: (b) (6) PROPERTY ID: CV0853

DATE: 3/7/13 ARRIVAL TIME: 1045

Other pertinent information (weather conditions, etc.):

39° Cold.

PROPERTY COMMENTS:

Grid for property sketch

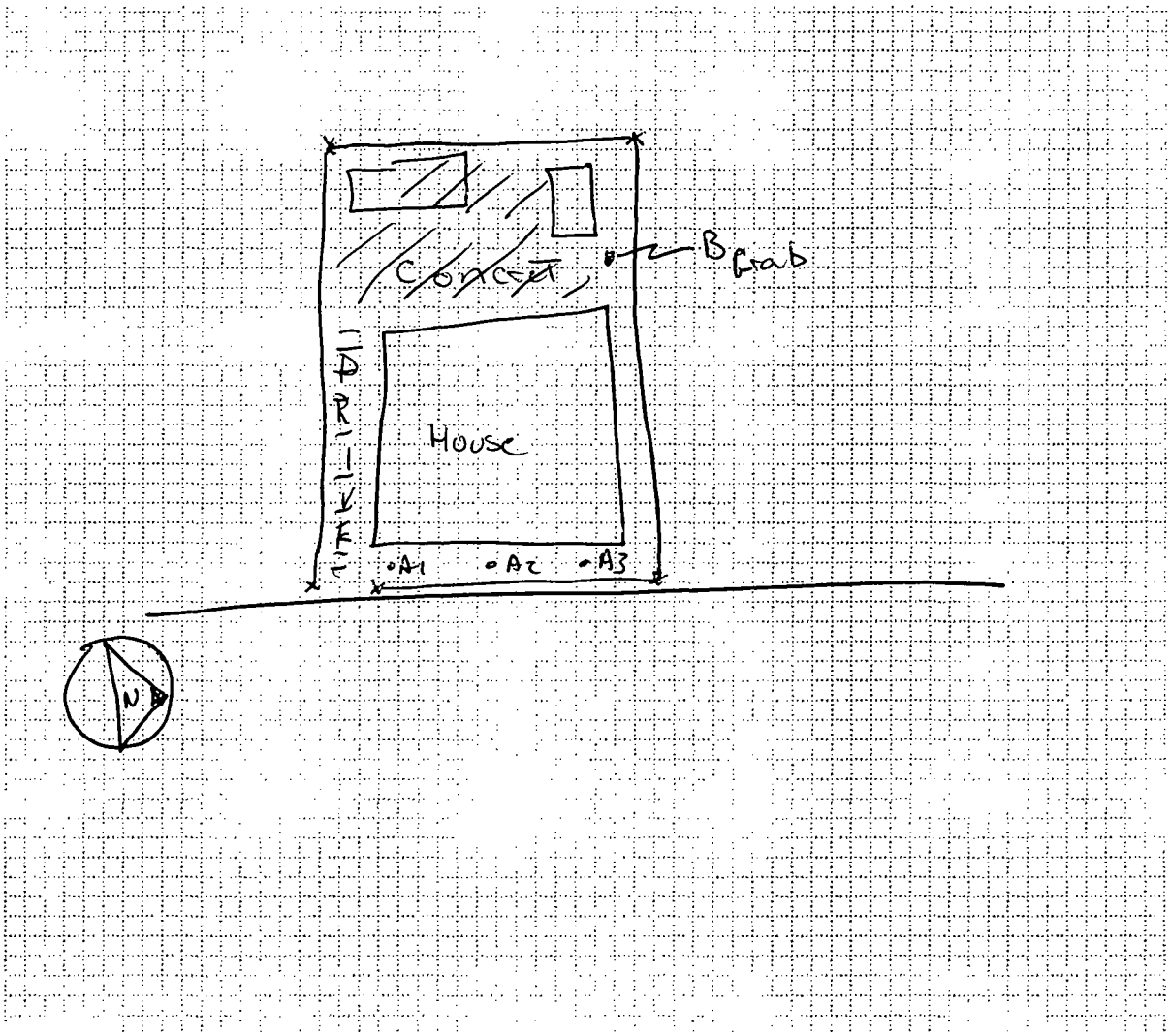

STATION ID: CV0853 **SAMPLE ID:** CV0853A-CS

SAMPLE COLLECTION TIME: 1055

Description of sample location (front, back, side yard; vegetable garden; play set; ditch, etc):

Front yard.

Collection: Composite or Grab **MS/MSD?** Y or N

Field Duplicate or Split: *Yes or* No *If yes, indicate* **Duplicate/split sample station ID:**

GPS Coordinates: Trimble [✓] Instrument #: 020168 Logged? Y or N

Aliquot #1: *Latitude:* 33.553122221 N *Longitude* 86.79992919 W

Media description: Brown silty soil

Aliquot #2 *Latitude:* 33.55315226 N *Longitude* 86.79990046 W

Media description: Brown silty soil

Aliquot #3: *Latitude:* 33.55318012 N *Longitude* 86.79993136 W

Media description: Brown silty soil

Aliquot #4: *Latitude:* N *Longitude* W

Media description:

Aliquot #5: *Latitude:* N *Longitude* W

Media description:

STATION ID: CV0853 **SAMPLE ID:** CV0853B-G

SAMPLE COLLECTION TIME: 1105

Description of sample location (front, back, side yard; vegetable garden; play set; ditch, etc):

Back yard/Area

Collection: Composite or Grab **MS/MSD?** Y or N

Field Duplicate or Split: *Yes or* No *If yes, indicate* **Duplicate/split sample station ID:**

GPS Coordinates: Trimble [✓] Instrument #: 020168 Logged? Y or N

Aliquot #1: *Latitude:* 33.55319584 N *Longitude* 86.80015279 W

Media description: Dark Brown Sandy Clay

Aliquot #2 *Latitude:* N *Longitude* W

Media description:

Aliquot #3: *Latitude:* N *Longitude* W

Media description:

Aliquot #4: *Latitude:* N *Longitude* W

Media description:

Aliquot #5: *Latitude:* N *Longitude* W

Media description:

ADDRESS: (b) (6) PROPERTY ID: CU0207

DATE: 3/7/13 ARRIVAL TIME: 1215

Other pertinent information (weather conditions, etc.):

52° cool

PROPERTY COMMENTS:

Grid for property sketch

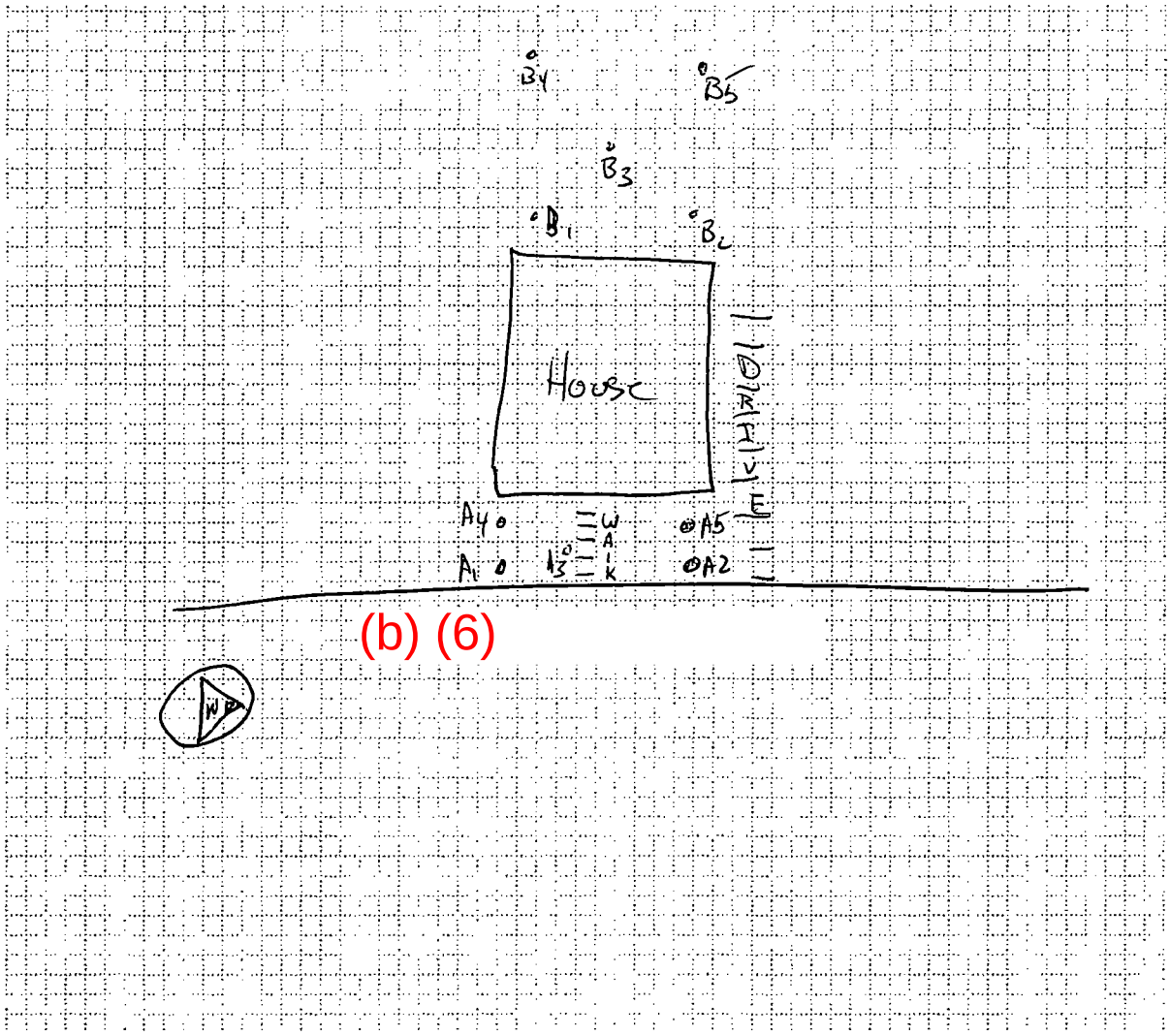

STATION ID: CV0207 **SAMPLE ID:** CV0207A-CS

SAMPLE COLLECTION TIME: 1230

Description of sample location (front, back, side yard; vegetable garden; play set; ditch, etc):
Front yard.

Collection: Composite or Grab **MS/MSD?** Y or N

Field Duplicate or Split: Yes or No *If yes, indicate* **Duplicate/split sample station ID:** CV0207A-CS-D

GPS Coordinates: Trimble [✓] Instrument #: 020186 Logged? Y or N

Aliquot #1: *Latitude:* 33.55465824 N *Longitude* 86.80174904 W
Media description: Medium brown silty clay, with coal fragments

Aliquot #2 *Latitude:* 33.55473822 N *Longitude* 86.80174993 W
Media description: Dark brown silty clay, with slag

Aliquot #3: *Latitude:* 33.55468752 N *Longitude* 86.80178339 W
Media description: Dark brown silty clay

Aliquot #4: *Latitude:* 33.55466194 N *Longitude* 86.80179149 W
Media description: Same as A1

Aliquot #5: *Latitude:* 33.55473416 N *Longitude* 86.80179384 W
Media description: Same as A3.

STATION ID: CV0207 **SAMPLE ID:** CV0207B-CS

SAMPLE COLLECTION TIME: 1240

Description of sample location (front, back, side yard; vegetable garden; play set; ditch, etc):
Back yard.

Collection: Composite or Grab **MS/MSD?** Y or N

Field Duplicate or Split: Yes or No *If yes, indicate* **Duplicate/split sample station ID:**

GPS Coordinates: Trimble [✓] Instrument #: 020186 Logged? Y or N

Aliquot #1: *Latitude:* 33.55466944 N *Longitude* 86.80200707 W
Media description: Dark Brown clay

Aliquot #2 *Latitude:* 33.55474591 N *Longitude* 86.80201705 W
Media description: Dark Brown clay w/coal

Aliquot #3: *Latitude:* 33.55470623 N *Longitude* 86.80208732 W
Media description: Dark Brown clay

Aliquot #4: *Latitude:* 33.55466502 N *Longitude* 86.80217189 W
Media description: Dark Brown clay

Aliquot #5: *Latitude:* 33.55475364 N *Longitude* 86.80218018 W
Media description: Dark Brown clay

ADDRESS: (b) (6) PROPERTY ID: CV0252

DATE: 3/7/13 ARRIVAL TIME: 1245

Other pertinent information (weather conditions, etc.):

51° Sunny

PROPERTY COMMENTS:

Grid for property sketch

(b) (6)

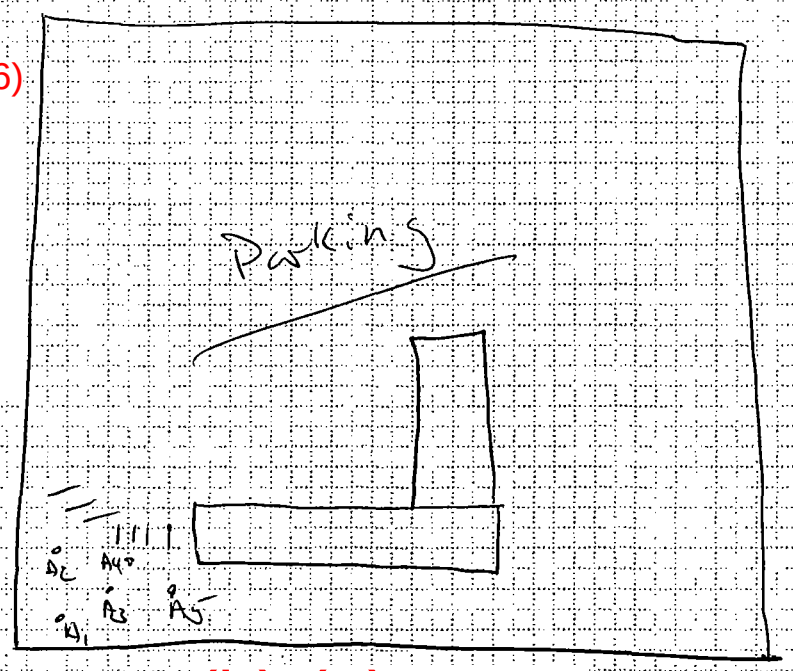

(b) (6)

STATION ID: CV0252 **SAMPLE ID:** CV0252A-CS

SAMPLE COLLECTION TIME: 1300

Description of sample location (front, back, side yard; vegetable garden; play set; ditch, etc):

only grassy area

Collection: (Composite) or Grab **MS/MSD?** Y or (N)

Field Duplicate or Split: *Yes or* (No) ***If yes, indicate*** **Duplicate/split sample station ID:** _____

GPS Coordinates: Trimble [✓] Instrument #: 020168 Logged? Y or N

Aliquot #1: *Latitude:* 33.55560220 N *Longitude* 86.80271261 W

Media description: Dark Brown silty clay

Aliquot #2 *Latitude:* Dark silty clay N *Longitude* 86.80270856 W

Media description: 33.5555605 with ~~Coal~~ Slag

Aliquot #3: *Latitude:* 33.55557631 N *Longitude* 86.80269613 W

Media description: Same as A1

Aliquot #4: *Latitude:* 33.55560568 N *Longitude* 86.80265111 W

Media description: Same as A1

Aliquot #5: *Latitude:* 33.55558035 N *Longitude* 86.80263299 W

Media description: Dark silty clay with Slag

STATION ID: _____ **SAMPLE ID:** _____

SAMPLE COLLECTION TIME: _____

Description of sample location (front, back, side yard; vegetable garden; play set; ditch, etc):

_____

Collection: Composite or Grab **MS/MSD?** Y or N

Field Duplicate or Split: *Yes or No* ***If yes, indicate*** **Duplicate/split sample station ID:** _____

GPS Coordinates: Trimble [ ] Instrument #: _____ Logged? Y or N

Aliquot #1: *Latitude:* _____ N *Longitude* _____ W

Media description: _____

Aliquot #2 *Latitude:* _____ N *Longitude* _____ W

Media description: _____

Aliquot #3: *Latitude:* _____ N *Longitude* _____ W

Media description: _____

Aliquot #4: *Latitude:* _____ N *Longitude* _____ W

Media description: _____

Aliquot #5: *Latitude:* _____ N *Longitude* _____ W

Media description: _____

ADDRESS: (b) (6) PROPERTY ID: CV0473

DATE: 3/7/13 ARRIVAL TIME: 1310

Other pertinent information (weather conditions, etc.):

50° Sunny

PROPERTY COMMENTS:

Had to sample Back First Because of Dog

Grid for property sketch

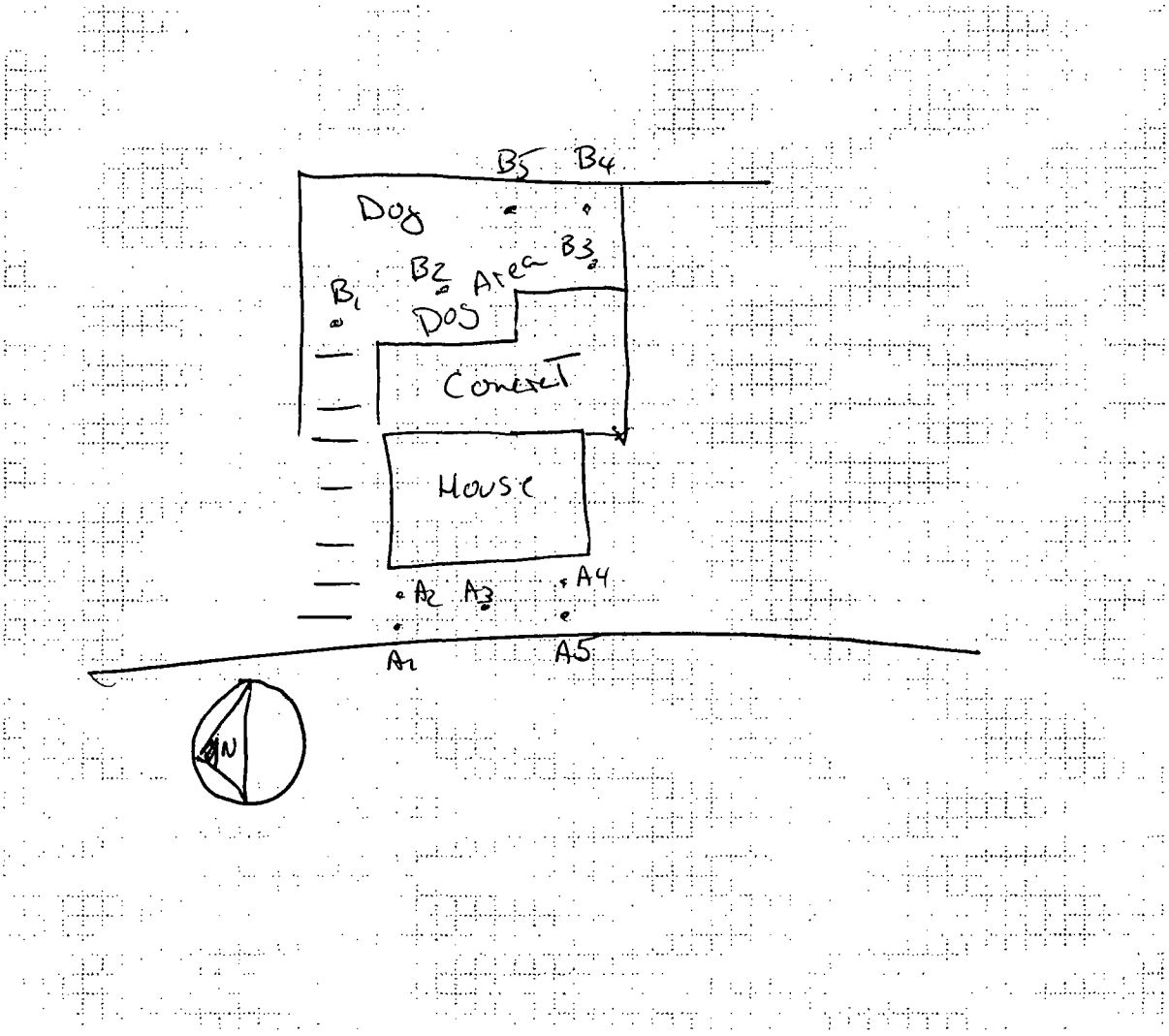

STATION ID: CV0473 **SAMPLE ID:** CV0473B

SAMPLE COLLECTION TIME: 1320

Description of sample location (front, back, side yard; vegetable garden; play set; ditch, etc):

Back yard.

Collection: Composite or Grab **MS/MSD?** Y or N

Field Duplicate or Split: *Yes or No If yes, indicate* **Duplicate/split sample station ID:**

GPS Coordinates: Trimble [✓] Instrument #: 020168 Logged? Y or N

Aliquot #1: *Latitude:* 33.55713475 N *Longitude* 86.80012093 W

Media description: Light clay soil gravel

Aliquot #2 *Latitude:* 33.55709034 N *Longitude* 86.80008722 W

Media description: Dark sandy silt

Aliquot #3: *Latitude:* 33.55705208 N *Longitude* 86.80006544 W

Media description: Dark sandy silt

Aliquot #4: *Latitude:* 33.55704947 N *Longitude* 86.80003541 W

Media description: Dark sandy silt

Aliquot #5: *Latitude:* ~~Dark sandy~~ 33.55706808 N *Longitude* 86.80004711 W

Media description: Dark sandy clay

STATION ID: CV0473 **SAMPLE ID:** CV0473A

SAMPLE COLLECTION TIME: 1330

Description of sample location (front, back, side yard; vegetable garden; play set; ditch, etc):

Frontyard.

Collection: Composite or Grab **MS/MSD?** Y or N

Field Duplicate or Split: *Yes or No If yes, indicate* **Duplicate/split sample station ID:**

GPS Coordinates: Trimble [✓] Instrument #: 020188 Logged? Y or N

Aliquot #1: *Latitude:* 33.55711060 N *Longitude* 86.80041089 W

Media description: Dark Brown silty Clay

Aliquot #2 *Latitude:* 33.55710264 N *Longitude* 86.80045304 W

Media description: Dark Brown silty clay

Aliquot #3: *Latitude:* 33.55708139 N *Longitude* 86.80043418 W

Media description: Same as A5

Aliquot #4: *Latitude:* 33.55705362 N *Longitude* 86.80040585 W

Media description: Same as A5

Aliquot #5: *Latitude:* 33.55704157 N *Longitude* 86.80046361 W

Media description: Gray / Dark Brown Clay

ADDRESS: (b) (6) PROPERTY ID: CU0457

DATE: 3/7/13 ARRIVAL TIME: 1350

Other pertinent information (weather conditions, etc.):

55° cool

PROPERTY COMMENTS:

Grid for property sketch

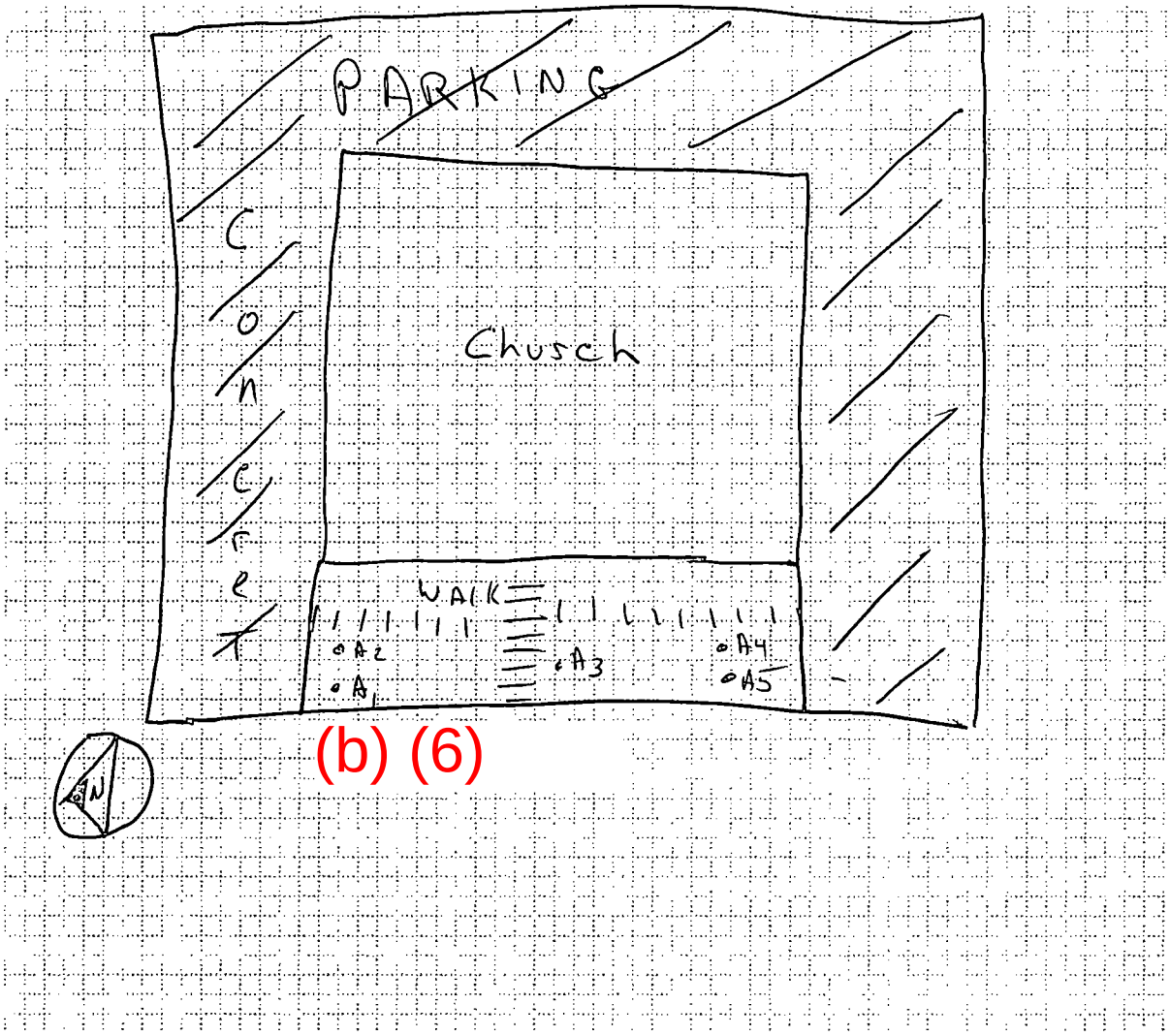

STATION ID: CV0457 **SAMPLE ID:** CV0457A-CS

SAMPLE COLLECTION TIME: 1400

Description of sample location (front, back, side yard; vegetable garden; play set; ditch, etc):

only grassy Patch

Collection: Composite or Grab **MS/MSD?** Y or N

Field Duplicate or Split: *Yes or No If yes, indicate* **Duplicate/split sample station ID:**

GPS Coordinates: Trimble [✓] Instrument #: 020168 Logged? Y or N

Aliquot #1: *Latitude:* 33.55600288 N *Longitude* 86.80044617 W

Media description: medium Brown silty Clay

Aliquot #2 *Latitude:* 33.55600534 N *Longitude* 86.80048932 W

Media description: Dark Brown silty Clay w/ Slag

Aliquot #3: *Latitude:* 33.55593728 N *Longitude* 86.80046665 W

Media description: medium Brown silty Clay w/Slag

Aliquot #4: *Latitude:* 33.55590185 N *Longitude* 86.80044988 W

Media description: medium Brown silty Clay w/ Slag

Aliquot #5: *Latitude:* 33.55589986 N *Longitude* 86.80048935 W

Media description: Same As A4

STATION ID: **SAMPLE ID:**

SAMPLE COLLECTION TIME:

Description of sample location (front, back, side yard; vegetable garden; play set; ditch, etc):

Collection: Composite or Grab **MS/MSD?** Y or N

Field Duplicate or Split: *Yes or No If yes, indicate* **Duplicate/split sample station ID:**

GPS Coordinates: Trimble [ ] Instrument #: Logged? Y or N

Aliquot #1: *Latitude:* N *Longitude* W

Media description:

Aliquot #2 *Latitude:* N *Longitude* W

Media description:

Aliquot #3: *Latitude:* N *Longitude* W

Media description:

Aliquot #4: *Latitude:* N *Longitude* W

Media description:

Aliquot #5: *Latitude:* N *Longitude* W

Media description:

ADDRESS. (b) (6) PROPERTY ID: CV0067

DATE: 3/7/13 ARRIVAL TIME: 1420

Other pertinent information (weather conditions, etc.):

57° Sunny

PROPERTY COMMENTS:

Grid for property sketch

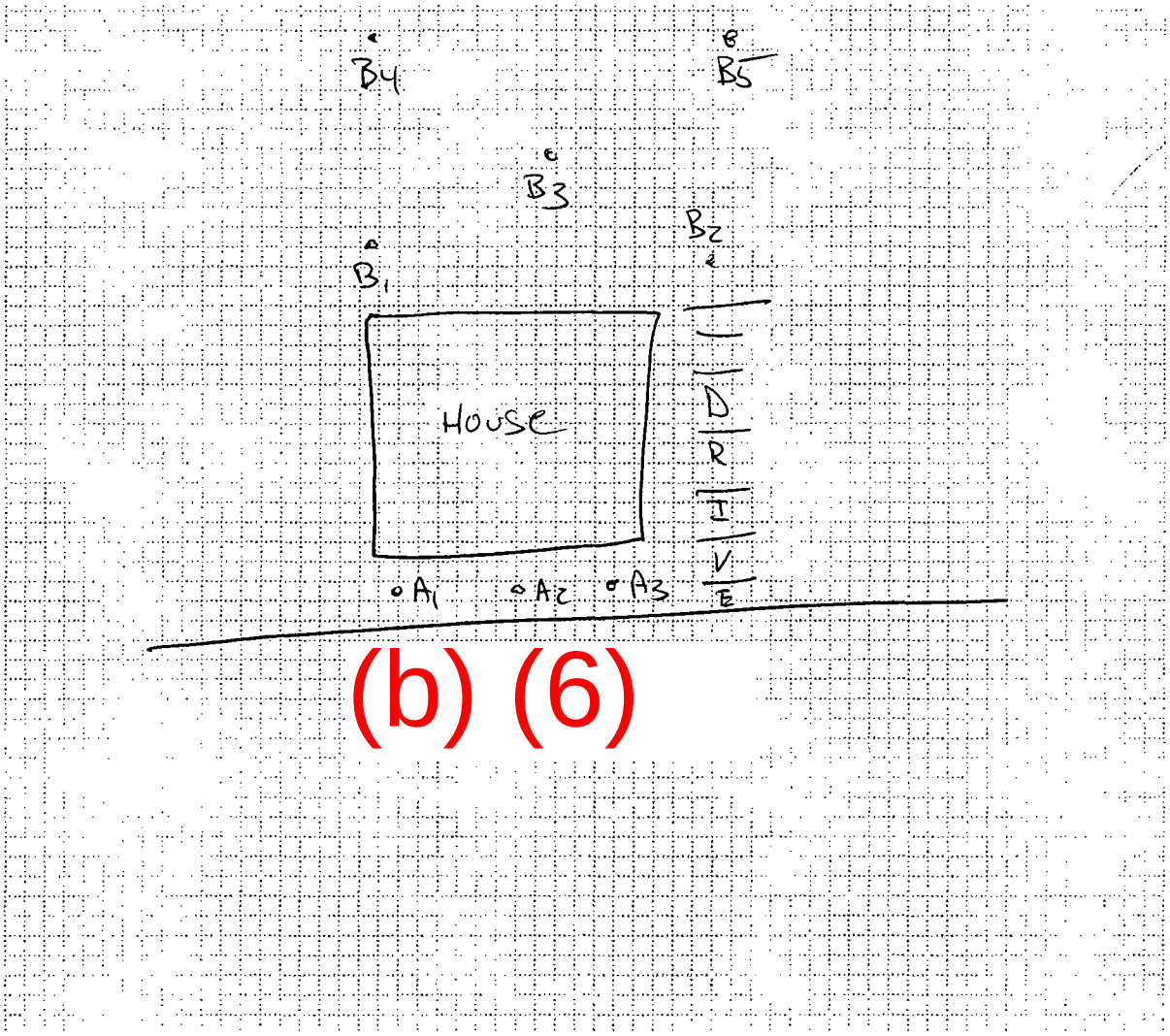

STATION ID: CV0067 **SAMPLE ID:** CV0067A-CS

SAMPLE COLLECTION TIME: 1430

Description of sample location (front, back, side yard; vegetable garden; play set; ditch, etc):

Front Yard.

Collection: Composite or Grab **MS/MSD?** Y or N

Field Duplicate or Split: *Yes or* No *If yes, indicate* **Duplicate/split sample station ID:**

GPS Coordinates: Trimble [✓] Instrument #: 020168 Logged? Y or N

Aliquot #1: *Latitude:* 33.55415571 N *Longitude* 86.80221275 W

Media description: Brown silty soil w/ coal fragments

Aliquot #2 *Latitude:* 33.55414711 N *Longitude* 86.80217261 W

Media description: Brown silty soil

Aliquot #3: *Latitude:* 33.55414566 N *Longitude* 86.80213117 W

Media description: Same As A2

Aliquot #4: *Latitude:* N *Longitude* W

Media description: ~~Same As A2~~ DP

Aliquot #5: *Latitude:* N *Longitude* W

Media description: ~~Same As A2~~ DP

STATION ID: CV0067 **SAMPLE ID:** CV0067B-CS

SAMPLE COLLECTION TIME: 1440

Description of sample location (front, back, side yard; vegetable garden; play set; ditch, etc):

Back Yard

Collection: Composite or Grab **MS/MSD?** Y or N

Field Duplicate or Split: *Yes or* No *If yes, indicate* **Duplicate/split sample station ID:**

GPS Coordinates: Trimble [✓] Instrument #: 020168 Logged? Y or N

Aliquot #1: *Latitude:* N *Longitude* 86.80219837 W

Media description: 33.55433511 medium Brown silty clay

Aliquot #2 *Latitude:* 33.55431836 N *Longitude* 86.80208861 W

Media description: Dark Brown silty clay w/ coal Frag

Aliquot #3: *Latitude:* 33.55437357 N *Longitude* 86.80214475 W

Media description: Same As B2

Aliquot #4: *Latitude:* 33.55441880 N *Longitude* 86.80218013 W

Media description: Same As B2

Aliquot #5: *Latitude:* 33.55441314 N *Longitude* 86.80208988 W

Media description: Same As B2

ADDRESS: (b) (6) PROPERTY ID: CU0590

DATE: 3/7/13 ARRIVAL TIME: 1310

Other pertinent information (weather conditions, etc.):

58°

PROPERTY COMMENTS:

Grid for property sketch

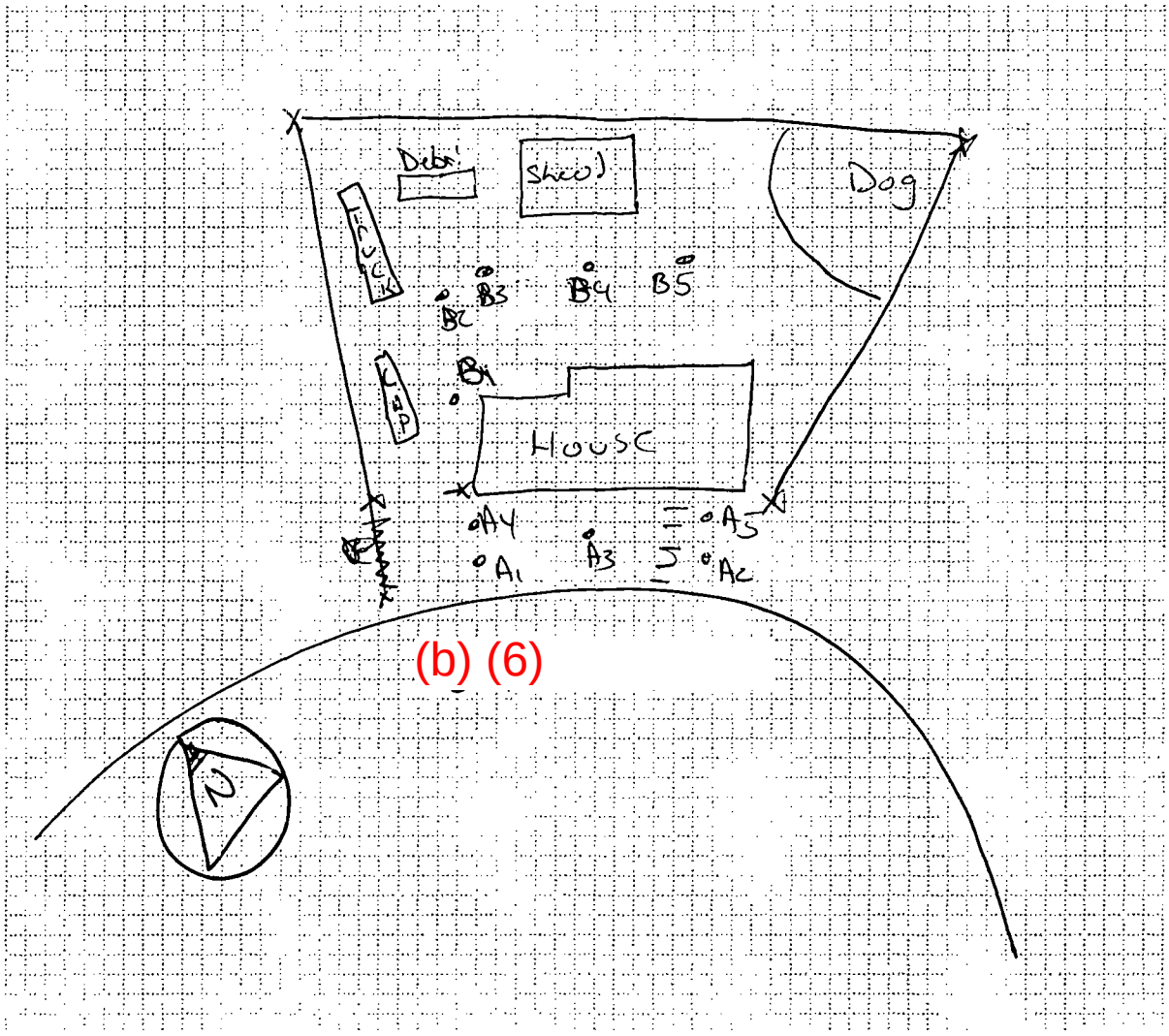

STATION ID: CV0590 **SAMPLE ID:** CV0590A-CS

SAMPLE COLLECTION TIME: 1320

Description of sample location (front, back, side yard; vegetable garden; play set; ditch, etc):

Front yard

Collection: Composite or Grab **MS/MSD?** Y or N

Field Duplicate or Split: *Yes or* No *If yes, indicate* **Duplicate/split sample station ID:**

GPS Coordinates: Trimble [✓] Instrument #: 020168 Logged? Y or N

Aliquot #1: *Latitude:* 33.56016608 N *Longitude* 86.80331030 W

Media description: medium Brown silty soil

Aliquot #2 *Latitude:* 33.56012814 N *Longitude* 86.80331338 W

Media description: Same A1

Aliquot #3: *Latitude:* 33.56015505 N *Longitude* 86.80327893 W

Media description: Same A1

Aliquot #4: *Latitude:* 33.56020258 N *Longitude* 86.80324963 W

Media description: Same A1

Aliquot #5: *Latitude:* 33.56011558 N *Longitude* 86.80325062 W

Media description: Dark Brown silty soil

STATION ID: CV0590 **SAMPLE ID:** CV0590B-CS

SAMPLE COLLECTION TIME: 1330

Description of sample location (front, back, side yard; vegetable garden; play set; ditch, etc):

Side / Back yard

Collection: Composite or Grab **MS/MSD?** Y or N

Field Duplicate or Split: *Yes or* No *If yes, indicate* **Duplicate/split sample station ID:**

GPS Coordinates: Trimble [✓] Instrument #: 020168 Logged? Y or N

Aliquot #1: *Latitude:* 33.56024837 N *Longitude* 86.80318360 W

Media description: Light Brown Sand & Black Clay

Aliquot #2 *Latitude:* 33.56025249 N *Longitude* 86.80315200 W

Media description: Dark Brown silty Clay

Aliquot #3: *Latitude:* 33.56025732 N *Longitude* 86.80311570 W

Media description: Same As B2

Aliquot #4: *Latitude:* 33.56019737 N *Longitude* 86.80309244 W

Media description: Medium silty Clay Brown

Aliquot #5: *Latitude:* 33.56015852 N *Longitude* 86.80308867 W

Media description: Same as B4

ADDRESS: (b) (6) PROPERTY ID: CV0023

DATE: 3/8/13 ARRIVAL TIME: 810

Other pertinent information (weather conditions, etc.):

45° cool

PROPERTY COMMENTS:

Grid for property sketch

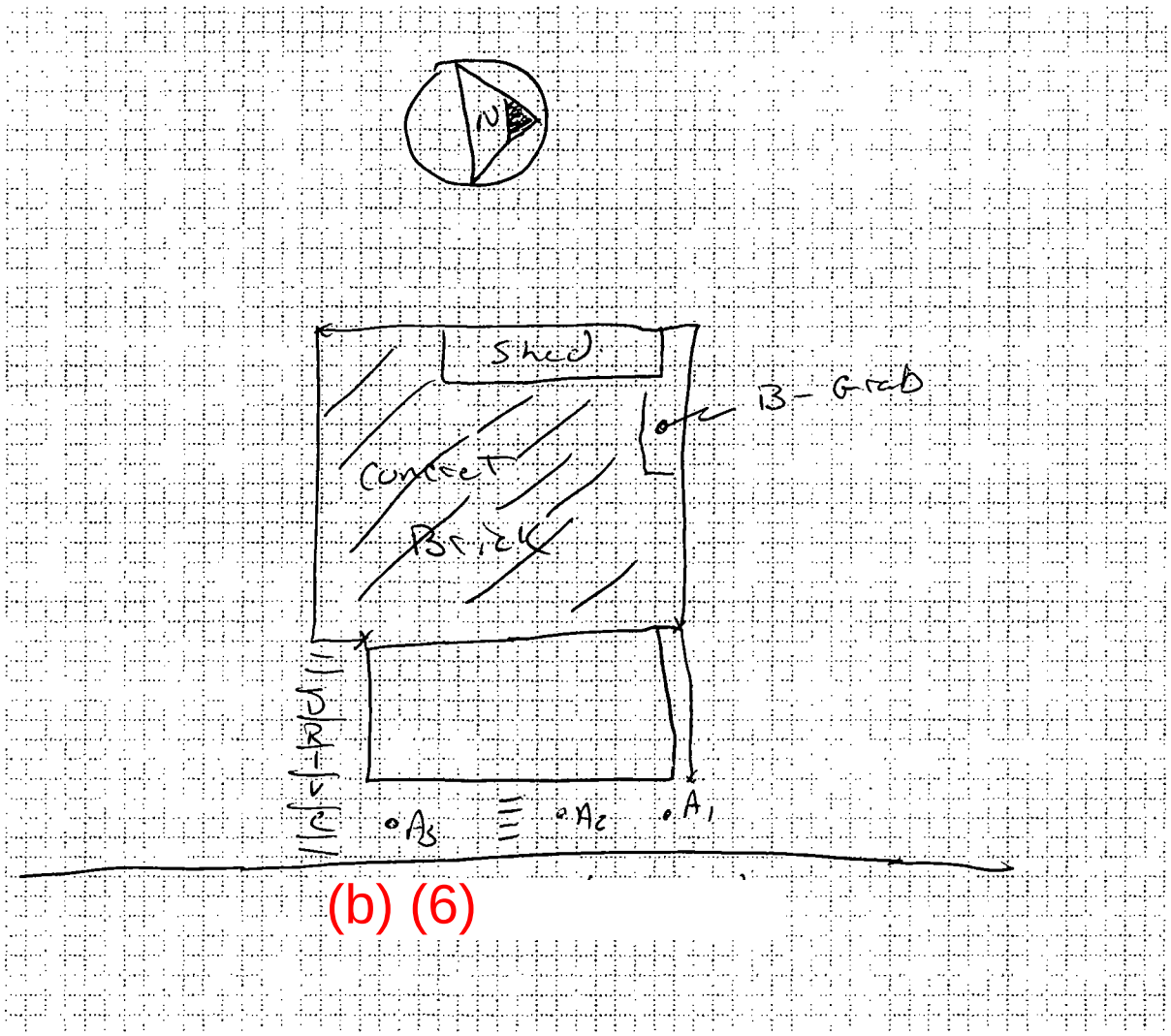

STATION ID: CV0023 **SAMPLE ID:** CV0023A-CS

SAMPLE COLLECTION TIME: 820

Description of sample location (front, back, side yard; vegetable garden; play set; ditch, etc):
Front Yard

Collection: Composite or Grab **MS/MSD?** Y or N

Field Duplicate or Split: *Yes or* No *If yes, indicate* **Duplicate/split sample station ID:**

GPS Coordinates: Trimble [✓] Instrument #: 020168 Logged? Y or N

Aliquot #1: *Latitude:* 33.55761545 N *Longitude* 86.80677517 W
Media description: medium Brown silty clay

Aliquot #2 *Latitude:* 33.55758549 N *Longitude* 86.80678734 W
Media description: Same as A, + Coal fragments

Aliquot #3: *Latitude:* 33.55754181 N *Longitude* 86.80678279 W
Media description: Dark Brown silty Clay

Aliquot #4: *Latitude:* N *Longitude* W
Media description: DP

Aliquot #5: *Latitude:* N *Longitude* W
Media description:

STATION ID: CV0023 **SAMPLE ID:** CV0023B-G

SAMPLE COLLECTION TIME: 830

Description of sample location (front, back, side yard; vegetable garden; play set; ditch, etc):
Grab in Back Corner

Collection: Composite or Grab **MS/MSD?** Y or N

Field Duplicate or Split: *Yes or* No *If yes, indicate* **Duplicate/split sample station ID:**

GPS Coordinates: Trimble [✓] Instrument #: 020168 Logged? Y or N

Aliquot #1: *Latitude:* 33.55761292 N *Longitude* 86.80702751 W
Media description: Dark Brown Sandy Silt

Aliquot #2 *Latitude:* N *Longitude* W
Media description:

Aliquot #3: *Latitude:* N *Longitude* W
Media description:

Aliquot #4: *Latitude:* N *Longitude* W
Media description:

Aliquot #5: *Latitude:* N *Longitude* W
Media description:

ADDRESS: (b) (6) PROPERTY ID: CV0065 ~~0845~~

DATE: 3/8/13 ARRIVAL TIME: 0845

Other pertinent information (weather conditions, etc.):

43° Sunny

PROPERTY COMMENTS:

Grid for property sketch

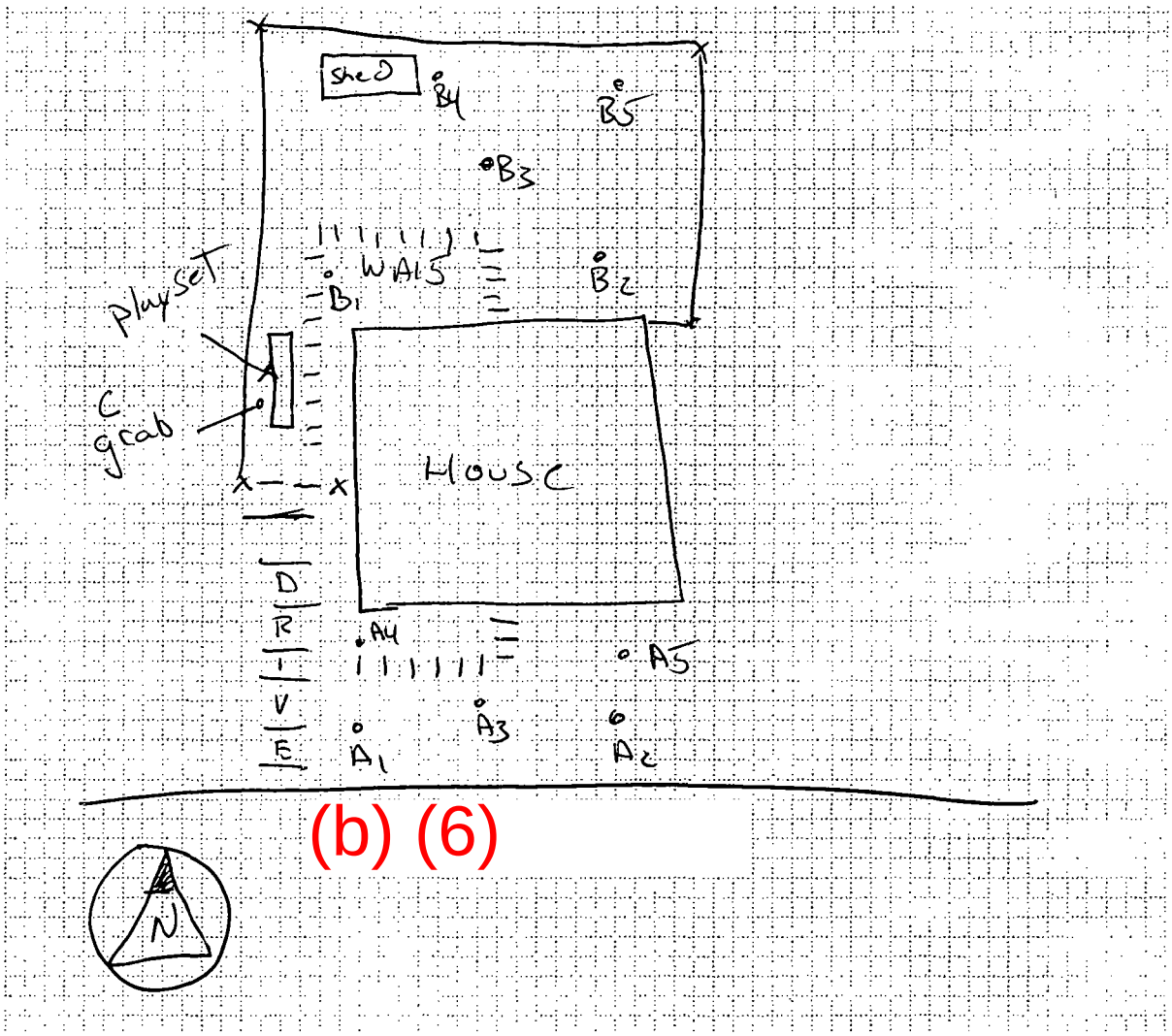

STATION ID: CV0065 **SAMPLE ID:** CV0065A-CS

SAMPLE COLLECTION TIME: 0900

Description of sample location (front, back, side yard; vegetable garden; play set; ditch, etc):

Front yard

Collection: Composite or Grab **MS/MSD?** Y or N

Field Duplicate or Split: Yes or No *If yes, indicate* **Duplicate/split sample station ID:** CV0065A-CS-D

GPS Coordinates: Trimble [✓] Instrument #: 020168 Logged? Y or N

Aliquot #1: *Latitude:* 33.55413997 N *Longitude* 86.80251384 W

Media description: Dark Brown silty clay

Aliquot #2 *Latitude:* 33.55414592 N *Longitude* 86.80240809 W

Media description: medium Brown silty clay

Aliquot #3: *Latitude:* 33.55416675 N *Longitude* 86.80245976 W

Media description: Same As A2

Aliquot #4: *Latitude:* 33.55421247 N *Longitude* 86.80251202 W

Media description: Dark Brown. silty clay + coal fragments

Aliquot #5: *Latitude:* 33.55419433 N *Longitude* 86.80224147 2 W

Media description: Same As A1

STATION ID: CV0065 **SAMPLE ID:** CV0065B-CS

SAMPLE COLLECTION TIME: 0910

Description of sample location (front, back, side yard; vegetable garden; play set; ditch, etc):

Back yard

Collection: Composite or Grab **MS/MSD?** Y or N

Field Duplicate or Split: Yes or No *If yes, indicate* **Duplicate/split sample station ID:**

GPS Coordinates: Trimble [✓] Instrument #: 020168 Logged? Y or N

Aliquot #1: *Latitude:* 33.55438226 N *Longitude* 86.80254725 W

Media description: medium Brown silty clay + coal fragments

Aliquot #2 *Latitude:* 33.55441143 N *Longitude* 86.80241681 W

Media description: Same As B1

Aliquot #3: *Latitude:* 33.55440659 N *Longitude* 86.80248987 W

Media description: Same As B1

Aliquot #4: *Latitude:* 33.55444175 N *Longitude* 86.80251130 W

Media description: Dark Brown silty clay

Aliquot #5: *Latitude:* 33.55444469 N *Longitude* 86.80241332 W

Media description: medium Brown silty clay

ADDRESS: SAme PROPERTY ID: CV 0065

DATE: 3/8/13 ARRIVAL TIME: _____

Other pertinent information (weather conditions, etc.):

PROPERTY COMMENTS:

Grid for property sketch

STATION ID: CV0065 **SAMPLE ID:** CV0065C-G

SAMPLE COLLECTION TIME: 0920

Description of sample location (front, back, side yard; vegetable garden; play set; ditch, etc):

Grab @ Play set

Collection: ~~Composite~~ or Grab **MS/MSD?** Y or N

Field Duplicate or Split: *Yes or No* ***If yes, indicate*** **Duplicate/split sample station ID:** _____

GPS Coordinates: Trimble [✓] Instrument #: 070168 Logged? Y or N

Aliquot #1: *Latitude:* 33.55433462 N *Longitude* 86.80254833 W

Media description: ~~Dark Brown~~ gravaly Clay medium Brown

Aliquot #2 *Latitude:* _____ N *Longitude* _____ W

Media description: _____

Aliquot #3: *Latitude:* _____ N *Longitude* _____ W

Media description: _____

Aliquot #4: *Latitude:* _____ N *Longitude* _____ W

Media description: _____

Aliquot #5: *Latitude:* _____ N *Longitude* _____ W

Media description: _____

STATION ID: _____ **SAMPLE ID:** _____

SAMPLE COLLECTION TIME: _____

Description of sample location (front, back, side yard; vegetable garden; play set; ditch, etc):

_____

Collection: Composite or Grab **MS/MSD?** Y or N

Field Duplicate or Split: *Yes or No* ***If yes, indicate*** **Duplicate/split sample station ID:** _____

GPS Coordinates: Trimble [ ] Instrument #: _____ Logged? Y or N

Aliquot #1: *Latitude:* _____ N *Longitude* _____ W

Media description: _____

Aliquot #2 *Latitude:* _____ N *Longitude* _____ W

Media description: _____

Aliquot #3: *Latitude:* _____ N *Longitude* _____ W

Media description: _____

Aliquot #4: *Latitude:* _____ N *Longitude* _____ W

Media description: _____

Aliquot #5: *Latitude:* _____ N *Longitude* _____ W

Media description: _____

ADDRESS: (b) (6) PROPERTY ID: CV0659

DATE: 3/8/13 ARRIVAL TIME: 0935

Other pertinent information (weather conditions, etc.):

50° Sunny

PROPERTY COMMENTS:

Grid for property sketch

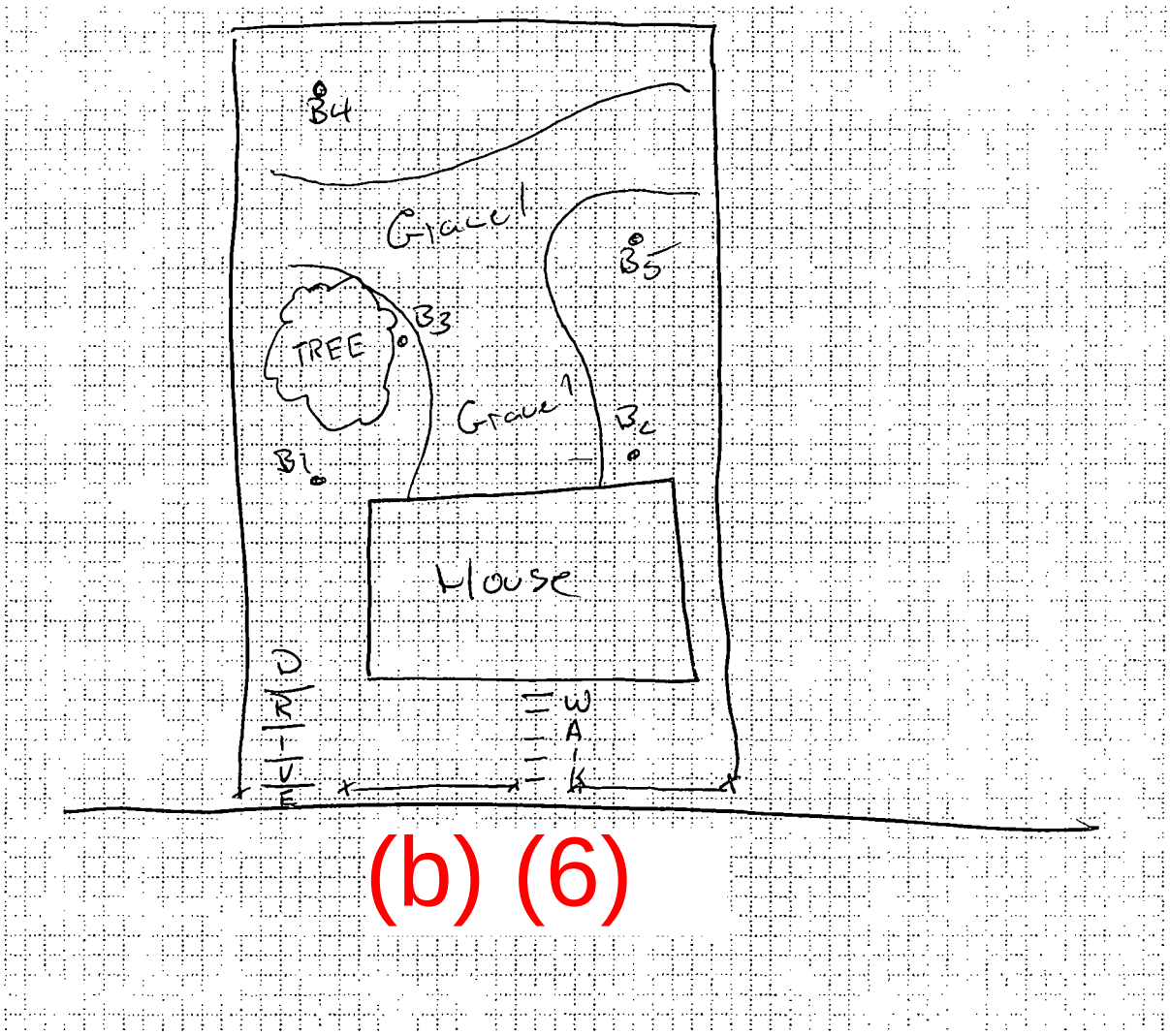

STATION ID: CV0659 **SAMPLE ID:** CV0659A-CS

SAMPLE COLLECTION TIME: 0940

Description of sample location (front, back, side yard; vegetable garden; play set; ditch, etc):

Front yard

Collection: (Composite) or Grab **MS/MSD?** Y or (N)

Field Duplicate or Split: (Yes) or No *If yes, indicate* **Duplicate/split sample station ID:** CV0659A-CS-D

GPS Coordinates: Trimble [✓] Instrument #: 020168 Logged? Y or N

Aliquot #1: *Latitude:* 33.55959725 N *Longitude* 86.80077315 W

Media description: medium Brown silty clay

Aliquot #2 *Latitude:* 33.55965779 N *Longitude* 86.80070714 W

Media description: Same A1

Aliquot #3: *Latitude:* 33.55963404 N *Longitude* 86.80075752 W

Media description: Same A1

Aliquot #4: *Latitude:* 33.55961989 N *Longitude* 86.80080119 W

Media description: Same A1 + coal fragments

Aliquot #5: *Latitude:* 33.55968204 N *Longitude* 86.80072919 W

Media description: Same A1 + coal fragments

STATION ID: CV0659 **SAMPLE ID:** CV0659B-CS

SAMPLE COLLECTION TIME: 0950

Description of sample location (front, back, side yard; vegetable garden; play set; ditch, etc):

Back yard

Collection: (Composite) or Grab **MS/MSD?** Y or (N)

Field Duplicate or Split: Yes or (No) *If yes, indicate* **Duplicate/split sample station ID:** _____

GPS Coordinates: Trimble [✓] Instrument #: 020168 Logged? Y or N

Aliquot #1: *Latitude:* 33.55969326 N *Longitude* 86.80093536 W

Media description: medium silty clay

Aliquot #2 *Latitude:* 33.55977760 N *Longitude* 86.80085543 W

Media description: Same B1

Aliquot #3: *Latitude:* 33.55978309 N *Longitude* 86.80097666 W

Media description: Dark Brown silty clay

Aliquot #4: *Latitude:* 33.55984623 N *Longitude* 86.80109343 W

Media description: Same As B3

Aliquot #5: *Latitude:* 33.55988225 N *Longitude* 86.80097380 W

Media description: Same B3

ADDRESS: _____ **PROPERTY ID:** _____

DATE: _____ **ARRIVAL TIME:** _____

Other pertinent information (weather conditions, etc.):

_____

PROPERTY COMMENTS:

_____

_____

_____

_____

Grid for property sketch

End of this logbook JM

The remaining pages in this logbook are blank and have not been scanned.