U.S. EPA BASE STUDY
STANDARD OPERATING PROCEDURE
FOR CONTINUOUS MONITORING
OF OUTDOOR AIR

Previously submitted date: April 1996

Prepared By:

Environmental Health & Engineering, Inc.
60 Wells Avenue
Newton, MA 02459-3210

EH&E Report #11663
September 2000

N:\SOP\2000\OUTDOOR.DOC

©2000 by Environmental Health & Engineering, Inc.
All rights reserved

TABLE OF CONTENTS

1.0 OBJECTIVE 1
2.0 GENERAL PROCEDURES 2
2.1 MEASURING CRITERIA AND REQUIREMENTS 2
2.2 SET-UP AND MONITORING 7
3.0 CALIBRATIONS AND QUALITY CONTROL 11
3.1 MULTIPOINT CALIBRATION OF FUJI ZFP-5 CO_2 METER 11
3.2 ZEROING AND SPANNING 12
4.0 SHIPPING AND STORAGE PROCEDURES 15
5.0 RECORDS AND DATA DOWNLOADING 16

LIST OF APPENDICES

Appendix A: Figures

1.0 OBJECTIVE

The procedure described is intended for monitoring continuously and simultaneously outdoor air quality parameters that are most commonly associated with indoor air quality: the concentrations of carbon dioxide (CO_2) and carbon monoxide (CO), temperature, and relative humidity (RH). The measurements are conducted over a period of three full work days, in coincidence with monitoring of air quality parameters in the study area indoors. The measured CO_2 and CO concentrations, relative humidities and temperatures of outdoor and indoor air are used to evaluate the performance of the building mechanical systems in conditioning the indoor environment, and to assess the intensity of CO_2 and CO sources. Indoor measurements conducted under the BASE Protocol, are described in a separate SOP titled, *Continuous Monitoring of Indoor Air.*

2.0 GENERAL PROCEDURES

Four parameters of interest for outdoor air (CO and CO_2 concentrations, temperature and relative humidity) are monitored continuously.

The CO_2 and CO concentrations are measured employing actively sampling instruments located indoors. Air is pumped from the outdoor sampling location and introduced into the CO and CO_2 detecting sensors. This type of instrument set-up has been selected in order to minimize the effects of environmental conditions (extreme temperatures, precipitation) on the performance of the sensitive analytical instruments employed for gas concentration monitoring.

The relative humidity and temperature of outdoor air are monitored with sensors especially designed for the such measurements in an outdoor environment.

2.1 MEASURING CRITERIA AND REQUIREMENTS

2.1.1 Carbon Dioxide Sensors

The CO_2 sensor employed is a FUJI Model ZFP-5 (California Analytical Instruments Inc., Orange, CA 92665-4134) Portable Gas Analyzer. This instrument utilizes non-dispersive infrared absorption for detecting gases present in the sample. The analyzer contains a built-in pump which draws a filtered sample into a measuring cell ("active" sampling). A beam of infrared light is passed through the cell and is attenuated by the CO_2 present in the sample. The degree of attenuation is related to the concentration of CO_2 in the gas sampled. The precision (repeatability) of the instrument is, according to the manufacturer's specifications, ± 5% (approx. ± 20 ppm for outdoor air). Calibration records at EH&E show a repeatability for different instruments and at different times in the range of 30 to 40 ppm and an accuracy of ± 50 ppm. The manufacturer's specified accuracy of the instrument is 5% of the reading or ± 50 ppm, whichever is greater. For comparison, the BASE Method Performance Requirement for precision is ± 50 ppm and ± 200 ppm for accuracy.

The response characteristics of the ZFP-5 Analyzer is non-linear and consequently, the output from the sensor must be recorded on the datalogger as a voltage and the corresponding CO_2 concentration calculated from the calibration curve. However, when the instrument is used to monitor CO_2 concentrations in a narrow range (as in the case of outdoor air) a section of the non linear curve may be represented by a straight line between the voltages corresponding to these two concentrations. The error in measured CO_2 concentrations resulting from this linearization is less than 1 ppm.

The operating temperature range for the CO_2 sensors is 0°C to 40°C, and the operating relative humidity range is 5% to 90% (non-condensing). The response time (time to respond to 90% of perturbation) is approximately 10 seconds. A warm-up time of no less than 15 minutes is recommended.

The voltage output from the ZFP-5 Analyzer (0 to 100 mV) is recorded on a Metrosonics dl-714 datalogger.

2.1.2 Carbon Monoxide Sensors

The CO sensor employed is an Interscan Model LD-14 Analyzer (Interscan Corp. Chatsworth, CA 91313-2496) with a 0 - 100 mV output. Gas molecules from the sample are adsorbed on an electrocatalytic sensing electrode, after passing through a diffusion medium, and are electrochemically reacted at an appropriate sensing electrode potential. This reaction generates an electric current directly proportional to the gas concentration. This current is converted to a voltage for meter or recorder readout. The instrument reading is affected by the presence of some other gases in the atmosphere, principally unsaturated hydrocarbons (*e.g.,* ethylene and hydrogen). The inlet to the instrument is protected by a bed of activated charcoal which adsorbs most interfering gases and also serves as a flow equalizer.

The instrument has a manufacturer quoted accuracy of ± 2 % and a precision of 0.5% of full scale (± 1 ppm and ± 0.3 ppm, respectively, on the 0-50 ppm scale). The

manufacturer quoted linearity of the instrument is 1% of full scale (0.5 ppm on 0 - 50 ppm scale). This compares to BASE Method Performance Requirements of ± 2 ppm for accuracy and ± 1 ppm for precision.

The instrument exhibits zero drift (up to ± 2 % of full scale in 24 h) and span drift (up to ±2% of full scale in 24 h). “Drift” is defined as an undesired change in output over a period of time, unrelated to input, operating conditions, or load. This drift requires that the zero and span of the instrument be checked and adjusted, if necessary, every 24 hours.

The nominal operating temperature range for the CO sensors is 0°C to 40°C. The response time (time to 90% of perturbation) is approximately 20 seconds. A warm-up (equilibration) time of no less than 2 minutes is recommended.

The voltage output from the LD-14 Analyzer (0 to 100 mV) is recorded on a METROSONICS dl-714 datalogger.

2.1.3 Indoor Temperature Sensor

The temperature within the CO sensor chamber is monitored using a Telaire, Inc. Model 1058T thermistor-based sensor with a range of 2°C to 98°. Cumulative calibration records recorded at EH&E show that generally the precision of these sensors is better than ± 0.1C and the accuracy better than 0.2°C. The performance requirements specified in the BASE Protocol are 1% (approx. ± 0.2°C) for precision and ± 0.3°C for accuracy.

The voltage output from the Telaire 1058T sensor (0 to 1 V) is recorded on a Metrosonics dl-714 datalogger. This data is not submitted as part of building data, but serves to monitor fluctuations in temperature that could affect the CO and CO_2 sensor readings.

2.1.4 Outdoor Temperature and RH Sensors

The outdoor temperature and relative humidity are monitored with a Novalogger Model 195-201 (NovaLynx Corporation, Grass Valley, CA) equipped with a Model 210-4480-A temperature probe and a Model 210-5320 dew point temperature probe. These sensors are operated in conjunction with a Motor Aspirated Radiation Shield (Model 8152-A) that protects the sensors from precipitation and solar radiation while drawing air over the sensors at a constant rate. The relative humidity of the air sampled is calculated from the air temperature and the dew point temperatures.

The 210-4480 temperature probe uses a precision composite thermistor as the sensing element. The sensor is formed of three sensors which, combined with a resistor network, produce a linear response (< ± 0.1°C deviation over a 50°C range). The output voltage range of the instrument is set for 0 to 5V (-72.8 to 106.0°C). The manufacturer quoted accuracy of the instrument is ± 0.1°C and its time constant 15 s. The performance requirements specified in the BASE Protocol are 1% (approx. ± 0.2°C) for precision and ± 0.3°C for accuracy.

The nominal operating temperature range for the thermistor-based sensors is 50°C to 50°C.

The Model 5320 Dew Point Thermistor Probe consists of a bifilar wound heating element over a cavity encasing a precision three composite thermistor temperature measuring sensor. The bifilar heater is wound over a fiberglass cloth which is treated with a lithium chloride salt solution. In operation, the salt becomes electrically conductive by absorbing moisture from the atmosphere. An electrical current passing through the heating element heats it to an equilibrium temperature that is a function of the moisture content of the air. This temperature is measured by the thermistor network and translated to the dew point temperature.

The relative humidity is calculated from the dry and wet bulb (dew point) temperatures by the relation:

$$RH(\%) = 100 \times \exp\{-5306\,(t - t_o)/[(t+273)(t_o+273)]\} \qquad (1)$$

Where t is the dry bulb (ambient) temperature and t_o the dew point temperature, both in degrees centigrade. A further correction is applied to account for the effect of humidity on the heat transfer from the lithium chloride saturated wick which itself is a function of relative humidity. This correction factor, expressed as a additive factor to the measured apparent dew point t_o, is calculated from the following equation (Novalogger Model 275-002 Operating and Service Manual, Manual No. 5320-001, NovaLynx Corp., 1990):

$$t = -1.93 + 0.0714 \times RH - 0.000355 \times RH^2 \qquad (2)$$

The corrected RH value is obtained by substituting $t_o' = t_o + \quad t$ in equation (1) and recalculating the relative humidity.

The measurable wet bulb temperature ranges between -40°C to +40°C. The quoted accuracy is ± 1.3°C, which approximately corresponds to 8% of the measured RH (*e.g.*, ± 3.4% at RH=40%, t = 25°C; ± 5.9% at RH=75%, t = 25°C). This compares to the BASE Method Performance Requirement of ± 5% RH for accuracy and ± 5% RH for precision. The instruments have an operating temperature range of -40°C to 55°C and are rated for measuring relative humidities between 12% and 100% (at 30°C). This meets the BASE Method Performance Requirement of 20% to 90% RH. The output voltage range of the instrument is set for 0 to 5V which corresponds to a temperature range of -71.5 to 62.0°C). The response time (time to 90% of perturbation) is approximately 2 minutes.

The Motor Aspirated Radiation Shield delivers air at a rate of 700 lpm (25 CFM), has an operating temperature range of -40°C to 55°C, and a radiation error of ±0.05°C.

2.1.5 Logging of Ambient Temperature and Dew Point

The Novalogger data acquisition board has 16 analog channels available on the sensor interface panel. For the present application two channels (ambient temperature sensor and dew point temperature sensor) are used. Both channels are wired and programmed to directly output temperature readings. The logger is set to measure temperatures at a rate of 4/minute and to average readings over a five minute interval.

2.1.6 Metrosonics dl-714 Dataloggers

The datalogger collects and stores signals from the CO and CO_2 sensors, as well as the temperature sensor installed inside the CO sensor chamber. The Datalogger is wired to receive eight different signals referenced to ground; however, for the outdoor station, only three of these channels are used for recording signals. The channel assignments are indicated in the set-up section below. The data loggers will be set up for data acquisition at a rate of 4 readings/minute and averaging of data over 5 minutes (20 data points).

The set points (zero and span) for each channel of the dataloggers will be adjusted before each seasonal BASE study according to the calibration procedures discussed in Section 3.0.

2.2 SET-UP AND MONITORING

2.2.1 Instrument Set-Up

The outdoor monitoring station consists of a Novalynx station, which must be set-up at the selected outdoor monitoring site during Monday of the study week. The outdoor sampling site setup is illustrated in Figure 1 of Appendix A. The data logger is preprogrammed for use with the temperature and dew point sensors. Channel assignments and channel span settings are detailed in Table 2.1.

Table 2.1 Channel assignments and channel span settings			
Sensor	**Logger channel**	**Signal range**	**Voltage range**
Temperature	1A	-72.8 - 106.0° C	0 to 5 V
Dew Point	1B	-71.5 - 62.0° C	0 to 5V

The datalogger is powered by a 110VAC/12VDC transformer (not shown in Figure 1).

The FUJI Model ZFP-5 CO2 monitor, the Interscan LD-14 CO monitor, and a Telaire 1058T temperature sensor are set up at an indoor site that is in close proximity to the outdoor sampling site where the NovaLynx station is set-up. The auxiliary equipment used for this set-up is illustrated in Figure 2 of Appendix A (integrated into a modular set-up prior of taking it to the field) and its components are further described below.

- Teflon pump for drawing air from the outdoor site to the CO_2 and CO monitoring instruments (KNF Neuberger Model JN728 FTP with a free air capacity of 17 lpm).
- Heat transfer coil for equilibrating the sampled outdoor air to ambient conditions (approximately 4' of 1/4" OD copper tubing).
- Liquid trap for collecting condensate droplets (Wilkerson W3A-04).
- Bleed valves (3) to equilibrate pressure to atmospheric
- Two flowmeters (rotameters) calibrated for 0.5 to 1 lpm range.
- Three-way valves (polyethylene/Teflon) for connecting to calibration gas cylinders.
- Tubing (3/8" ID polyethylene tubing connecting the outdoor site to the pump, flexible (rubber) tubing, and Teflon tubing for other connections.
- Cables for instrument-datalogger connection.

The set-up for continuous monitoring and zeroing and spanning is illustrated in Figure 3 of Appendix A. The Interscan LD-714 is encased in a heated case that maintains the gas fed to the instrument at above 20°C. In order to analyze for CO_2 at the same temperature, the line feeding the CO_2 sensor is passed through the Interscan case for thermal equilibration. Two Swagelock fittings are installed in the sides of the Interscan instrument case for the inlet and outlet of the CO_2 sample. Within the case, the CO_2

sample is drawn through approximately 2 feet of flexible tubing before entering the CO_2 sensor.

The Metrosonics dl-714 datalogger is programmed to monitor signals from the CO, CO_2 and temperature sensors and is set for signal ranges as described in Table 2.2.

Table 2.2 Channel assignments and channel span settings

Sensor	Logger channel	Signal range	Voltage range
CO	1	0 to 50 ppm	0 to 100 m V
CO_2	2	0 to 2000 ppm	0 to 100 mV*
T	3	0 to 100°C	0 to 1V

* Non-linear response

2.2.2 Log Book

A log book will be kept at the location of the outdoor sampling instrumentation and all procedures and observations conducted at the outdoor site, particularly readjustments of datalogger calibration points, will be recorded there. It is important that all field investigators record in the logbook all visits to the site.

2.2.3 Initial Setup

The sensors are connected and tested for proper functioning on the Monday of the study week. The zero and span values of the CO_2 and CO sensors are also checked at this time (see Section 3.2). The time and date stamps on all dataloggers are synchronized using both operator watches as well as with the main field computer clock.

2.2.4 Monitoring

Continuous monitoring at the outdoor site is started on Tuesday morning and continued through Thursday afternoon. The site should be up and running by approximately 8:00 a.m. Tuesday morning and breakdown of the site should occur between 5:00 p.m. and 5:30 p.m. on Thursday afternoon. During the monitoring period instrument outputs are

checked against standards at regular intervals as prescribed in the BASE Protocol. (See Section 3.2).

2.2.5 Downloading Of Logged Data

Data is downloaded from the NovaLynx datalogger at the end of each monitoring day. Downloading will occur at the end of the workday on Tuesday, Wednesday, and Thursday or as access permits. The data downloaded on Tuesday and Wednesday serve as a back-up to protect against data loss due potential datalogger malfunctions.

After downloading of data on Thursday afternoon the sensors and dataloggers must be turned off, and the monitoring station disassembled for shipping.

3.0 CALIBRATIONS AND QUALITY CONTROL

3.1 MULTIPOINT CALIBRATION OF FUJI ZFP-5 CO_2 METER

3.1.1 FUJI ZFP-5 CO_2 Sensors

The CO_2 sensors are calibrated with no fewer than five calibration gases in the range of 0 to 2,000 ppm prior to each study season. On the basis of this curve two compositions near normal outdoor air CO_2 concentrations *(e.g.,* 300 ppm and 400 ppm) are selected to define a segment for which a linear concentration voltage relation is calculated. These two points, defined by the corresponding concentrations and voltages, are used as set points in the dl-714 datalogger. In the field, the instrument response is checked with a zero CO_2 calibration gas and with a calibration gas with a concentration near that of outdoor air (approximately 350 ppm).

3.1.2 Interscan LD-14 CO Analyzer

The CO analyzer is a linear response instrument (± 1% of full scale); however, it exhibits zero and span drifts and thus requires occasional field adjustment. The precision and linearity of the analyzer is checked periodically (before and after each seasonal BASE study) by multipoint calibration using no fewer than four calibration gases in the concentration range of 0 to 50 ppm. The linearity check will be considered satisfactory if a correlation coefficient equal to or better than 0.999 is attained. The mean square deviation from the linear correlation(s) will be established from this data. Multipoint calibrations conducted in EH&E's laboratory show variances(s) of ± 0.5 to 1.5 ppm.

In the field, the zero and span (using a calibration gas with approximately 10 ppm of CO) for the CO sensor are set on Monday of the week of testing.

3.1.3 Indoor Temperature Sensor

Before and after each seasonal BASE study, each temperature sensor is calibrated and checked for linearity of response. This check is conducted by exposing the sensor, inserted inside an aluminum block and next to the NIST calibrated standard, in sequence to different temperatures in a constant temperature bath. No fewer than five temperatures are tested (*e.g.*, 0°C, 20°C, 25°C, 30°C, 40°C). The linearity check is considered satisfactory if a correlation coefficient equal to or better than 0.999 is attained. The mean square deviation from the linear correlation(s) is established for each sensor from this data.

3.1.4 Outdoor Temperature Sensor (Model 4480)

Factory calibration only.

3.1.5 Outdoor Dew Point Sensor (Model 5320)

Factory calibration only.

3.2 ZEROING AND SPANNING

The stability (*i.e.*, accuracy) of the CO_2 and CO sensors is checked daily during the monitoring period by measuring their response to calibration gases (air-CO_2 and air-CO mixtures) of known composition.

A zero and span check of the outdoor CO_2 and CO sensors is performed on Monday of the study week and on the mornings of Tuesday, Wednesday and Thursday. All outdoor site dataloggers will remain in the logging mode while performing the zero and span check.

To verify the response of the CO_2 sensor, a hydrocarbon-free air is used as the zero gas and the span gas is a gas mixture with a CO_2 concentration in the range of 350 to 500 ppm.

To verify the response of the CO sensor, a hydrocarbon-free air is used as a zero gas and the span gas is a hydrocarbon-free air with admixed CO in the range of 10 to 15 ppm.

All zero and span gases are contained in compressed gas cylinders equipped with appropriate pressure regulators and flow meters. For response verification of the CO_2 and CO sensors, the Teflon pump chamber has been designed with separate three way valves, each with an unrestricted vent located downstream of the valves and upstream of the sensors. One three way valve will serve the CO_2 sensor and the other will serve the CO sensor. For each three way valve there exists an air inlet port, a calibration port and an air outlet port. While in the sampling mode the air inlet port is open to the air outlet port, thus delivering the sample air to the unrestricted vent and to the sensors. However when in the calibration mode, the calibration port is open to the air outlet port. In this mode the air inlet port will be completely closed.

Prior to introducing the calibration gas to the sensors through the calibration port on the three way valve, the flow rate from each cylinder is adjusted to approximately 1.0-1.5 l/m. For verifying the response of the CO_2 sensor, 1.0-1.5 l/m of zero air is delivered to the three way valve serving the CO_2 sensor. **It is important to ensure that there is a slightly positive flow from the unrestricted vent while delivering the calibration gases to the sensors**. After the sensor reading has equilibrated (usually 2 to 5 minutes), the reading is recorded in the site logbook together with other pertinent information. The procedure is repeated for the CO_2 span gas and likewise for the CO calibration gases.

The BASE Protocol specifies primary and secondary ranges of deviations from calibration response values for each instrument. If zero and span or calibration check

readings fall within the primary range, the instrument is considered to be “in spec”. If one of the two sensor readings (zero or span) or a calibration check of other instruments falls between the primary and secondary range, the continued use of the instrument must be justified and the data obtained with the sensor or instrument must be appropriately flagged. If the sensor or instrument response falls outside the limits set by

the secondary range the sensor or instrument must be replaced or recalibrated. The primary an secondary ranges for sensors and instruments are given in Table 3.1.

Table 3.1 Primary an secondary ranges for sensors and instruments

Parameter	**Primary Range** (instrument is "in spec" if below this value)	**Secondary Range** (below this value requires justification for continued use; above this value renders data unusable)
Temperature	± 1.0 °C	± 2.0 °C
Relative humidity	± 5% RH	± 7% RH
Carbon dioxide	zero ± 50 ppm span ± 75 ppm	zero ± 75 ppm span ± 150 ppm
Carbon monoxide	zero ± 2 ppm span ± 3 ppm	zero ± 3 ppm span ± 5 ppm
Sample flows	± 10%	± 15%

For the CO monitor the zero and/or span is adjusted after each zero and span test if either value differs by more than ± 2s from the previous value.

4.0 SHIPPING AND STORAGE PROCEDURES

When shipped from city to city the sensors and all associated equipment must be packed inside padded cases. While in storage or transport, the instrument will not be exposed to temperatures outside the manufacturers' specified range.

5.0 RECORDS AND DATA DOWNLOADING

Data downloading and storage will be conducted in accordance to the procedures outlined in the *EPA Large Buildings Studies Integrated Protocol"*, (RTI/4479/013), Section 7.1.2: **Management of Real-Time Monitoring Data**.

APPENDIX A

FIGURES

BASE OUTDOOR SETUP

Figure 1

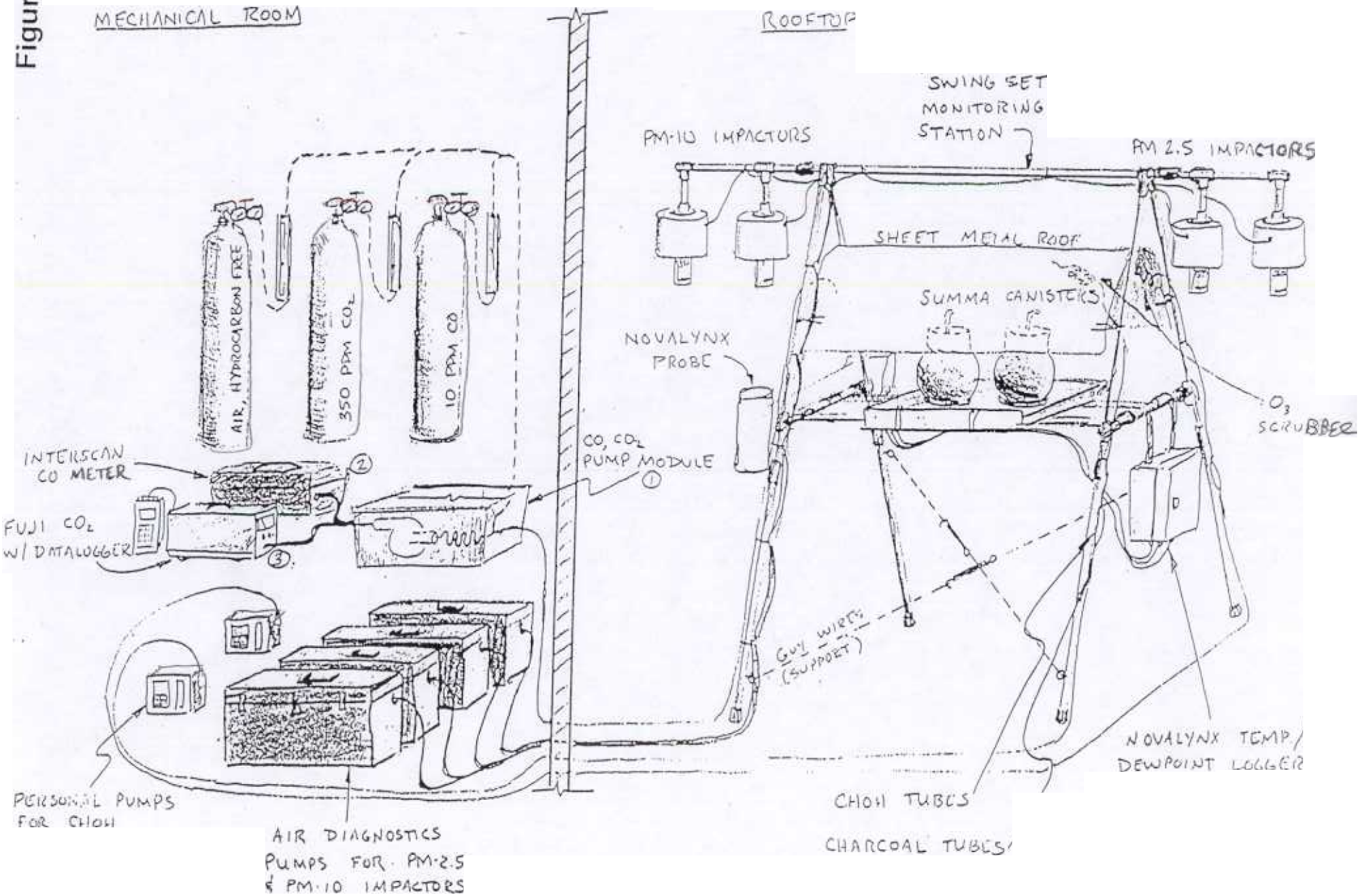

Figure 2

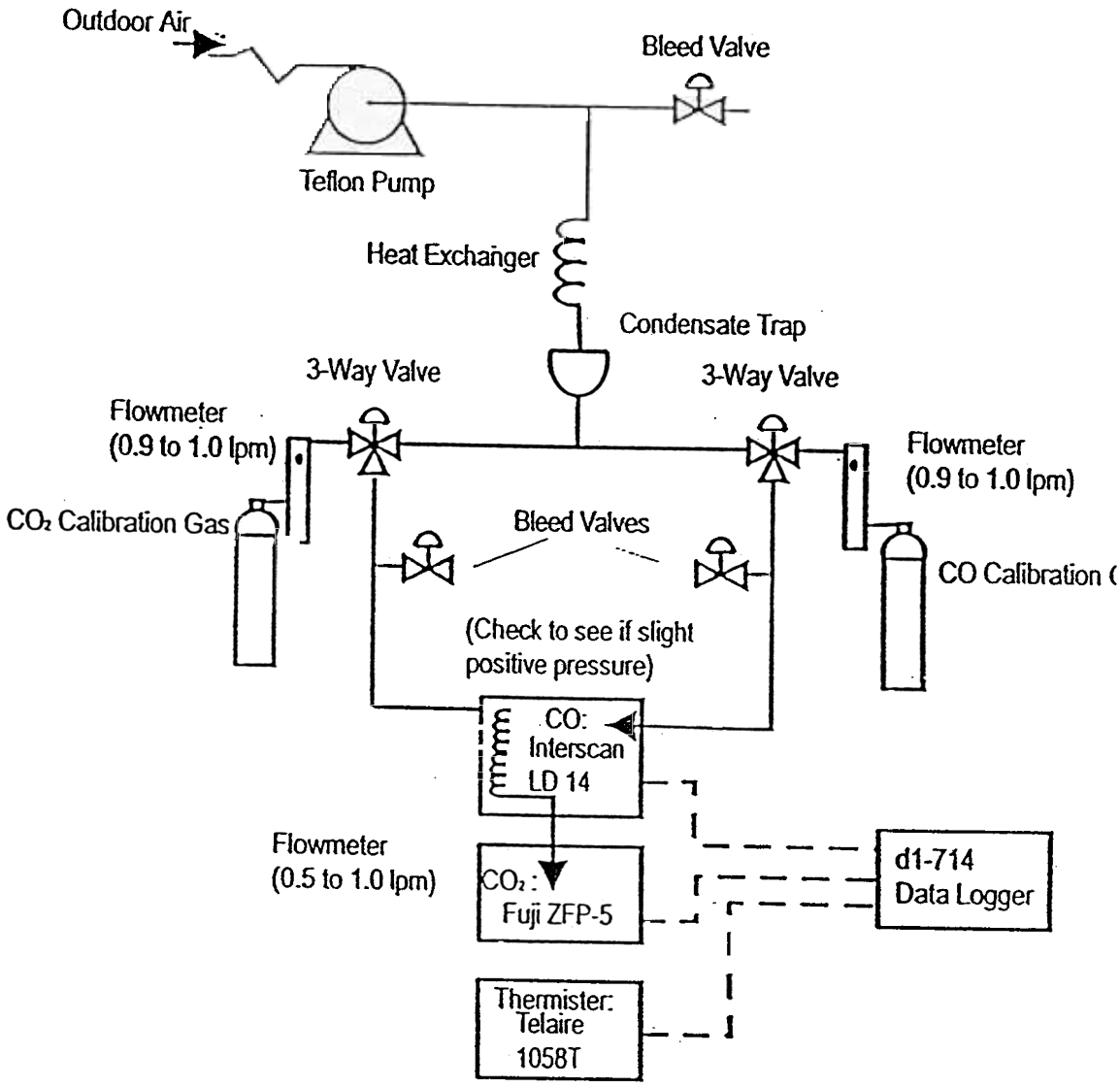
Outdoor Air
Bleed Valve
Teflon Pump
Heat Exchanger
Condensate Trap
3-Way Valve
3-Way Valve
Flowmeter
(0.9 to 1.0 lpm)
Flowmeter
(0.9 to 1.0 lpm)
CO_2 Calibration Gas
Bleed Valves
CO Calibration (
(Check to see if slight
positive pressure)
CO:
Interscan
LD 14
Flowmeter
(0.5 to 1.0 lpm)
CO_2 :
Fuji ZFP-5
d1-714
Data Logger
Thermister:
Telaire
1058T

Figure 3

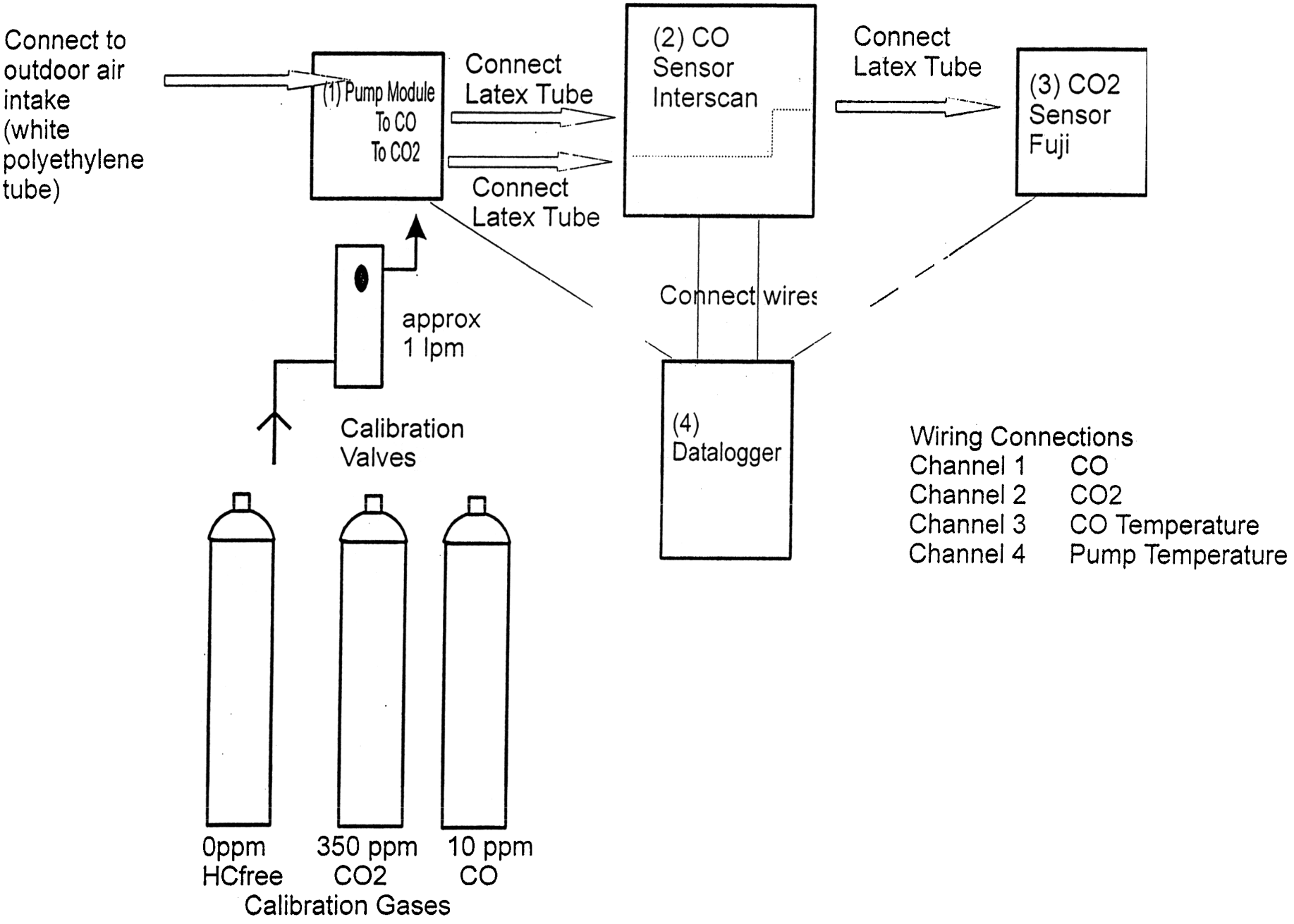
Connect to outdoor air intake (white polyethylene tube)
(1) Pump Module
To CO
To CO2
Connect Latex Tube
Connect Latex Tube
(2) CO Sensor Interscan
Connect Latex Tube
(3) CO2 Sensor Fuji
Connect wires
approx 1 lpm
Calibration Valves
(4) Datalogger
Wiring Connections
Channel 1 CO
Channel 2 CO2
Channel 3 CO Temperature
Channel 4 Pump Temperature
0ppm HCfree
350 ppm CO2
10 ppm CO
Calibration Gases