CHAPTER 13
DETECTION AND IDENTIFICATION OF ENERGETIC MATERIALS

13-1. Introduction. This chapter discusses the methods used to detect and identify energetic materials. Almost all of the analytical chemistry techniques are used. Normally, identification involves a series of tests, each providing a clue to the identity of the compound. In addition to the techniques discussed in this chapter, identifying information can be obtained from physical properties such as melting point, crystalline structure, density, physical state, color, and indicies of refraction.

13-2. Wet Chemical Methods. When a test sample is treated with an appropriate reagent, a coloration is produced which is characteristic of the compound being tested. These reactions are known as color reactions and may help identify the sample. The compound which produces the color change is called the color reagent. Color reactions are used to some degree for preliminary identification and confirmation but have largely been replaced by the more modern instrumental techniques. Table 13-1 lists some of the common color reactions used to identify explosives.

Table 13-1. Color Tests

	Water Solution or Extract of Energetic Material			Solid of Energetic Material		
				Color effect of test with solution of-		
	Color of solution	Color of universal pH test	Color of precipitate with Nessler's reagent	Ethylenediamine	Diphenylamine	Thymol
TNT	(Insoluble)	-	-	Maroon	Colorless	-
Tetryl	(Insoluble)	-	-	Red	Blue	Green
Picric acid	Yellow	Red	(No ppt)	Orange	-	-
Explosive "D"	Yellow	-	Brown	Orange	-	-
Haleite	None	-	(No ppt)	None	Blue[1]	Orange
Nitroguanidine	None	-	White	-	Blue	Green
Ammonium nitrate	None	-	Brown	None	Dirty green	Green[1]
PETN	(Insoluble)	-	-	None	Dirty green	Green
Nitroglycerin	None	-	(No ppt)	-	Deep blue	Green
DEGN	None	-	(No ppt)	-	Deep blue	Brown[2]
Nitrocellulose	None	-	-	-	Blue	Green
Tritonal	(Insoluble)	-	-	Maroon	Colorless	-
Tetrytol	(Insoluble)	-	(No ppt)	Maroon	Intense blue	Green
Picratol	Yellow	-	Brown	Maroon	-	-
Ednatol	None	Orange	(No ppt)	Maroon	Intense blue	Orange
Amatol	None	-	Brown	Maroon	Dirty green	Green
Ammonal	None	-	Brown	Maroon	Dirty green	Green
Pentolite	None	-	(No ppt)	Maroon	Dirty green	Green
Black powder[3]	None	No change	-	-	Blue	Green

[1]Color appears immediately.

[2]Sometimes explodes mildly (puffs) upon addition of sulfuric acid.

[3]Tests of dried water extract.

Digitized by Google

000327

The tests are performed in the following manner.

a. *Test 1.* Place 0.05 gram of the explosive in a 5 milliliter beaker, add 2 to 3 milliliters of distilled water, and stir for 5 minutes.

(1) Observe color of liquid.

(2) Wet one end of a strip of universal pH indicator paper and note any change in color.

(3) Add a drop of Nessler's reagent and note the color of any precipitate formed. Prepare the reagent by dissolving five grams of potassium iodide in a minimum quantity of cold distilled water and adding a saturated aqueous solution of mercuric iodide until a faint precipitate is formed. Add 40 milliliters of 50-percent potassium hydroxide solution. After the solution has clarified by settling, dilute to 100 milliliters with distilled water, allow to settle, and decant.

b. *Test 2.* Place 0.05 gram of the unknown material in an indenture of a white porcelain spot-test plate. Add two or three drops of a 65 to 68 percent aqueous solution of ethylenediamine and stir. Note the color of the solution (not the solid).

c. *Test 3.* Place 0.05 gram of the unknown material in an indenture of a white porcelain spot-test plate and add three or four drops of a diphenylamine solution. Stir the mixture and, after one minute, note the color of the solution. Prepare the diphenylamine solution by dissolving one gram of diphenylamine in 100 milliliters of concentrated CP sulfuric acid.

d. *Test 4.* Place 0.05 gram of the unknown material in an indenture of a white porcelain spot-test plate. Add an equal amount of crystalline thymol and three drops of concentrated sulfuric acid. Stir the mixture and note its color after five minutes or more.

e. *Additional Tests.* If the unknown material is not identified completely by the tests in subparagraphs 13-2 a. through d. and data listed in table 13-1, tests should be performed to determine whether the material is one of those indicated in (1) through (14) below.

(1) RDX. Place several milligrams of the white, unknown material in a test tube and add about 200 milligrams of thymol and six drops (0.3 ml) of concentrated sulfuric acid. Warm the tube for five minutes at 100°C, and add 5 to 10 milliliters of ethanol. RDX produces a rich blue color. Under these conditions sugars and aldehydes give a brown color, and HMX gives a pale blue-green color. RDX can be further distinguished from HMX by repeating the test at 150°C. Under these conditions RDX still gives a blue color, but HMX produces an olive color.

(2) Composition A-3. Place 0.1 gram of the material in a 10 milliliter beaker and add two or three drops of acetone. Warm the mixture and allow to stand for five minutes. Evaporate the acetone by gently warming on a steambath, cool, and add 2 milliliters of carbon tetrachloride. Cover the beaker and warm the contents, occasionally swirling the mixture. Cool the mixture and allow the undissolved material to settle. Decant the supernatant liquid into a 5 milliliter beaker, evaporate to dryness, and note if a waxy (not tarry) residue is obtained. Dry the undissolved material in the 10 milliliter beaker and test for RDX as described in (1) above.

(3) Composition B. Place 0.2 gram of the pale yellow to medium brown material in a 10 milliliter beaker and add 2 to 3 milliliters of chloroform. Cover the beaker. Warm and digest the mixture for 10 minutes with occasional swirling. Decant the supernatant liquid through a filter paper and evaporate the filtrate to dryness. Repeat digestion of the insoluble residue in the beaker with three more portions of chloroform discarding the decanted liquid in each case. Dry the insoluble residue by evaporating any adherent chloroform. If the original material was composition B, the residue from the chloroform solution consists of TNT and wax. Test the TNT and wax mixture with ethylenediamine and diphenylamine as described above. The insoluble residue obtained by extraction with chloroform consists of RDX. Test as described in (1) above.

(4) Composition C-3. Place 0.2 gram of the putty-like explosive in a 10 milliliter beaker and add 5 milliliters of benzene. Mix and digest for 10 minutes crushing any lumps present. Decant the supernatant liquid through a filter paper and evaporate the benzene with gentle heating. Note whether a dark, tarry residue remains. Wash the insoluble residue left by benzene extraction with two or three, 3 milliliter portions of a 2:1 ether-ethanol mixture and dry the washed residue. Test this as described under RDX in (1) above. To the decanted ether-ethanol washings, add 15 milliliters of distilled water and heat the mixture until all ether and alcohol are removed. If a white precipitate (nitrocellulose) is noted, catch the precipitate on a filter, wash with ethanol, dry by evaporation of the ethanol, and test for nitrocellulose as indicated in table 13-1.

Digitized by Google

000328

(5) Torpex. Place 0.2 gram of the explosive in a five milliliter beaker and extract with three, 3 milliliter portions of acetone. Dry the insoluble residue and examine under a microscope. Note if the residue has the characteristic appearance of metallic aluminum. Place 0.2 gram of the explosive in a 5 milliliter beaker and digest with two, 3 milliliter portions of benzene, decanting the benzene into a small evaporating dish. Evaporate the benzene solution to dryness and test for TNT as indicated in table 13-1. Dry the insoluble residue from the benzene extraction and test for RDX as described in (1) above.

(6) Tritonal. Place 0.2 gram of the explosive in a 10 milliliter beaker and add 5 milliliters of acetone. Stir, allow any undissolved material to settle, and decant the liquid. Wash the insoluble matter with two, 5 milliliter portions of acetone, dry, and examine under a microscope. Note if the insoluble matter has the characteristic appearance of metallic aluminum. Subject the separated explosive to the tests prescribed for TNT in table 13-1.

(7) Amatol. Place 0.2 gram of the yellow material in a 5 milliliter beaker, add 3 milliliters of distilled water, and stir for five minutes. Decant the liquid through a filter and evaporate to dryness. Test the dried solid as prescribed for ammonium nitrate in table 13-1. Dry the water-insoluble residue and test as prescribed for TNT above.

(8) Ammonal. Place 0.2 gram of the explosive in a 10 milliliter beaker and digest with 3 milliliters of distilled water. Decant the liquid through a filter and evaporate to dryness. Test the dried solid as prescribed for ammonium nitrate. Digest the insoluble residue in the beaker with three, 3 milliliter portions of acetone decanting these through a filter. Dry the insoluble residue and examine under a microscope. Note if the residue has the characteristic appearance of metallic aluminum. Evaporate the filtrate to dryness by warming gently. Test the dried solid as prescribed for TNT above.

(9) Lead azide.

(a) Test the explosive for solubility in water. Lead azide is insoluble in water.

(b) Transfer 5 milligrams of the sample explosive to a 10-milliliter beaker and add 10 drops of a 10-percent ceric ammonium nitrate solution. A reaction accompanied by evolution of nitrogen oxides (red fumes) is indicative of the presence of azide.

(c) Treat the solution of the sample obtained in (b) above with a few drops of a 10 percent aqueous solution of potassium dichromate. A yellow to reddish-yellow precipitate is indicative of the presence of lead.

(d) Transfer 2 milligrams of the sample to a 5 milliliter beaker. Add 5 milliliters of a 10 percent aqueous solution of ferric chloride solution. A red color is formed which disappears slowly when 2 to 3 milliliters of dilute mercuric chloride solution are added. This confirms that the explosive is lead azide.

(10) Mercury fulminate.

(a) Test the explosive for solubility in water. Mercury fulminate is insoluble in water.

(b) Transfer 10 milligrams of the sample explosive to a fritted glass crucible of medium porosity. Extract the sample with a 20 percent aqueous solution of sodium thiosulfate, catching the washings in a 50-milliliter beaker containing 10 drops of a one percent phenolphthalein indicator solution. When the mercury fulminate is treated with sodium thiosulfate, it dissolves with formation of alkali (NaOH) which changes the color of the indicator solution from colorless to red.

(c) Transfer 10 milligrams of the sample to a 10-milliliter beaker and add three drops of concentrated hydrochloric acid solution and 2 milliliters of water. Transfer the solution to another beaker containing one drop of a five percent aqueous solution of potassium iodide. The formation of a bright red precipitate indicates the presence of the mercuric ion.

(11) Diazodinitrophenol (DDNP). Dissolve 0.05 gram of the greenish-yellow to brown explosive in acetone. Upon adding a larger volume of ice water, the explosive should appear as bright yellow crystals. Prepare a saturated solution of the explosive in 200 milliliters of water. Add to this 5 milliliters of a 20 percent solution of sodium hydroxide and mix. The evolution of a colorless gas and the appearance of a reddish-brown color in the solution indicate the explosive to be diazodinitrophenol.

(12) Lead styphnate. Wet 0.1 gram of the heavy, light orange to reddish-brown material with 10 milliliters of water and then add slowly 10 milliliters of a 20 percent solution of ammonium acetate. Agitate the mixture until solution is complete. Add 10 milliliters of a 10 percent aqueous solution of potassium dichromate. The appearance of a bright yellow precipitate indicates the presence of lead. To 0.1 gram of the explosive in a beaker add 10 milliliters of a 10 percent solution of hydrochloric acid. Heat the mixture in a steambath and evaporate to dryness. Cool the beaker and contents and add 10 milliliters of ether. Mix the contents and allow to settle. Decant or filter off the yellow ether solution and evaporate this to dryness at ordinary temperature. Dissolve the residue in 25 milliliters of water and add 0.1 gram of solid potassium cyanide. The absence of color indicates the explosive to be lead styphnate.

Digitized by Google

(13) Tetracene. Wet 0.25 gram of the fluffy, pale yellow explosive with 5 milliliters of a 10 percent solution of sodium hydroxide and warm the mixture in a steambath until solution is complete. Note if there is an odor of ammonia. Cool the solution and add 1 milliliter of a five percent solution of copper acetate. The appearance of a bright blue precipitate indicates the explosive is tetracene.

(14) Black powder. Place 0.2 gram of the black material in a 5 milliliter beaker, add 2 to 3 milliliters of distilled water, and stir for five minutes. Decant the liquid through a filter and catch the filtrate in a beaker. Evaporate this to dryness and subject the dried white solid to the tests shown in table 13-1. Dry the water-insoluble residue in the beaker, cool, and digest with two 5 milliliter portions of carbon disulfide, decanting these into an evaporating dish. Evaporate the carbon disulfide solution to dryness at room temperature. By means of a microscope, examine the yellow residue so obtained and the insoluble black residue from the carbon disulfide extraction. Note if they have the characteristic appearances of sulfur crystals and charcoal, respectively.

13-3. Chromatography.

a. *Column Liquid Chromatography.* This is the oldest form of chromatography and is sometimes called column chromatography. The equipment consists of a vertical glass or quartz column which is constricted at the lower end. The column is filled with a fine, granulated material which is most commonly silica gel but may be metal oxides (alumina), sugars, etc. This is called the stationary phase. A chemical mixture in a suitable solvent is placed in the top of the column and allowed to diffuse downward. The solvent is called the mobile phase. Vacuum is sometimes applied to the bottom of the column. The chemical components of the mixture will diffuse at different rates due to their difference in affinity for the column material. After sufficient time the components will be separated into bands along the length of the column. If the components are colored, the bands can be easily detected. Colorless or white component bands can be detected by adding a fluorescent material to the column material contained in a quartz column and irradiating with ultraviolet light. The column is then extruded from the tube and cut into bands. The separated compounds in the bands are eluted by suitable solvents and subjected to quantitative and qualitative analyses procedures. The solvent has a significant effect on the interaction between the material under test and the column material. Therefore, the proper combination of column material and solvent must be used for each material under test. Column liquid chromatography has been implemented by other modern chromatographic techniques because the procedures are time consuming and tedious.

b. *Paper Chromatography.* In paper chromatography both the stationary and mobile phase are liquids. The stationary phase liquid, which is usually water, is supported on a filter paper. A spot of the mixture to be tested is placed on the filter paper. The spot is then dried. The filter paper is then placed in a trough which contains the mobile phase. The liquid mobile phase is immiscible with the liquid of the stationary phase. The mobile phase is usually a mixture of organic solvents. The eluent is allowed to migrate either upward or downward on the paper. As the eluent migrates, the compounds in the mixture separate, each traveling with the eluent but at a different rate. After the eluent front has advanced between 15 and 30 centimeters the paper is removed from the trough and dried. A color reagent is sprayed on the paper to locate all the separated compounds. The ratio of the distance traveled by the separated compound to the distance traveled by the eluent front is then computed. In some cases the filterpaper is impregnated with hydrophobic substances such as oils or paraffins and the mobile phase is aqueous. This is called reverse phase paper chromatography. Most work with energetic material has been done using the reverse phase technique. Paper chromatography is not generally used for identification of energetic material as is thin layer chromatography.

c. *Thin Layer Chromatography.* A thin layer chromatographic plate consists of a thin layer of powdered material mixed with a binder that is applied to a smooth surface such as a glass, aluminum, or plastic sheet. The powdered material, which constitutes the stationary phase, usually consists of silica gel or aluminum oxide of uniform particle size. A solution of the mixture to be tested is spotted near the bottom of the plate. The plate is then placed vertically in a trough of solvents, called the developing solvents, contained in a closed developing tank. The level of the developing solvent in the trough is below the spot of test material. The developing solvents constitute the mobile phase. The mobile phase is drawn up into the stationary phase by capillary action. As the level of the mobile phase rises, the compounds of the test mixture are separated, each traveling with the mobile phase but at different rates. The liquid phase is allowed to rise to the desired level, usually near the top, and the plate is removed from the trough and dried. Colorless spots are detected by either spraying with a color reagent or incorporating a fluorescent material in the chromatographic plate such

Digitized by Google

000330

that exposure to ultraviolet light will cause luminescence except where spots of ultraviolet absorbing compounds are present. The rate of flow is defined as the ratio of the distance traveled by the compound to the distance traveled by the developing solvent. The rate of flow is affected by many factors such as the plate material, the developing solvent used, plate thickness, dryness of the plate, temperature, and others. Therefore compound identification is made by running the test solution on the same plate as known compounds, not by comparing the rate of flow to published data. When more than one elution is required, thin layer chromatography can be run in two dimensions. The plate is spotted near one of the corners at the bottom. Then the plate is developed normally in a developing solvent that separates the mixture into groups rather than single compounds. The plate is then dried, rotated 90° so that the separated groups are along the bottom, and placed in a second solvent trough. The second solvent separates the groups into single compounds. Thin layer chromatography is used extensively as a qualitative analysis technique. The developing solvents and plate material used vary according to the test material so no single combination of solvent and material can be used for separating all the energetic materials.

d. *Gas Chromatography*. In gas chromatography the vapor of the material to be tested is injected into a stream of inert gas such as nitrogen, and passed through a column. The carrier gas is the mobile phase, the material in the column is the stationary phase. The stationary phase can be either a solid or a liquid supported on a solid. If the stationary phase is solid the method is called gas-solid chromatography (GSC). If the stationary phase is a liquid supported on a solid then the method is called gas-liquid chromatography (GLC). Two types of columns are used in GLC; packed columns, which contain an inert nonvolatile liquid, and capillary columns, which are long, open tubes of small diameter that have a thin, liquid film on their inner surface. Capillary columns offer a greater resolution of mixture. As the carrier gas flows through the column the components of the test mixture separate, each traveling through the column material at a different rate. A detector at the end of the column detects when the gas being tested emerges. Three types of detectors are commonly used; thermal conductivity, flame ionization, and electron capture. A thermal conductivity detector detects changes in the thermal conductivity of the carrier gas. This type detector is simple and nondestructive but the sensitivity is low and the test results are highly dependent on gas temperature and rate of flow. A flame ionization detector measures the electrical conductivity of the product gases when the carrier and test sample are decomposed in an air/hydrogen flame. This type detector is destructive but more sensitive and does not have a great dependence on the gas temperature. The current carried across the product gas is proportional to the number of carbon atoms but inversely proportional to the number of oxygen and nitrogen atoms. This is the most commonly used detector. An electron capture detector uses a radioactive beta emitter to ionize the carrier gas. An electron capturing compound will remove some of the ions. The resulting decrease in the current carrying capability of the gas indicates the presence of one of these compounds. This method of detection is very sensitive to electronegative compounds, but is insensitive to compounds such as hydrocarbons which do not capture electrons. The detector output is recorded as a function of time, as shown in figure 13-1. Each peak corresponds to a compound in the mixture. There is a general correlation between the area under the peak and the content of the compound in the mixture. However, the area ratio for two compounds does not necessarily represent their weight ratio in the sample. This could be due to several reasons: difference in the detector response for different compounds, adsorption or decomposition of a compound before detection, or a faulty sampling technique. Therefore, to use the recorder output quantitatively a specific amount of a known compound is added to the sample. The sample must react similarly in the gas chromatographic unit to the unknown. Relative weight percentages can then be computed by comparing the area under the curve for the unknown and known sample. Gas chromatography is used for energetic materials, however, in some cases, application of this method is limited by the high temperature at which the test must be run. Nitroaromatics are generally stable at their boiling point, but nitramines and aliphatic nitrated esters are not. For the unstable compounds several techniques are recommended to reduce decomposition; glass rather than metal columns, short column length, lower temperatures, low polarity liquid in the GLC stationary phase, and low loading percentage of the liquid. These precautions also minimize reaction between the compounds in the column. This is a consideration when analyzing the stabilizer content of propellants as the higher temperature tends to drive off nitrogen oxides from the aliphatic nitrated ester and nitrate the stabilizer. Gas chromatography can be run isothermally or with a programed temperature change.

Digitized by Google

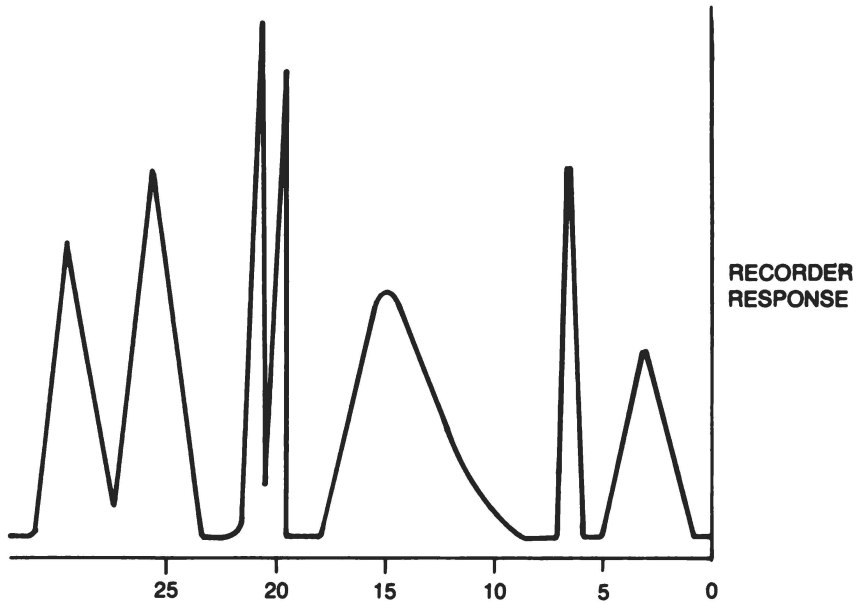

Figure 13-1. Gas chromatograph output.

e. *High Performance Liquid Chromatography (HPLC).* HPLC is also known as high speed or high pressure liquid chromatography. Separation is done in a glass or stainless steel column that is packed with a fine powdered material, usually silica. Column dimensions are usually 15 to 30 centimeters in length and three to four millimeters in diameter. The packing material, or stationary phase, consists of particles in the 5 to 10 micrometer diameter range. A solvent, the mobile phase, is pumped through the column under pressure in the range of 1,379 to 6,895 kilopascals (200 to 1,000 pounds per square inch). The test mixture to be separated is injected. Separation in the column is accomplished in the same manner as in the other forms of chromatography: the various constituents diffuse down the column at different rates. The composition of the mobile phase can be held constant (isocratic elution) or varied (gradient elution) during the procedure to improve separation. When the column material is silica, surface adsorption is the mechanism of separation. When the silica is coated with a liquid, partition between the two liquid phases is the separation mechanism. The liquids of the stationary and mobile phase must be immiscible. Normal HPLC is performed with a polar stationary phase and a somewhat nonpolar mobile phase. Reverse phase HPLC is performed with a nonpolar stationary phase and polar mobile phase. Another column material is the chemically bonded stationary phase. Silica contains free hydroxyl groups. The hydrogen can be replaced by organic compounds, although direct replacement with a carbon bond is less stable than bonding the oxygen to another silicon which is bound to the organic compound. As the mobile phase emerges from the column an ultraviolet spectrophotometer is used to detect the test material in the eluent. The detector output is plotted as a function of time. The graph obtained is very similar to the one shown in figure 13-1. The area under the peaks in the curve is proportional to the concentration of each component in the test material. A tentative identification of the compounds in the mixture can be made by comparing the graph of the output of the unknown to the graph for known compounds run under the same conditions. This identification, however, is not as specific as other methods and cannot be used in forensic work, for example, where an exact identification is required. The separated compounds can be collected and analyzed individually using one or a combination of other methods for positive identification such as mass spectrometry, infrared spectrometry, and nuclear magnetic resonance.

Digitized by Google

f. *Ion Chromatography.* Ion chromatography is instrumentally very similar to HPLC, the difference between the methods being the column material. Ion chromatography uses an ion exchange resin stationary phase which can be applied to glass microbeads for packing. While HPLC is based on absorption and partition phenomena, ion chromatography is based on the exchange of ions between the resin and the mobile phase. It is a very good technique for separating cations and anions from each other.

13-4. Polarography. Polarography measures current in microamperes, generated through the reduction/oxidation of chemical species in an electrolytic solution at an applied potential specific to the specie. A reference electrode and polarizable electrode are used. The polarizable electrode normally used is the Dropping Mercury Electrode (DME) which consists of a glass capillary filled with mercury. The mercury is allowed to drip from the capillary at a controlled rate. As a droplet forms at the end of the tube the surface area of mercury exposed to the solution increases. This causes an increase in the current conducted through the solution at any given voltage. There is a sharp decrease in the current when the drop falls. The current then increases during the formation of the next drop. Several forms of polarography are used: DC, single sweep, AC, and differential pulse. These four forms differ only in the manner in which voltage is applied between the electrodes. In DC polarography, a DC potential, which is increasing linearly at the rate of 1 to 10 millivolts per second, is applied between the electrodes. At low voltages a small current, called the residual current, flows. This current is due to charging the capacitance between the DME and the solution and miscellaneous impurities in solution. At a critical voltage depending on the chemical specie the current begins to increase with increasing voltage. The current continues to increase until a maximum current is attained, at which point further increases in voltage do not increase the current. The plot of the applied voltage versus the current is called a polarogram. The difference between the residual current and maximum current is called the diffusion current. The diffusion current is proportional to the concentration of the chemical specie. In single sweep polarography, a DC potential increasing at the rate of 100 to 500 millivolts is applied between the electrodes. The voltage is applied at a specific time during the formation of the mercury drop. The applied voltage is plotted against the current to obtain a polarogram. Single sweep polarography is more accurate than DC polarography because the shorter time frame in which the measurement is made allows less change in the surface area of the mercury drop. In AC polarography, a small AC signal is placed on the DC waveform used in DC polarography. The effects of the DC potential are electronically removed and a polarogram with peaks in the waveform is obtained. In differential pulse polarography, a pulse is applied just as the mercury drop attains maximum size. The pulse has an amplitude of 5 to 100 millivolts and a width of 50 to 60 milliseconds. The current is measured twice, just before the pulse and during the last 10 to 20 milliseconds of the pulse. The type and concentration of species present is made by comparing polarograms. Polarography is a very sensitive method of detection. Applications include pollution control and analysis of sensitive material such as primary explosives, in which sample sizes are held to a minimum because of safety considerations.

13-5. Spectroscopy and Spectrometry.

a. *Ultraviolet and Visible Spectroscopy.* In ultraviolet and visible spectroscopic techniques, a solution of the sample to be analyzed is irradiated with discreet frequencies from the entire range of either the ultraviolet or visible spectrum. To obtain a spectrum of the component, the absorbance, which is defined as the log of quotient of the intensity of the incident and transmitted radiation, is measured and plotted as a function of the frequency of the incident radiation. Usually a blank sample, which consists of only the solvent, is run at the same time so the absorbance of the solvent can be subtracted from the total absorbance of the solution. Ultraviolet and visible spectra are not generally used to identify energetic materials because they are not distinctive. However, the methods may be used for quantitative analysis. The concentration of the compound in solution is determined by measuring the absorbance of the material under test and comparing the value obtained to the value obtained for a solution of the same compound with a known concentration. The same solvent, temperature, and optical path length through the solution must be used. With a limited number of exceptions, the concentration is a linear function of the absorbance.

Digitized by Google

b. *Infrared Spectroscopy.* Infrared spectroscopy is one of the most widely used methods of identification. The technique can be used with gases, solids, or liquids. Gases or liquids are contained in cells containing salt windows, such as sodium chloride or potassium bromide, that are transparent to infrared radiation over a certain wavelength range. Solids may be in solution in which case a blank cell that contains only the solvent is tested in tandum with the material under test to compensate for the effects of the solvent. Solids may also be prepared for testing by grinding with mineral oil and placing between two sodium chloride plates or grinding with potassium bromide and pressing into a pellet. The mineral oil interferes with the spectra over a small wavelength range, but the potassium bromide does not. In the identification of an explosive ingredient, the spectrum of the unknown is examined and classified in terms of groups present in the molecule (OH; NH; C =0; N-NO_2; aromatic NO_2; C-O-C; C-O-NO_2; etc.) and then compared with the standard spectra that contain the same groups. Table 13-2, which gives spectral correlations of aromatic nitro compounds, nitramines, and nitrates, is useful for this purpose. Using infrared spectroscopy for identification depends on having a library of spectra for comparison to the spectra of unknowns. The spectra can be digitized and a computer used to search rapidly among known spectrum. Usually the programs do not identify the compound completely, but narrow the possibilities to about 10 compounds. Infrared spectroscopy is most effective when the sample is a pure compound, so separation techniques such as solvent extraction or chromatography may be used on a sample before irradiation.

Table 13-2. Spectral Correlations of Aromatic Nitro Compounds, Nitramines, and Nitrates

Structure	Band assignments, µm	Comments
sym-trinitro	9.25	Found in all *sym*-trinitro compounds examined which have the following additional groups: OC_2H_5, CH_3, OH, C_2H_5, COOH, OCH_3, NH_2. The band appears to shift to about 9.35 µm in the presence of acidic groups such as COOH or OH.
m-dinitro	10.85-10.95	Found in all *m*-dinitro compounds examined which have contained the following additional groups: CH_3, C_2H_5, OH, N =NH_2, COOH, CHO, OCH_3, CH_3NH, C_2H_5NH, NO_2 (trinitro). In the trinitro compounds the position of the band has been found from 10.75 to 11.0 µm.
	11.90-12.05	Found in *m*-dinitro compounds examined where other additional groups, if any, were ortho to the nitro. Not found in *sym*-trinitro compounds but present in 2,3,4- and 2,4,5-trinitrotoluene. Absent in 3,5-dinitrobenzoic acid and 4,6-dinitro-*o*-cresol. It appears that a group meta to the nitro inhibits the band.
o-mononitro	12.7-12.8	Found in all mononitro compounds containing any one of the following groups ortho to the nitro: CH_3, C_2H_5, CHO, NH_2, COOH. Not usually found in dinitro or trinitro compounds.
p-mononitro	9.0	Found in all mononitro compounds containing any one of the following groups ortho to the nitro: CH_3, C_2H_5, CHO, NH_2, COOH. Not usually found in dinitro or trinitro compounds.
nitramines	7.8	Found in all nitramines examined. Presumed to be caused by the N-N vibration.
nitrates	6.0	Found in all organic nitrates examined. From the analysis made of methyl nitrate it is presumed that this band is caused by the symmetrical stretching vibration of the NO_2.
	7.8	Found in all organic nitrates examined. From the analysis made of methyl nitrate it is presumed that this band is caused by the symmetrical deformation vibration of the NO_2.
	12.0	Found in all organic and inorganic nitrates.

Digitized by Google

000334

c. *Magnetic Resonance.* Two forms of magnetic resonance are used; nuclear magnetic resonance and electron spin resonance.

(1) Nuclear Magnetic Resonance (NMR). When a charged particle spins, a magnetic field or dipole is produced in a manner analogous to the magnetic field produced by current flowing in a loop of wire. An external magnetic field aligns the dipoles, either with the field or 180 degrees out of phase with the field. The out of phase position, in which the north and south poles are reversed, is referred to as against the field. Alignment with the field is more stable than alignment against the field so the application of suitable frequency electromagnetic radiation will cause the dipoles which are against the field to flip into alignment with the field. The frequency at which this occurs is called the resonant frequency. Any nucleus which has a net spin can flip, but the hydrogen nucleus is the most commonly used in NMR. The hydrogen nucleus consists of a single proton, so this method is referred to as proton magnetic resonance. The frequency at which resonance occurs depends on the nucleus and the surrounding medium. The magnetic field that is used to align the protons also changes the configurations of the electrons around the nucleus in such a way that they produce a magnetic field in the opposite direction of the externally applied field. This field shields the nucleus and must be overcome before any of the protons can be flipped. The strength of the field depends on the structure of the electrons around the nucleus. If the atom is bound into a compound and valence electrons are missing, added, or being shared, the effectiveness of the shielding is changed. This alters the resonant frequency for a given magnetic field strength or alters the magnetic field strength required to flip the protons at a given frequency. Either method of scanning, varying the magnetic field strength at fixed frequency or varying the frequency at fixed magnetic field strength, can produce an NMR spectrum. In an NMR spectrum, the resonance of tetramethlylsilane (TMS) is taken as the standard and defined as zero. All twelve of the protons (hydrogen atom nuculei) in the methyl groups are in the same chemical state, so the spectra of TMS consists of one very sharp peak. The resonance peaks in the spectra of other compounds are defined in units of chemical shift, ppm's. The chemical shift of a resonant peak is the frequency of resonance of TMS divided by the spectrometer frequency in megahertz at which the analysis is being performed. Dipoles in close proximity can cause peaks to split into doublets, triplets, etc. The difference between the lines of the multiplet in cycles per second is defined as the coupling constant, J. The value of J yields useful information concerning the positions of the protons in the molecule. The area under the spectra peak is proportional to the number of hydrogen nuclei in a given state. Chemical shift, J, and the area under the peaks provide useful analytical information. Multiple peaks in the spectrum on a single compound are caused by hydrogen nuclei which are in different states. The spectrum of PETN shows one sharp peak because all the protons are in the same chemical state. TNT, however, shows two peaks, one due to the protons in the methyl group and one due to the protons in the ring. The solvent has a considerable effect on the NMR spectrum of a sample, so standard procedures must be used. An exchange takes place between the deuteriums used in the solvent and the active hydrogens in the material under test. This can cause changes in the spectrum: line shifts, intensity shifts, and the creation of new multiplet lines. Stabilized spectra are obtained after the solution has been given enough time to come to equilibrium. This is called the development time. Careful attention must be paid to ensure that the proper development time specified in the specific procedure is used. NMR spectra of unknown compounds can be compared to those of known compounds for identification purposes, or identification can be made on the basis of the analytical information obtained.

(2) Electron Spin Resonance (ESR). This test is sometimes referred to as electron paramagnetic resonance (EPR). ESR can only be performed on samples which contain unpaired electrons. An electron has an intrinsic spin which creates a magnetic dipole along the axis of rotation. In an external magnetic field, the dipoles will align either with or against the field. By applying high frequency energy at right angles to the aligning magnetic field, the magnetic moment, and thus the direction of the electron spin, can be reversed or flipped. Alignment with the field is the preferred direction. Flipping occurs when the frequency of the incident energy is equal to the frequency of precession of the electrons. Flipping does not occur in paired electrons because the opposite spin quantum state is already occupied. Scanning is done by either varying the magnetic field strength at fixed frequency or varying the frequency at fixed magnetic field strength. The former method is preferred. ESR, while of limited applicability to the energetic material field, can be used to identify paramagnetic compounds, transition metal ions, and free radicals of organic compounds. Free radical detection has been used in pyrolysis studies.

Digitized by Google

d. *Mass Spectrometry (MS).* In mass spectrometry, molecules of the sample to be analyzed are ionized. These ions are then accelerated by an electromagnetic field. The acceleration acquired by each ion in a field of given strength will depend on the fragment's mass and charge. Most of the ions will have a charge of plus one electron unit so separation is on the basis of mass; the more massive of the ions are accelerated less than the fragments having less mass. Two types of electromagnetic fields are generally used for separation: the magnetic selector and the quadrupole. In the magnetic selector, a stream of ions is accelerated to a potential at several kilovolts and introduced into a magnetic field. The direction of the stream is at a right angle to the direction of the field. The magnetic field deflects the path of the ions into a semicircle. The radius of the semicircular path for any fragment for a given magnetic field strength is proportional to the initial or tangential velocity and inversely proportional to the magnetic field strength. A detector is placed at a point in a chosen semicircular trajectory that the ion fragments can travel. For a given initial accelerating potential and magnetic field strength, fragments of a particular mass to charge ratio will strike the detector. The spectra, plotted as a function of the mass to charge ratio, is obtained by scanning the magnetic field strength or the initial accelerating voltage. The former technique is the preferred method in low resolution mass spectrometry. High resolution mass spectrometers use both methods simultaneously to improve separation. In the quadrupole the field produced by a combination of DC and radio frequency power applied to four parallel rods is used to focus the ion fragments rather than a magnetic field. A quadrupole unit is less sensitive than a magnetic selection unit. The ions can be produced by several methods. In electron impact mass spectrometry, the sample is bombarded by electrons boiled off a hot filament.When the sample is ionized in this way organic molecules break up into fragments of various masses. The spectra obtained can be compared with a spectral library to identify unknown compounds, or analytical information from the spectra can be used to identify groups within a molecule. Electron impact of organic compounds produces many products from bond cleavage fragments to complex fragments which have undergone significant rearrangement. In chemical ionization mass spectrometry, the sample reacts with an ionizing compound to produce a positive ion. The ionizing compounds are produced by electron impact of ammonia, hydrogen, isobutane, methane, or water. The ionizing compounds produce positively charged molecules. The molecules do not fragment as much as in electron impact mass spectrometry. In negative ion mass spectrometry, electrons are absorbed by the sample molecules. Absorption may be accompanied by decomposition of the molecule into charged ions. Field ionization and field desorption mass spectrometry use high voltage electrostatic fields to produce ions. In field ionization mass spectrometry the sample in gas form is passed over a point or edge on which a potential of 10^7 or 10^8 volts per centimeter is maintained. Quantum tunneling by electrons in the gas to the high potential forms ions. In field desorption the sample molecules are absorbed, or deposited,on a surface. A strong electromagnetic field is applied to desorb the molecules as ions.

13-6. Detection and Identification of Residues.

a. Detecting and collecting the residue of explosives left after detonation is a difficult task. Detonation is a relatively complete reaction and the small amount of explosive left is scattered over a large area. The general destruction of the area also hampers the collection effort. The most likely places for the residue to be found is in the soil and other debris in the blast seat; wood, plastic, and other materials which can catch and hold the flying residue particles; and metal objects which were close to the point of detonation such as a part of the bomb. The debris from the explosion site is first microscopically examined. Many times black and smokeless powders can be identified by the shape and color of the residue. A vapor trace analyzer can be used on the debris to identify volatile explosives such as nitroglycerin. The vapor trace analyzer consists of a vapor preconcentrator and a gas chromatograph with an electron capture detector. The residue in the post detonation debris is of little chemical integrity. Solvent extraction is used to dissolve the residue for analysis. Solvent selection is important. Extraction of substances that could interfere with the subsequent analysis of the explosive is undesirable. Large amounts of solvent are used to extract even small amounts of explosive residue, so only analytical techniques which can handle trace amounts are used. The methods described in paragraphs 13-2 through 13-5 can be used. In addition X-ray diffraction patterns can be compared to patterns of known compounds for identification. Residues on hands and clothes are extracted and tested similiarly.

Digitized by Google

000336

b. Detection and identification can be made easier by adding a taggant to explosives. One taggant system which has been proposed consists of small layered particles which are laminated to increase the probability of surviving detonation. Each layer can be one of a number of colors. The sequence of colors can be decoded to determine the explosive and manufacturer. Magnetic particles and fluorescent indicators which respond to ultraviolet radiation are added to make the taggant particle easier to find after a detonation. Another taggant system which has been proposod uses layers of magnetic material with different Curie points. The Curie point is the temperature at which ferrimagnetism ceases.

13-7. Detection of Hidden Explosives.

a. Explosives can be detected using a variety of techniques. Many of the methods depend on vapor detection. Two methods, gas chromatography and mass spectrometry, have already been described. Electron capture detectors work on the same principle as the electron capture detector in gas chromatography which is discussed in paragraph 13-3d. In plasma chromatography the vapors are ionized at atmospheric pressure. An electrostatic field is applied to cause the ions to drift. Heavier ions will drift slower than lighter ones due to collisions with the inert gas at atmospheric pressure. In chemiluminescence, the reaction between ozone and NO, which produces luminescence, is used. In bioluminescence, microorganisms that luminesce in the presence of explosive vapors are used. For improved detection, two microorganisms may be used, one which gets brighter in the presence of the vapor while the other gets dimmer. In laser optoacoustic spectroscopy a modulated laser beam is tuned to the proper frequency to excite the vapors of explosives in a closed cell. The energy of the excited state is changed to translational energy through collisions with surrounding molecules. The translational energy is detected acoustically.

b. Animals, such as dogs, can also be used to detect explosive vapors. Vapor detection can be defeated with hermetic sealing. However, several methods are considered practical for detection of bulk explosives. The nuclear magnetic resonance techniques can be used. X-ray contrast can also be used. In this method gamma rays are passed through the material under test. The attenuation through the material is measured, then analyzed by a computer. Thermal neutron activation can be used to detect bulk explosives. In this method a thermal neutron is absorbed by a nitrogen-14 nucleus to produce a nitrogen-15 nucleus in an excited state. The nitrogen-15 nucleus will go to ground level by emission of a gamma ray. Neutron-nitrogen reactions can be differentiated from the neutron-other element reactions by the energy of the gamma rays produced. A system to make explosives easier to detect is to add a vapor taggant to the explosive material.

Digitized by Google

CHAPTER 14
PACKING, MARKING, STORAGE, AND SHIPMENT OF ENERGETIC MATERIALS

14-1. Introduction. The regulations governing the marking, packing, and shipping of military supplies are set forth in applicable Army regulations. These operations will also comply with Department of Transportation regulations. This chapter contains general regulations applying to the marking, packing, and shipping of explosives and ammunition. No live ammunition component that has been subjected to undue or abnormal forces for test purposes shall be offered for surface shipment by commercial carrier or be transported over public transportation systems by government conveyance except:

a. Items containing small quantities of explosive and constructed or packaged so that their explosive forces will be self-contained if they functior..

b. Explosive items which both the testing agency and the project manager or appropriate major subordinate command agree in writing can be safely transported.

14-2. Packing.

a. *General.* Explosives are packaged to safely meet a wide variety of shipping and storage situations. Storage conditions may vary from the best possible coverage to no cover at all and from extremes in climatic conditions. Figures 14-1 through 14-7 are a representative sample of explosives packaging.

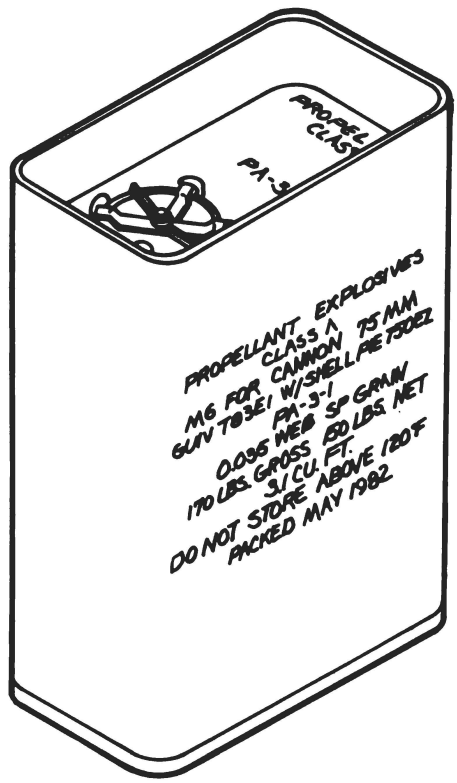

ARR82-0062

Figure 14-1. Steel box for packing solid propellants, including marking.

Digitized by Google

000338

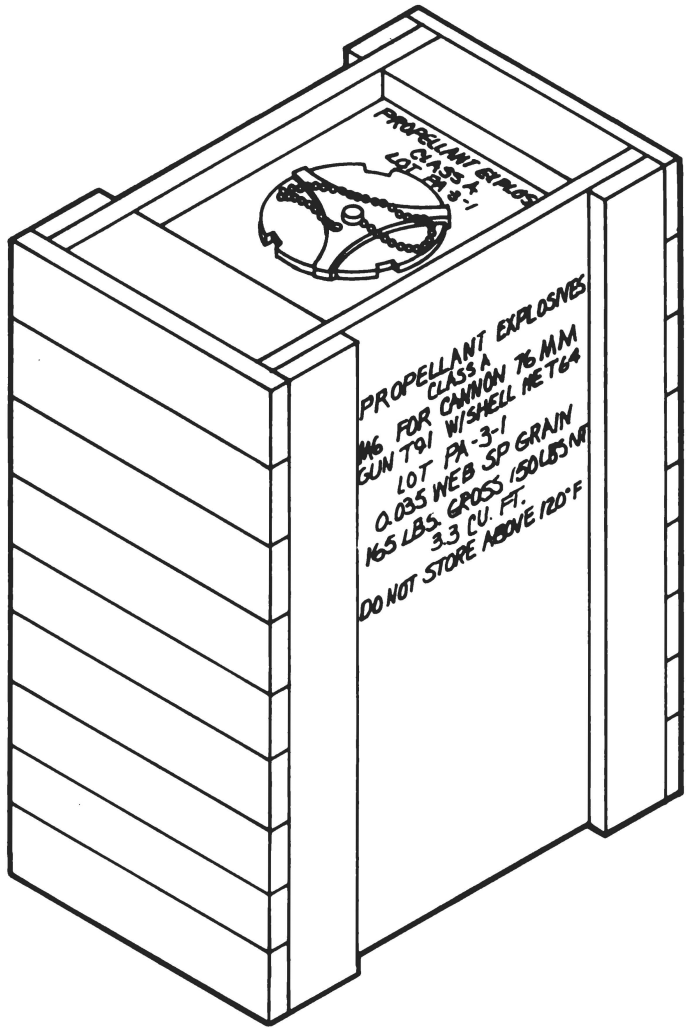

ARR82-0063

Figure 14-2. Metal lined wood box for packing solid propellants, including markings.

Digitized by Google

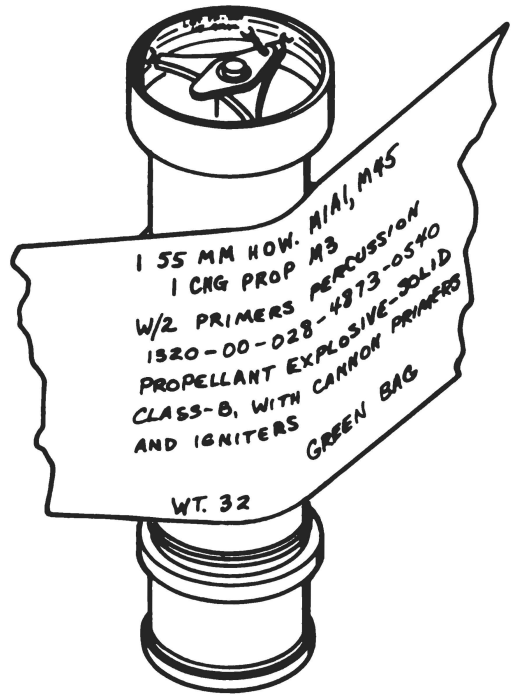

Figure 14-3. Metal containers for propelling charges, including marking.

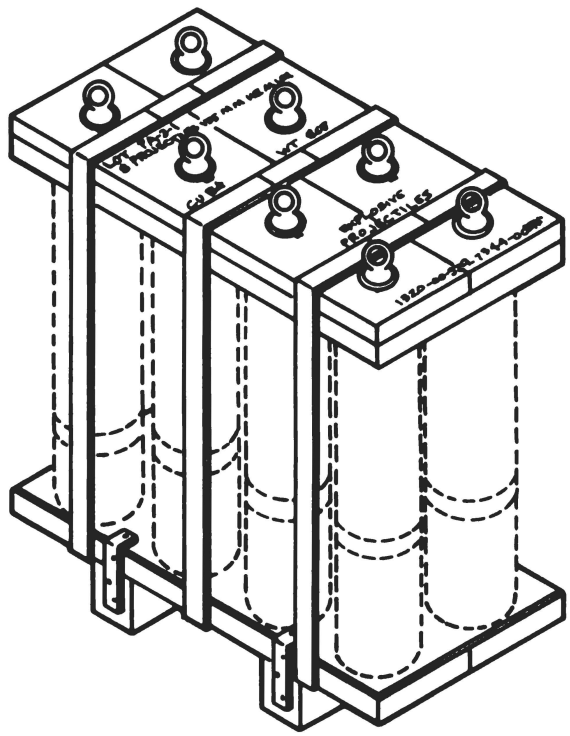

ARR82-0065

Figure 14-4. Palletized large caliber high explosive projectiles, including marking.

Digitized by Google

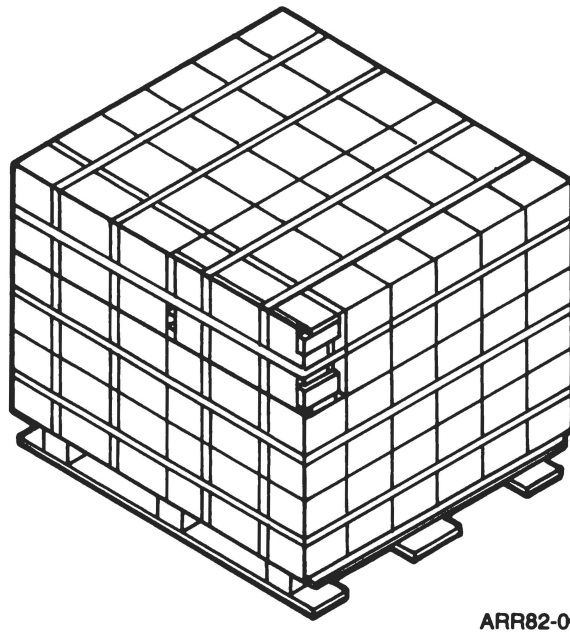

ARR82-0066

Figure 14-5. Palletized wood boxes containing explosives.

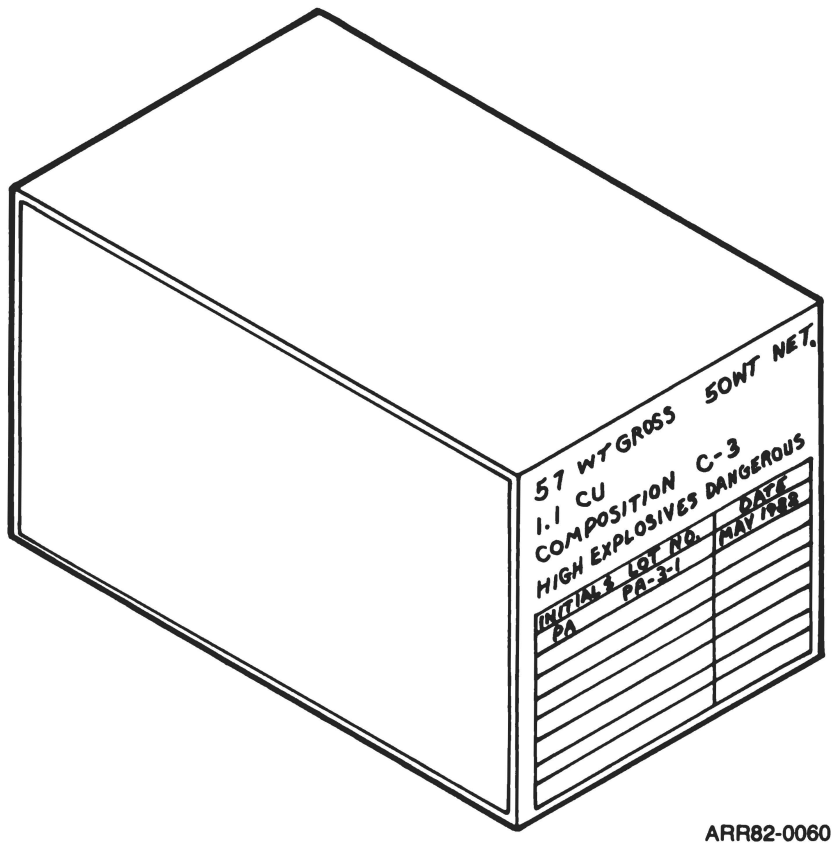

ARR82-0060

Figure 14-6. Carton for packing high explosives, including marking.

Digitized by Google

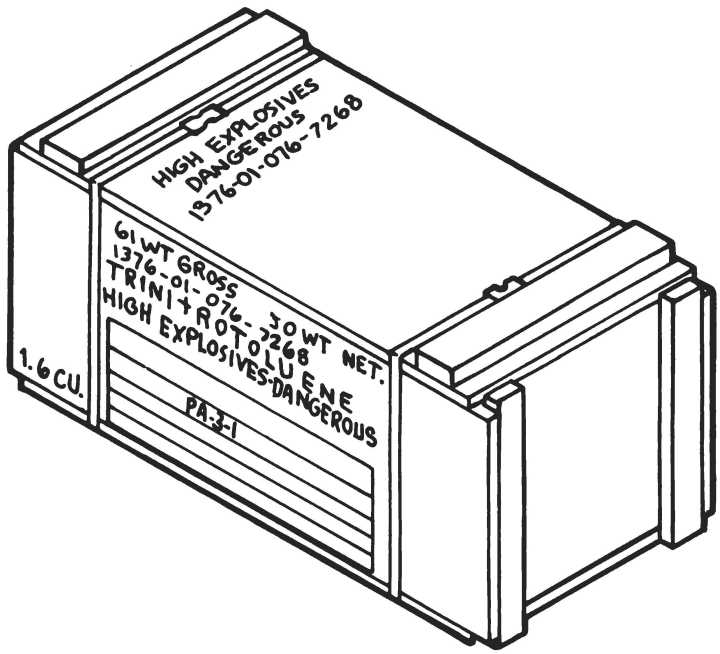

ARR82-0061

Figure 14-7. Wood box for packing high explosives, including marking.

b. *Containers.*

(1) Hazardous materials in bulk or liquid form must be transported in containers which will prevent leakage. Containers used in intraplant transportation and service storage of explosives and explosives mixtures such as initiating explosives, pyrotechnic compositions, and tracer materials should be made of material in the following order of preference:

(a) Conductive rubber.

(b) Nonferrous metal-lined boxes without seams or rivet heads under which explosive dust can accumulate.

(c) Plastics (conductive type only).

(d) Paper-lined wood boxes.

(e) Fiber drums.

(2) Fiber drums or bulk explosives and propellants should be shipped only by motor carrier or trailer-on-flat car. Glass containers should not be used because of their fragility and severe missile hazard.

c. *Black Powder Containers.*

(1) Standard containers for black powder are built in accordance with drawings that meet DOT specifications.

(2) When black powder is shipped or received each container shall be inspected for holes and weak spots, particularly holes made by small nails which are visible only upon close examination. Damaged containers must not be repaired; the contents shall be transferred to new or serviceable containers.

(3) Empty black powder containers may be reused and may be transported empty provided they are clean. Empty metal containers which are not to be reused and will be salvaged shall be thoroughly washed inside with water.

(4) Black powder containers must be carefully opened. When it is necessary to open containers by puncturing, the operation will be conducted by remote control.

d. *Containers for Solid Propellants.*

(1) Solid propellants shall be packed in accordance with approved DARCOM drawings that comply with DOT regulation (fig 14-1).

(2) Double-based solid propellants, single perforated solid propellants, and all solid propellants with web thickness not greater than 0.4826 millimeters (0.019 inch) should not be packed in all-steel boxes. Metal lined wooden boxes (fig 14-2) should be used.

Digitized by Google

(3) Salvaged or deteriorated solid propellants should be shipped water wet.

e. *Containers for Ammunition and Bulk High Explosives.*

(1) Ammunition (fig 14-3, 14-4, and 14-5) and bulk high explosives (fig 14-6 and 14-7) shall be packed in accordance with approved DARCOM drawings that comply with DOT regulations.

(2) Containers used for packing bulk high explosives should be lined with strong cloth or paper bags or liners with cemented seams to prevent sifting.

14-3. Marking.

a. Each package of explosives is marked in accordance with pertinent drawings to provide positive identification (NSN, DODAC, nomenclature, lot number, and ICC marking as a minimum).

b. Whenever explosives or ammunition containers or ammunition and ammunition components are repainted, the new painting or marking shall correctly identify contents of items. The marking of empty or inert loaded ammunition items for display purposes is governed by the provisions of AR 385-65.

c. Explosives, ammunition, and loaded ammunition components obtained from salvage operations and material which has lost its identification markings shall be clearly marked to show the explosive nature of the material. Explosive material or items which cannot be definitely identified as to their explosive nature should be disposed of by technically trained personnel in accordance with the provisions of DARCOM-R 385-100.

d. See figures 14-1 through 14-7 for a representative sample of markings required on explosives packaging.

14-4. Storage of Explosives and Ammunition.

a. *General.* The types of existing magazines listed below are considered standard for the storage of the types of items specified. New storage magazines should be of the earth covered, corrugated steel, or reinforced concrete arch type.

b. *Magazines.*

(1) Earth covered magazines. These include igloo, steel arch, Stradley, special type, hillside, and subsurface type magazines. Earth covered magazines are preferred for the storage of all items of ammunition or explosives.

(2) Standard ammunition magazines (commonly called "standard magazines"), classed as above ground magazines. These magazines were designed for the storage of fixed rounds or separate loading projectiles. For future use, they should be restricted to the storage of Classes (04) 1.2, (08) 1.2, (12) 1.2, 1.3, and 1.4 materials (excluding rockets and rocket motors). The magazines measure 15.7 by 66.6 meters (51 feet 7 inches by 218 feet 8 inches), are usually spaced 91.5 meters (300 feet) apart, and have concrete foundation walls and piers, hollow-tile walls, steel frames, and concrete floors. The storage capacity of the magazines is not stated in definite figures since the number of items which can be stored is regulated by the appropriate quantity-distance tables.

(3) High explosives and black powder magazines, classed as above ground magazines. These magazines were designed for the storage of bulk explosives such as black powder, TNT, tetryl, and explosive D and may be used for this purpose where more desirable storage space cannot be obtained. They are 8.4 meters (27 feet 6 inches) wide and 13.2 meters (43 feet 4 inches) long and are usually spaced 243.8 meters (800 feet) apart. They have concrete foundation walls and piers, hollow tile walls filled with sand, steel frames, and concrete floors covered with sparkproof mastic or the equivalent. The magazines were originally designed for the storage of 113,400 kilograms (250,000 pounds) of explosives, but in order to assure adequate aisle space for inspection and shipping and convenient height of piles, the amount of storage is usually limited to approximately 45,360 kilograms (100,000 pounds).

(4) Primer and fuze magazines, classed as above ground magazines. These magazines were designed for storing primers, primer detonators, adapters and boosters, and fuzes of all types. In the future when it is necessary to use magazines of this type, they should be restricted to the storage of Classes (04) 1.2, 1.3 (except rockets and rocket motors), and 1.4 ammunition and explosives. The magazines are 8.4 meters (27 feet 6 inches) wide, 13.2 meters (43 feet 4 inches) long and are usually spaced 91.5 to 121.9 meters (300 to 400 feet) apart. With respect to construction details, they are similar to high explosive and black powder magazines except the hollow tile walls are not sand filled and the floor is not covered with spark proof mastic.

(5) Service magazines and service storage buildings. These buildings are used for intermediate storage of the minimum amount of explosives necessary for safe and efficient manufacturing or processing operations. Construction details of such magazines should specify the use of fire-resistant materials and/or fire-resistive construction.

Digitized by Google

000343

(6) Other structures. Structures not of approved magazine type shall not be used for the storage of explosives and ammunition except when authorized by the Commander, HQ DARCOM, Attn: DRCSF.

c. *Temperature Control.*

(1) Sudden changes in temperature may damage airtight containers or may result in excessive condensation of moisture. If the temperature in a magazine exceeds 37.8°C (100°F) for a period of more than 24 hours, the magazine should be cooled by wetting the exterior of the building with water or by opening the doors and ventilators after sunset and closing them in the morning. If these methods do not prove effective in lowering the temperature, the Commander shall decide whether the materials should be removed to some other magazine.

(2) Storage magazines, in general, should not be provided with heat. Exception is made in the case of magazines where heating may be necessary to prevent condensation of moisture, to maintain constant temperature, or other reasons. If steam or hot water coils are used to heat a magazine, they must be so arranged that explosives material cannot come in contact with the coils. The coils must be kept clean.

d. *Magazine Operational Regulations.* The following regulations shall be complied with where ammunition and explosives are stored:

(1) Instructions as printed on magazine placards, DA Label 85, must be posted on or near each door of the magazine so that they are visible when work is being done in the magazine.

(2) Loose components of ammunition, packing materials, conveyors, skids, dunnage, empty boxes, and other similar material shall not be stored in magazines containing ammunition or explosives.

(3) Vegetation around all ammunition and explosives storage locations shall be controlled.

(4) Doors and locks must be kept in good working order. Magazines shall be locked at all times except when permitted operations are in progress in the magazine and as provided for in paragraph 14-4c(1). A crew must not be permitted to work in a position in a magazine which requires passing the work aisle or position of a second crew to reach an exit. The number of crews shall not exceed the number of exits. Two or more doors must be unlocked and open when personnel work in magazines having more than one door.

(5) Flammable liquids, except when used as the chemical filler of a munition or as a prepackaged storable liquid propellant, shall not be stored in magazines containing explosives.

(6) Except when required for security purposes, service magazines within an operating line need not be locked during shift operations. These magazines must be locked whenever the operating line is shut down; i.e., nights, weekends, and holidays.

e. *Stacking.*

(1) Ammunition and explosives shall be stored in containers as prescribed by approved DARCOM drawings and specifications and shall be stacked and arranged in a magazine in accordance with instructions set forth in Army regulations and approved DARCOM drawings and directives. Explosives or ammunition in stacks shall be grouped and identified according to lots. When military explosives or ammunition are not packed in accordance with approved drawings and specifications, they must be stored in accordance with special instructions from the Commander DARCOM, ATTN: DRCSF. General rules set forth in paragraphs (2) and (3) below should be followed in the absence of applicable storage drawings.

(2) Methods used for stacking must provide for good ventilation to all parts of the stack. Adequate dunnage shall be used for this purpose.

(3) Aisles shall be maintained so that units in each stack may be inspected, inventoried, and removed for shipment or surveillance tests. Block storage is permitted, provided adequate ventilation of stacks exists. Unobstructed aisles shall be maintained to permit rapid egress of personnel.

(4) Only one light box, pallet, or unit should be allowed per lot in storage. A light box, pallet, or unit is defined as a box, pallet, or unit which contains less than the normal quantity or count. Packaging and marking shall be in accordance with approved drawings and regulations. Light units shall be readily visible and immediately accessible when stacked in storage. Light units might be painted white.

f. *Permitted Open Storage.*

(1) Open storage of ammunition/explosives and limited material will not be used in lieu of covered storage employing standard facilities and/or methods.

(2) When circumstances dictate that open storage must be utilized for storage of Army owned material, the storing installation will submit a request for waiver in accordance with DARCOM-R 385-100. Requests involving material owned by another service will be forwarded through the same channel (through HQ DARCOM, ATTN: DRCSF-E) to the owning service.

Digitized by Google

000344

(3) Bulk solid propellants, bagged propelling charges, pyrotechnics, bulk high explosives, and critical items shall not be placed in open storage.

g. *Open Storage Sites.*

(1) Sites for open storage shall be separated from magazines, other facilities, and each other in accordance with the requirements of Chapter 12.

(2) The storage sites shall be level, well drained, and free from readily ignitable and flammable materials. The supporting timbers or platform upon which the ammunition is stored shall be well constructed to prevent falling, sagging, and shifting of the ammunition. In order to assure stack stability and free circulation of air, not less than three inches of dunnage should be used between the bottom of the stack and the earth floor. Provisions should also be made for circulation of air through stacks. Non-flammable or fire-resistant, waterproof, overhead covers should be provided for all ammunition containing solid propellants, torpex, tritonal, minol, or chemical agents since each of these materials may be adversely affected by exposure to the elements. An air space of not less than .45 meter (18 inches) should be maintained between the top of the stack and the cover. If adequate ventilation is assured, overhead covers are also desirable for outdoor stacks of bombs and shells. Sides of covered stacks also may be protected by non-flammable or fire-resistant, waterproof covers provided air space is maintained between the cover and the ammunition.

(3) Frequent inspections shall be made to detect sagging piles and accumulations of trash between or under stacks.

(4) If revetments are to be provided around open storage sites, they must comply with the requirements of Chapter 12. Stacks of ammunition must be kept at least 0.61 meter (two feet) from the base of the revetment and at least 0.31 meter (one foot) below the top of the revetment.

(5) Excess dunnage should not be stored between open sites and magazines nor between magazines. Excess dunnage storage sites should comply with applicable quantity-distance requirements except that during open storage operations, service supplies of dunnage may be located not closer than 15.3 meters (50 feet) from the stack being processed.

(6) Suitable types of firefighting equipment and fire symbols should be provided.

h. *Special Requirements for Open Storage.*

(1) Sites between earth covered magazines. Sites may be located midway between adjacent earth covered magazines which are 121.9 meters (400 feet) apart, provided the sites are barricaded and are separated from the barricaded sides of the nearest magazine by 56.4 meters (185 feet). Ammunition in such sites should not be stored beyond lines drawn through the fronts and backs of magazines in the same row. Barricading does not reduce the required inhabited building or public traffic route distances. The storage of Class 1.2 between earth covered magazines is not desirable and should be resorted to only when necessary. Sites containing Class 1.2 may not be located closer than the fragment distance from other open sites. The limitations of the quantity-distances listed in table 14-1 also are applicable.

Table 14-1. Special Requirements for Open Storage Between Earth Cover Magazines

Hazard class and division		Maximum kilograms (pounds) of HE		Minimum intersite distance meters (feet)		
	1.4		No limit	121.9	(400)	
(04)	1.2	45,360	(100,000)	121.9	(400)	
(08)	1.2	45,360	(100,000)	243.8	(800)	
(12)	1.2	45,360	(100,000)	365.7	(1,200)	
(18)	1.2	45,360	(100,000)	548.6	(1,800)	
	1.1	45,360	(100,000)	121.9	(400)	or fragment distance (if appropriate) whichever is greater.

Digitized by Google

(2) Sites not between earth covered magazines. Sites containing Class 1.2 shall not be stored closer than fragment distance from other sites. No open storage site shall be located within 365.7 meters (1,200 feet) of above ground magazines. The limitations of the quantity-distances listed in table 14-2 also are applicable.

Table 14-2. Special Requirements for Open Storage Between Magazines That Are Not Earth Covered

Hazard class and division		Maximum kilograms (pounds) of HE		Minimum intersite distance meters (feet)			
	1.4		No limit	30.5	(100)		
(04)	1.2		No limit	121.9	(400)		
(08)	1.2	226,800	(500,000)	243.8	(800)		
(12)	1.2	226,800	(500,000)	365.7	(1,200)		
(18)	1.2	45,360	(100,000)	548.6	(1,800)		
	1.1	45,360	(100,000)	85.3	(280)	(barricaded)	or fragment
		45,360	(100,000)	155.4	(510)	(unbarricaded)	distance (if
		113,400	(250,000)	115.8	(380)	(barricaded)	appropriate)
		113,400	(250,000)	211.8	(695)	(unbarricaded)	whichever is greater

(3) General. Inhabited building distance and public traffic route distance shall be maintained around open storage sites as specified in Chapter 12.

i. *Storage of Bulk Initiating Explosives.* Bulk initiating explosives must not be stored dry and shall not be exposed to the direct rays of the sun. Glazed earthenware crocks of ample size to hold the double bag of material with covers of the plastic cap type to prevent evaporation and eliminate friction or abrasion when removed are used for normal storage. Proper selection and use of covers is required to prevent friction and pinch points. If long term storage in shipping containers is contemplated, the container must be equipped with a cover having a port for observation of the level of liquid therein. The viewing port must be covered with a transparent plastic which is known to be compatible with the initiating explosives being stored. As an expedient only, bulk initiating explosives may be stored in shipping containers that are not so equipped, provided they are stored in frostproof, earth covered magazines, with containers on end, only one tier high, and with passageways for inspection and handling. Bags of initiating explosives in storage containers must be under distilled water. Alcohol may be added to the distilled water to prevent freezing.

j. *Solid Propellants.* Propellants shall not be stored or shipped in damaged containers. When leaking containers are discovered, an examination of the contents shall be made for the nitrous odor of decomposing propellant. If any such condition is observed, the propellant shall be segregated or properly disposed of. Propellants and propelling charges in containers should be stored so that they can be readily inspected. They shall not be exposed to the direct rays of the sun.

k. *Small Arms Ammunition.* Boxed small arms ammunition shall not be used as barricades or dividing walls between stacks of other types of ammunition.

l. *Separate-Loading Ammunition, HE Loaded Except Explosive D.*

(1) Separate-loading projectiles must be handled with care. They shall not be stored without fuze-well closing plugs. Metal dunnage should be used where practicable.

(2) Class (18) 1.2 quantity-distances are the minimum acceptable for Class (18) 1.2 items, regardless of the quantities of the HE involved. For Class (18) 1.2 separate-loading projectiles, storage must comply with DARCOM Drawing 19-48-4102-1-2-14PE1001 in order to limit distance requirements to those prescribed by the Class (18) 1.2 quantity-distance table. If those projectiles are equipped with core-recessed lifting plugs, the Class 1.1 quantity-distance table applies when the total quantity of HE involved exceeds 6,804 kilograms (15,000 pounds) in above ground magazines, even if storage complies with DARCOM Drawing 19-48-4102-1-2-14PE1001.

m. *Separate-Loading Ammunition Explosive D Loaded, Class (12) 1.2.* Except where permanent block type storage methods are used, this type of projectile may be stored with distances between stacks not more than that required to permit inspections.

n. *Fixed and Semi-Fixed Ammunition.* Boxed fixed and semi-fixed ammunition shall not be used as barricades or dividing walls between stacks of other types of ammunition.

Digitized by Google

o. *Rockets and Rocket Motors.*

(1) Whenever practicable, rockets and rocket motors that are in a propulsive state should be stored nose down. Small rockets and missiles may be stored in standard earth covered magazines without regard to direction in which they are pointed except that they will not be pointed toward the door of the magazine. If not in a propulsive state, any rocket, rocket motor, or missile may be stored in any magazine without regard to the direction in which they are pointed.

(2) In above ground magazines where nose down storage is not practicable, items (in a propulsive state) shall be pointed in the direction which offers the least exposure to personnel and property in the event of fire or explosion.

(3) Rockets should be stored in a dry, cool magazine out of the direct rays of the sun. They should not be stored in locations where temperatures exceed 49°C (120°F). Prolonged exposure of rocket ammunition to either high or low temperatures may increase the normal rate of deterioration or render the motors more susceptible to ignition if subsequently handled improperly.

14-5. Shipment of Explosives and Ammunition.

a. *General.* Explosives and ammunition are routinely shipped via all common modes of transportation, i.e., railroad, truck, ships, and aircraft. However, due to the commodities hazardous nature each of the transportation modes rigidly adheres to its own specific set of regulations.

b. *Railroad Transportation.* The operation of railroads within a DARCOM establishment shall be in accordance with applicable current directives, particularly TM 55-200, Railroad Operating Rules and this regulation.

(1) Specifications for equipment. The regulations of the Department of Transportation, the Federal Railroad Administration, and the Association of American Railroads pertaining to safety devices, safety guards, design of equipment, etc. are mandatory for railway equipment involved in transporting materials between establishments. The same regulations should be followed for inspection, maintenance, and operation of railroad equipment within an installation.

(2) Transportation of hazardous materials.

(a) In addition to the requirements of other parts of this section, the rules in subparagraphs (b) through (i) below shall be followed.

(b) When cars containing explosives or other hazardous materials are received at the installation or held in yards, precautions must be taken to prevent accidents, particularly at night. These precautions must include provisions for quickly removing and isolating the cars in case of fire.

(c) Cars loaded with hazardous materials must be loaded and placarded as prescribed by Department of Transportation regulations before being offered for transportation. The carrying of hazardous materials on locomotives or other self-propelled rail vehicles is prohibited.

(d) Before cars are moved by a locomotive, the air brake hose must be coupled and tested to assure that the air brakes are in proper working condition and the car doors shall be closed.

(e) Empty cars shall not be removed from warehouses, magazines, buildings, or loading docks until all warning placards have been removed.

(f) Special care must be taken to avoid rough handling of cars. Cars must not be "cut off" while in motion and must be coupled carefully to avoid unnecessary shocks. Other cars must not be "cut off" and allowed to strike a car containing explosives. Cars must be so placed in yards or on sidings that they will be subject to a minimum of handling and be readily removed from danger of fire. Such cars must not be placed under bridges or in or alongside passenger sheds of station, and where avoidable, engines on parallel tracks should not be allowed to stand opposite or near them.

(g) "Dropping," "humping," "kicking," or the use of the flying switch is prohibited.

(h) Adequate measures such as guarding, patrolling, and safety inspection must be provided at all times. All such activity should be under positive administrative controls.

(i) Fire symbols or DOT placards shall be placed on each railroad car while transporting explosives or ammunition within a DARCOM establishment in order to provide a ready means of identifying the potential hazard should a fire occur.

(3) Placarded railcars. Placards shall be applied in accordance with DOT regulations to railcars transporting hazardous materials. Ammunition and explosives shall be loaded and braced in accordance with approved drawings.

Digitized by Google

(4) Car inspection. A car must not be loaded with any DOT Class A explosives unless it has been thoroughly inspected by a qualified employee of the carrier who shall certify that its condition conforms to DOT regulations. After a certified car has been furnished by the carrier, the shipper or his authorized employee must, before commencing the loading of any such car, inspect the interior thereof and after loading, certify to its proper condition. A certificate will be completed and signed where applicable. Shipments of Class B explosives may be loaded in a closed car or container car which is in good condition, into which sparks cannot enter, and with roof not in danger of taking fire through unprotected decayed wood. Wood floored cars must be equipped with spark shields. Such cars do not require a car certificate but must be placarded in accordance with paragraph 14-5b(3) above.

(5) Car certificates. The car certificate printed on strong tag board measuring 177.8 millimeters × 177.8 millimeters (7 by 7 inches) or 152.4 by 203.2 millimeters (6 by 8 inches) must be duly executed in triplicate. The original copy must be filed by the carrier at the forwarding station in a separate file and the other two must be attached to the car, one to each outer side on a fixed placard board or as otherwise provided.

(6) Leaking packages. Constant alertness must be maintained to detect, through characteristic odors, the leakage of hazardous materials from faulty packages. Leaking packages should be removed from cases and repaired, or if in tank cars, the contents should be transferred. If artificial light is necessary, only electric lights approved for the hazard involved shall be used. Leaking tank cars containing compressed gases shall be switched to a location distant from habitation and highways and proper action taken for transferring contents under competent supervision. Cars containing leaking packages or leaking tank cars must be protected to prevent ignition of liquid or vapors by flame from inspectors' lanterns or torches, burning fuses, switch lights, switch thawing flames, fires on side of track, or from other sources. All unnecessary movement of a leaking car discovered in transit must cease until the unsafe condition is remedied.

(7) Car loading of items containing ammunition and explosives. Loading methods prescribed by DARCOM drawings shall be followed for the loading and bracing of railway car shipments of military explosives and ammunition. The packages should be placed in position with no more force than is needed to secure a compact load and to prevent shifting and damage en route. Excessive or violent use of mauls shall not be permitted when positioning packages.

(8) Sealing cars containing explosives and ammunition. In addition to any other seals which may be used, cars containing explosives or ammunition shall be sealed. A cable seal lock will be used to secure car doors plus an upper rail lock. Serial numbers of seals will be placed on GBL (DOD 5100.76M and AR 55-355, Chapter 13). If the seal is not in place when the car is received, the car shall be treated as suspicious and shall be inspected. See AR 55-38 for instructions on recording details when shortage, pilferage, or apparent theft is involved.

(9) Inspection of cars before unloading.

(a) Rail cars containing explosives and ammunition entering a DARCOM establishment must be inspected. This inspection comprises the examination of the outside and under side of each car for damage such as defective brakes, couplings, wheel flanges, etc; to detect unauthorized and suspicious articles; to check correctness of individual car numbers and seal numbers against bills of lading. When the probability of sabotage is remote, such inspections may be accomplished from ground level without the aid of an inspection pit to discover unsafe structural and mechanical deficiencies of the car. During periods of emergency when sabotage may be attempted, and also to aid in the rapid inspection and movement of cars, an inspection pit should be provided.

(b) Cars of ammunition or explosives on which foreign and suspicious articles have been secreted or attached outside or underneath the car, or cars which show a defect that might affect the installation or contents of the car, shall be removed to the suspect car siding for additional inspection. In addition, during the times of national emergency, cars on which the seal numbers do not correspond to those shown on the bill of lading shall be treated as suspect cars and should be removed to the suspect car siding for additional inspection.

(c) Cars which satisfactorily pass the inspection outlined above may be considered reasonably safe but care must be exercised in breaking car seals and opening car doors because of the possibility of damage or shifting lading, leaking containers, etc. When the quantity and class of ammunition present in the classification yard does not exceed that permitted by the appropriate quantity-distance table, based on distance to adjacent targets, cars may be opened for inspection at that point, otherwise interior inspection should be accomplished after the cars have been spotted at the unloading point.

Digitized by Google

000348

(10) Inspection of cars after unloading. Cars in which explosives or ammunition are received shall be inspected after unloading to see that they are clean and free from loose explosives or other flammable materials, and that the placards and car certificates are removed. Explosives sweepings shall be destroyed.

(11) Damaged shipment. Any shipment received in a damaged condition as a result of inadequate or improper blocking and bracing or not loaded in accordance with appropriate DARCOM drawings shall be reported on Discrepancy Shipment Report (SF 361) in accordance with AR 55-38. If the damage was due to improper preservation, packaging, or packing, SF 364 (Report of Discrepancy) will be prepared in accordance with AR 735-11-2.

c. *Motor Vehicle Transportation.* The operation of motor vehicles within a DARCOM installation shall be in accordance with this and other applicable current regulations.

(1) Motor vehicle safety program. Current regulations, particularly AR 385-10, Army Safety Program, require the institution of a motor vehicle safety program as part of the overall safety program of a DARCOM installation. AR 385-55, Prevention of Army Motor Vehicle Accidents, contains detailed information for inclusion in such a program. Other pertinent regulations are AR 55-162, AR 55-203, AR 55-355, AR 55-357, AR 735-11-2, and AR 55-38.

(2) Motor vehicle shipment regulations. Motor vehicle shipments on public highways are governed by the Department of Transportation regulations. All motor vehicle shipments from a DARCOM installation shall comply in full with the applicable portions of DOT, state, and municipal regulations except as provided for in these regulations. Before any motor vehicle designated for movement over public highways may be loaded with ammunition or explosives (DOT Class A or B) and other dangerous articles, as specified in chapter 216, Section II, AR 55-355, the vehicle must be inspected and approved by a qualified inspector for compliance with AR 55-355 (DD Form 626) Motor Vehicle Inspection. After loading, lading must be inspected and approved. Driver selection, training, etc., for intraplant shipping and for operation of government owned trucks on public highways shall be in accordance with pertinent requirements of 49 C.F.R. Parts 390-397, Federal Motor Carrier Safety Regulations, FM 55-30, Army Transportation, Units and Operations, and FM 21-305, Manual for the Wheeled Vehicle Driver.

(3) Motor vehicle for explosives shipment. Cargo type trucks and truck-tractor drawn semitrailer vans are the preferred means for transporting ammunition, explosives, and other hazardous material. Other types of trailers should not be used by DARCOM installations for this purpose except where the material is sufficiently large to make handling by vans impractical (this restriction need not apply to licensed common carriers and contract equipment). Equipment used for transporting ammunition, explosives, and other hazardous material must meet the following requirements and these should be supplemented by local regulations as deemed necessary by the commander.

(a) Loading methods prescribed by DARCOM drawings shall be followed for the loading and bracing of motor vehicle shipments of military explosives and ammunition. The packages should be placed in position with no more force than is needed to secure a compact load and to prevent shifting and damage en route. Excessive or violent use of mauls shall not be permitted when positioning packages.

(b) Special precautions must be taken to avoid ignition of the material by the exhausts of automotive vehicles.

(c) The lighting system shall be electric. Batteries and wiring shall be so located that they will not come into contact with containers of explosives, ammunition, or other hazardous material. If exposed explosives or flammable vapors are encountered in a vehicle, only approved type portable lights should be permitted (certified by a nationally recognized testing organization for the specific hazardous location as defined by the National Electric Code).

(d) The interior of the truck body shall have all exposed ferrous metal covered with nonsparking material when transporting scrap and bulk explosives in containers which may be damaged and explosives become exposed. If the explosives transported consist of ammunition or explosives packaged for shipment in accordance with DOT specifications, it will not be necessary to cover the ferrous metal. Open body vehicles other than the flatbed trailer type used to transport large items such as rockets or missiles must have sides that are strongly made and securely fastened so that the items are safely retained. Where a top is required, it should be of a noncombustible or flame-proof material. Whenever tarpaulins are used for covering explosives, they will be secured by means of rope or tiedowns. Nails will not be used to fasten protective tarpaulins.

Digitized by Google

(e) All trucks (government and commercial) destined for offpost shipment over public highways shall be equipped with one (1) Class 10-BC rated portable fire extinguisher when transporting DOT Class A, B, or C explosives. Government motor vehicles involved only in on-post shipments shall be equipped, as a minimum, with two (2) Class 1-BC rated portable fire extinguishers; one mounted outside the cab on the driver's side of the vehicle and the other inside the cab. If government vehicles are equipped with an interior carbon dioxide or dry powder flooding device, only one extinguisher is required and should be mounted on the outside of the cab on the driver's side.

(f) Red lights are not permitted on the front of vehicles transporting explosives and ammunition.

(g) Trucks fueled with LP gas shall not be used to transport ammunition and explosives in ammunition areas.

(4) Inspection of vehicles. Government owned motor vehicles used for transportation of hazardous materials shall be inspected at frequent intervals by a competent person to see that mechanical condition and safety devices are in good working order and that oil and motor pans under engines are clean. Because of vehicle usage, this requirement is over and above the inspection requirements of TM 38-750. Daily inspection shall be made by operators to determine that:

(a) Fire extinguishers are serviceable.

(b) Electric wiring is in good condition and properly attached.

(c) Fuel tank and piping are secure and not leaking.

(d) Brakes, steering, and other equipment are in good condition.

(e) The exhaust system is not exposed to accumulations of grease, oil, gasoline, or other fuels, and has ample clearance from fuel lines and other combustible materials.

(5) Mixed loading. The types of hazardous materials that may be loaded and transported together over public highways are established in 49 CFR 177.835(c) and 177.848. These DOT requirements shall be complied with for shipments over public highways.

(6) Instruction to drivers. Before motor vehicles loaded with hazardous materials leave a DARCOM establishment, drivers shall be informed of the nature of their cargo and methods of fighting fires involving the truck or its cargo. DD Form 836 (Special Instructions for Motor Vehicle Drivers) will be completed in accordance with the requirements of AR 55-355 and furnished such drivers. The provisions of TB 38572, Nuclear Weapons - Fire Fighting Procedures, shall be applied, when applicable.

(7) Inspection and movement of incoming shipments.

(a) Motor vehicles loaded with explosives, ammunition, or other hazardous materiel shall be carefully inspected by a competent person at a designated inspection station in accordance with AR 55-355 using DD Form 626. The inspection station should be located remotely from hazardous and populated areas.

(b) When inspection reveals that an incoming tractor is in an unsatisfactory condition, it should be disconnected from the trailer (at the inspection station) and moved to a position where it will not endanger any explosives.

(c) When inspection reveals that the trailer or its load is in an unsatisfactory condition, it shall be removed to a location which is at least inhabited building distance (not less than fragment distance for fragment producing items) for the material involved from inert and administration areas, hazardous locations, and the installation boundary. At this location, correction of unsatisfactory conditions shall be accomplished prior to movement to the destination of the vehicle within the installation. The route when moving from the inspection station to the isolated locations, insofar as possible, should be removed from built-up areas and areas where personnel concentrations are high.

(d) Vehicles which cannot be dispatched immediately to points where they are to be unloaded may be moved to a holding yard which shall be sited in accordance with paragraph 12-11l.

(e) Incoming or outgoing ammunition and explosives loaded trailers that cannot be exchanged directly between the carrier and the DARCOM installation may be moved in to interchange yard. Quantity-distance provisions do not apply provided the trailers are moved expeditiously from the interchange yard. At least 3.048 meters (10 feet) separation should be maintained between trailers in an interchange yard.

(8) Damaged shipments. Any shipments received in a damaged condition as a result of inadequate or improper blocking and bracing or not being loaded in accordance with appropriate DARCOM drawings shall be reported on Discrepancy Shipment Report (SF 361) in accordance with AR 55-38. If the damage was due to improper preservation, packaging, or packing SF 364 (Report of Discrepancy) will be prepared in accordance with AR 735-11-2.

Digitized by Google

d. *Air Transportation.* The carriage of ammunition, explosives, and other hazardous materials by civil aircraft is regulated by the DOT. See 49 CFR 106-178, particularly Part 175. Criteria for the preparation and carriage of hazardous materials on military aircraft and certain Department of Defense contract airlift operations conducted under DOT Exemption 7573 are contained in TM 38-250.

(1) Military aircraft operating regulations.

(a) Operation of military aircraft shall be in accordance with requirements outlined in the applicable flight envelope, Army and/or Air Force regulations, and as further required by locally established regulations.

(b) If an aircraft carrying dangerous articles makes a forced landing and only minor repairs are necessary, the cargo need not be unloaded but repairs should be accomplished at a location separated from dissimilar exposures and other aircraft by the appropriate inhabited building distance for the cargo aboard. For major repairs, the plane shall be unloaded and the cargo stored in accordance with appropriate quantity-distance requirements. Appropriate protection should be afforded the cargo during inclement weather. If a landing is made for refueling purposes only, the cargo need not be unloaded. Refueling shall be accomplished at a location suitable for the performance of minor repairs as described above.

(c) Prior to take off or landing, the pilot must contact the tower for taxi, take off, or landing and parking instructions. The pilot shall, when requesting instructions, make known the contents of the cargo and shall request priority for his aircraft.

(d) When an aircraft containing ammunition or explosives is parked on a DARCOM installation in a designated, restricted, posted, and traffic controlled explosives parking or loading and unloading area, fire symbols will be posted at all normal approaches to the designated area. If parked in an area on a DARCOM installation which is not a designated, restricted, posted, and traffic controlled explosives parking or loading and unloading area, fire symbols will be placed at the nose, tail, and each side of the aircraft. Where the height of the aircraft does not readily permit attaching the fire symbols to the aircraft, the fire symbols may be mounted on stands approximately 1.5 meters (five feet) in height positioned adjacent to the aircraft where they are visible at long range. At other DOD installations and at non-DOD installations, placarding will be in accordance with the requirements of TM 38-250 and the requirements of the host installation.

(2) Permissible air shipments. Hazardous materials that may be shipped by civil air are identified in 49 CFR 172.101 along with the maximum net quantities per package and in Chapter 4 of TM 38-250 for shipments by military aircraft. External or internal transportation of electrically initiated explosive loaded items or components by helicopter will not be permitted without prior approval from the Commander, DARCOM. Packages must conform to the requirements of DOT regulations. Dangerous articles and other cargo must be firmly lashed to the aircraft structure or otherwise secured to prevent shifting in flight. Signalling devices, equipment necessary to promote safety in operations, small arms equipment in moderate quantities for personal use, and other items as permitted in Title 49 CFR part 175.10 may be carried without complying with the above requirements. Dangerous articles must be placed in a baggage compartment inaccessible to passengers during flight.

(3) Loading and unloading aircraft.

(a) Prior to loading or unloading ammunition, explosives, and other hazardous materials, the aircraft shall be electrically grounded so that the resistance to ground does not exceed 10,000 ohms.

(b) When loading or unloading aircraft containing ammunition or explosives, placards and fire symbols will be displayed as indicated in paragraph 14-5d(1)(d).

(c) Loading and unloading shall be done in accordance with quantity-distance requirements (para 14-5d(1)(b).

(d) All ignition switches must be in the off position.

(e) Front and rear wheel chocks shall be in place.

(f) Military aircraft shall be loaded in accordance with AR 95-16, "Weight and Balance: Army Aircraft". Nonmilitary aircraft shall be loaded to comply with Civil Air Regulations.

(g) Nonmilitary airfields used for loading and unloading explosives will be provided with aircraft firefighting service equal to Army standards.

(h) At nonmilitary airfields used by US Army Flight Activities, aircraft rescue and fire protection is normally provided by the host. If protection provided by the host does not meet the standards established in AR 420-90, Fire Prevention and Protection, and the DARCOM supplement to AR 420-90, Army fire department personnel and/or auxiliary firefighters will be used during periods of Army flight activities, including loading and unloading of explosives.

Digitized by Google

000351

(i) In addition to protection provided by the host, protection will be furnished through use of portable fire extinguishers by operating agency personnel trained as auxiliary firefighters.

(j) As a minimum, four portable fire extinguishers should be available for firefighting purposes during all loading and unloading of explosives. Recommended extinguishers are: two each pressurized water type extinguishers, utilizing Aqueous Film-Forming Foam (AFFF) liquid concentrate, six percent, MIL-F-24385, and two each Potassium Bicarbonate Base Dry Chemical Extinguisher, 13.6 kilograms (30 lb) capacity.

(4) Damaged shipments. Air shipments of explosives or ammunition received at a DARCOM establishment in a damaged condition or not loaded in accordance with applicable requirements shall be reported on Discrepancy in Shipment Report (SF 361) in accordance with AR 55-38 "Reporting of Transportation Discrepancies in Shipments." If damage was due to improper preservation, packaging, or packing, SF 364 (Report of Discrepancy) will be prepared in accordance with AR 735-11-2.

(5) Containers. Containers of explosives in aircraft shall not be opened or repaired.

e. *Water Transportation.*

(1) Transportation of explosives, ammunition, and other hazardous materials by water in vessels engaged in commercial service is regulated by the United States Coast Guard. Shipments overseas shall be made in accordance with the regulations of the carrier, the United States Coast Guard, or Department of the Army. (See AR 55-228, Transportation by Water of Explosives and Hazardous Cargo and TM 55-607 [Navy NAVSEA OP 3221 Rev. 1]. Loading and Stowage of Military Ammunition and Explosives Aboard Breakbulk Merchant Ships). Where route of travel requires passage under bridges, prior authorization from the responsible agency shall be obtained.

(2) Damaged shipments or shipments not stowed in accordance with pertinent regulations when received at a DARCOM establishment shall be reported on Discrepancy in Shipment Report (SF 361) in accordance with AR 55-38. If damage was due to improper preservation, packaging, or packing, SF 364 (Report of Discrepancy) will be prepared in accordance with AR 735-11-2.

(3) Containers of explosives and ammunition shall not be opened or repaired onboard a vessel except as required for dumping at sea or servicing weapons.

(4) Vessels in which explosives or ammunition are received shall be inspected after unloading to see that they are clean and free from loose explosives or other flammable materials and that warning placards, etc., are removed. Explosives sweepings will be destroyed.

Digitized by Google

000352

CHAPTER 15
DISPOSAL, DESTRUCTION, DECONTAMINATION, AND DEMILITARIZATION OF ENERGETIC MATERIALS

15-1. Introduction. Most energetic materials cannot be safely disposed of by dissolving in solution and eliminating as sewage because they are insoluble in water, are generally toxic, and are hazardous to the environment. Disposal must be by burning, detonation, or chemical decomposition. The instructions in this chapter are for destroying limited quantities of explosive, pyrotechnic, incendiary, and smoke materials normally encountered during daily operations in laboratories, manufacturing plants, and storage facilities. When larger quantities are destroyed or reclaimed, special instructions will be furnished by the US Army Armament, Munitions, and Chemical Command (AMCCOM)/US Army Materiel Development and Readiness Command (DARCOM). When destruction is authorized, the provisions of all current applicable Army directives must be observed.

15-2. Disposal. Methods for destruction are generally based on the quantity and nature of materials to be destroyed, the facilities available, and the topography of the land. Destruction of explosive materiel will be accomplished by burning or detonation. The only exception to this policy is made in the case of small quantities of explosives which can be destroyed by chemical means as specified in paragraph 15-4. Burying energetic materials in the ground or dumping in waste places, pits, wells, marshes, shallow streams, rivers, inland waterways, or deep sea is absolutely prohibited. Existing locations, if known, of buried explosives and other energetic materials shall be appropriately marked with permanent type signs and measures shall be taken to prohibit unauthorized personnel from entering the area. Existing records identifying the type and quantity of energetic materials buried shall be maintained and the burial area shall be noted on installation drawings. Explosives which are dangerously deteriorated or cannot be definitely identified shall be destroyed by an approved method. Destruction shall not be undertaken without prior approval unless the organization or installation commander decides that immediate destruction of deteriorating explosives is necessary for the protection of life and property. All deteriorated materials thus destroyed must be accounted for, since Army regulations pertaining to the disposal of excess and surplus property apply to the destruction of such unserviceable property. Prior approval for destruction of routine waste is not required. Compliance with applicable federal, state, and local environmental restrictions and permits is mandatory. Review of all SOPs for destruction of energetic materials by the Installation Environmental Coordinator is mandatory.

15-3. Destruction by Burning or Detonation.

a. *Destruction Sites.*

(1) Site selection, physical security, personnel training, emergency equipment, and procedures are governed by applicable federal, state, and local environmental regulations, particularly applicable hazardous waste regulations, and by the safety considerations which follow. Open burning and open detonation operations will be conducted in accordance with applicable air, hazardous waste, and other environmental permits. The site selected for the destruction of explosives and other energetic materials shall be located at the maximum practicable distance from all magazines, inhabited buildings, public traffic routes, and operating buildings but not less than 732 meters (2,400 feet) unless pits or similar aids are used to limit the range of fragments and debris. In all disposal and destruction activities, the quantity of explosives that may be destroyed safely at one time shall be determined carefully by starting with a limited quantity and then gradually increasing that quantity until the optimum amount consistent with safe and efficient operation is determined. When trials prove that fragments and debris are limited to lesser ranges, the appropriate inhabited building distances may be used. Sites must also be located in relation to the direction of prevailing winds so that sparks will not be blown toward explosives location. Where possible, natural barricades shall be utilized between the site and operating buildings or magazines. When destroying explosives by burning, the possibility that the mass may detonate must be recognized and appropriate protective barriers or distance separation should be used to protect personnel and property. Open air burning and detonation of explosives and pyrotechnics for demilitarization is prohibited between sunset and dawn.

Digitized by Google

000353

(2) Dry grass, leaves, and other extraneous combustible material in amounts sufficient to spread fire shall be removed from a 200 foot radius from the point of destruction. The grounds should be of well packed earth and shall be free from large stones and deep cracks in which explosives might lodge. Explosive materials shall not be burned or detonated on concrete mats.

(3) Fire-fighting facilities shall be readily available to extinguish brush or grass fires and, if necessary, to wet down the ground between burnings and at the close of each day's operations.

(4) Ordinary combustible rubbish, explosives, and explosives contaminated material shall be destroyed at separate locations. Where limited space does not permit separate burning areas, part of the explosives destruction ground may be reserved for burning rubbish provided the two areas are not operated simultaneously, and the area where rubbish has been burned is wetted down and inspected before explosives burning is resumed. Combustible material should be burned in an incinerator complying with National Fire Protection Association Standard No. 82 or in a substantial, wire-mesh enclosure (not over three-fourths inch openings).

(5) The demolition area or burning ground shall be serviced with telephones or two-way radio communication. A charge house serviced with electricity is desirable.

b. *Explosives Material Awaiting Destruction.* Explosives material awaiting destruction shall be stored at not less than intraline distance, based on the largest quantity involved, from explosives being destroyed. The material shall be protected against accidental ignition or explosion from fragments, grass fires, burning embers, or detonating impulse originating in materials being destroyed.

c. *Personnel Protection.*

(1) Operational shields with overhead and frontal protection will be provided to protect personnel. Where circumstances warrant their use, complete personnel protection shall be provided. Such structures should preferably be located at the appropriate inhabited building distance for the quantity and type of materials being detonated but in no case will this distance be less than 300 feet. Employees must use such protection when explosive materials are destroyed by detonation or when explosive materials which may detonate are being burned. When Class 1.3 material is being destroyed by burning, personnel must remain at the greatest practicable distance from the burning site but in no case shall personnel be permitted closer than the applicable public traffic route distances.

(2) During disposal and destruction operations, the number of people in the area exposed to the hazard must be kept to a minimum. Warning signs or road blocks shall be posted to restrict the area and to ensure proper segregation of activities. At least two people are needed in disposal and destruction operations and operations shall be arranged so that not all of the personnel are exposed to an incident. Personnel engaged in burning explosives should be provided with flame resistant clothing.

d. *Supervision and Training.*

(1) The disposal area and its operations shall be under the direct control of an experienced, trained supervisor responsible for all activities within the area. The supervisor shall be present during all burning and demolition ground operations. During the supervisor's absence, a competent qualified person will be in charge. The alternate shall have sole custody of all ignition devices. Prior to actual burning or detonation of explosives, all personnel including the demolition ground supervisor will be evacuated to a safe distance or protective structure affording adequate protection but consistent with the need to monitor the total operation until it is complete.

(2) Personnel employed at the destruction area shall be thoroughly trained regarding the nature of the materials handled, the hazards involved, and the precautions necessary. The danger of using unapproved, improvised methods and other deviations must be thoroughly instilled in the minds of the employees. It is essential that thorough training and vigilant supervision be provided.

(3) In the absence of specific regulations covering any phase of the destruction of explosive material, complete information will be forwarded through command channels to the Commander, DARCOM, ATTN: DRCSF, requesting instructions and guidance.

e. *Containers for Waste Explosives.* Explosives destined for the burning ground shall be in original closed packages or in containers of fire-retardant materials which will not contribute to the existing hazard by readily producing sparks when contacting rocks, steel, or other containers. Bags or containers made from easily ignited material shall not be used. Containers shall have closures that will prevent spilling or leakage of contents when handled or if overturned. Closures shall be of a type that will not pinch or rub explosives during closing and opening. The closures and surfaces of containers openings shall be thoroughly cleaned of explosive contamination to minimize the hazard during closing or opening.

Digitized by Google

000354

f. *Servicing of Destruction Site.*

(1) Trucks transporting explosive material to burning or demolition grounds shall meet the requirements of Chapter 14. No more than two persons shall ride in the cab.

(2) Upon arriving at a burning or demolition ground, trucks may distribute explosives containers or explosives items to be destroyed at sites where destruction is to take place. As soon as all items have been removed, trucks shall be withdrawn from the burning or demolition area to a safe location until destruction is completed. Containers of explosives shall not be opened until the truck has been withdrawn

(3) Containers of energetic materials items to be destroyed at the destruction site shall be spotted and opened at least 10 feet from each other and from explosives material previously laid for destruction to prevent rapid transmission of fire in event of premature ignition.

(4) Empty containers shall be closed and moved a sufficient distance away to prevent charring or damage during burning of the explosives. Empty containers may be picked up by truck on the return trip after delivery of the next quantity to be destroyed.

(5) When materials being processed at destruction sites are to be handled by gasoline or diesel powered fork lift truck, the requirements of Chapter 12 will be observed. All such material handled will be properly packaged and must not be contaminated with explosives.

g. *General Burning Requirements.*

(1) Except in specific cases, energetic materials shall not be burned in containers.

(2) Bulk initiating explosives and others used predominantly in detonators and photoflash compositions shall be destroyed by detonation except that small quantities (not exceeding 28 grams) may be decomposed chemically.

(3) Loose explosives, other than initiating explosives, may be burned in beds not more than three inches deep. Wet explosives may require a thick bed of readily combustible material such as excelsior underneath and beyond to assure that all the explosives will be consumed once the materials are ignited. From the end of the layer of explosives the combustible material should be extended in a train to serve as the ignition point. When an ignition train of combustible material leading to the explosives is used, it must be arranged so that both it and the explosives burn in the direction from which the wind is blowing. The combustible train of the explosive, if ignited directly, must be ignited by a safety fuse of a length which will permit personnel to withdraw safely to the protective shelter, or by black powder squib initiated by an electric current controlled from a distance or structure which assures safety to personnel should the total quantity of explosives detonate. In some cases, it may be necessary to tie two or more squibs together to assure ignition of the combustible train. When a misfire occurs, personnel shall not return to the point of initiation for at least 30 minutes. Not more than two qualified persons shall be permitted to examine the misfire.

(a) Loose, dry explosives may be burned without being placed on combustible material if burning will be complete and the ground does not become unduly contaminated. The ground must be decontaminated as frequently as is necessary for the safety of personnel and operations. Qualified inspectors shall examine the sites after each burning to determine if these requirements are met. Volatile flammable liquids shall not be poured over explosives or the underlying combustible material to accelerate burning, either before or during the burning of materials.

(b) Wet explosives shall not be burned without first preparing a bed of nonexplosive combustible material upon which the explosives are placed to assure complete burning. It is usually necessary to burn RDX wet to prevent detonation.

(c) Pyrotechnic materials collected as described in paragraph 15-5h(3) may be burned, except as noted below, by emptying the containers or buckets containing the oil and pyrotechnic mixture into a shallow metal pan and igniting as described above. The opened containers may be burned with the explosives. Burning of colored smokes and WP and HC mixes requires specific authorization of the Commander, AMC, ATTN: AMCSF.

(4) Parallel beds of explosives prepared for burning shall be separated by not less than 45.7 meters (150 feet). In repeated burning operations, care must be taken to guard against material being ignited from smoldering residue or from heat retained in the ground. Burnings shall not be repeated on previously burned-over plots for 24 hours unless the burning area has been thoroughly soaked with water and an inspection of the plot by competent personnel has been made to assure the safety of personnel during a subsequent burning operation.

(5) Some types of explosives and tracer or igniter compositions give off toxic fumes when burned Proper protective respiratory equipment, such as hose masks, airline masks, and self-contained breathing apparatus shall be worn where such fumes are likely to be encountered.

Digitized by Google

h. *Materials for Detonating Explosives.*

(1) Detonation of explosives should, where practicable, be initiated by electric blasting caps using blasting machines or permanently installed electric circuits energized by storage batteries or conventional power line. Improvised methods for exploding electric blasting caps shall not be used. When items to be detonated are covered with earth, as specified in paragraph 15-3i(1), blasting caps shall not be buried beneath the ground level with the initiating charge. The initiating explosives should be primed with primacord of sufficient length to reach up through the covering to a point where the blasting cap may be connected above the ground level.

(2) Special requirements for using electric blasting caps and electric blasting circuits:

(a) Electric blasting caps, other electric initiators, electric blasting circuits and the like may be energized to dangerous levels by extraneous electricity such as: static electricity, galvanic action, induced electric currents, high tension wires, and radio frequency energy from radio, radar, and television transmitters. Safety precautions shall be taken to reduce the probability of a premature initiation of electric blasting caps and explosives charges.

(b) The shunt shall not be removed from the lead wires of the blasting cap until the moment of connecting them to the blasting circuit, except during electrical continuity testing of the blasting cap and lead wires. The individual who removed the shunt should ground himself or herself by grasping the firing wire prior to performing the operation in order to prevent accumulated static electricity from firing the blasting cap.

NOTE

After electrical continuity testing of the blasting cap, the lead wires must be short-circuited by twisting the bare ends of the wires together immediately after testing. The wires shall remain short circuited until time to connect them to the blasting circuit.

(c) When uncoiling the lead wires of blasting caps, the explosives end of the cap should not be held directly in the hand. The lead wires should be straightened out as far as necessary by hand and shall not be thrown, waved through the air, or snapped as a whip to unloosen the wire coils. Avoid loops by running lead wires parallel to each other and close together. If loops are unavoidable, keep them small. Keep wires on the ground in blasting layouts.

(d) Firing wires shall be twisted pairs. Blasting circuit firing wires shall at all times be twisted together and connected to ground at the power source and the ends of the circuit wires where blasting cap wires are connected except when actually firing the charge or testing circuit continuity. The connection between blasting caps and circuit firing wires must not be made unless the power end of the circuit lead (firing wires) are shorted and grounded. The following methods should be followed when connecting electric type blasting cap lead wires to the firing circuit wires:

1 Check wires leading to the blasting machine for continuity and stray currents.

2 Test electric blasting cap wires for electrical continuity, and after the test, connect to wires leading to the blasting machines.

3 Evacuate all but two persons from the area. Place cap into charge to be detonated.

4 Unshort firing lead wire circuit and check for continuity.

5 Connect firing lead wire to blasting machine and fire charges.

6 After firing, remove lead wires from blasting machine and twist the end to short them.

(e) Electric blasting or demolition operations and unshielded electric blasting caps should be separated from radio frequency energy transmitters by the minimum distances specified in tables 15-1, 2, and 3. These distances apply to all parts of the operation, including the lead wires of the cap and the firing wires circuit. Before connecting electric blasting caps to the firing wires, the blasting circuit must be tested for the presence of extraneous electricity by the following test:

1 Arrange a dummy test circuit, essentially the same as the actual blasting circuit except that a No. 47 radio pilot lamp of known good quality inserted in place of the blasting cap shall be used without applying electric current to the circuit. Any glow is evidence of the presence of possible dangerous amounts of RF energy and blasting operations in such areas must be performed with non-electric blasting caps and safety fuse.

2 The Dupont Blaster's Multimeter, Model 101, may be substituted for the No. 47 radio pilot lamp. If the exposure is to radar, television, or other microwave transmitters, the actual blasting circuit, with blasting cap included, but without other explosives shall be used to test for extraneous electricity. Personnel performing such tests must be provided protection from the effects of an exploding blasting cap. Distances prescribed in tables 15-1, 2, and 3 should be used as a guide in the selection of sites for electric blasting operations in the vicinity of radar and other microwave transmitters.

Digitized by Google

000356

Table 15-1. Minimum Safe Distances Between RF Transmitters and Electric Blasting Operations

Transmitter power (watts)	Minimum safe distance meters (feet)			
	Commercial AM broadcast transmitters		HF transmitters other than AM broadcast	
100	228.6	(750)	228.6	(750)
500	228.6	(750)	518.2	(1,700)
1,000	228.6	(750)	731.5	(2,400)
4,000	228.6	(750)	1,463.0	(4,800)
5,000	259.1	(850)	1,676.4	(5,500)
10,000	396.2	(1,300)	2,316.5	(7,600)
25,000	609.6	(2,000)	3,657.6	(12,000)
50,000[1]	853.4	(2,800)	5,181.6	(17,000)
100,000	1,188.7	(3,900)	7,315.2	(24,000)
500,000[2]	2,682.2	(8,800)	16,764.0	(55,000)

[1]Present maximum power of US broadcast transmitters in Commercial AM Broadcast Frequency Range (0.535 to 1.605 MHz).

[2]Present maximum for international broadcast.

Table 15-2. Minimum Safe Distances Between Mobile RF Transmitters and Electric Blasting Operations

Transmitter Power Watts	Minimum Safe Distances Meters (Feet)									
	MF 1.6 to 3.4 MHz Industrial		HF 28 to 29.7 MHz Amateur		VHF 35 to 36 MHz Pub. Use 42 to 44 MHz Pub. Use 50 to 54 MHz Amateur		VHF 144 to 148 MHz Amateur 150.8 to 161.6 MHz Public Use		UHF 450 to 460 MHz Public Use	
5[1]										
10	12.2	(40)	30.5	(100)	12.2	(40)	4.6	(15)	3	(10)
50	27.4	(90)	67	(220)	27.4	(90)	10.7	(35)	6.1	(20)
100	38.1	(125)	94.5	(310)	39.6	(130)	15.2	(50)	9.1	(30)
180[2]							19.8	(65)	12.2	(40)
250	61	(200)	149.4	(490)	62.5	(205)	22.9	(75)	13.7	(45)
500[3]					88.4	(290)				
600[4]	91.4	(300)	231.6	(760)	96	(315)	35	(115)	21.3	(70)
1,000[5]	122	(400)	298.7	(980)	125	(410)	45.7	(150)	27.4	(90)
10,000[6]	381	(1,250)			396.2	(1,300)				

[1]Citizens band radio (walkie-talkie) (26.96 to 27.23 MHz) - Minimum safe distance - five feet.

[2]Maximum power for 2-way mobile units in VHF (150.8 to 161.6 MHz range) and for 2-way mobile and fixed station units in UHF (450 to 460 MHz range).

[3]Maximum power for major VHF 2-way mobile and fixed station units in 35 to 44 MHz range.

[4]Maximum power for 2-way fixed station units in VHF (150.8 to 161.6 MHz range).

[5]Maximum power for amateur radio mobile units.

[6]Maximum power for some base stations in 42 to 44 MHz band and 1.6 to 1.8 MHz band.

Digitized by Google

000357

Table 15-3. Minimum Safe Distances Between TV and FM Broadcasting Transmitters and Electric Blasting Operations

Effective radiative power (watts)	Minimum safe distances meters (feet)					
	Channels 2 to 6 and FM		Channels 7 to 13		UHF	
up to 1,000	304.8	(1,000)	228.6	(750)	182.9	(600)
10,000	548.6	(1,800)	396.2	(1,300)	182.9	(600)
100,000[1]	975.4	(3,200)	701	(2,300)	335.3	(1,100)
316,000[2]	1,310.6	(4,300)	914.4	(3,000)	442	(1,450)
1,000,000	1,767.8	(5,800)	1,219.2	(4,000)	610	(2,000)
5,000,000[2]	2,743.2	(9,000)	1,889.8	(6,200)	914.4	(3,000)
10,000,000	3,109	(10,200)	2,255.5	(7,400)	1,066.8	(3,500)
100,000,000					1,828.8	(6,000)

[1]Present maximum power, channels 2 to 6 and FM.

[2]Present maximum power, channels 7 to 13.

[3]Present maximum power, channels 14 to 83.

(f) Blasting or demolition operations shall not be conducted during an electrical storm or when a storm is approaching. All operations shall be suspended, cap wires and lead wires shall be short-circuited, and all personnel must be removed from the demolition area to a safe location when an electrical storm approaches.

(g) Prior to making connections to the blasting machine, the firing circuit shall be tested with a galvanometer for electrical continuity. The individual assigned to make the connections shall not complete the circuit at the blasting machine or at the panel, nor shall he/she give the signal for detonation until he/she is satisfied that all persons in the vicinity are in a safe place. When used, the blasting machine or its actuating device shall be in this individual's possession at all times. When the individual uses a panel, the switch must be locked in the open position until ready to fire and the single key or plug must be in his/her possession.

(h) Electric blasting caps must be in closed metal boxes when being transported by vehicles equipped with two-way radios and also when in areas where extraneous electricity is known to be present or is suspected of being present.

(3) Safety fuses may be used in the detonation of explosives where methods described in 15-3h(1) above cannot be accomplished. Safety fuse, when used, must be tested for burning rate at the beginning of each day's operation and whenever a new coil is used. Sufficient length of fuse shall be used to allow personnel to retire to a safe distance, but under no circumstances should a length be less than three feet or have less than 120 second burning time. Crimping of fuse to detonators must be accomplished with approved crimpers. Safety fuse which is too large in diameter to enter the blasting cap without forcing shall not be used. Before igniting the safety fuse, all personnel except the supervisor and not more than one assistant shall retire to the personnel shelter or be evacuated from the demolition area.

(4) When using blasting caps involving the electric or non-electric system of destruction, the explosives end of the blasting cap shall always be pointed away from the body.

i. *Detonation of Explosives.*

(1) Explosives to be destroyed by detonation should be detonated in a pit not less than four feet deep and covered with not less than two feet of earth. The components should be placed on their sides or in position to expose the largest area to the influence of the initiating explosives with an adequate number of demolition blocks placed in intimate contact on top of the item to be detonated and held in place by earth packed over the demolition blocks. Bulk explosives can be used as a substitute for demolition blocks. Where space permits and the demolition area is remotely located from inhabited buildings, boundaries, work areas, and storage areas, detonation of shells and explosives may be accomplished without the aid of a pit. In either event, however, the total quantity to be destroyed at one time, dependent on local conditions, should be established by trial methods to assure that adjacent and nearby structures and personnel are safe from the blast effect or missiles resulting from the explosion Rocket solid propellants should not be destroyed by detonation (paragraph 15-3p).

Digitized by Google

000358

(2) After each detonation, a search shall be made of the surrounding area for unexploded materials. Lumps of explosives may be picked up and prepared for the next detonation.

(3) In case of misfires, personnel shall not return to the point of detonation for at least 30 minutes after which not more than two qualified persons shall be permitted to examine misfire.

(4) AR 95-50 outlines the organization and functions of Regional Airspace Subcommittees and establishes uniform procedures for the handling of airspace problems. DARCOM installations will request, through channels, airspace clearance for demolition ground activities in accordance with these regulations.

j. *Dynamite.* Unopened boxes of exuding dynamite to be destroyed should be burned on a bed of combustible material without being opened. Precautions must be taken to protect personnel and property from possible detonation. Individual cartridges may be burned in a single layer not greater in width than the length of one cartridge, on a bed of combustible material. Dynamite awaiting destruction shall be shielded from the sun. Frozen dynamite is more likely to detonate during burning than normal cartridges. Destruction of dynamite by detonation may be accomplished where the location will permit this method of destruction. Care in priming to assure complete detonation of the quantity must be taken.

k. *Initiating Explosives.* When relatively large quantities of initiating explosives such as lead azide or mercury fulminate are to be destroyed, detonation is the best method. The bags containing the explosives should be kept wet while being transported to the demolition area. A predetermined number of bags should be removed from the containers, carried to the destruction pit, placed in intimate contact with each other and blasting caps used to initiate the explosives. The remaining explosives shall be kept behind a barricade with overhead protection during the destruction operations and located at a distance that will assure safety.

l. *RDX and PETN.* RDX and PETN may be burned as described in paragraph 15-3g. Since RDX and PETN are usually collected wet, they should be spread out and partially dried prior to burning. If the wet material will burn incompletely and with difficulty on the combustible bed, before any preparation for initiation is attempted fuel oil may be sprinkled over the bed of combustible material upon which the explosive is placed.

m. *Propelling Charges.* Propelling charges with igniters may be burned without slitting but in all cases igniter protector caps shall be removed from the charges to be burned. Protection must also be provided against possible projection of the charges and explosion. Propelling charges must not be piled one on the other but shall be burned in single layer of charges laid side by side. Core igniter type charges in the single layer should be separated by a distance equal to one caliber.

n. *Black Powder.*

(1) Black powder is best disposed of by dissolving out the potassium nitrate in a closed system and disposing of the solid wastes separately. It may also be burned as described below. Upon drying, wet black powder may retain some of its explosive properties since the nitrate may not have been removed completely.

(2) Only tools of wood or spark-resistant metal will be used in opening the containers. The contents of only one container will be burned at one time; no quantity should exceed 50 pounds. The powder must be removed from the container and spread on the ground in a train approximately two inches wide, so that no part of the train comes closer than 10 feet to another part. To ignite the powder bed, use a train of flammable material approximately 25 feet in length placed so that the train and the bed of powder burn into the direction from which the wind is blowing. Emptied black powder containers will be thoroughly washed with water. Serious explosions have occurred during handling of supposedly empty black powder cans. Safety precautions shall be observed.

o. *Pyrotechnic Materials.* Loose pyrotechnic materials should be burned under the same conditions as black powder. Water-wet pyrotechnic materials may be burned in small quantities in furnaces designed and approved for that purpose.

p. *Rocket Solid Propellants.*

(1) Wherever practicable, propellant must be removed from rocket motors and destroyed by burning. In the event removal of the propellant is not practicable, the rocket motor should be positioned or restricted to prevent movement and propellant in the units shall be destroyed by static firing. When units are to be destroyed by static firing, complete details of the procedures must be submitted to the Commander, DARCOM, ATTN: DRCSF for approval.

(2) Rocket or missile propellants (solid) may weigh as much as several thousand pounds per grain and the polymer-oxidizer type may be extremely difficult to ignite at atmospheric pressures. Large size rocket motors for specific systems may be destroyed in accordance with instructions contained in technical manuals or technical bulletins applicable to such systems.

Digitized by Google

000359

15-4. Destruction by Chemical Means. The chemical destruction of loose explosives, except as provided below, shall not be permitted unless approval is given by the Commander, DARCOM. Chemical methods must be supervised by qualified personnel having knowledge of chemistry. Chemical methods shall not be used in an attempt to destroy explosives which are enclosed or pressed into components such as detonators. The following procedures may be used under adequate supervision for 28 grams or less of the explosives named.

a. *Mercury Fulminate.* Place a quantity of aqueous sodium thiosulfate (hypo) solution (20 percent by weight of sodium thiosulfate) equal to 10 times the weight of mercury fulminate to be destroyed in a wood or earthenware container. While agitating the hypo solution, add water-wet mercury fulminate. The mixture shall be agitated by air or mechanical means but not by hand. Agitation must be continued until all fulminate has been dissolved, usually within two hours. Operators shall keep to the windward of the container or wear gas masks to avoid inhaling any cynogen gas evolved.

b. *Nitroglycerin.* Small quantities of nitroglycerin may be neutralized or destroyed with a mixture of the following solutions:

Solution A. Sodium sulfide (pulverized) (nine parts by weight) and water (30 parts by weight).

Solution B. Denatured ethyl alcohol (70 parts by weight) and acetone (20 parts by weight).

Do not combine the two solutions until immediately before use since potency of the mixed solutions diminishes on storage. This mixture should be used only for very small quantities of nitroglycerin (e.g., the oily film that adheres to surfaces after the nitroglycerin has been removed with sponges or absorbed in wood pulp or sawdust). Operators using this solution should wear rubber gloves.

c. *Black Powder.* Black powder may be completely destroyed by leaching or washing with large quantities of water and disposing of the washings separately from the residue.

d. *Lead Azide.*

(1) Lead azide accumulated on surfaces should be taken up with water wet cloths. The cloths should then be washed out in one of the solutions named below after which the complete desensitizing treatment is carried out in the solution. The cloths should be thoroughly washed with water before reuse. Empty shipping bags should be turned inside out and treated while still water-wet.

(2) The preferred chemical method for destroying lead azide is to use a 20 to 25 percent aqueous solution of ceric ammonium nitrate. When small quantities of lead azide are destroyed in this manner the reaction is not violent. Since one of the products of the reaction is a gas, the ending of the gas evolution indicates completion of destruction.

15-5. Decontamination.

a. *Decontamination Requirements.*

(1) The cleansing of equipment, buildings, and grounds of explosive materials is a difficult, tedious, and sometimes hazardous operation. Because of the wide variety of materials, the existence of cracks, crevices, and cavities, and the possibility of explosions and the evolution of toxic or explosive gases, the operations and techniques must be made as simple as possible and various precautions taken to ensure safety of personnel and completeness of decontamination. Serious accidents have occurred through the subsequent handling or heating of incompletely decontaminated equipment. DARCOM Safety Manual and DARCOM Regulations 385-series provide detailed safety measures.

(2) Loading plants, because of the use of a number of explosive materials, present particularly difficult problems of decontamination. The procedures appropriate to several different explosives manufacturing plants may be required for the decontamination of different parts of an individual loading plant.

(3) With the growing complexity of modern military explosives and propellants because of the introduction of new nonexplosive ingredients as well as mixtures of explosives, the problem of decontamination is increased correspondingly. New and special compositions, therefore, should be given careful technical consideration before decontamination operations are undertaken.

(4) A necessary function of decontamination is the collection of industrial wastes for destruction or reclamation. Elaborate controls are required to assure that these collection efforts are performed safely and economically without causing down-time in essential operations.

Digitized by Google

000360

b. *Decontamination and Dismantling Explosives Establishments.* The decontamination and dismantling procedures to be followed for explosives establishments upon cessation of activity or upon conversion to other uses shall be outlined in detail as prescribed in TB 700-4. Requirements shall be developed for cleaning and dismantling equipment preparatory to repair or maintenance. Any equipment used in an explosive operation which may subsequently be used in operations with non-explosive material or explosives other than that for which the equipment was used originally shall first be given whatever treatment is necessary to insure that no explosive material remains. Decontamination markings and the use of DA Form 3803, Materiel Inspection Tag, should be included as a part of these requirements.

c. *Decontamination Operations.*

(1) Wherever practicable, decontamination is affected by the physical operations of washing, steaming, and vacuuming. While washing operations suffice for most pyrotechnic materials, some smoke and incendiary compositions present explosion hazards when wet with water. A small amount of water contacting hexachloroethane (HC) smoke mixture may cause an explosion and release of toxic fumes. Metal objects such as nitrators, centrifuges, tanks, piping, etc. are washed with water and steamed. Wooden objects such as railings, paddles, etc. and buildings such as dry-houses, and packing materials, gaskets, etc., are destroyed by removing and burning after preliminary cleaning. Earth that is so contaminated as to offer a fire or explosion hazard is wetted, scraped up, and burned at a burning ground.

(2) Free acid present in equipment requires neutralization as well as washing and a five percent solution of sodium carbonate (soda ash) is used for this purpose. Because of the uncertainty of complete removal of explosives in all cases by the physical methods described, chemical methods are used also to supplement these. Standard decontamination procedures include the decontaminating chemical shown by table 15-4.

d. *Collection of Contaminated Industrial Wastes.* Industrial wastes which may contain explosive materials and chemical agents shall be collected only in holding, storage, or disposal facilities specifically designed and permitted (i.e., having environmental operating permits) for that purpose. Disposal into sanitary sewers, septic tanks, sanitary filter tanks, and unlined sumps, settling basins, or leaching pits is prohibited except as specifically authorized by permit. Sumps should be desensitized and cleaned at regular intervals. Cracks and crevices may contain explosives residue. Such residue must not be subjected to impact or friction from such sources as high pressure water streams, scraping tools or devices, etc., which may initiate the sensitive explosives. Quantities of initiating explosives in excess of 28 grams shall be destroyed by burning or detonation (see paragraph 15-3). Explosive materials to be removed from a settling basin should be maintained wet until removed. The more sensitive explosives should be maintained wet until destroyed. Materials containing powdered metals should be kept under water to prevent any dangerous rise in temperature which might otherwise be developed in the reaction between the metals and a small quantity of water.

Table 15-4. Decontaminating Chemicals

Contaminant	Decontaminating chemical
Lead azide	Ceric ammonium nitrate
Mercury fulminate	Sodium thiosulfate
Nitroglycerin	Methanolic sodium sulfite
Nitrocellulose	Sodium hydroxide
Smokeless powder	Sodium hydroxide and acetone
TNT	Sodium carbonate and sellite
Tetryl	Sodium carbonate and sellite or acetone
Pentolite	Acetone
White phosphorus	Copper sulphate solution

e. *Deposition from Waste Liquids.* When sumps or basins are properly designed, the wash water which passes beyond filters and basins should be free from significant amounts of explosive materials. If the effluent is discharged into a public stream, river, etc, it must not contain more explosives than permitted by local and state regulation. Consideration should be given to the possibility of deposition of explosive materials on the banks of streams or marshes during periods of drought, as well as to any possible subsequent precipitation of explosives with change of temperature, acidity, or concentration of the waste water. Where uncertainty exists regarding the composition of waste waters, competent technical advice and assistance should be obtained.

Digitized by Google

000361

f. *Handling Water-Soluble Materials.* Where ammonium picrate, black powder, or other materials which are appreciably soluble in water are handled, the amount of dissolved material should be kept as low as practicable. Floors should be swept before washing down to reduce the quantity of dissolved material in the wash water.

g. *Destruction of Collected Solid Wastes.* Contaminated solid waste material should be taken in closed containers, as soon as practicable, to buildings set apart for its treatment or to the burning ground to be destroyed in an appropriate manner. Collected explosive and chemical wastes must not be disposed of by being buried or thrown in any streams or tidewater unless they are decomposed by water. Disposal of decomposed wastes in streams or tidewater will be allowed only if permitted by federal, state, and local laws and regulations.

h. *Collection of Explosives Dusts.*

(1) Dust collecting systems may be used to aid cleaning, to lessen explosion hazards, and to minimize industrial job-incurred poisoning and dermatitis.

(2) Examples of high explosives dusts which may be removed by a vacuum system are TNT, tetryl, ammonium picrate, composition B, and pentolite. A wet collector, which moistens the dust close to the point of origin and keeps it wet until the dust is removed for disposal, is preferred except for ammonium picrate which should be collected in a dry system.

(3) More sensitive explosives such as black powder, lead azide, mercury fulminate, tracer, igniter, incendiary compositions, and pyrotechnic materials may be collected by vacuum in this manner, provided they are kept wet with the wetting agent, close to the point of intake. The vacuum (aspirator) systems must be so arranged that the various types of explosives are collected separately or in a manner to avoid mixture of dissimilar hazards; i.e., black powder with lead azide. Provision should be made for the proper liberation of gases that may be formed. The use of vacuum systems for collecting these more sensitive materials should be confined to operations involving small quantities of explosives; for example, in operations involving fuzes, detonators, small arms ammunition, and black powder igniters. Potential fire and explosion hazards can be minimized by collecting scrap pyrotechnic, tracer, flare, and similar mixtures in No. 10 mineral oil. Satisfactory techniques include placing the oil in catch pans and scrap transporting containers at the various operations throughout the plant, and by having individual oil containers serve as collection points for multiple operations. In the latter case, nominal quantities of dry scrap may accumulate at operating locations before they are delivered to collection points and placed in containers of oil. The level of oil should be kept at least 2.54 centimeters (one inch) above the level of any pyrotechnic mixture in the containers. Containers in which scrap explosives and pyrotechnic materials have been collected should be removed from the operating buildings for burning at least once per shift. Where oil is used, fire-fighting equipment satisfactory for Class B fires should be available. Carbon dioxide or foam extinguishers are recommended.

i. *Location of Collection Chambers.*

(1) Wherever practicable, dry type explosives dust collection chambers, except portable units as specifically provided for in paragraph 15-5j(3), should be located outside operating buildings in the open or in buildings exclusively set aside for the purpose. In order to protect operating personnel from an incident involving the collection chamber, a protective barrier must be provided between the operating building and the outside location or separate building where the collection chamber is placed. If the collection chamber contains 11.35 kilograms (25 pounds) of explosives or less, the protective barrier may be a 30.5 centimeters (12 inch) reinforced concrete wall located at least 2.44 meters (eight feet) away from the operating building. The collection chamber must be separated from cubicle walls by at least three feet. If the collection chamber contains more than 11.35 kilograms (25 pounds) of explosives and is separated from the operating building by a 30.5 centimeters (12 inch) reinforced concrete wall, the wall must be separated from the operating building by a minimum of unbarricaded intraline distance. The cubicle may be placed at a minimum of barricaded intraline distance from the operating building if the protective barrier meets the requirements of DARCOM safety regulations for operational shields (including the required three foot distance between the barrier and the explosives) and for the quantity of explosive in the collection chamber, or if the barrier complies with the requirements of paragraph 12-11v for barricades. Barricaded and unbarricaded intraline distances will be based on the quantity of explosives in the collection chamber.

Digitized by Google

(2) When it is not practicable to locate dry type collection chambers outside the operating building, a separate room within the building may be set aside for the purpose. This room shall not contain other operations nor shall it be used as a communicating corridor or passageway between other operating locations within the building when explosives are being collected. Walls separating the room from other portions of the operating buildings must meet the requirements specified in DARCOM safety regulations for the quantity of explosives in the collecting chamber. If more than one collection chamber is to be located in the room, the room must be subdivided into cubicles by walls meeting the requirements of DARCOM safety regulations and not more than one collection chamber shall be in a single cubicle.

(3) Stationary and portable wet type collectors may be placed in the explosives operating bays or cubicles provided the quantity of explosives in the collectors does not exceed five pounds. If placed in separate cubicles, the explosives limits for the collectors may be increased to the amount reflecting the capabilities of the cubicle walls as operational shields. For greater quantities, the location requirements set forth above are applicable.

j. *Design and Operation of Collection Systems.*

(1) Collection systems and chambers shall be designed to prevent pinching explosives (especially dust or thin layers) between metal parts. Pipes or tubes through which dusts are conveyed should have flanged, welded, or rubber connections. Threaded connections are prohibited. The system shall be designed to minimize accumulation of explosives dusts in parts other than the collection chamber. Accordingly, pipes or ducts through which high explosives are conveyed shall have long radius bends with a centerline radius at least four times the diameter of ducts or pipes. Short radius bends may be used in systems for propellant powder provided they are stainless steel with polished interiors. The number of points of application of vacuum should be kept to a minimum. So far as practicable, each room requiring vacuum collection chambers, but not more than two bays, shall be serviced by a common header to the primary collection chamber. Wet primary collectors are preferred. Not more than two primary collectors (wet or dry type) should be connected to a single secondary collector. If an operation does not create a dust concentration which may produce a severe health hazard, manual operation of the suction hose to remove explosives dusts is preferred to a permanent attachment to the explosive dust producing machine. A permanent attachment increases the likelihood of propagation through a collection system of a detonation occurring at the machine. Interconnection of manually operated hose connections to explosives dust-producing machines should be avoided.

(2) Two collection chambers should be installed in series ahead of the pump or exhauster to prevent explosives dust from entering the vacuum producer in dry vacuum collection systems.

(3) Dry type portable vacuum collectors shall not be located in a bay or cubicle where explosives are present or in inclosed ramps but may be positioned outside the building or in a separate cubicle having substantial dividing walls for quantities of explosives not exceeding five pounds. Wet type portable vacuum collectors may be placed in explosives operating bays or cubicles provided the quantity of explosives in the collector is limited in accordance with the requirements of paragraph 15-5i. For dry collection of quantities in excess of 2.3 kilograms (five pounds) or wet collection of quantities in excess of 6.8 kilograms (15 pounds), the further provisions of paragraph 15-5i shall apply.

(4) The design of wet collectors shall provide for proper immersion of explosives, breaking up air bubbles to release airborne particles, and removal of moisture from the air before it leaves the collector to prevent moistened particles of explosives from entering the small piping between the collector and the exhauster or pump.

(5) At least once every shift, explosives dust shall be removed from the collector chamber to eliminate unnecessary and hazardous concentrations of explosives. The entire system should be cleaned weekly, dismantling the parts if necessary.

(6) The entire explosives dust collecting system shall be electrically bonded and grounded. The grounds must be tested frequently.

(7) Slide valves for vacuum collection systems are permitted. There shall be no metal-to-metal contacts with the metal slide. An aluminum slide operating between two ebonite spacer bars will not constitute a hazard.

Digitized by Google

000363

15-6. Demilitarization.

a. *Pollution Abatement and Waste Recycling Requirements.* The problem of what to do with outdated ammunition to prevent both pollution and hazardous situations from occurring is an enormous one which dates back more than a century. At first glance, two answers become apparent, i.e., complete disposal or partial disposal with some recycling. The various chemical constituents of the warhead, propellant, or pyrotechnic are not only explosively hazardous but are frequently of a toxic character. Disposal by dumping into the world's oceans, incineration, or detonation have been shown to be not only dangerous but an addition to world pollution and as such, a persistant universal health hazard. Further, the problem of pollution from all sources (military and non military) became so acute in the United States in the early 1970's that both Presidential Executive Orders and Congressional legislation required that federal and private facilities be set up or converted to handle both pollution abatement and waste recycling. To this end, all US Military services (plus the AEC, now NRC) launched or vigorously continued their efforts to develop safe, efficient, and non-polluting methods of disposal or recycling of outdated ammunition, in particular, their energetic material content.

b. *Recovery and Reclamation of Energetic Materials.* Certain energetic materials such as relatively stable high explosives and pyrotechnics can be easily reclaimed and reloaded, but solid propellants which may have a limited storage life, require significant degrees of processing before they can be recycled or converted to other products. In many instances energetic material component recovery was not economically feasible. Energy conservation requirements strongly favor the recycling of energetic materials over pollution-free disposal (or the wasting) of these materials.

c. *Redesign of Ammunition for Use of Recycled Energetic Materials.* To have a safe, effective, and efficient program of ammunition recycling, ammunition that can be readily recycled must be available. To this end a new concept in ammunition design has been evolved. Ammunition items (inclusive of explosives, propellants, and/or pyrotechnics) will be designed and fabricated in such a manner as to be easily and safely recycled.

d. *Explosives Reclamation.* Preliminary removal of the high explosive charge from a mine, projectile, or shell usually involves the use of hot water or steam to liquefy the explosive which is then separated from the water by gravity, or contour drilling followed by high pressure water erosion to remove the high explosive residue. The new concept of ammunition which can be readily recycled by design, however has resulted in the prepackaging or encapsulation of the entire high explosive charge for easy and safe removal. After separation of the casing from the charge, table 15-5 summarizes the various procedures which have been developed to recover the individual constituents of the charge.

Table 15-5. High Explosive Reclamation

Constituent-composition	Explosive recovery technique
HBX from H-6 composition	A hot water erosion process removes the HBX from the warhead. Then the water explosive mixture flows into a vacuum kettle where the water is removed. The dried explosive is then dispensed through a multiported dispenser to an endless steel belt where it solidifies and is broken into flakes as it flows off the belt. Remelting and composition adjustment to form new HBX types or H-6 is then easily performed.
HMX from PBX 9404 composition	Preferential extraction of the binder is performed with concentrated (70 percent) technical grade nitric acid by adding the acid to the PBX component and heating the mixture to between 70°C and 95°C for several minutes. After cooling to room temperature, the excess acid is withdrawn. The extraction procedure is repeated until the HMX is free of the binder. The acid is then diluted with water and the HMX collected by vacuum filtration. Yield is 82.0 to 86.6 percent.

Digitized by Google

Table 15-5. High Explosive Reclamation (Cont)

Constituent-composition	Explosive recovery technique
HMX from PBX compositions developed after 1974	The binders which are incorporated in these post-1974 compositions are selected for their heat sensitivity. For example, polypropylene-glycol-urethane can be degraded when heated to 160°C for 10 hours. The HMX can then be extracted with methylene chloride.
RDX from RDX composition A and RDX and TNT RDX composition B	Selective batch extraction of the wax in composition A using benzene in a soxhlet apparatus leaves the RDX. The TNT in composition B is extracted either batchwise or continuously in from soxhlet apparatus with benzene subsequent to extraction of the wax with heptane. This procedure leaves the RDX intact.
RDX plus 0.03 percent desensitizer from composition A-3	The wax is removed (leaving the RDX) by selective solution using a batch process in which a benzene-water azeotrope is continuously circulated through an agitated composition A-3/benzene slurry.
RDX from composition B	Selective solution of TNT and desensitizer with benzene in a closed system.
RDX from composition C-3	Selective solution of all but the RDX content of the composition is accomplished by agitation of a slurry of composition C-3 and methanol (or acetone) in a kettle.
Tetryl from tetryl-metal stearate mixture	Tetryl is selectively dissolved by continuous acetone extraction followed by water precipitation to recover the tetryl.
Tetryl from tetryl-stearic acid mixture	Separation is accomplished by reaction of the mixture with a dilute solution of the sodium bicarbonate or carbonate at 90°C, cooling to room temperature, and then washing the tetryl with cold water. The tetryl is then recrystallized from acetone-water. Large pellets of the tetryl-stearic acid mixture require pre-treatment with an acetone soak.
TNT from amatol	The TNT is extracted with boiling water through a stainless steel mesh thus removing dirt and metal impurities. After the molten TNT settles, it is drawn off and rewashed with boiling water under agitation four times in a similar fashion. The TNT is then precipitated in cold water or run directly into graining kettles for immediate reuse.
TNT from 10/90 and 50/50 pentolite	TNT is selectively dissolved with benzene at 70°C followed by cooling, filtering, and evaporation of the benzene to obtain the TNT.
TNT and tetryl from tetrytol 75/25	TNT is selectively dissolved using a xylene-heptane (50/50) mixture. This procedure recovers 90 percent of the tetryl.
TNT from warheads	TNT is selectively dissolved using xylene.

Digitized by Google

e. *Propellants Reclamation.* Solid ammunition propellants are difficult to recycle because the smokeless base(s) (nitrocellulose and/or nitroguanidine) used in the ammunition will deteriorate with age. Solid rocket propellants in many instances can be recovered as shown in table 15-6. However, the polymeric binder used in solid rocket propellants is a cross-linked material which is insoluble in solvents making it impossible to remove the binder simply by solvent extraction. Furthermore, the finely divided metal and oxidizer particles are intimately coated with the binder which is also impervious to water making it impossible to remove a water-soluble oxidizer from the metal and binder. This impediment in recycling calls for chemical cleavage of the binder linkage or the use of binder molecular structures which can be thermally degraded. Liquid propellants, on the other hand, do not present much of a recycling problem. They usually consist of a fuel and an oxidizer which are both usually basic industrial chemicals that can be stored separately for an indefinite period of time. Hence, liquid propellants are always essentially recovered before actual use.

Table 15-6. Propellant Reclamation

Constituent-ammunition item or composition	Propellant constituent recovery technique
Ammonium perchlorate (or other oxidizer) and fuel from binder	The oxidizer is usually water-soluble. The oxidizer extraction process is efficiently performed with the cooling water used to cool the propellant grains during the shredding process. The oxidizer is then recrystallized and reused. The inert binder and metal fuel are further separated for the purpose of recovering the metal either before or after incineration.
Contaminants from .50 cal ammunition	The removal of contaminating igniter and tracer compositions from .50 cal propellant is performed by selective solution using a water spray from a fish-tail type of sprayer which emits the water at a 90 degree angle to the surface of the propellant powder as it is vibrated on a Day Roball Gyrator screen.
Nitrocellulose from deteriorated propellants	Recovery of nitrocellulose is performed by solution or dispersion under water, then careful molding to give a colloidal composition of nitrocellulose.
Nitrocellulose from single-base cannon powder containing DNT and dibutylphthalate (DBP)	Preferential solution of the DNT and DBP uses an extraction process with a mixture of benzene water.
Nitroglycerin propellants	A process of selective adsorption is used; i.e., a benzene solution of the various constituents of the composition are selectively adsorbed on materials such as Fullers earth, silicic acid, activated carbon, activated silicates, etc., followed by a desorption process.
Reclamation of cured polysulfide-perchlorate propellants	The waste cured propellant is reduced to a small particle size by passing it through a laboratory mill. It is then added to the extent of 20 percent of the total mixture to a normal mixture of propellant. The waste propellant re-liquefies to its precured state in the mixer by means of a molecular weight redistribution between the low molecular weight liquid polymer and the high molecular weight solid polymer. The reaction is complete in about 10 minutes.

f. *Pyrotechnics Reclamation.* As can be seen from the data in table 15-7, little work has been done on recycling the majority of pyrotechnic basic materials with the exception of the magnesium and sodium nitrate in illuminating flares and dyes in smoke components. Current investigations consist of attempts to recover the pyrotechnic materials from signal flares. However, the work to date can be considered as a pilot activity which can be further developed and applied to other pyrotechnic items and components.

Digitized by Google

Table 15-7. Pyrotechnic Reclamation

Constituent-composition	Pyrotechnic constituent recovery technique
Dyes from smoke compositions	Preferential solution with water leaves the dye plus other water insolubles for storage and later reuse in new units. The dyes can be further separated by extraction with a dilute aqueous mineral acid such as hydrochloric acid. If water is present in the dye, it can be extracted with alkaline solutions.
Magnesium from flare compositions	Water is used to selectively dissolve sodium nitrate and most of the binder material. The residual magnesium is then dried and sieved. In some instances the binder requires acetone or similar solvents.

Digitized by Google

000367

APPENDIX A
CHARACTERISTICS AND DATA

Table A-1. Sensitivity Test Values of Explosives

Material	Impact test with 2 kilogram weight		Pendulum friction test, percent explosions	Rifle bullet test, percent explosions	Explosion temperature test, °C	Minimum detonating charge, gram of-		Electrostatic sensitivity, joules
	PA APP (% TNT)	BM APP (% TNT)				lead azide	mercury fulminate	
Primary explosives								
Lead azide (pure)	29		100	-	-	-	-	0.01
DLA	29 to 43	13 to 28	-	-	340	-	-	-
SLA	14	30	-	-	350	-	-	-
CLA	14 to 21	-	-	-	-	-	-	-
PVA-LA	29 to 35	13 to 16	-	-	344	-	-	-
RD-1333	36	15	-	-	340	-	-	-
DCLA	21 to 42	-	-	-	345	-	-	-
Mercury fulminate	14	5	100	-	210	-	-	0.025
Diazodinitrophenol	14	5	100	-	195	-	-	0.25
Lead styphnate (normal)	21	8	-	-	282	-	-	0.0009
Tetracene	14	7		-	160	-	-	0.01
Aliphatic nitrate esters								
BTN	7	16	-	-	230	-	-	-
DEGN	-	-	-	-	237	-	-	-
Nitrocellulose								
Pyrocellulose (12.75% N)	21	8	-	100	170	-	-	-
Blended	21	8	-	100	200	-	-	-
Guncotton (13.3% N)	21	9	-	100	230	0.10	-	-
Nitroglycerin	7	16	100	100	222	-	-	-
Nitrostarch	36	-	-	-	217	-	-	-
PETN	43	17	5	100	215	0.03	0.17	0.036
TEGN	307	100+	0	-	225	-	-	-
TMETN	-	-	100	-	235	-	-	-
Nitramines								
HMX	-	32	100 (steel shoe) 0 (fiber shoe)	-	327	0.30	-	-
RDX	57	33	20	100	260	0.05	0.19	-
EDDN	64	75	-	-	445	-	2.0	
Haleite	-	48	0	-	190	0.21	0.13	
Nitroguanidine	-	47	0	0	275	0.20	-	-
Tetryl	57	26	0	70	257	0.10	0.19	-

Digitized by Google

000368

Table A-1. Sensitivity Test Values of Explosives (Cont)

Material	Impact test with 2 kilogram weight		Pendulum friction test, percent explosions	Rifle bullet test, percent explosions	Explosion temperature test, °C	Minimum detonating charge, gram of-		Electrostatic sensitivity, joules
	PA APP (% TNT)	BM APP (% TNT)				lead azide	mercury fulminate	
Nitroaromatics								
Ammonium picrate	121	100+	0	30	318	-	0.85	-
DATB	200	-	-	-	-	-	-	-
HNS	50	-	-	-	-	-	-	-
TATB	79	-	-	-	520	0.30	-	-
TNT	-	-	0	0	475	0.26	0.24	0.06
Ammonium nitrate	221	100+	0	0	no explosion	-	-	-
Binary								
Amatol	93 to 100	-	0	0	254 to 300	-	-	-
Composition A3	125	-	0	0	250 to 280	0.25	0.22	-
Composition B	100	75	-	20	278	0.20	0.22	-
Composition C3	100	100+	0	40	260	-	-	-
Composition C4	>100	-	0	20	263 to 290	0.20	-	-
55/45 Ednatol	-	95	0	0	190	0.22	0.22	-
75/25 Octol	170	-	0	-	350	0.30	-	-
70/30 Octol	136	-	0	-	335	0.30	-	-
50/50 Pentolite	86	34	0	80	220	0.13	0.19	-
Picratol	100	100+	0	0	285	-	-	-
70/30 Tetrytol	78	28	0	-	320	0.22	0.23	-
Tritonal	71	73	0	60	470	0.30	-	-
Ternary								
Amatex 20	107 to 129	-	-	6	240	-	-	-
HBX-1	75	-	-	75	-	-	-	-
HBX-2	80	-	-	80	-	-	-	-
HTA-3	121	-	0	90	370	-	-	-
Minol-2	93	35	-	-	224 to 280	-	-	-
Torpex	50	75	-	100	260	-	0.18	-
Quanternary								
DBX	71	-	-	49	200	0.20	-	-

Digitized by Google

Table A-2. Effects of Explosives

Material	Brisance measured by—		Fragmentation of shell percent TNT	Copper cylinder compression test	Rate of detonation		Ballistic pendulum test percent TNT	Trauzl lead block test percent TNT	Relative blast effect, percent TNT	
	Sand test (% TNT)	Plate dent test percent TNT			At density	Meters per second			Pressure	Impulse
Primary explosives										
Lead azide (pure)	40	-	-	-	4.68	5,400	-	40	-	-
DLA	38	-	-	-	-	-	-	-	-	-
Mercury fulminate	27.3 to 59	-	-	-	4.17	5,400	-	37 to 50	-	-
Diazodinitrophenol	94 to 105	-	-	-	1.63	7,100	-	110	-	-
Lead styphnate (normal)	22 to 53	-	-	-	2.9	5,200	-	42	-	-
Tetracene	40 to 70	-	-	-	-	-	-	51 to 63	-	-
Potassium dinitro-benzofuroxane	93	-	-	-	-	-	-	-	-	-
Aliphatic nitrate esters										
BTN	103	-	-	-	-	-	-	-	-	-
DEGN	100	-	-	-	1.38	6,760	127	144 to 150	-	-
Nitrocellulose										
Pyrocellulose (12.75% N)	94	-	-	-	-	-	-	-	-	-
Blended (13.3% N)	99	-	-	-	-	-	-	-	-	-
Guncotton	102	-	-	84	1.3	7,300	125	136 to 147	-	-
High nitrogen	108-120	-	-	-	-	-	-	-	-	-
Nitroglycerin	120	-	-	-	1.6	7,700	140	185	-	-
Nitrostarch(13.4% N)	-	-	-	83	0.90	6,190	145	-	-	-
PETN	129 to 141	127	-	-	1.773	8,300	145	170	-	-
TEGN	30.6	-	-	-	1.33	2,000	-	-	-	-
TMETN	91	-	-	-	-	-	-	140	-	-
Nitramines										
HMX	125	-	-	-	1.89	9,110	170	159 to 165	-	-
RDX	125 to 145	135 to 141	141	-	1.770	8,700	150	170	-	-
EDDN	96	100	-	-	1.50	6,915	120	125	-	-

Digitized by Google

000370

Table A-2. Effects of Explosives (Cont)

Material	Brisance measured by—		Fragmentation of shell percent TNT	Copper cylinder compression test	Rate of detonation		Ballistic pendulum test percent TNT	Trauzl lead block test percent TNT	Relative blast effect, percent TNT	
	Sand test (% TNT)	Plate dent test percent TNT			At density	Meters per second			Pressure	Impulse
Haleite	109 to 119	113 to 122	117 to 147	-	1.55	7,883	136	122 to 143	-	-
Nitroguanidine	73.5 to 84	95	-	-	1.70	8,100	104	78 to 101	-	-
Tetryl	113 to 123	115	121	117 to 125	1.71	7,850	145	125 to 145	-	-
Nitroaromatics										
Ammonium picrate	78 to 82.5	91	99	-	1.63	7,154	98	-	-	-
DATB	-	120	-	-	1.79	7,585	-	-	-	-
HNAB	-	-	-	-	1.77	7,250	-	123	-	-
HNS	-	120	-	-	1.70	7,000	-	-	-	-
TATB	90	-	-	-	1.937	8,000	-	-	-	-
TNT	-	-	-	-	1.636	6,826	-	-	-	-
Ammonium nitrate	-	-	-	-	1.0	2,800	-	75	-	-
Binary										
Amatol	74 to 94	-	81	-	1.6	5,300 to 6,550	122	116 to 126	97	87
Composition A3	107 to 115	126	150	-	1.6	8,200	132	144	-	-
Composition B	113	129 to 132	142	-	1.68	7,840	133	131	110	110
Composition C3	112	114 to 118	133	-	1.6	7,625	126	117	105	109
Composition C4	116	115 to 130	-	-	1.59	8,040	130	-	-	-
CH6	128	-	-	-	-	8,223	-	-	-	-
55/45 Ednatol	112	112	118	-	1.63	7,340	119	119	108	110
75/25 Octol	-	-	-	-	1.81	8,364 to 8,643	-	-	-	-
70/30 Octol	-	-	-	-	1.80	8,310 to 8,377	-	-	-	-
50/50 Pentolite	114	126	131	113	1.62	7,402	126	121	105	107
Picratol	94	100	102	-	1.67	6,970	100	-	100	100
70/30 Tetrytol	111	118	119	-	1.61	7,350	-	120	-	-
80/20 Tritonal	114	93	91	-	1.76	6,770	124	153	113	118

Digitized by Google

Table A-2. Effects of Explosives (Cont)

Material	Brisance measured by—		Fragmentation of shell percent TNT	Copper cylinder compression test	Rate of detonation		Ballistic pendulum test percent TNT	Trauzl lead block test percent TNT	Relative blast effect, percent TNT	
	Sand test (% TNT)	Plate dent test percent TNT			At density	Meters per second			Pressure	Impulse
Ternary										
Amatex 20	-	-	-	-	1.61	6,944	-	-	-	-
HBX-1	102	-	129	-	1.75	7,222	-	-	121	116
HBX-3	93.5	-	68	-	1.86	6,920	-	-	121	125
HTA-3	128	-	-	-	-	7,866	-	-	-	-
Minol-2	86	66	-	-	1.77	6,200	143	165	-	-
Torpex	122	120	126	-	1.8	7,660	134	161	122	125
Quanternary										
DBX	112	-	-	-	1.76	6,800	-	-	-	-

Digitized by Google

000372

Table A-3. Thermochemical Characteristics of Explosives

Material	Heat of combustion, calories per gram at constant pressure	Heat of formation, kilogram calories per mole	Products of explosion	
			Heat, calories per gram (H_2O gas)	Gas, milliliters per gram
Primary explosives				
Lead azide	-	−112 to −126.3	367	308
Mercury fulminate	938	−221 to −226	427	315
Diazodinitrophenol	-	956	820	-
Lead styphnate	1,251	92.3	460	440
Tetracene	-	270	658	1,190
Aliphatic nitrate esters				
BTN	2,167	368	1,458	-
DEGN	2,792	−99.4	1,161	-
Nitrocellulose				
Pyroxlyn (12% N)	-	−216	1,020	-
Guncotton (13.35% N)	2,313	−200	1,020	883.2
High nitrogen (14.14% N)	-	−191	1,810	-
Nitroglycerin	1,603	−90.8	1,486	715
PETN	1,957	−128.7	1,510	790
TEGN	3,428	−603.7	750	-
TMETN	2,642	−422	-	-
Nitramines				
HMX	2,231 to 2,253	11.3 to 17.93	1,460	-
RDX	2,259 to 2,264	14.71	1,460	908
EDDN	2,013	156.1	128 to 159	-
Haleite	2,477	20.11	1,276	908
Nitroguanidine	2,021	20.29	880	1,077
Tetryl	2,914	4.67 to 7.6	1,450	760
Nitroaromatics				
Ammonium picrate	2,745	95.82	800	-
DATB	-	−97.1 to −119	910	-
HNAB	-	−58 to −67.9	1,420	-
HNS	3,451	−13.9 to 1.87	1,360	-
TATB	2,850	−33.46 to −36.85	1,018	-
TNT	3,563 to 3,598	−10 to −19.99	1,290	730
Ammonium nitrate	-	88.6	381	980

Digitized by Google

000373

Table A-4. Stability Test Values of Explosives

Material	75°C international test, percent loss in weight	100°C heat test, percent loss in weight in-		Vacuum stability test						
					100°C		120°C		150°C	
		1st 48 hr	2d 48 hr	Sample, gm	ML	HR	ML	HR	ML	HR
Primary explosives										
Lead azide										
DLA	-	0.34	0.39	1	0.32	40	0.48	40	-	-
SLA	-	0.08	0.16	-	-	-	-	-	-	-
PVA-LA	-	0.13	-	1	0.20	40	0.44	40	-	-
RD1333	-	0.30	0.30	1	-	-	0.43	40	-	-
Mercury fulminate	0.18	explodes								
Diazodinitrophenol	0.24	2.10	2.20	5	7.6	40	-	-	-	-
Lead styphnate (normal)	-	1.5	1.5	1	0.4	40	0.4	40	-	-
Tetracene	0.5	23.2	3.4	-	-	-	-	-	-	-
Potassium dinitrobenzofuroxane	0.03	0.05	-	-	-	-	-	-	-	-
Lead mononitroresorcinate	-	-	-	2.3	-	-	0.4	40	-	-
Aliphatic nitrate esters										
Nitrocellulose (12% N)	-	0.3	0	1	-	-	5.0	48	-	-
Nitroglycerin	-	3.5	3.5	1	11+	16	-	-	-	-
PETN	0.02	0.1	0.0	5	0.5	40	11+	40	-	-
TEGN	-	1.8	1.6	1	0.45	40	0.8 to 0.99	8	-	-
TMETN	-	2.5	1.8	-	-	-	-	-	-	-
Nitramines										
HMX	-	0.05	0.03	5	0.37	40	0.45	40	0.62	40
RDX	0.03	0.04	0	5	-	-	0.9	40	2.5	40
Haleite	0.01	0.2	0.3	5	0.5	48	1.5 to 2.4	48	11+	-
Nitroguanidine	0.04	0.46	0.09	5	0.4	40	0.5	40	-	-
Tetryl	0.01	0.1	0.0	5	0.3	40	1.0	40	11+	12
Nitroaromatics										
Ammonium picrate	0.12	0.1	0.1	5	0.2	40	0.4	40	0.4	40
DATB	-	-	-	1	-	-	0.03	48	-	-
HNS	-	>1	-	-	-	-	-	-	-	-
TATB	-	.17	-	-	-	-	-	-	-	-
TNT	0.04	0.1	0.1	5	0.1	40	0.4	40	0.7	40
Ammonium nitrate	0.0	0.1	0.0	5	0.3	40	0.3	40	0.3	40

Digitized by Google

Table A-4. Stability Test Values of Explosives (Cont)

Material	75°C international test, percent loss in weight	100°C heat test, percent loss in weight in-		Vacuum stability test						
		1st 48 hr	2d 48 hr	Sample, gm	100°C		120°C		150°C	
					ML	HR	ML	HR	ML	HR
Binary										
50/50 Amatol	-	-	-	5	0.3	40	1.0	40	-	-
Composition B	-	0.2	0.2	5	0.7	48	0.9	48	11 +	48
Composition C3	-	-	-	-	1.21	48	11 +	48	-	-
Composition C4	-	0.13	0.0	-	0.20	40	-	-	-	-
55/45 Ednatol	-	0.2	0.1	5	0.7	40	11 +	24	-	-
75/25 Octol	-	-	-	5	-	-	0.39 to 0.65	40	11	40
70/30 Octol	-	-	-	5	-	-	0.37 to 0.76	40	5.10	40
50/50 Pentolite	-	0.0	0.2	5	2.5	40	11 +	16	-	-
Picratol	0.0	0.0	0.05	5	0.4	40	0.7	40	0.7	40
70/30 Tetrytol	-	0.1	0.1	5	3.0	40	11 +	40	-	-
80/20 Tritonal	-	-	-	5	0.1	40	0.2	40	0.8	40
Ternary										
HBX-1	-	0.058	0.0	-	-	-	-	-	-	-
HBX-2	-	0.70	0.0	-	-	-	-	-	-	-
Minol-2	-	-	-	5	0.0	48	2.1	40	-	-
Torpex	-	0.0	0.10	5	0.2	40	1.5	40	11 +	16

Table A-5. Density Values of Explosives in Grams Per Milliliter

Material	Crystal or liquid	Pressure in kilopascals (pounds per square inch)							Cast
		20,685 (3,000)	34,475 (5,000)	68,450 (10,000)	103,425 (15,000)	137,900 (20,000)	206,850 (30,000)	275,800 (40,000)	
Primary explosives									
Lead azide (pure)	4.87	-	-	-	-	-	-	-	-
DLA	-	-	-	-	3.14	-	-	-	-
SLA	-	-	-	-	3.31	-	-	-	-
PVA-LA	-	-	-	-	3.81	-	-	-	-
Mercury fulminate	4.43	3.0	3.2	3.6	3.82	4.0	4.1	-	-
Diazodinitrophenol	1.63 to 1.65	1.14	-	-	-	-	-	-	-
Lead styphnate (normal)	3.02	-	-	-	-	-	-	-	-
Tetracene	1.7	1.05	-	-	-	-	-	-	-
Aliphatic nitrate esters									
BTN	1.520	-	-	-	-	-	-	-	-
DEGN	1.39	-	-	-	-	-	-	-	-
Nitroglycerin	1.596	-	-	-	-	-	-	-	-

Digitized by Google

Table A-5. Density Values of Explosives in Grams Per Milliliter (Cont)

Material	Crystal or liquid	Pressure in kilopascals (pounds per square inch)							
		20,685 (3,000)	34,475 (5,000)	68,450 (10,000)	103,425 (15,000)	137,900 (20,000)	206,850 (30,000)	275,800 (40,000)	Cast
PETN	1.778	1.37	1.575	1.638	-	1.71	1.725	1.74	-
TEGN	1.335	-	-	-	-	-	-	-	-
TMETN	1.47	-	-	-	-	-	-	-	-
Nitramines									
HMX	1.905	-	-	-	-	-	-	-	-
RDX	1.816	1.46	1.52	1.60	1.65	1.68	1.70	1.71	-
Haleite	1.66 to 1.77	-	1.28	1.38	1.44	1.49	-	-	-
Nitroguanidine	1.71	0.95	-	-	-	-	-	-	-
Tetryl	1.73	1.40	1.47	1.57	1.63	1.67	1.71	1.71	1.62
Nitroaromatics									
Ammonium picrate	1.717	1.33	1.41	1.47	1.51	1.53	1.56	1.57	
HNAB	1.79	-	-	-	-	-	-	-	-
TNT	1.654	1.34	1.40	1.47	1.52	1.55	1.59	1.59	-
Ammonium nitrate	1.64 to 1.75	-	-	-	-	-	-	-	-
Binary									
Composition A3	-	1.47	-	-	-	-	-	-	-
Composition B	-	-	-	-	-	-	-	-	1.68
55/45 Ednatol	-	-	-	-	-	-	-	-	1.62
75/25 Octol	1.832 to 1.843	-	-	-	-	-	-	-	1.800
70/30 Octol	1.819 to 1.822	-	-	-	-	-	-	-	1.790
50/50 Pentolite	-	-	-	-	-	-	-	-	1.63 to 1.67
Picratol	-	-	-	-	-	-	-	-	1.62
70/30 Tetrytol	-	-	-	-	-	-	-	-	1.60
80/20 Tritonal	-	-	-	-	-	-	-	-	1.73
Ternary									
HBX-1	-	-	-	-	-	-	-	-	1.76
HBX-3	-	-	-	-	-	-	-	-	1.882
Minol-2	-	-	-	-	-	-	-	-	1.62 to 1.74
Torpex	-	-	-	-	-	-	-	-	1.82
Quanternary									
DBX	-	-	-	-	-	-	-	-	1.61 to 1.74

Digitized by Google

Table A-6. Conversion Factors and Constants

Unit	Factor	Product
Inches	25.4	Millimeters
Millimeters	0.03937	Inches
Microns	0.001	Millimeters
Angstrom units	0.0000001	Millimeters
Square inches	645.16	Square millimeters
Square millimeters	0.00155	Square inches
Cubic inches	16.387	Milliliters
Milliliters	0.061025	Cubic inches
Cubic feet	0.028317	Cubic meters
Cubic feet	7.48	U.S. gallons
Cubic meters	35.315	Cubic feet
Liters	61.022	Cubic inches
Liters	0.264178	U.S. gallons
U.S. gallons	231.	Cubic inches
U.S. gallons	3.78533	Liters
U.S. gallons	8.337	Pounds water at 15°C
Kilograms	2.2046	Pounds
Pounds	453.59	Grams
Ounce	28.35	Grams
Calories	4.1855	International joules
Calories	0.0413	Liter-atmospheres
Kilogram-calories	3.9685	BTU's
BTU's	0.25198	Kilogram-calories
BTU per cubic foot	890.	Kilogram calories per cubic meter
Kilograms per square centimeter	14.223	Pounds per square inch
Atmospheres	1033.3	Grams per square centimeter
Atmospheres	14.696	Pounds per square inch
Atmospheres	760.	Millimeters of mercury
Pounds per square inch	6.895	Kilopascals
Gram moles	22.414	Liters at 0°C and 760 mm of mercury
R (gas constant)	1.9684	Calories per °C per mole
Foot candles	1.	Lumens per square foot
Lumens	0.001496	Watts

Digitized by Google

Table A-7. Specifications[1]

Material	Specification Number
Primary explosives	
Lead azide	MIL-L-3055
Special purpose lead azide	MIL-L-14758
RD1333 (lead azide)	MIL-L-46225
Mercury fulminate	JAN-M-219
Diazodinitrophenol	JAN-D-552
Lead styphnate, basic	MIL-L-16355
Lead styphnate, normal	MIL-L-757
Tetracene	MIL-T-46938
Potassium dinitrobenzofuroxane	MIL-P-50486
Lead mononitroresorcinate	MIL-L-46496
Aliphatic nitrate esters	
Butanetriol trinitrate	no specification
Diethyleneglycol dinitrate	no specification
Nitrocellulose	MIL-N-244
Nitroglycerin	MIL-N-246
Nitrostarch	no specification
PETN	MIL-P-387
TEGN	no specification
TMETN	no specification
Nitramines	
HMX	MIL-H-45444
RDX	MIL-R-398
EDDN	no specification
Haleite	no specification
NQ	MIL-N-494
Tetryl	MIL-T-339
Nitroaromatics	
Ammonium picrate	MIL-A-166
DATB	no specification
HNAB	no specification
HNS	no specification
TATB	no specification
TNT	MIL-T-248
Ammonium nitrate	MIL-A-50460
Binary	
Amatol	no specification
Composition A3	MIL-C-440
Composition A4	MIL-C-440
Composition A5	MIL-E-14970
Composition A6	MIL-C-60051
Composition B	MIL-C-401
Composition B3	MIL-C-45113
Composition B4	MIL-C-46652
Cyclotol	MIL-C-13477
Composition CH6	MIL-C-21723

Digitized by Google

000378

Table A-7. Specifications[1] (Cont)

Material	Specification Number
Ednatol	no specification
Octol	MIL-O-45445
Pentolite (50/50)	JAN-P-408
Picratols	no specification
Tetrytols	no specification
Tritonal	no specification
Ternary	
Amatex	no specification
Ammonal	no specification
H6	MIL-E-22267
HBX	MIL-E-22267
HTA-3	no specification
Minol-2	MIL-M-14745
Torpex	no specification
PBX	
Military specifications	
LX-14-0	MIL-H-46358
PBX Type 1	MIL-P-14999
PBX Type 2	
PBX 0280	MIL-R-48878
PBX 9010	MIL-P-45447
PBX 9407	MIL-R-63419
PBXN-203	MIL-E-85113
PBXN-4	MIL-P-23625
PBXN-5	MIL-E-81111
Navy specifications (ternary catagory)	
PBXN-3	OS-11641
PBXN-6	WS-12604
PBXN-101	WS-3829
PBXN-102	WS-3823
PBXN-103	OS-12800D
PBXN-104	WS-11511
PBXN-201	WS-11498
PBXN-301	WS-12612
Dept of energy specifications (Lawrence Livermore Laboratory [LLNL])	
LX-04	RM 252353
LX-07	RM 253379
LX-09	RM 253200
LX-10	RM 253511
LX-13	RM 253520

[1]Currently, because of worker exposure hazards, benzene is being replaced by other solvents in all specifications.

Digitized by Google

Table A-8. Hazardous Component Safety Data Sheet (HCSDS) Numbers

Material	Sheet Number
Amatex	00920
Amatol	00774
Ammonium nitrate	00252
Ammonium picrate	00905
Black powder	00020
Colored smoke (green, yellow, red, violet)	20016
Composition A3	00150
Composition A4	00311
Composition A5	00546
Composition A7	00910
Composition B	00101, 01276, 01277
Composition B4	00151
Composition B5	00413
Composition C4	00077
Composition CH6	00628
Composition H6	00829
Composition HTA-3	00630
DATB	01194
Diazodinitrophenol	40066
Dinitrotoluene	00439
Lead azide (CLA and PVA-LA)	00066
Lead azide RD1333	00128
LX14	01043
Military dynamite	00147
Nitrocellulose	00031
Nitroglycerin	00030
Nitroguanidine	00491
Nitrostarch	40067
Octol	00154
PBXN4	01195
PBXN5	00622
PBXN6	00994
50/50 Pentolite	00253
PETN	00087
Propellant M1	00447
Propellant M2	00807
Propellant M5	00317
Propellant M6	00371
Propellant M7	00221
Propellant M8	00238
Propellant M9	00035
Propellant M10	00601
Propellant M15	00822
Propellant M17	00823
Propellant M30	00318
Pyroxlyn	00860
Tetryl	00116
TMETN	01193
80/20 Tritonal	00479

Digitized by Google

000380

APPENDIX B
BIBLIOGRAPHY

Army Material Command Pamphlet (AMCP) 706-180: (Engineering Design Handbook) Principles of Explosive Behavior. Washington, DC: Headquarters, US Army Material Command, 1972.

Army Material Command Pamphlet (AMCP) 706-185: (Engineering Design Handbook) Military Pyrotechnics: Part One, Theory and Application. Washington DC: Headquarters, US Army Material Command, 1967.

Army Material Command Pamphlet (AMCP) 706-186: (Engineering Design Handbook) Military Pyrotechnics: Part Two, Safety, Procedures, and Glossary. Washington, DC: Headquarters, US Army Material Command, 1963.

Army Material Command Pamphlet (AMCP) 706-188: (Engineering Design Handbook) Military Pyrotechnics: Part Four, Design of Ammunition of Pyrotechnic Effect. Washington, DC: Headquarters, US Army Material Command, 1974.

Brophy, Leo T., Wyndham D. Miles, and Rexmon Cochrane. *The Chemical Warfare Service, From Laboratory to Field.* US Army in World War II. Washington, DC: Office of Chief of Military History, Department of the Army, 1959.

Canby, Courtlandt. *A History of Weaponry.* New York: Hawthorne Books, Inc, 1963.

Davis, T.L. *Chemistry of Powder and Explosives.* New York, 1943.

DARCOM Regulation 385-100. Alexandria, Virginia: US Army Material Development and Readiness Command, 1981.

Dobratz, B.M. *LLNL Explosives Handbook: Properties of Chemical Explosives and Explosive Stimulants.* Springfield, Virginia: National Technical Information Service (US Department of Commerce), 1981.

Faber, Henry B. *The History and Development of Military Pyrotechnics.* Military Pyrotechnics, vol I. Washington, DC: Government Printing Office, 1919.

Fair, H. and R. Walker, ed. *Energetic Materials.* Technology of the Inorganic Azides, vol 2. New York: Plenum Press, 1977.

Green, Constance M., Harry C. Thompson, and Peter C. Roots. *The Ordnance Department, Planning Munitions for War.* US Army in World War II. Washington, DC: Office of Chief of Military History, Department of the Army, 1955.

Hermes, Walter G. *US Army in the Korean War, Truce Tent and Fighting Front.* Washington, DC: Office of the Chief of Military History, Department of the Army, 1966.

Joint Service Safety and Performance Manual for Qualification of Explosives for Military Use. Army Research and Development Command (ARRADCOM), 1972.

LASL Explosive Property Data. T. Gibbs and A. Popolato, editors, Berkeley: University of California Press, 1980.

Linder, V. *Explosives and Propellants.* Encyclopedia of Chemical Technology, Third Edition, vol 9. New York: John Wiley and Sons, 1980.

McLain, J.H. *Pyrotechnics.* Philadelphia: Franklin Institute Press, 1980.

Meyer, R. *Explosives.* Verlag Chemie, Weinheim, New York, 1977.

Military Chemistry and Chemical Compounds, FM 3-9/AFR 3557, 30 October, 1975.

Mitchell, William A. *World's Military History.* Harrisburg, PA: Military Service Publishing Co., 1935 (1921).

Digitized by Google

000381

Partington, J.R. *A History of Greek Fire and Gunpowder. Cambridge, England: W. Heffer and Sons, LTD, 1960.*

Pollard, F.B. and J.H. Arnold, ed. Aerospace Ordnance Handbook. Englewood Cliffs, New Jersey: Prentiss Hall, 1966.

Prentiss, Agustin M. *Chemicals in War.* York, Pa: McGraw-Hill, Maple Press, 1937.

Pristera, F. *Explosives.* Encyclopedia of Industrial Chemical Analysis, vol 12. New York: John Wiley and Sons, 1971.

Stiefel, Ludwig. *Gun Propellants.* Progress in Astronautics and Aeronautics, vol 66, 1978.

The Encyclopedia of Explosives and Related Items. Springfield, Virginia: National Technical Information Service (US Department of Commerce), 1960-1982.

Thompson, Harry C. and Lida Mayo. *The Ordnance Department, Procurement and Supply.* US Army in World War II. Washington, DC: Office of Chief of Military History, Department of the Army, 1956.

Wells, H.G. *The Outline of History.* New York: The Macmillan Co., 1923 (1920).

Yinon, J. and S. Zitrin. *The Analysis of Explosives.* Peragamon Series in Analytical Chemistry, vol 3. New York: Peragamon Press, 1981.

Digitized by Google

INDEX

	Paragraph	Page
Adiabatic sensitivity test	5-19	5-9
Afocite	11-4	11-5
Air transportation of explosives and ammunition	14-5	14-14
Akardits	9-12	9-11
Akatsuki	11-5	11-9
Akvanity	11-6	11-10
Akvatoly	11-6	11-11
Aldofit	11-9	11-16
Aliphatic nitrate esters	8-2	8-1
Aluminized explosives (see ammonal)		
Alyumatoly	11-6	11-11
Alyumit No. 1	11-6	11-11
Alyumotol	11-6	11-11
Amatex 20		
Brisance	8-6	8-124
Characteristics	8-6	8-124
Destruction	15-3	15-1
Packing	14-2	14-1
Sensitivity	8-6	8-124
Shipment	14-5	14-10
Stability	8-6	8-124
Amatol		
Brisance	8-6	8-98
Characteristics	8-6	8-97
Destruction	15-3	15-1
Manufacture	8-6	8-98
Packing	14-2	14-1
Reactivity	8-6	8-98
Sensitivity	8-6	8-98
Shipment	14-5	14-10
Stability	8-6	8-98
Toxicity	12-14	12-47
Amatolo	11-4	11-5
Amatolos	11-7	11-13
Amatol, Russian	11-6	11-11
Ammoksily	11-6	11-11
Ammonaftite	11-4	11-5
Ammonal, Italian	11-4	11-5
Ammonal		
Brisance	8-6	8-124
Characteristics	8-6	8-124
Destruction	15-3	15-1
Manufacture	8-6	8-124
Packing	14-2	14-1
Reactivity	8-6	8-125
Sensitivity	8-6	8-125
Shipment	14-5	14-10
Stability	8-6	8-125
Ammonaly	11-6	11-11
Ammonaru	11-5	11-9
Ammongelatin dynamit	11-8	11-15

Digitized by Google

000383

	Paragraph	Page
Ammoniakkrut	11-8	11-15
Ammonit	11-6	11-11
Ammonit predokhranitel'nyi	11-6	11-11
Ammonit V-3V poroshke	11-6	11-11
Ammonite No. 1	11-4	11-5
Ammonity	11-6	11-11
Ammonium nitrate		
Brisance	8-5	8-95
Characteristics	8-5	8-92
Destruction	15-3	15-1
History	2-5	2-4
Manufacture	8-5	8-94
Packing	14-2	14-1
Reactivity	8-5	8-93
Sensitivity	8-5	8-95
Shipment	14-5	14-10
Specification	8-5	8-94
Stability	8-5	8-95
Ammonium nitrate fuel oil explosives	8-6	8-135
Water gel explosives	8-6	8-135
Slurry explosives	8-6	8-135
Incendiaries	2-7, 2-7	2-1, 2-10
Ammonium picrate		
Brisance	8-4	8-59
Characteristics	8-4	8-55
Destruction	15-3	15-1
History	2-7	2-5
Manufacture	8-4	8-57
Packing	14-2	14-1
Reactivity	8-4	8-57
Sensitivity	8-4	8-58
Shipment	14-5	14-10
Specification	8-4	8-58
Stability	8-4	8-59
Toxicity	12-14	12-47
Ammonpentrinit	11-9	11-16
Ammontol	11-6	11-12
Amolit	11-9	11-17
Amonales	11-7	11-13
Amonitas	11-7	11-13
Amylace	11-2	11-2
Anagon	11-7	11-13
ANFO (see ammonium nitrate fuel oil explosives)		
Antigrison	11-4	11-5
Antigrisouteux	11-2	11-4
Antigrisu explosives	11-7	11-13
AT	11-6	11-10
Autonile	11-4	11-5
A-IX-2	11-6	11-10
Ball propellant manufacturing	9-5	9-4
Ballistic mortar test	3-5	3-4
Ballistic pendulum test	3-5	3-4
Baratol	11-7	11-13
Becker-Kistiakowsky-Wilson equation of state	4-5	4-10

Digitized by Google

000384

	Paragraph	Page
Belity	11-6	11-12
Binding agents, pyrotechnic	10-1	10-2
Black powder	2-3	2-2
Black powder, destruction of	15-3	15-7
BLAKE code	9-3	9-3
Blast effects	4-6	4-11
Blastin	11-8	11-15
BM	11-4	11-5
Bonit	11-8	11-15
Bonocord	11-8	11-15
Booster	3-4	3-1
Brisance, definition	3-5	3-4
BTN (see butanetriol trinitrate)		
Burning rate	3-2, 9-7	3-1, 9-6
Burning, theory of	3-2	3-1
Bursting charge	3-4	3-2
Buryi shokoladnyi porakh	11-6	11-12
Butanetriol trinitrate		
Brisance	8-2	8-1
Characteristics	8-2	8-1
Destruction	15-3	15-1
History	2-6	2-7
Manufacture	8-2	8-1
Packing	14-2	14-1
Reactivity	8-2	8-1
Sensitivity	8-2	8-1
Shipment	14-5	14-10
Stability	8-2	8-1
Cap test	6-10	6-2
Card gap test	6-9	6-2
Centralite	9-12	9-11
Chapman-Jouquet theory	4-5	4-9
Charnyi porokh	11-6	11-12
Chauyaku	11-5	11-9
Chemical destruction of energetic material	15-4	15-8
Chetah codes	9-3	9-3
Chromatography	13-3	13-4
CLA (see lead azide)		
Classical chemical analysis	10-3	10-36
Closed bomb apparatus	2-5	2-4
Closed bomb test, propellants	6-7	6-1
Collection of explosive dust	15-5	15-10
Collection of waste	15-5	15-9
Collodion (see nitrocellulose)		
Color intensifiers	10-1	10-1
Colored smoke	3-4, 10-1	3-3, 10-6
Compatibility, propellants	6-2	6-1
Composite propellant		
Definition	3-4	3-3
Manufacturing	9-5	9-4

Digitized by Google

000385

	Paragraph	Page
Composition A		
Brisance	8-6	8-100
Characteristics	8-6	8-100
Destruction	15-3	15-1
Manufacture	8-6	8-100
Packing	14-2	14-1
Sensitivity	8-6	8-100
Shipment	14-5	14-10
Stability	8-6	8-101
Composition B		
Brisance	8-6	8-106
Characteristics	8-6	8-105
Destruction	15-3	15-1
Manufacture	8-6	8-105
Packing	14-2	14-1
Reactivity	8-6	8-105
Sensitivity	8-6	8-105
Shipment	14-5	14-10
Stability	8-6	8-106
Composition C		
Brisance	8-6	8-111
Characteristics	8-6	8-109
Destruction	15-3	15-1
History	15-3	15-3
Manufacture	8-6	8-111
Packing	14-2	14-1
Reactivity	8-6	8-111
Sensitivity	8-6	8-109, 8-111
Shipment	14-5	14-10
Specification	8-6	8-109, 8-110
Stability	8-6	8-110, 8-111
Composition CH6		
Brisance	8-6	8-111
Characteristics	8-6	8-111
Destruction	15-3	15-1
Packing	14-2	14-1
Sensitivity	8-6	8-111
Shipment	14-5	14-10
Computer programs		
Detonation	4-5	4-10
Interior ballistics	9-10	9-8
Propellants	9-3	9-2
Cook-off temperature test	5-6	5-5
Corning of black powder	2-5	2-3
Couche	11-2	11-3
Covolume	9-3	9-2
CSE	11-2	11-3
Cyclotetramethylenetetranitramine		
Brisance	8-3	8-30
Characteristics	8-3	8-27
Destruction	15-3	15-1

Digitized by Google

	Paragraph	Page
Cyclotetramethylenetetranitramine (Cont)		
Manufacture	8-3	8-29
Packing	14-2	14-1
Reactivity	8-3	8-30
Sensitivity	8-3	8-30
Shipment	14-5	14-10
Specification	8-3	8-29
Stability	8-3	8-30
Toxicity	12-14	12-45
Cyclotrimethylenetrinitramine		
Brisance	8-3	8-35
Characteristics	8-3	8-30
Destruction	15-3	15-1
History	2-6, 2-8	2-8, 2-14
Manufacture	8-3	8-34
Packing	14-2	14-1
Reactivity	8-3	8-33
Sensitivity	8-3	8-34
Shipment	14-5	14-10
Specification	8-3	8-37
Stability	8-3	8-35
Toxicity	12-14	12-45
Cylinder expansion test	5-21	5-9
Dainamaito	11-5	11-10
DATB (see diamino-trinitrobenzene)		
DBX (see depth bomb explosive)		
DCLA (see lead azide)		
DDNP (see diazodinitrophenol)		
Decontamination	15-5	15-28
Deflagration	3-2, 4-3	3-1, 4-1
Deflagration to detonation transition propellant	6-4	6-1
Deflagration to detonation transfer	4-4	4-2
DEGN (see diethyleneglycol dinitrate)		
Delays	3-4, 10-1	3-3, 10-15
Demilitarization	15-6	15-12
Depth bomb explosive		
Brisance	8-6	8-129
Characteristics	8-6	8-129
Destruction	15-3	15-1
Manufacture	8-6	8-129
Packing	14-2	14-1
Sensitivity	8-6	8-129
Shipment	14-5	14-10
Stability	8-6	8-129
Toxicity	12-14	12-47
deSaint Roberts equation	9-7	9-6
Destruction by burning and detonation	15-3	15-1
Destruction of waste	15-5	15-8
Detection, hidden explosives	13-7	13-11
Detection, residues	13-6	13-10
Deterrent	9-7	9-7
Detonation	3-2, 4-5	3-1, 4-3
Detonation velocity		
Definition	3-5	3-4
Test	5-5	5-3
Detonierande zundschnur	11-9	11-17
Detonity	11-6	11-12

Digitized by Google

	Paragraph	Page
Development tests, pyrotechnic	10-3	10-24
Diamino-trinitrobenzene		
Brisance	8-4	8-62
Characteristics	8-4	8-61
Destruction	15-3	15-1
Manufacture	8-4	8-61
Packing	14-2	14-1
Sensitivity	8-4	8-62
Shipment	14-5	14-10
Stability	8-4	8-62
Diamon	11-4	11-6
Diamon 1B	11-4	11-6
Diazodinitrophenol		
Brisance	7-4	7-10
Characteristics	7-4	7-9
Destruction	15-3	15-1
History	2-8	2-12
Manufacture	7-4	7-9
Packing	14-2	14-1
Reactivity	7-4	7-9
Sensitivity	7-4	7-10
Shipment	14-5	14-10
Specification	7-4	7-10
Stability	7-4	7-11
Diethyleneglycol dinitrate		
Brisance	8-2	8-2
Characteristics	8-2	8-1
Destruction	15-3	15-1
History	2-8	2-13
Manufacture	8-2	8-1
Packing	14-2	14-1
Reactivity	8-2	8-2
Sensitivity	8-2	8-2
Shipment	14-5	14-10
Stability	8-2	8-2
Differential thermal analysis	3-5, 10-3	3-5, 10-35
Digressive grain	9-6	9-5
Dinaftalit	11-6	11-12
Dinamitas	11-7	11-14
Dinamity	11-6	11-12
Dinamones	11-7	11-14
Dinitronaftalin	11-6	11-12
Diphenylamine	2-7, 9-12	2-9, 9-28
Disposal	15-2	15-1
DLA (see lead azide)		
Donarita	11-7	11-14
Double-base propellant	3-4, 9-2, 9-5	3-2, 9-5, 9-4
DPA (see diphenylamine)		
Dynamic burning	9-7	9-7
Dynamite	2-6, 8-6	2-6, 8-304
Dynamite, destruction of	15-3	15-7
Dynamite, Italian	11-4	11-5

Digitized by Google

	Paragraph	Page
EDDN (see ethylenediamine dinitrate)		
Ednatols		
Brisance	8-6	8-112
Characteristics	8-6	8-112
Destruction	15-3	15-1
Manufacture	8-6	8-112
Packing	14-2	14-1
Sensitivity	8-6	8-112
Shipment	14-5	14-10
Stability	8-6	8-112
Electrical primers	7-9	7-19
Electron spin resonance	13-5	13-9
Electrostatic discharge sensitivity test, propellants	6-11	6-2
Electrostatic sensitivity	3-5	3-4
Electrostatic sensitivity, explosives	5-4	5-3
Equation of the form	9-10	9-8
Explosion temperature test	6-17	6-3
Erosive burning	9-7	9-7
Esplosivi da mina	11-4	11-6
Esplosivi di primari	11-4	11-8
Esplosivi di rinfargo	11-4	11-8
Esplosivi di scoppio	11-4	11-8
Esplosivi plastico	11-4	11-8
Esplosivi S20	11-4	11-8
ESR (see electron spin resonance)		
Ethyl centralite	9-12	9-11
Ethylenediamine dinitrate		
Brisance	8-3	8-38
Characteristics	8-3	8-38
Destruction	15-3	15-1
Manufacture	8-3	8-38
Packing	14-2	14-1
Reactivity	8-3	8-38
Sensitivity	8-3	8-38
Shipment	14-5	14-10
Stability	8-3	8-38
Ethylenedinitramine		
Brisance	8-3	8-41
Characteristics	8-3	8-39
Destruction	15-3	15-1
History	2-8	2-13
Manufacture	8-3	8-39
Packing	14-2	14-1
Reactivity	8-3	8-39
Sensitivity	8-3	8-40
Shipment	14-5	14-10
Specification	8-3	8-40
Stability	8-3	8-41
Evaluation tests, pyrotechnic	10-3	10-25
Explosif amylace	11-2	11-1
Explosif D	11-2	11-4
Explosifs antigrisouteux	11-2	11-1
Explosifs chlorates	11-2	11-2
Explosifs couche	11-2	11-3

Digitized by Google

000389

	Paragraph	Page
Explosifs CSE	11-2	11-3
Explosifs et poudres	11-2	11-4
Explosifs roche	11-2	11-4
Explosive D (see ammonium picrate)		
Explosive train	3-4	3-1
Explosives cloratado	11-7	11-14
Explosives, general requirements	5-1	5-1
Explosivo plastico "La Maranosa"	11-7	11-14
External heat test, propellants	6-3	6-1
Fireworks	2-3	2-2
Flares	2-7, 3-4, 10-1	2-11, 3-6, 10-3
Flying plate test	5-9	5-7
Forty foot drop test	5-14	5-8
Fragmentation test	5-20	5-9
French energetic material	11-2	11-1
Friction sensitivity	5-7	5-5
Friction sensitivity test, propellants	6-12	6-2
Fuels, pyrotechnic	10-1	10-1
Fulminating gold	2-5	2-3
Fumers	3-4, 10-1	3-3, 10-11
Fuses	3-4, 10-1	3-3, 10-15
Gap tests	5-8	5-7
Gas chromatography	13-3	13-5
Gas operated pyrotechnic devices	10-3	10-12
Gelatine - cheddit	11-9	11-17
Gelatine - penthrinits	11-9	11-17
Gelatinerad dynamit	11-8	11-15
German energetic material	11-3	11-4
GLC (see gas chromatography)		
Grammonal	11-6	11-12
Granulity	11-6	11-12
Grisou dinamite	11-4	11-8
Grisounite	11-4	11-8
Grisounite gomma	11-4	11-8
Grisounite roccia	11-4	11-8
Growth and exudation test	5-15	5-8
GSC (see gas chromatography)		
Guncotton (see nitrocellulose)		
Gunpowder	2-4	2-2
Haleite (see ethylenedinitramine)		
Hazard classification	12-12	12-29
HBX-1 (see high blast explosives)		
HBX-2 (see high blast explosives)		
Heat of combustion	3-5	3-3
Heat of detonation	3-5	3-3
Heat of fusion	3-5	3-3
Heat of sublimation	3-5	3-3
Heat of vaporization	3-5	3-3
Heat tests, 100° and 75°C	3-5	3-5
Heat tests, propellants, 134.5° and 120°C	6-5	6-1
Hexal	11-9	11-17
Hexaliti	11-4	11-8

Digitized by Google

000390

	Paragraph	Page
Hexanitroazobenzene		
Brisance	8-4	8-62
Characteristics	8-4	8-62
Destruction	15-3	15-1
Manufacture	8-4	8-62
Packing	14-2	14-1
Sensitivity	8-4	8-62
Shipment	14-5	14-10
Stability	8-4	8-62
Hexanitrostilbene		
Brisance	8-4	8-65
Characteristics	8-4	8-62
Destruction	15-3	15-1
Manufacture	8-4	8-65
Packing	14-2	14-1
Sensitivity	8-4	8-65
Shipment	14-5	14-10
Stability	8-4	8-66
Hexgeno plastico	11-7	11-14
Hexocire	11-4	11-8
Hexocire-aluminum	11-4	11-8
Hexonitas	11-7	11-14
Hexonite	11-9	11-17
Hexotol	11-8	11-15
Hexotonal	11-8	11-15
High blast explosives		
Brisance	8-6	8-125
Characteristics	8-6	8-125
Destruction	15-3	15-1
Manufacture	8-6	8-126
Packing	14-2	14-1
Sensitivity	8-6	8-125
Shipment	14-5	14-10
Stability	8-6	8-125
High loading rate compression test	6-14	6-2
High performance liquid chromatography	13-3	13-6
HMX (see cyclotetramethylenetetranitramine)		
HNAB (see hexanitroazobenzene)		
HNS (see hexanitrostilbene)		
Hot spots	4-2	4-1
Housekeeping of storage areas	12-4	12-2
HPLC (see high performance liquid chromatography)		
HTA-3		
Brisance	8-6	8-126
Characteristics	8-6	8-126
Destruction	15-3	15-1
Manufacture	8-6	8-126
Packing	14-2	14-1
Sensitivity	8-6	8-126
Shipment	14-5	14-10
Stability	8-6	8-126
Hugoniot equation	4-5	4-6
H-6 (see high blast explosives)		

Digitized by Google

000391

	Paragraph	Page
IBIS	9-10	9-10
Identification, residues	13-6	13-10
Igdanit	11-6	11-13
Ignitability	9-8	9-7
Ignitability test, propellants	6-17	6-3
Igniters	3-4, 10-1	3-2, 10-17
Ignition	4-2	4-1
Ignition train	3-4	3-2
Illuminance, pyrotechnic	10-1	10-2
Illustrations		
3-1. Explosive train		3-2
3-2. Ignition train		3-2
4-1. Shock wave formation		4-4
4-2. Steady plane shock front		4-5
4-3. Control volume o: ·· ss passing through a shock front		4-5
4-4. Shock properties in the x-t plane		4-8
4-5. Shock properties in the P-u plane		4-8
4-6. Shock properties in the P-V_s plane		4-9
4-7. Detonation wave		4-9
4-8. P-V_s plot during detonation		4-10
4-9. Typical pressure-time record for the blast from a bomb		4-12
4-10. Mach reflection of blast wave		4-14
4-11. Shaped charge and target		4-15
4-12. Shaped charge jet formation		4-16
4-13. Shaped charge penetration		4-16
5-1. Vacuum stability test		5-2
5-2. Anvil striker arrangement, ERL machine		5-3
5-3. Drop weight impact machine, ERL type, type 12 tools		5-3
5-4. Picatinny Arsenal impact test apparatus		5-4
5-5. Parts of Picatinny Arsenal test apparatus		5-5
5-6. Bureau of Mines impact test apparatus		5-6
5-7. Scaled drawing of the SUSAN projectile		5-9
6-1. 90°C Dutch weight loss test results		6-3
7-1. Structural formula for lead azide		7-1
7-2. DTA curve for lead azide		7-6
7-3. Structural formula for DDNP		7-9
7-4. Preparation of DDNP		7-10
7-5. Basic lead styphnate		7-12
7-6. Normal lead styphnate		7-12
7-7. DTA curve for lead styphnate		7-14
7-8. TGA curve for lead styphnate		7-15
7-9. Structural formula for tetracene		7-15
7-10. Structural formula for KDNBF		7-17
7-11. Structural formula for LMNR		7-17
8-1. Structural formula for BTN		8-1
8-2. Structural formula for DEGN		8-1
8-3. Cellulose		8-3
8-4. Nitration of cellulose		8-5
8-5. DTA curve for nitrocellulose		8-8
8-6. Structural formula for nitroglycerin		8-9
8-7. Schmid-Meissner continuous method for manufacturing nitroglycerin		8-11

Digitized by Google

		Paragraph	Page
Illustrations (Cont)			
8-8.	Biazzi continuous method for manufacturing nitroglycerin		8-13
8-9.	Structural formula of PETN		8-16
8-10.	Thermal decomposition of PETN		8-23
8-11.	DTA curve for PETN		8-24
8-12.	TGA curve for PETN		8-25
8-13.	Structural formula for TEGN		8-25
8-14.	Structural formula for TMETN		8-26
8-15.	Structural formula for HMX		8-27
8-16.	DTA curve for HMX		8-31
8-17.	TGA curve for HMX		8-32
8-18.	Structural formula for RDX		8-32
8-19.	DTA curve for RDX		8-36
8-20.	TGA curve for RDX		8-37
8-21.	Structural formula for EDDN		8-38
8-22.	Structural formula for Haleite		8-39
8-23.	Production of ethyleneurea		8-40
8-24.	Boiling of dinitroethyleneurea		8-41
8-25.	Production of Haleite		8-41
8-26.	Structural formula for nitroguanidine		8-43
8-27.	DTA curve for nitroguanidine		8-46
8-28.	TGA curve for nitroguanidine		8-47
8-29.	Structural formula for tetryl		8-47
8-30.	Trinitrophenyl methylamine		8-48
8-31.	Hydrolysis of tetryl		8-48
8-32.	Reaction of tetryl with aniline		8-49
8-33.	Homologs and analogs of tetryl		8-49
8-34.	Nitration and hydrolysis of methylaniline		8-50
8-35.	Benzidine derivatives during tetryl manufacture		8-51
8-36.	Deflagration to detonation transfer apparatus		8-53
8-37.	Effects of compaction on predetonation column length in tetryl		8-54
8-38.	Kinetic gas-evolution curves in the decomposition of tetryl		8-54
8-39.	DTA curve for tetryl		8-56
8-40.	TGA curve for tetryl		8-57
8-41.	Structural formula for ammonium picrate		8-57
8-42.	DTA curve for ammonium picrate		8-60
8-43.	Structural formula for DATB		8-61
8-44.	DTA curve for DATB		8-63
8-45.	Structural formula for HNAB		8-64
8-46.	DTA curve for HNAB		8-64
8-47.	Structural formula for HNS		8-65
8-48.	DTA curve for HNS		8-68
8-49.	TGA curve for HNS		8-69
8-50.	Structural formula for TATB		8-69
8-51.	Configuration of TATB molecule		8-69
8-52.	SUSAN test results for TATB		8-72
8-53.	DTA curve for TATB		8-73
8-54.	Structural formula for TNT		8-75
8-55.	White compound		8-78
8-56.	TNT and 2,4,5-TNT reaction		8-78
8-57.	Reaction of TNT with nitrosylchloride		8-79
8-58.	Reaction between TNT and phthalic anhydride		8-79
8-59.	Reduction of TNT with sodium borohydride		8-79

Digitized by Google

000393

		Paragraph	Page
Illustrations (Cont)			
8-60.	Seven member ring structure		8-80
8-61.	Reaction of TNT with hydrogen		8-80
8-62.	Production of TATB from TNT		8-80
8-63.	Reaction of TNT with bases		8-61
8-64.	Reaction of TNT with potassium hydroxide		8-81
8-65.	Reaction of TNT with phenylhydrazine		8-82
8-66.	Agitation versus MNT yield		8-84
8-67.	SUSAN test results for TNT		8-88
8-68.	DTA curve for TNT		8-90
8-69.	TGA curve for TNT		8-91
8-70.	4,6-Dinitroanthronil		8-91
8-71.	Explosive coke azoxy compound		8-91
8-72.	Photoexcitation of TNT		8-92
8-73.	Structural formula for ammonium nitrate		8-93
8-74.	DTA curve for ammonium nitrate		8-96
8-75.	TGA curve for ammonium nitrate		8-97
8-76.	DTA curve for 80/20 amatol		8-99
8-77.	DTA curve for composition A		8-101
8-78.	DTA curve for composition A3		8-102
8-79.	SUSAN test results for composition B3		8-106
8-80.	SUSAN test results for 75/25 cyclotol		8-106
8-81.	DTA curve for composition B		8-107
8-82.	DTA curve for 75/25 cyclotol		8-108
8-83.	TGA curve for composition B		8-109
8-84.	DTA curve for composition C3		8-110
8-85.	SUSAN test results for LX-14		8-113
8-66.	DTA curve for LX-14		8-113
8-87.	SUSAN test results for 75/25 octol		8-117
8-88.	DTA curve for 75/25 octol		8-118
8-89.	DTA curve for pentolite		8-120
8-90.	DTA curve for H6		8-127
8-91.	Injection molding process		8-131
8-92.	DTA curve for PBXN-5		8-132
9-1.	Typical shapes of propellant grains		9-5
9-2.	Web thickness and direction of burning through a progressively burning grain		9-6
9-3.	Pressure travel curves for a projectile in a gun		9-9
9-4.	Akardits		9-12
12-1.	Storage compatibility mixing chart		12-22
12-2.	Deleted		
12-3.	Deleted		
13-1.	Gas chromatograph output		13-6
14-1.	Steel box for packing solid propellants, including marking		14-1
14-2.	Metal lined wood box for packing solid propellants, including markings		14-2
14-3.	Metal containers for propelling charges, including marking		14-3
14-4.	Palletized large caliber high explosive projectiles, including marking		14-3
14-5.	Palletized wood boxes containing explosives		14-4
14-6.	Carton for packing high explosives, including marking		14-4
14-7.	Wood box for packing high explosives, including marking		14-5

Digitized by Google

000394

	Paragraph	Page
Impact sensitivity	3-5	3-4
Impact sensitivity test:		
Explosives	5-3	5-2
Propellants	6-13	6-2
Impetus	9-10	9-10
Impulse, blast	4-6	4-12
Incendiaries	3-4, 10-1	3-3, 10-4
Infrared spectroscopy	13-5	13-8
Infrared spectroscopy, pyrotechnics	10-4	10-12
Initiating explosives, destruction of	15-3	15-7
Initiation	4-2	4-1
Initiator	3-4, 10-1	3-2, 10-6
Interior ballistics	9-10	9-8
Italian dynamites	11-4	11-5
Italian energetic material	11-4	11-4
Japanese energetic materials	11-5	11-9
Jolt test	5-12	5-7
Jumble test	5-13	5-7
Jump equations	4-5	4-6
KDNBF (see potassium dinitrobenzofuroxane)		
KI (potassium iodide) test	3-5	3-5
Kokushokuyaku	11-5	11-9
LANL large scale gap test	5-8	5-7
LANL small scale gap test	5-8	5-7
Lead azide		
Brisance	7-2	7-5
Characteristics	7-2	7-1
Destruction	15-4	15-8
History	2-7	2-9
Manufacture	7-2	7-3
Packing	14-2	14-1
Sensitivity	7-2	7-4
Shipment	14-5	14-10
Specification	7-2	7-4
Stability	7-2	7-5
Toxicity	12-14	12-45
Types	7-2	7-3
Lead mononitroresorcinate		
Characteristics	7-8	7-17
Destruction	15-3	15-1
Manufacture	7-8	7-18
Packing	14-2	14-1
Shipment	14-5	14-10
Specification	7-8	7-18
Lead styphnate		
Brisance	7-5	7-13
Characteristics	7-5	7-11
Destruction	15-3	15-1
History	2-7	2-9
Manufacture	7-5	7-12
Packing	14-2	14-1
Reactivity	7-5	7-1
Sensitivity	7-5	7-13
Shipment	14-5	14-10
Specification	7-5	7-12, 7-13
Stability	7-5	7-13
Types	7-5	7-1

Digitized by Google

	Paragraph	Page
Liquid chromatography	13-3	13-4
LLNL reactivity test	3-5	3-5
LMNR (see lead mononitroresorcinate)		
Low loading rate compression test	6-15	6-2
LX-14		
Characteristics	8-6	8-112
Destruction	15-3	15-1
Packing	14-2	14-1
Sensitivity	8-6	8-112
Shipment	14-5	14-10
Mach reflection	4-6	4-13
Magazine operational regulations	14-4	14-7
Magazine temperature control	14-4	14-7
Magazines	12-11, 14-4	12-16, 14-6
Magnetic resonance	13-5	13-9
Malfunction tests, pyrotechnic	10-3	10-9
Mansit	11-6	11-13
Manufacturing, pyrotechnics	10-2	10-8
Marking	14-3	14-6
Mass spectrometry	13-5	13-10
MAT	11-4	11-8
Matter explosives	11-9	11-17
Mercury fulminate		
Brisance	7-3	7-8
Characteristics	7-3	7-5
Destruction	15-4	15-8
History	2-6	2-4
Manufacture	7-3	7-7
Packing	14-2	14-1
Reactivity	7-3	7-7
Sensitivity	7-3	7-8
Shipment	14-5	14-10
Specification	7-3	7-8
Stability	7-3	7-8
Toxicity	12-14	12-45
Methyl centralite	9-12	9-11
Minol 2		
Brisance	8-6	8-125
Characteristics	8-6	8-126
Destruction	15-3	15-1
History	2-7	2-14
Manufacture	8-6	8-128
Packing	14-2	14-1
Sensitivity	8-6	8-128
Shipment	14-5	14-10
Stability	8-6	8-128
Miporit	11-6	11-13
Miscela C	11-4	11-8
Motor vehicle transportation of explosives and ammunition	14-5	14-12
MS (see mass spectrometry)		
Multiple fragment impact test, propellant	6-23	6-4
Muzzle flash	9-9	9-8

Digitized by Google

000396

	Paragraph	Page
NATO tests, pyrotechnic	10-3	10-26
NA-OC	11-4	11-8
Neutral grain	9-6	9-5
90°C Dutch weight loss test	6-19	6-3
Nitrocellulose		
Brisance	8-2	8-7
Characteristics	8-2	8-2
Destruction	15-3	15-1
History	2-6	2-5
Manufacture	8-2	8-4
Packing	14-2	14-1
Reactivity	8-2	8-7
Sensitivity	8-2	8-7
Shipment	14-5	14-10
Specification	8-2	8-9
Stability	8-2	8-6
Toxicity	12-14	12-48
Types	8-2	8-3
Nitrogelatinedynamit	11-9	11-17
Nitroglicol	11-4	11-8
Nitroglycerin		
Brisance	8-2	8-14
Characteristics	8-2	8-9
Destruction	15-4	15-8
History	2-6	2-5
Manufacture	8-2	8-10
Reactivity	8-2	8-9
Sensitivity	8-2	8-13
Shipment	14-5	14-10
Specification	8-2	8-13
Stability	8-2	8-14
Nitroguanidine		
Brisance	8-3	8-45
Characteristics	8-3	8-42
Destruction	15-3	15-1
History	2-6	2-7
Manufacture	8-3	8-44
Packing	14-2	14-1
Reactivity	8-3	8-45
Sensitivity	8-3	8-44
Shipment	14-5	14-10
Specification	8-3	8-43
Stability	8-3	8-45
Nitrostarch		
Brisance	8-2	8-15
Characteristics	8-2	8-15
Destruction	15-3	15-1
History	2-6	2-5
Manufacture	8-2	8-15
Packing	14-2	14-1
Reactivity	8-2	8-15
Sensitivity	8-2	8-15
Shipment	14-5	14-10
Stability	8-2	8-15
Nizol	11-9	11-17

Digitized by Google

000397

	Paragraph	Page
NMR (see nuclear magnetic resonance)		
Nobelit	11-8	11-16
Nobelite galleria	11-4	11-8
Nougat	11-4	11-8
NQ (see nitroguanidine)		
NS (see nitrostarch)		
NSWC small scale gap test	5-8	5-7
NTP	11-4	11-8
Nuclear magnetic resonance	13-5	13-9
Octols		
Brisance	8-6	8-114
Characteristics	8-6	8-114
Destruction	15-3	15-1
History	2-9	2-22
Packing	14-2	14-1
Sensitivity	8-6	8-114
Shipment	14-5	14-10
Stability	8-6	8-114
Open storage	14-4	14-7
Oxidizing agents, pyrotechnic	10-1	10-1
Oxiliquite	11-4	11-9
Oxilite	11-4	11-9
Oxygen balance	3-5	3-4
Packing containers for black powder	14-2	14-5
Packing containers for explosives, propellants, and ammunition containing explosives	14-2	14-5
Packing for explosives and propellants	14-2	14-5
Paper chromatography	13-3	13-4
Particle velocity	4-5	4-3
PBX (see plastic bonded explosives)		
Peak pressure, blast	4-6	4-12
Pentaerythritol tetranitrate		
Brisance	8-2	8-20
Characteristics	8-2	8-16
Destruction	15-3	15-1
History	2-7	2-16
Manufacture	8-2	8-17
Packing	14-2	14-1
Reactivity	8-2	8-19
Sensitivity	8-2	8-19
Shipment	4-5	14-10
Specification	8-2	8-18
Stability	8-2	8-22
Toxicity	12-14	12-45
Pentolite		
Brisance	8-6	8-119
Characteristics	8-6	8-117
Destruction	15-3	15-1
Manufacture	8-6	8-117
Packing	14-2	14-1
Sensitivity	8-6	8-117
Shipment	14-5	14-10
Specification	8-6	8-117
Stability	8-6	8-119
Toxicity	12-14	12-47

Digitized by Google

000398

	Paragraph	Page
Pentoriru	11-5	11-10
Pentostit	11-9	11-17
Pentritolo	11-4	11-9
Pentro	11-9	11-17
Percussion primers	7-9	7-18
PETN (see pentaerythritol tetranitrate)		
Photoflash compositions	3-4, 10-1	3-3, 10-6
Picratol		
Brisance	8-6	8-121
Characteristics	8-6	8-121
Destruction	15-3	15-1
Manufacture	8-8	8-121
Packing	14-2	14-1
Sensitivity	8-6	8-121
Shipment	14-5	14-10
Stability	8-6	8-121
Toxicity	12-14	12-47
Plastic bonded explosives	8-6	8-129
Plastolit	11-9	11-17
PNP esplosivo	11-4	11-9
Pobedit VP-4	11-6	11-13
Polarography	13-4	13-7
Pollution abatement	15-6	15-12
Polvere al nitrodiglical	11-4	11-9
Polvere al nitrometriolo	11-4	11-9
Polvere FB	11-4	11-9
Polvere FC	11-4	11-9
Polvere NAC	11-4	11-9
Polvere nera	11-4	11-9
Polveri da lancio senza fumo	11-4	11-9
Polvoras negras	11-7	11-14
Potassium dinitrobenzofuroxane (KDNBF)		
Brisance	7-7	7-16
Characteristics	7-7	7-16
Destruction	15-3	15-1
History	2-6	2-8
Packing	14-2	14-1
Sensitivity	7-7	7-16
Shipment	14-5	14-10
Specification	7-7	7-17
Stability	7-7	7-16
Poudres	11-2	11-4
Power, definition	3-5	3-4
Primary compositions	7-9	7-18
Primary explosive, definition	3-4	3-1
Progressive grain	9-6	9-5
Propellant charge design	9-9	9-7
Propellant compositions	9-2	9-1
Propellant grain geometry	9-6	9-5
Propellant grains	9-4	9-3
Propellant manufacturing	9-5	9-3
Propellant, use	3-4	3-2
Propelling charges, destruction of	15-3	15-7
PVA-LA (see lead azide)		

Digitized by Google

000399

	Paragraph	Page
PX gap test	5-8	5-7
Pyrocellulose (see nitrocellulose)		
Pyrolysis	3-5	3-5
Pyrotechnic compositions, classification	3-4	3-3
Pyrotechnic devices	10-1	10-1
Pyrotechnic materials, destruction of	15-3	15-7
Pyroxylin (see nitrocellulose)		
Quantity-distance relationships	12-11	12-8
Qxiliquita y aire liquido	11-7	11-14
Railroad shipment of explosives and ammunition	14-5	14-10
RD1333 (see lead azide)		
RDX (see cyclotrimethylenetrinitramine)		
Reclamation of energetic materials	15-6	15-14
Reclamation of propellants	15-6	15-14
Reclamation of pyrotechnics	15-6	15-14
Recovery	12-7	12-4
Relative force	9-7	9-6
Relative quickness	9-7	9-6
Reolit	11-8	11-16
Retardants, pyrotechnic	10-1	10-1
Rifie bullet impact test	5-16	5-8
Roche	11-2	11-4
Runup distance	4-4	4-2
Russian energetic materials	11-6	11-10
Safety hand tools	12-5	12-3
Secondary explosive, definition	3-4	3-1
Selectite No. 1	11-6	11-13
Sensitivity		
Definition	3-5	3-3
Propellant	9-11	9-10
Pyrotechnic compositions	10-5	10-13
Seramin	11-8	11-16
Service tests, pyrotechnic	10-3	10-9
Shaped charge effect	2-6, 4-7	2-7, 4-14
Shaped charge jet impact test, propellant	6-20	6-4
Shaped charge jet spall test, propellant	6-21	6-4
Shipment of explosives and ammunition	14-5	14-10
Shoanyaku	11-5	11-10
Shock sensitivity	3-5	3-4
Shock waves	4-5	4-3
Shotoyaku	11-5	11-10
Signals	3-4, 10-1	3-3, 10-2
Single-base propellant	3-4, 9-2, 9-5	3-2, 9-2, 9-3
Single fragment impact test, propellant	6-22	6-4
Skid tests	5-18	5-9
SLA (see lead azide)		
Slurry explosives, Russian	11-6	11-13
Smoke	2-2, 2-7	2-1, 2-10
Smoke dyes	10-1	10-1
Spanish energetic materials	11-7	11-13
Spectrometry	13-5	13-7
Spectroscopy	13-5	13-7
Sprangdeg	11-8	11-16

Digitized by Google

000400

	Paragraph	Page
Spranggelatin	11-8	11-16
Stab detonators	7-9	7-19
Stability, definition	3-5	3-4
Stability, propellant	9-12	9-10
Stacking ammunition	14-4	14-7
Storage	12-3	12-2
Storage compatibility groupings	12-13	12-37
Storage of bulk initiating explosive	14-4	14-9
Storage of explosives and ammunition containing explosives	14-4	14-6
Storage of propellants	14-4	14-9
Strand burner test	6-18	6-3
Surveillance test	6-8	6-2
Surveillance tests, pyrotechnic	10-3	10-9
SUSAN test	5-17	5-8
Svartkrut	11-8	11-16
Swedish energetic materials	11-8	11-14
Swiss energetic materials	11-9	11-16
T_4 plastico	11-4	11-9
Tables		
4-1. Unreacted hugoniot data		4-6
4-2. Reaction zone length		4-10
4-3. Detonation pressures		4-11
7-1. Various types of lead azide		7-1
7-2. Sensitivity of dry and wet lead azide		7-4
7-3. Loading density of mercury fulminate		7-5
7-4. Deterioration of mercury fulminate		7-9
7-5. Solubility of diazodinitrophenol		7-9
7-6. Efficiency of initiating compounds		7-11
7-7. High temperature percussion primers		7-18
7-8. Percussion priming compositions		7-18
7-9. Stab detonator priming compositions		7-19
7-10. Electric priming compositions		7-20
8-1. Compositions of mixed acids for nitrating cellulose		8-5
8-2. Decomposition of nitrocellulose		8-7
8-3. Impact sensitivity of nitroglycerin - acetone mixtures		8-14
8-4. Packing density		8-16
8-5. Solubility of PETN in acetone water mixtures		8-17
8-6. PETN eutactics		8-17
8-8. Gap test results for PETN		8-20
8-9. Detonation velocity versus density		8-20
8-10. PETN detonation pressures versus density		8-21
8-11. Solubility of HMX		8-27
8-12. Solubility of HMX by volume		8-28
8-13. Specific heat of HMX		8-28
8-14. Gap test results for HMX		8-29
8-15. Specific heat of RDX		8-30
8-16. RDX packing density		8-30
8-17. RDX-TNT solubility		8-32
8-18. Solubility of RDX in various solvents		8-33
8-19. Gap test results for RDX		8-35
8-20. Types of RDX		8-37
8-21. Granulation requirements for RDX		8-37

Digitized by Google

000401

		Paragraph	Page
Tables (Cont)			
8-22.	Haleite packing density		8-39
8-23.	Solubility of nitroguanidine in sulfuric acid		8-42
8-24.	Gap test results for nitroguanidine		8-45
8-25.	Density as a function of loading pressure for tetryl		8-45
8-26.	Dielectric constant of tetryl		8-47
8-27.	Solubility of tetryl in various solvents		8-48
8-28.	Heat initiation of tetryl		8-51
8-29.	Heat initiation of confined tetryl		8-51
8-30.	Gap test results for tetryl		8-52
8-31.	Low velocity detonation in tetryl		8-53
8-32.	Composition of gaseous products of tetryl decomposition		8-54
8-33.	Composition of condensed phase tetryl		8-55
8-34.	Density of ammonium picrate		8-55
8-35.	Solubility of ammonium picrate		8-57
8-36.	Ammonium picrate explosion temperature		8-58
8-37.	Gap test results for DATB		8-60
8-38.	Gap test results for HNAB		8-61
8-39.	Properties of HNS		8-65
8-40.	Gap test results for HNS		8-66
8-41.	Solubility of TATB in various solvents		8-66
8-42.	Effects of gamma radiation on TATB		8-67
8-43.	Small scale gap test results for TATB		8-71
8-44.	Detonation characteristics of TATB		8-72
8-45.	Effects of moisture on the freezing point of TNT		8-74
8-46.	Removal of moisture from TNT		8-74
8-47.	Density as a function of loading pressure for TNT		8-74
8-48.	Surface tension of liquid TNT		8-75
8-49.	Dielectric constant of TNT		8-75
8-50.	Solubility of TNT		8-75
8-51.	Specific heat, enthalpy, and entropy of TNT		8-76
8-52.	Thermal diffusivity of TNT		8-76
8-53.	Isomers of TNT		8-83
8-54.	Nitrobody concentration for a six nitrator system		8-84
8-55.	Impurities present in TNT		8-85
8-56.	Impact sensitivity of TNT		8-87
8-57.	Gap test results for TNT		8-87
8-58.	Detonation pressure of TNT		8-88
8-59.	Fragmentation effects of TNT		8-88
8-60.	Effects of confinement on TNT detonation products		8-89
8-61.	Crystal modifications of ammonium nitrate		8-92
8-62.	Specific heat of ammonium nitrate		8-93
8-63.	Properties of amatols		8-97
8-64.	Detonation characteristics of amatols		8-98
8-65.	Composition A explosives		8-100
8-66.	Cyclotol properties		8-103
8-67.	Gap test results for composition B		8-105
8-68.	Detonation characteristics of composition C explosives		8-111
8-69.	Properties of octols		8-114
8-70.	Crater volume in mild steel targets		8-116
8-71.	Gap tests for 75/25 octol		8-116
8-72.	Gap test results for 50/50 pentolite		8-119
8-73.	General characteristics of tetrytols		8-122
8-74.	High blast explosives		8-125
8-75.	HTA-3 composition		8-126
8-76.	PBX compositions		8-131
8-77.	Compositions and characteristics of dynamites		8-133

Digitized by Google

000402

		Paragraph	Page
Tables (Cont)			
9-1.	Distribution of propellant energy		9-1
9-2.	Composition and properties of propellants		9-1
9-3.	Burning rate parameters for several standard gun propellants		9-7
10-1.	Infrared flare formulas		10-2
10-2.	Red-green flare system, parts by weight		10-2
10-3.	Amount of smoke agent per cubic meter of standard smoke		10-3
10-4.	Typical formulas for igniter and tracer compositions		10-4
10-5.	Properties of pyrophoric metals		10-5
10-6.	Maximum volumetric heats of reaction for metals reacting with fluorocarbons		10-5
10-7.	Delay compositions		10-6
10-8.	Black powders used in pyrotechnics		10-7
10-9.	Ignition mixtures		10-7
11-1.	French secondary explosives		11-1
11-2.	French chlorate cheddites		11-2
11-3.	French perchlorate cheddites		11-3
11-4.	CSE silicon explosives		11-3
11-5.	German secondary explosives		11-4
11-6.	Italian explosives		11-4
11-7.	Esplosivi da mina gelatinosi con nitroglicerina		11-6
11-8.	Esplosivi da mina polverulenti con nitroglicerina		11-7
11-9.	Esplosivi da mina polverulenti senza nitroglicerina		11-7
11-10.	Japanese explosives		11-9
11-11.	Russian explosives		11-10
11-12.	Some ammonits formulations		11-11
11-13.	Russian brown powders		11-12
11-14.	Russian black powders		11-12
11-15.	Detonity		11-12
11-16.	Granulity		11-13
11-17.	Spanish explosives		11-13
11-18.	Spanish artigrisu explosives		11-14
11-19.	Swedish explosives		11-15
11-20.	Hexotonal		11-15
11-21.	Swiss explosives		11-16
11-22.	Ammonpentrinits		11-16
11-23.	Penthrinits		11-17
12-1.	Summary of hazard classification and storage compatibility groupings		12-12
12-2.	Storage compatibility groups for explosives		12-17
12-3.	Classification system		12-18
12-4.	Hazard classifications/compatibility groups		12-18
12-5.	Quantity-distance classes for explosives and ammunition		12-24
12-6.	Toxicity of United States military explosives		12-25
12-7.	Deleted		
12-8.	Deleted		
12-9.	Deleted		
12-10.	Deleted		
12-11.	Deleted		
12-12.	Deleted		
12-13.	Deleted		
12-14.	Deleted		

Digitized by Google

000403

	Paragraph	Page
Tables (Cont)		
12-15. Deleted		
12-16. Deleted		
12-17. Deleted		
12-18. Deleted		
12-19. Deleted		
12-20. Deleted		
12-21. Deleted		
13-1. Color tests		13-1
13-2. Special correlations of aromatic nitro compounds, nitramines, and nitrates		13-8
14-1. Special requirements for open storage between earth covered magazines		14-8
14-2. Special requirements for open storage between magazines that are not earth covered		14-9
15-1. Minimum safe distance between RF transmitters and electric blasting operations		15-5
15-2. Minimum safe distances between mobile RF transmitters and electric blasting operations		15-5
15-3. Minimum safe distance between TV and FM broadcasting transmitters and electric blasting operations		15-6
15-4. Decontaminating chemicals		15-9
15-5. High explosive reclamation		15-12
15-6. Propellant reclamation		15-14
15-7. Pyrotechnic reclamation		15-15
Taliani test	6-16	6-3
TATB (see triamino-trinitrobenzene)		
TEGN (see triethylene glycoldinitrate)		
Temperature and humidity test	5-11	5-7
Territ	11-8	11-16
Test		
90°C Dutch weight loss	6-19	6-3
Adiabatic sensitivity	5-19	5-9
Ballistic mortar	3-5	3-4
Ballistic pendulum	3-5	3-4
Cap test	6-10	6-2
Card gap test	6-9	6-2
Closed bomb test, propellants	6-7	6-1
Compatibility, propellants	6-2	6-1
Cook-off temperature test	5-6	5-5
Cylinder expansion test	5-21	5-9
Deflagration to detonation transition, propellants	6-4	6-1
Detonation velocity test	5-5	5-3
Development	10-3	10-9
Differential thermal analysis	3-5	3-5
Electrostatic sensitivity	3-5, 5-4, 6-11	3-4, 5-3, 6-2
Evaluation	10-3	10-9
External heat test, propellants	6-3	6-1
Explosion temperature	6-17	6-3
Flying plate test	5-9	5-7
Forty foot drop test	5-14	5-8
Fragmentation test	5-20	5-9
Friction sensitivity	5-7, 6-12	5-5, 6-2

Digitized by Google

	Paragraph	Page
Test (Cont)		
Gap tests	5-8	5-7
Growth and exudation test	5-15	5-8
Heat, 100°C and 75°C	3-5	3-5
Heat tests, propellants, 134.5°C and 120°C	6-5	6-1
High loading rate compression test	6-14	6-2
Impact sensitivity	3-5, 5-3, 6-13	3-4, 5-2, 6-2
Incendiary heat output	10-3	10-11
Jolt test	5-12	5-7
Jumble test	5-13	5-7
KI (potassium iodide)	3-5	3-5
LANL large scale gap test	5-8	5-7
LANL small scale gap test	5-8	5-7
LLNL reactivity	3-5	3-5
Low loading rate compression test	6-15	6-2
Malfunction	10-3	10-9
Multiple fragment impact test, propellant	6-23	6-4
NATO	10-3	10-9
NSWC small scale gap test	5-8	5-7
PX gap test	5-8	5-7
Pyrolysis	3-5	3-5
Pyrotechnic light output	10-3	10-9
Pyrotechnic smoke output	10-3	10-10
Rifle bullet impact test	5-16	5-3
Service	10-3	10-9
Shaped charge jet impact test, propellant	6-20	6-4
Shaped charge jet spall test, propellant	6-21	6-4
Shock sensitivity	3-5	3-4
Single fragment impact test, propellant	6-22	6-4
Skid tests	5-18	5-9
Strand burner test	6-18	6-3
Surveillance	10-3	10-9
Surveillance test	6-8	6-2
SUSAN test	5-17	5-8
Taliani test	6-16	6-3
Temperature and humidity test	5-11	5-7
Thermal sensitivity	3-5, 5-8	3-4, 5-7
Thermal gravimetric analysis	3-5	3-5
Transport vibration test	5-10	5-7
Trauzl lead block test	3-5	3-4
Vacuum stability	3-5, 5-2, 6-6	3-5, 5-2, 6-1
Tetracene		
Brisance	7-6	7-16
Characteristics	7-6	7-15
Destruction	15-3	15-1
History	2-7	2-9
Manufacture	7-6	7-15
Packing	14-2	14-1
Reactivity	7-6	7-16
Sensitivity	7-6	7-16
Shipment	14-5	14-10
Specification	7-6	7-16
Stability	7-6	7-16
Tetritol	11-7	11-14
Tetritoly	11-6	11-13

Digitized by Google

000405

	Paragraph	Page
Tetryl (see trinitrophenylmethylnitramine)		
Tetrytols		
Brisance	8-6	8-122
Characteristics	8-6	8-121
Destruction	15-3	15-1
Manufacture	8-6	8-121
Packing	14-2	14-1
Reactivity	8-6	8-122
Sensitivity	8-6	8-122
Shipment	14-5	14-10
Stability	8-6	8-122
Toxicity	12-14	12-47
Thermal conductimetric analysis	10-4	10-12
Thermal gravimetric analysis	3-5	3-5
Thermal sensitivity	3-5	3-4
Thermochemistry, propellants	9-3	9-2
Thermogravimetry, pyrotechnics	10-4	10-12
Thin layer chromatography	13-3	13-4
TMETN (see trimetholethane trinitrate)		
TNT (see trinitrotoluene)		
Tontia	11-7	11-14
Torpex		
Brisance	8-6	8-129
Characteristics	8-6	8-128
Destruction	15-3	15-1
Manufacture	8-6	8-128
Packing	14-2	14-1
Sensitivity	8-6	8-123
Shipment	14-5	14-10
Stability	8-6	8-129
Toxicity	12-14	12-48
Totalit	11-9	11-17
Toxicity	12-14	12-45
Tracers	3-4, 10-1	3-1, 10-4
Tramex	11-9	11-17
Transport vibration test	5-10	5-7
Trauzl lead block test	3-5	3-4
Triamino-trinitrobenzene		
Brisance	8-4	8-72
Characteristics	8-4	8-66
Destruction	15-3	15-1
Manufacture	8-4	8-70
Packing	14-2	14-1
Sensitivity	8-4	8-71
Shipment	14-5	14-10
Stability	8-4	8-72
Triethylene glycoldinitrate		
Brisance	8-2	8-26
Characteristics	8-2	8-22

Digitized by Google

000406

	Paragraph	Page
Triethylene glycoldinitrate (Cont)		
Destruction	15-3	15-1
Manufacture	8-2	8-25
Packing	14-2	14-1
Reactivity	8-2	8-22
Sensitivity	8-2	8-26
Shipment	14-5	14-10
Stability	8-2	8-26
Trimethylolethane trinitrate		
Brisance	8-2	8-26
Characteristics	8-2	8-26
Destruction	15-3	15-1
Manufacture	8-2	8-26
Packing	14-2	14-1
Reactivity	8-2	8-26
Sensitivity	8-2	8-26
Shipment	14-5	14-10
Stability	8-2	8-27
Trinitrophenylmethylnitramine		
Brisance	8-3	8-52
Characteristics	8-3	8-45
Destruction	15-3	15-1
History	2-6	2-7
Manufacture	8-3	8-49
Packing	14-2	14-1
Reactivity	8-3	8-48
Sensitivity	8-3	8-51
Shipment	14-5	14-10
Stability	8-3	8-55
Toxicity	12-14	12-45
Trinitrotoluene		
Brisance	8-4	8-88
Characteristics	8-4	8-72
Destruction	15-3	15-1
History	2-6, 2-7	2-6, 2-8
Manufacture	8-4	8-83
Packing	14-2	14-1
Reactivity	8-4	8-77
Sensitivity	8-4	8-87
Shipment	14-5	14-10
Specification	8-4	8-86
Stability	8-4	8-89
Toxicity	12-14	12-47
Triplastita	11-7	11-14
Triple-base propellant	3-4, 9-2, 9-5	3-2, 9-2, 9-4
Tritolita	11-7	11-14
Tritolital	11-7	11-14
Tritonal		
Brisance	8-6	8-123
Characteristics	8-6	8-123
Destruction	15-3	15-1
Manufacture	8-6	8-123
Packing	14-2	14-1
Reactivity	8-6	8-123
Sensitivity	8-6	8-123

Digitized by Google

000407

	Paragraph	Page
Tritonal (Cont)		
Shipment	14-5	14-10
Stability	8-6	8-123
Toxicity	12-14	12-48
Uglenity	11-6	11-13
Ultraviolet spectroscopy	13-5	13-7
Umbrite	11-4	11-9
Vacuum stability test		
Definition	3-5	3-5
Explosives	5-2	5-2
Propellants	6-6	6-1
Visible spectroscopy	13-5	13-7
Waste recycling	15-6	15-12
Water shipment of explosives and ammunition	14-5	14-15
Waterproofing agents, pyrotechnic	10-1	10-1
Web	9-6	9-5
Wet chemical identification methods	13-2	13-1
White smoke	3-4, 10-1	3-3, 10-2
Zernogranoolity	11-6	11-13

Digitized by Google

000408

By Order of the Secretary of the Army:

JOHN A. WICKHAM, JR.
General, United States Army
Chief of Staff

ROBERT M. JOYCE
Major General, United States Army
The Adjutant General

Distribution:

To be distributed in accordance with DA Form 12-40, Requirements for Section IV, General Information Applicable to All Organizations Which Have a Conventional Munitions Mission.

☆U.S. GOVERNMENT PRINTING OFFICE: 1989 242-451/05159

Digitized by Google

Digitized by Google

Digitized by Google

000411