FLORENCE COPPER, INC.

UIC PERMIT APPLICATION

FLORENCE COPPER PROJECT – PRODUCTION TEST FACILITY

ATTACHMENT K – INJECTION PROCEDURES

Table of Contents

Table of Contents 1

List of Figures 1

List of Exhibits 1

K.1 Introduction 2

K.2 ISCR Description 2

K.2.1 PTF ISCR Area 2
K.2.2 Development of the PTF Well Field Area 2
K.2.3 BHP Copper Hydraulic Control Test Facility 3

K.3 PTF Injection Procedures 3

K.3.1 PTF Facilities and Operations 3
K.3.2 Process Flows 4
K.3.3 Lixiviant Composition 5
K.3.4 PTF Injection Procedures 5
K.3.4.1 Pre-Operational Review 5
K.3.4.2 Injection System and Monitoring Devices 5
K.3.4.3 Recovery System 6
K.3.4.4 Procedures for Contingency Conditions 7
K.3.4.5 Procedures for Monitoring Hydraulic Control 7
K.3.5 Reporting and Maintenance of Records 7

List of Figures

Figure K-1 Existing Facilities

Figure K-2 Production Test Facility Layout

List of Exhibits

Exhibit K-1 ISCR and SX/EW Flow Sheet

Exhibit K-2 Operations Plan

K.1 Introduction

This Attachment K has been prepared in support of an application (Application) by Florence Copper, Inc. (Florence Copper) to the United States Environmental Protection Agency (USEPA) for issuance of an Underground Injection Control Class III (Area) Permit (UIC Permit) for the planned Production Test Facility (PTF), to be located at the Florence Copper Project (FCP) site in Pinal County, Arizona. During PTF operations, pilot-scale tests will be conducted to develop information needed to evaluate equipment and treatment technologies that may be used during future full scale in-situ copper recovery (ISCR) operations. The information included in this Attachment describes PTF operational injection procedures as required by 40 Code of Federal Regulations (CFR) 146.34(a)(10) and for Attachment K of USEPA Form 7520-6. The proposed procedures address injection and recovery of ISCR solutions for PTF operations and closely track procedures prescribed in UIC Permit No. AZ396000001. Although the PTF operations will focus on pilot-scale tests, the injection procedures and related controls for both the PTF and planned future phases of commercial ISCR operations will be similar except as governed by the size of operations.

K.2 ISCR Description

K.2.1 PTF ISCR Area

The PTF area occupies approximately 13.8 acres within the 160-acre Arizona State Mineral Lease No. 11-26500 (State Land Lease) that is located within the FCP property owned by Florence Copper. The PTF well field area lies entirely within the area identified as the "mine zone" in the aquifer exemption that USEPA granted on May 1, 1997 in conjunction with UIC Permit No. AZ396000001. The area labeled as the "mine zone" is the area authorized under UIC Permit No. AZ396000001 for the injection of dilute sulfuric acid solutions (lixiviant) into the subsurface oxide zone for the purpose of dissolving and recovering copper. Within the PTF well field area, the oxide zone is approximately 430 feet below ground surface (bgs) and is in the upper portion of the bedrock beneath the FCP site. Aquifer Protection Permit (APP) No. P-106360, issued by Arizona Department of Environmental Quality (ADEQ) on July 3, 2013, similarly authorizes the installation of injection and recovery wells in the PTF well field area, as well as authorizes the construction of surface facilities to support PTF operations.

The lateral boundary of the requested aquifer exemption extends 500 feet beyond the the mine zone boundary as delineated in Appendix A of the 1997 UIC Permit No. AZ396000001. The PTF well field and associated surface facilities includes a portion of Section 28, Township 4 South, Range 9 East, Gila and Salt River Base and Meridian.

K.2.2 Development of the PTF Well Field Area

As described below, a small array of test wells will be installed and operated during PTF operations. Each well installed in the PTF well field will be constructed in accordance with Class III injection well standards. The injection and recovery wells will be arranged in a five-spot pattern that effectively surrounds each injection well with four recovery wells. The injection wells will be used to inject lixiviant into the oxide zone to dissolve the copper oxide minerals and liberate the copper into solution. The resulting copper-laden solution, referred to as pregnant leach solution (PLS), will be pumped from the formation by the recovery wells. Copper will be recovered from the PLS by means of a solvent extraction/electrowinning (SX/EW) process. Once copper has been recovered, the chemistry of the "barren" PLS solution (raffinate) will be adjusted and re-injected as lixiviant back into the oxide zone.

Well construction procedures and design details are described in Attachments L and M, respectively, of this Application.

K.2.3 BHP Copper Hydraulic Control Test Facility

In 1997, BHP Copper constructed a test facility to demonstrate, as required by the APP and the UIC Permit pertaining to that facility, that hydraulic control could be maintained during the injection and recovery of in-situ solutions using wells of the design and configuration approved in those permits. The test facility included 20 test wells (four injection wells, nine recovery wells, and seven observation wells) located in a bermed area of approximately 2 acres. Two of the observation wells were located between an injection and a recovery well, and were equipped to sample at three depth intervals within the injection and recovery zone. The other observation wells were located outside the outer ring of recovery wells. The test infrastructure also included supporting surface facilities. The surface facilities included a double-lined water impoundment, a tank farm next to the impoundment, and pipelines connecting the test well block, the tank farm and the impoundment. The aforementioned components of the test facility are still on the site and are shown on Figure K-1, including facilities and infrastructure constructed and used by other previous owners of the site.

All surface facilities associated with the BHP Copper test facility were designed, installed, and operated to prevent discharges. The impoundment was equipped with a leak collection and removal system. The tanks in the tank farm were located on an impermeable surface that drains to the impoundment. The pipelines connecting the test well block to the tank farm and impoundment were placed in an open and lined channel, and a lined sump was installed at each well for collecting potential spills from wellhead piping. Similarly, the injection, recovery, and observation wells were designed and constructed in compliance with Class III standards and were operated to monitor and prevent in-situ solutions from migrating beyond the injection and recovery zone.

During the test, lixiviant was injected from November 1, 1997 through February 9, 1998. Injection of lixiviant occurred at a rate of up to 40 gallons per minute (gpm) per well. Because there were more recovery wells than injection wells, the recovery rate per well was typically less than the injection rate per well. The average total lixiviant injection and total PLS recovery rates were approximately 120 and 150 gpm, respectively, which induced a cone of depression around the active well field, creating inward groundwater flow and thereby establishing and maintaining hydraulic control.

After injection was discontinued, the injection wells were used to rinse the formation with water in order to facilitate groundwater restoration. Water injected for rinsing purposes included formation groundwater and neutralized process water that was stored in the impoundment. All groundwater, including PLS, pumped from the test wells during the hydraulic control test and during the rinsing period following the test was placed in the water impoundment for disposal by evaporation.

Although the hydraulic control test was successfully concluded, BHP Copper deferred constructing a commercial-scale facility due to low copper prices in 1998 and eventually sold the FCP property in December 2001. Hydraulic control was maintained from the time that injection began in 1997 until December 2001 when constituent concentrations in groundwater pumped from the well field were determined to meet closure requirements of UIC Permit No. AZ396000001 (less than Maximum Contaminant Limits [MCLs] or pre-operational concentrations, if the pre-operational concentrations exceeded the MCLs). After water quality criteria were met, hydraulic control pumping continued until authorization to cease pumping was obtained from USEPA in September 2004.

K.3 PTF Injection Procedures

Background information and proposed injection procedures for the PTF are described below.

K.3.1 PTF Facilities and Operations

The PTF facilities and operations will be comparable in design to those of planned future phases of ISCR operations; however, will differ significantly in scale of operations.

The PTF will involve the installation and operation of 24 wells (four injection wells, nine recovery wells, seven observation wells, and four special-purpose monitoring wells equipped to collect groundwater samples from multiple depths). This well array will be installed in a new test well block located in the western part of the State Land Lease. It is anticipated that the maximum total lixiviant injection through the four injection wells will occur at a rate of approximately 240 gpm, and the total PLS recovery rate will be approximately 300 gpm. The proposed PTF facilities are shown on Figure K-2.

All PTF facilities will be constructed to prevent unauthorized discharges. The PTF test well block will be bermed to protect against storm water run-on and each well will be located in a containment sump. As shown on Figure K-2, a pipeline will connect the new test well block to tanks located at the SX/EW plant. The tanks will serve to temporarily store solutions as they are prepared for injection, circulated to the PTF SX/EW plant or to portable water treatment units for reuse, or to the neutralization circuit prior to being placed in the PTF water impoundment.

Hydraulic control will be maintained during PTF operations. It will be maintained from the time that the injection of lixiviant begins until the time that the groundwater quality is restored to a level that meets the criteria specified in the UIC Permit and APP. Hydraulic control will be maintained by using the recovery wells to remove in-situ solutions and an additional volume of groundwater necessary to maintain hydraulic control.

To monitor the success of hydraulic control, the amount of in-situ solutions injected and recovered will be recorded and compared at least once every 24 hours. Adjustments in injection and/or recovery rates will be made to ensure that recovery volumes are greater than injection volumes.

Hydraulic control will also be monitored by comparing groundwater levels in paired wells. At least four observation wells will be paired with recovery wells. The well pairs will be located equidistantly along the edge of the PTF test well field. The observation well will be the outer well of the pair. Each member of a well pair will be equipped with a pressure transducer so that groundwater levels can be measured and recorded. An inward hydraulic gradient (demonstrating hydraulic control) will exist if the groundwater levels in the recovery wells are lower than the groundwater levels in the paired observation wells. If the groundwater levels are higher, the injection and/or recovery flow rates will be adjusted to maintain a higher water level in the observation wells.

Hydraulic control will be maintained at all times including during periods where groundwater or other rinse solutions are injected during rinsing and closure operations.

K.3.2 Process Flows

Florence Copper has planned a variety of tests to be conducted during PTF operations for evaluating equipment and treatment technologies that may be applied to improve efficiency of planned future ISCR operations, reduce the consumption of groundwater, and reduce the volume of water and sediments placed in the water impoundments. A prerequisite for most of the tests is a sufficiently mature PLS (i.e., a PLS with an adequate grade, or concentration, of dissolved copper) that can be used to (1) forecast changes in PLS and lixiviant composition over time, and (2) evaluate treatment and recovery technologies and equipment.

To facilitate the maturation process, PLS may be re-acidified and re-circulated back for re-injection. Once the PLS is sufficiently mature, it will be subject to a variety of water treatment tests and will be used to evaluate the efficiency of copper recovery by the PTF SX/EW plant. Raffinate from the SX/EW plant and solutions from pilot-scale treatment may be piped to the tank farm area for neutralization and placement into the water impoundment. If the solutions are determined to meet the criteria discussed in Section K.3.3, they may be re-circulated for use as lixiviant.

A flow sheet illustrating PTF and SX/EW operations is provided with this Attachment as Exhibit K-1.

K.3.3 Lixiviant Composition

Details of lixiviant composition and monitoring are described in Attachments H and P of this Application, respectively. Florence Copper proposes to use the lixiviant composition limits specified in Part II.E.4 of UIC Permit No. AZ396000001.

Florence Copper will conduct pre-operational reviews before commencing injection, which will include monitoring lixiviant composition to verify that it meets the limits specified in the PTF UIC Permit. Monitoring and good management practices with respect to all in-situ solutions will ensure that the lixiviant constituents remain below the specified limits.

K.3.4 PTF Injection Procedures

PTF injection procedures are described below.

K.3.4.1 Pre-Operational Review

Before commencing operations in the PTF well field, Florence Copper operators will conduct a pre-operational review of all start-up procedures to ensure that the operations comply with UIC Permit conditions, as follows:

1. Mechanical integrity tests (Part I and Part II) have been conducted on all PTF wells and all wells have passed the tests.
2. All wells have been completed such that they will not inject solutions within the injection exclusion zone (within the top 40 feet of the oxide zone).
3. All core holes and all wells (except Class III wells and wells used for groundwater monitoring) located within 500 feet of the PTF well field have been abandoned in accordance with an approved Plugging and Abandonment Plan.
4. Allowable injection pressure, not to exceed 0.65 pounds per square inch per foot (psi/ft) of depth, has been established for each injection well.
5. Injection fluids have been checked and found to meet permit limitations.
6. Fresh groundwater has been injected, as needed, to assess the hydraulics of the injection and recovery patterns and to confirm that all monitoring devices and controls are in working order.

K.3.4.2 Injection System and Monitoring Devices

The injection system consists of the individual wells, pumps, manifolds, piping, and related controls and meters. Manifolds will be used to distribute lixiviant to injection wells and to collect PLS from recovery wells. As explained above, PLS may be re-circulated to concentrate copper in the PLS.

Mechanical controls and monitoring devices incorporated into the injection system are listed below and illustrated in the drawings in Figures 1 and 2 of the Operations Plan, included as Exhibit K-2 of this Attachment.

- A pressure transducer at each injection well head.
- A flow meter at each injection manifold for measuring flow rates (gpm).
- A totalizing flow meter for measuring cumulative flow (gallons) into each injection manifold.
- An isolation valve at each injection well.
- A flow meter at each injection well for measuring flow rates (gpm).
- A valve at each injection well for controlling flow.
- A pressure transducer to measure annular pressure above the packer.
- A pressure transducer to measure pressure in the injection zone.

Operators will use the injection well head pressure transducers to monitor injection pressures for loss of mechanical integrity, and ensure that the maximum allowable injection pressures are not exceeded at the wellheads. Allowable injection pressure will be calculated for each injection well. Actual pressures measured at each well head will be compared to the maximum allowable pressure(s) for the well, and will be adjusted as necessary to ensure injection pressures are within calculated allowable limits.

Operators will also use gauges and meters at each injection manifold to monitor injection pressures and flows on a manifold-by-manifold basis.

Allowable injection pressure will be calculated for each injection well as described in Attachment H of this Application. Actual pressures measured at each manifold will be compared to the maximum allowable pressure(s) for the well with the lowest allowable pressure, and will be adjusted as necessary to ensure injection pressures are within calculated allowable limits. Injection pressure will also be measured at each well head.

Every 24 hours, the totalized flow to the injection manifold will be summed and compared to the summed totalized flow from all of the recovery wells. If the summed total flow from recovery wells exceeds the total flow into injection wells, hydraulic control will be verified. If the summed total flow from recovery wells does not exceed the total flow into injection wells, adjustments to recovery and/or injection flow rates will be made accordingly to restore hydraulic control.

Reduced flow in an injection well may be due to changes in formation characteristics or clogging of the formation or the well screens. A sudden increase in flow may indicate a break/failure of the well casing. If a casing breach is believed to have occurred, the operator will shut down that well by turning off the flow switch and will conduct relevant inspections. Inspections and related reporting will be conducted in accordance with Plans for Well Failures described in Attachment O of this Application.

The injection and recovery systems will be connected to one or more tanks in the PTF area. The tanks will be fitted with a high-level alarm and level indicators. Both alarm and level indicator signals will be routed to the control room. An alarm will actuate if either a line fails or the tank high level is exceeded. The feed pump to the tank will be disabled automatically. Spilled solutions will be captured in a lined collection sump able to contain 110 percent of the volume of the tank and line. The spilled volume will be pumped back into the circuit for reuse.

Solutions pumped through pipelines located in pipeline channels between the PTF well field and the SX/EW plant will be metered for flow and pressure. Four lines may be used in the pipeline channels: lixiviant, PLS, rinse water, and a fourth line to be used as a backup in case one of the other three lines fails. An electronic feedback system will alarm if a pump fails, flow is interrupted, or flow is not in logical mode when a pump is activated. Loss of pressure or pressure exceeding a high setting will cause the pump to automatically shut down. In the event of such an occurrence, the plant operator will inspect the system. A broken line will be repaired within 48 hours and spilled solutions captured in spill control sumps in the lined channels will be pumped back into the process systems or to the water impoundment.

K.3.4.3 Recovery System

The recovery system is similar to the injection system. It is comprised of the individual wells, pumps, recovery manifolds, piping, and related meters and controls as shown on Figures 1 and 2 of the Operations Plan, included as Exhibit K-2 of this Attachment. The recovery system includes:

- a continuous reading flow meter (gpm) at the recovery manifold;
- a totalizing flow meter (gallons) at the recovery manifold;
- an isolation valve at each recovery well;
- a flow meter at each recovery well; and
- a pressure transducer at each recovery well.

The flow meters on the recovery manifolds will allow the operators to monitor recovery flow rates, and use the data to compare against injection flow rates as described above. Inspections and related reporting will be conducted in accordance with Plans for Well Failures (Attachment O of this Application).

K.3.4.4 Procedures for Contingency Conditions

Procedures for contingency conditions and associated response actions in the PTF area are summarized in Table 1 of Exhibit K-2, Operations Plan. Many of the contingency conditions will be identified electronically with alarms. Others will be identified by visual inspections. All require indicated follow-up actions. Actions that involve a well repair or abandonment in response to a contingency condition are described in detail in Plans for Well Failures (Attachment O of this Application).

K.3.4.5 Procedures for Monitoring Hydraulic Control

Hydraulic control will be monitored every 24 hours by comparing total flows into and out of the PTF well field, and by monitoring every 24 hours the water levels in paired observation and recovery wells. If hydraulic control is not indicated, the rate of injection will be decreased and/or the rate of recovery will be increased to achieve hydraulic control.

K.3.5 Reporting and Maintenance of Records

All data regarding operations, inspections, testing, and responses will be collected, reported, and maintained to comply with the requirements of the UIC Permit, and described in detail in Attachment P of this Application.

HUNT HIGHWAY

POSTON BUTTE

ADMINISTRATION BUILDING

CONOCO PILOT FACILITY

NORTH SIDE CANAL

Gila River

EXISTING WATER IMPOUNDMENT

EXISITNG PIPING

EXISITNG PROCESS TANK AREA

M28-LBF, M29-UBF, M27-LBF, M26-O, M6-GU, M9-S, M8-O, M7-GL, O19-O, P19-2-O, M20-O, M19-LBF, M30-O, M33-UBF, PW-2, O19-GL, M21-UBF, M31-LBF, O13-O, P13-1-O, P13-GL, P19-1-O, P13-2-O, M54-LBF, P8-2-O, P8-GU, O8-GU, P8-1-O, O8-O, DM-D, ASHAFT, M23-UBF, M22-O, OB-6, PW1-1, PW2-1, OB2-1, OB1-1, DM-A, DM-C, M32-UBF, DM-B, PW3-1, M15-GU, M14-GL, OB3-1, P2-90, PW-1, OW-2, OB-2, P1-80, SUPPLY WELL 2, SUPPLY WELL 1, O28-GL, BIA9, OB4-1, WW3, OW-3, OW-1, OB-1, BIA10B, O28-1-O, O28-2-S, P28-2-O, P28-GL, P28-1-O, M25-UBF, PW4-1, MF2, P15-O, O15-O, P15-GL, M24-O, O3-GL, OB7-1, PW7-1, PW2-2, OB2-2, M12-O, M10-GU, M13-S, M11-GL, DM-E, OB-4, OB-5 (OWB-6), M16-GU, M17-GL, P3-60, P4-40, O12-O, P12-O, O12-GL, P5-O, O5-1-O, O5-2-O, P49-O, O39-O, P39-O, O49-GL, O49-O, M18-GU, M1-GL, PW-4, M2-GU, M4-O, M5-S, M3-GL

N, W, E, S

0, 1,000, 2,000

SCALE IN FEET

LEGEND

- EXISTING POC WELL (UIC AZ396000001)
- DRY POC WELL TO BE PLUGGED AND ABANDONED
- NON-POC WELL
- BHP TEST WELL
- PTF WELL FIELD
- STATE MINERAL LEASE BOUNDARY
- PROPERTY BOUNDARY
- CONOCO UNDERGROUND MINE WORKINGS
- TOPOGRAPHIC CONTOUR
- 100 YEAR FLOOD PLAIN BOUNDARY

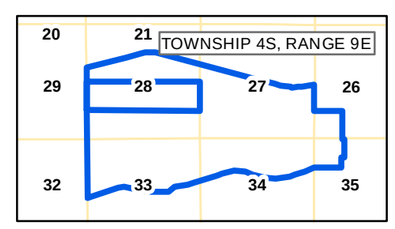

HALEY & ALDRICH

FLORENCE COPPER INC.
FLORENCE, ARIZONA

EXISTING FACILITIES

FLORENCE COPPER INC.

SCALE: AS SHOWN
MAY 2014

FIGURE K-1

G:\98706_CurisResources\Global\GIS\MapProjects\2013-09\3876-119-K1_Existing Facilities.mxd

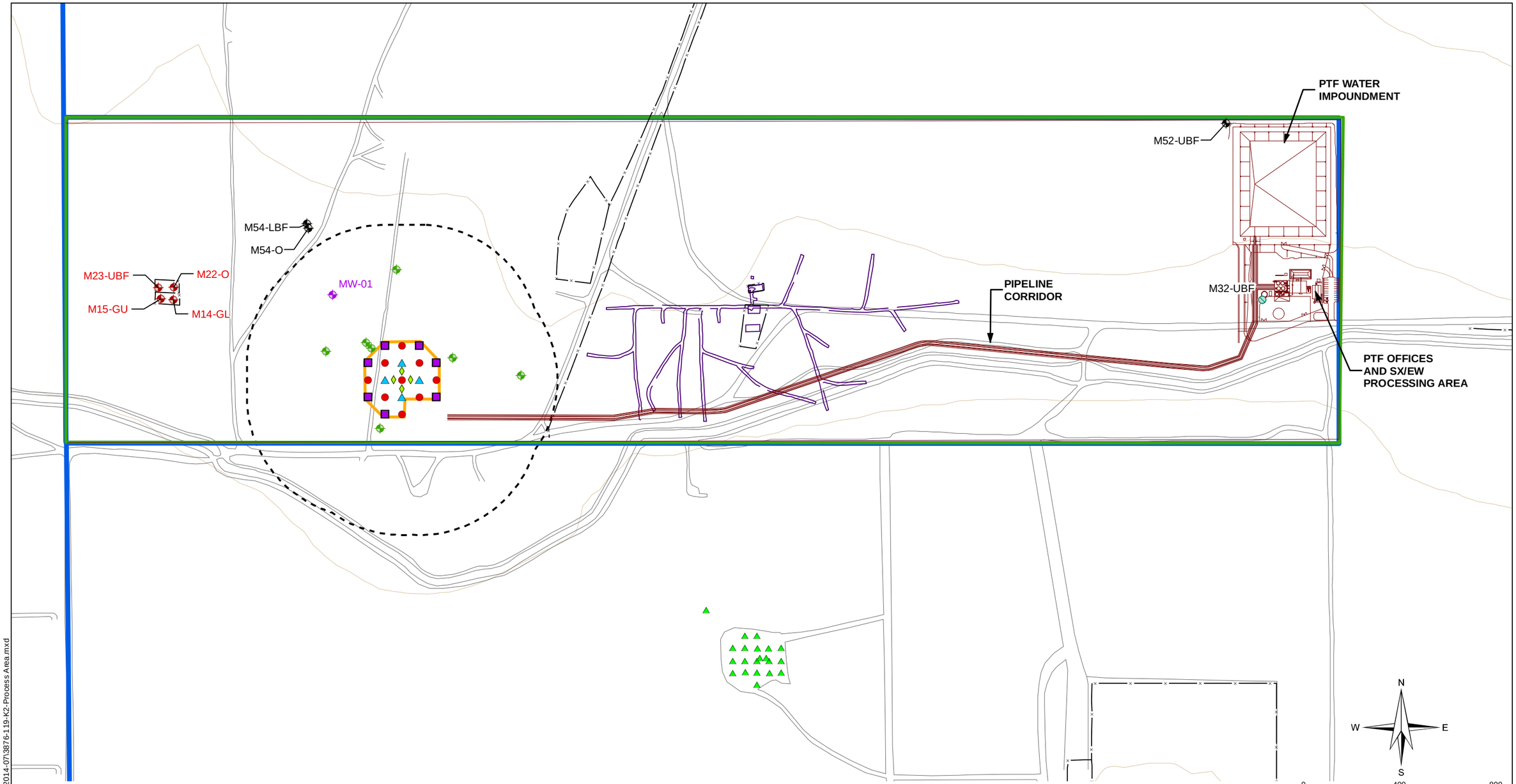

LEGEND

- MW-01 OPERATIONAL MONITORING WELL (APPROXIMATE LOCATION BASED ON REQUIREMENTS OF APP 106360)
- EXISTING PTF POC WELL
- DRY POC WELL TO BE PLUGGED AND ABANDONED
- APPROVED POC WELL - NOT DRILLED YET
- BHP TEST WELL
- SUPPLEMENTAL MONITORING WELL

PROPOSED TEST WELLS

- INJECTION
- OBSERVATION
- RECOVERY
- MULTI-LEVEL SAMPLING WELL

- CONOCO UNDERGROUND MINE WORKINGS
- PTF WELL FIELD
- STATE MINERAL LEASE BOUNDARY
- PROPERTY BOUNDARY
- AREA OF REVIEW
- CONTOUR (10 FT)

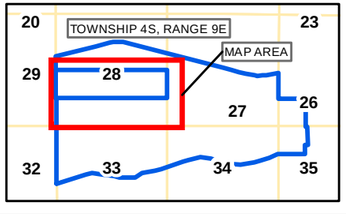

HALEY & ALDRICH

FLORENCE COPPER INC.
FLORENCE, ARIZONA

PRODUCTION TEST FACILITY LAYOUT

FLORENCE COPPER INC.

SCALE: AS SHOWN
JULY 214

FIGURE K-2

G:\38706_CurisResources\Global\GIS\MapProjects\2014-07\38776-119-K2-Process Area.mxd

Exhibit K-1

ISCR and SX/EW Flow Sheet

The following describes the flow streams and rates shown on the Overall Flow Sheet Drawing No. 000-FS-000 Rev 0. The streams and rates shown are based on experience of the previous owners of the property and the abbreviated test that was performed in the past. The input variables and assumptions for calculating the flow rates are described in the text below, and are based on technical specifications provided by Curis Arizona, Inc., the results of laboratory and pilot-scale field test work completed by previous owners, and the results of geochemical and hydrological modeling completed in 2010 by Schlumberger Water Services and Brown and Caldwell, respectively. The calculated rates are current "best-estimates" for the Production Test Facility (PTF). They will necessarily be refined over time as data is generated during the PTF pilot process.

Streams #1 & 2

The PTF pilot process begins with the solution that is injected (Stream #1) underground and subsequently recovered as Pregnant Leach Solution (PLS) (Stream #2) and pumped into the SX/EW processing plant. Curis Arizona has set the flowrate for each of the 4 injection holes at 60 gallons per minute (gpm). The flowrate for the center extraction well is also estimated to be 60 gpm. From previous laboratory and field testwork, the PLS copper content is estimated at 1.8 grams per liter (g/l) of copper in solution for the center (general) extraction well.

Streams #3 & 13

To ensure that all solution injected is recovered and to maintain hydraulic control, more solution must be recovered than what was injected. Based on previous test work by BHP Copper Inc. (BHP) the four injection holes will be surrounded by eight additional extraction wells. The flow from these peripheral wells will total 240 gpm which, when combined with the 60 gpm from the center well will constitute an excess of 60 gpm over and above what was injected. This excess will insure that all injected solutions are contained and controlled. As a side note, the eight peripheral wells are in turn surrounded by additional observation wells used for monitoring of the ground water to ensure that the containment method is indeed working as planned. The solutions from these eight peripheral wells (Stream #3) will contain copper; the copper content will vary from well to well depending on position relative to the injection holes and the flow of formation water to each particular well. The predicted copper content of Stream #3 is approximately 1.35 g/l. Verification of this value is one of the goals of the PTF. Because Stream #3 contains significant copper values, Stream #3 will be combined with Stream #2 in the PLS storage tank and subsequently pumped to the processing plant. In the case that the solutions from the peripheral wells do not contain sufficient copper values, Stream #3 may be diverted to the raffinate tank for recycle to the well field, or to the water impoundment for subsequent evaporation.

Stream #4

Due to the recirculating nature of Solvent Extraction and Electrowinning (SX-EW) operations, impurities can build up in the recirculating solutions. To combat such a build up in the electrowinning (EW) circuit, a small amount (0.4 gpm) of electrolyte (Stream #4) is removed from the circuit on a continuous basis and recycled to the PLS storage tanks for subsequent recovery of the contained copper in the Solvent Extraction (SX) plant.

Stream #5

The solutions recovered from the PTF well field (Streams #2 & #3) are first pumped into the PLS storage tanks on the surface for blending of the solutions from the various wells. The electrolyte "bleed" (Stream #4) from the EW circuit is also blended with the PLS in the storage tanks. Two tanks are joined together to give the desired volume while keeping the individual tanks small enough for shop fabrication, truck transport to the project site, and subsequent relocation, if desired, in the future. The blended solution in the tanks is then pumped into the SX/EW plant at the same total rate as the input to the tanks.

Stream #6

The electrolyte bleed stream (Stream #4) carries with it a small amount of acid. That acid must be replaced to keep the acid concentration in the electrolyte constant. Stream #6 is the electrolyte make-up acid and is approximately 0.04 gpm.

Stream #7

The electrolyte bleed stream (Stream #4) also contains water that must be replaced to keep the total volume of the system constant. Stream #7 is the electrolyte make-up water and is approximately 0.4 gpm.

Stream #8

What goes into the processing plant also comes out (as Raffinate), because the process is zero-discharge. Therefore, 300.4 gpm (the sum of PLS, Electrolyte Bleed, and Acid make-up) leaves the processing plant.

Stream #9

Stream #8 is the "bleed off" from the Raffinate that is needed to counter balance the impurities that build up in the process flow stream over time and to adjust for the volumes of make-up water and acid added to the process. This "bleed" is estimated at 61.5 gpm, based on maintaining the total injection rate at 240 gpm and adjusting for the volumes of formation water

(Stream #13), acid (Streams #6 & 11), and electrolyte make-up water (Stream #7). The bleed-off reports to the water impoundment for neutralization and evaporation.

Streams #10 & 11

Stream #10 is simply the raffinate (Stream #8) minus the bleed (Stream #9) to which the make-up acid (Stream #11) will be added. The acid make-up (Stream #11) is the acid needed to replace the acid in the bleed plus the acid needed for leaching of the ore which is estimated to be 1.1 gpm.

Stream #12

Stream #12 is simply the difference between what comes out of the process plant and what was bled off plus what was added back. The rate for Stream #12, therefore, is the same as that for Stream #1 (i.e., what is injected underground) and thus balances the volume of the Raffinate tank. Based on the streams shown on Drawing 000-FS-000, the rate for Stream #12 is equal to the sum of the rates for Streams #5, #6, #7 & #11 minus the sum of Stream #4 & #9.

Stream #13

The excess water that is pumped from underground to ensure that all injected solutions are recovered and the water that is used for rinsing is shown on the Process Flow Diagram as "formation water". This water comes from the underground water table that is present in the formation encompassing the PTF well field area. The flow rate for formation water is the 60 gpm needed for hydraulic control during operation of the PTF test but is expected to increase during the rinsing operation when injection ceases and extraction continues.

Stream #14

Stream #14 is the lime that is needed to neutralize the acid contained in the raffinate bleed (Stream #9). Lime will also react with the copper and iron that is in the raffinate. The total lime consumption is estimated to be close to 5,979 lbs/day.

Stream #15

The reaction of the lime (Stream #14) with the raffinate (Stream #9) will produce a solid precipitate which is mostly gypsum with some copper and iron hydroxide mixed in. These solids will be contained in a large pond for the life of the test. The pond was sized to contain 1.6 million cubic feet of solids. The estimated volume of solids going to the pond (Stream #15) is 258 cubic feet per day so the pond will easily contain all of the solids for the life of the project.

Stream #16

The PTF is intended to test the leaching characteristics of the underground deposit and the effect of recirculating the solutions. Before the solutions are recirculated, the copper is removed in the SX-EW plant. Stream #16 is the metallic copper produced in the PTF and is estimated to be produced at a rate of 836 tons per year.

Registered Professional Engineer (Mining)
CERTIFICATE NO
22958
THOMAS L
DRIELICK
Date Signed 2-27-12
ARIZONA U.S.A.
Expires 9/20/14

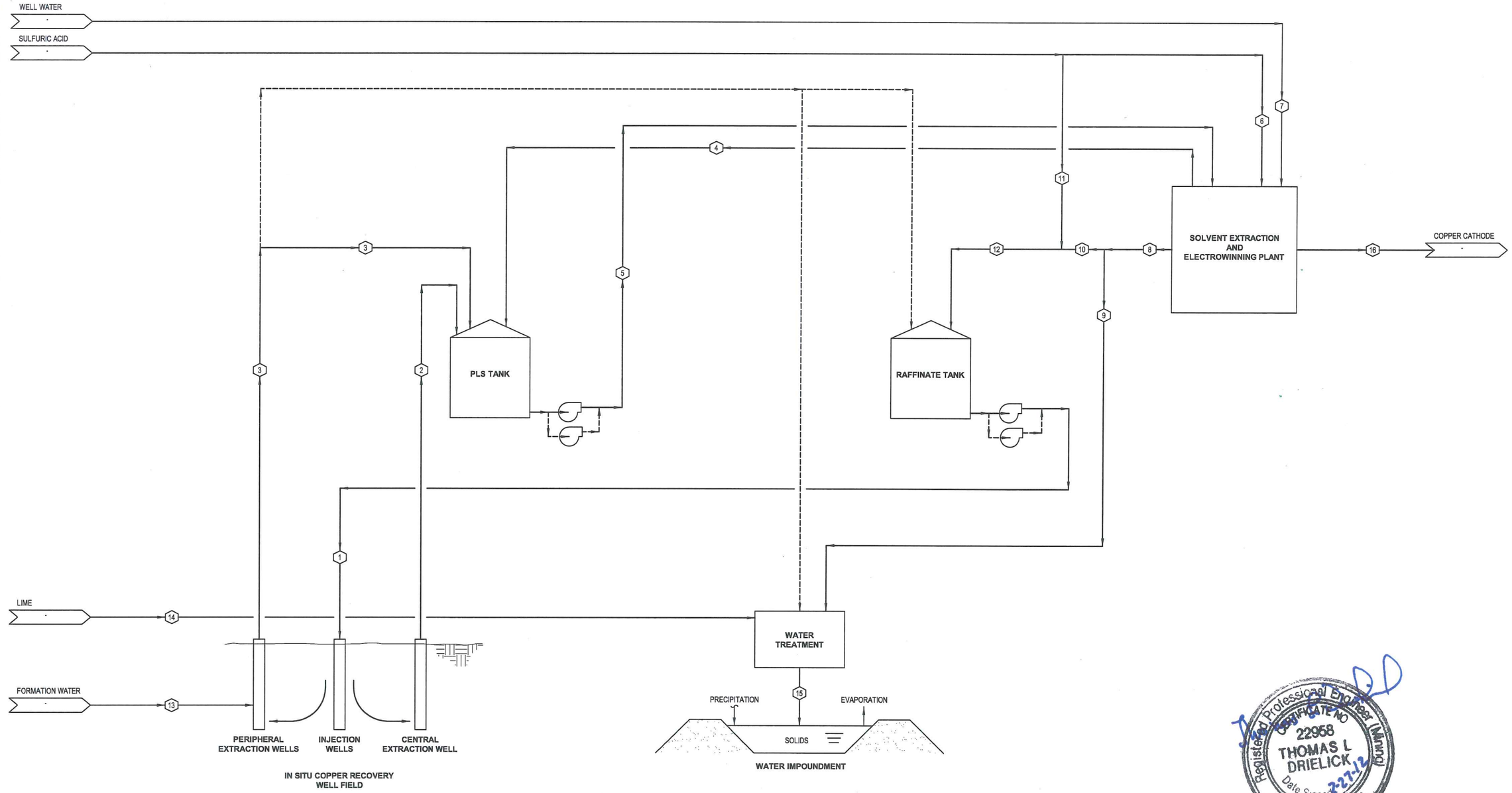

Stream Numbers	1	2	3	4	5	6	7	8	9	10	11	12	13	14	15	16
Description	Leach Solution	PLS	Peripheral Extraction	Electrolyte Bleed	SX Feed	Electrolyte Make-Up Acid	Electrolyte Make-Up Water	Total Raffinate	Bleed to Treatment	Raffinate to Acid Mixing	Acid Addition	Acidified Raffinate	Formation Water	Lime	Solids	Copper
Nominal Flow, GPM	240	60	240	0.4	300.4	0.04	0.4	300	61.5	238.9	1.1	240	60	5979 lbs/d	258 ft^3/d 9000 lbs/d	836 ton/a

LEGEND

- MAIN PROCESS FLOW
- ALTERNATIVE PROCESS FLOW
- EQUIPMENT PACKAGE

Registered Professional Engineer (Mining)
CERTIFICATE NO. 22958
THOMAS L. DRIELICK
Date Signed 2-27-12
ARIZONA, U.S.A.
Expires 9/30/14

HDI CURIS

REFERENCES		REFERENCES	
DWG. NO.	TITLE	DWG. NO.	TITLE

REVISIONS					
NO.	DESCRIPTION	BY	APP'D	DATE	CLIENT

REVISIONS					
NO.	DESCRIPTION	BY	APP'D	DATE	CLIENT
0	ISSUED FOR PERMITTING	MFV	PDM	27 FEB 12	

SCALE: NONE		DATE
DESIGNED BY	MFV	NOV 11
DRAWN BY	FC	NOV 11
CHECKED BY	MFV	FEB 12
PROJECT MGR	MORSE	FEB 12
CLIENT APPR.		

m3 ARCHITECTURE ENGINEERING CONSTRUCTION MANAGEMENT www.m3eng.com

PRODUCTION TEST FACILITY

OVERALL FLOW SHEET

JOB NO. M3 PN-110129

DWG NO. 000-FS-000

REV NO. 0 | DATE 27 FEB 12

File: P:\2011\110129\PROCESS (541)\541.3 Dwgs & Flow Sheets\000FS000.dwg LAST UPDATE: FEB 27, 2012 @ 12:21 PM BY: ke1778 LAST REV: P1 PLOT SCALE: 1:1

File: P:\2011\110129\PROCESS (541)\541.3 Dwgs & Flow Sheets\000FS000.dwg LAST UPDATE: 2/27/2012 12:20 PM BY: KE1778

PDM

Exhibit K-2

Operations Plan

FLORENCE COPPER, INC.

UIC PERMIT APPLICATION

FLORENCE COPPER PROJECT – PRODUCTION TEST FACILITY

EXHIBIT K-2: PRODUCTION TEST FACILITY OPERATIONS PLAN

Table of Contents

Table of Contents 1

List of Figures 1

List of Tables 1

List of Appendices 1

INTRODUCTION 2

OPERATIONS 2

Pre-Operational Review 2

Injection System and Monitoring Devices 3

Injection Pressures *3*
Injection Monitoring and Controls *3*
Recovery System Monitoring and Controls *4*
Hydraulic Control *5*

OPERATIONAL MONITORING 5

Emergency Response/Contingency Plan Requirements Emergency Conditions 5

Emergency Response Actions 5

RECORDKEEPING AND REPORTING 6

Daily Operations Log 6

Quarterly Monitoring Report 6

List of Figures

Figure 1 Injection/Recovery System Overview

Figure 2 Injection/Recovery Well System Controls

List of Tables

Table 1 Production Test Facility Operations Plan (Monitoring and Response Requirements)

List of Appendices

Appendix A Estimated Composition of PTF ISCR Process Solutions

INTRODUCTION

This document provides a description of monitoring, control, and reporting requirements associated with the operation of the Florence Copper Project (FCP) in-situ copper recovery (ISCR) Production Test Facility (PTF). The methods and procedures described in this Operations Plan incorporate the detailed provisions contained in Attachments H, K, O, and P of the UIC Permit application that Florence Copper, Inc. (Florence Copper) submitted to the United States Environmental Protection Agency (USEPA) for operation of the PTF. The injection and recovery system will employ devices for metering flow and pressure, and for manually or automatically shutting down flow when alarm conditions occur. The metering devices will be monitored in a central control room and will provide sufficient information to allow the operator to maintain hydraulic control on a daily basis. Within the control room, the operator will have direct access to the necessary controls for shutting down the injection and extraction systems in response to unanticipated conditions.

Table 1, *Production Test Facility Operations Plan (Monitoring and Response Requirements)*, provides a summary of methods and procedures related to PTF operations. Table 1 identifies major components of the ISCR process; devices by which the components are to be monitored; the operating conditions to be monitored; possible causes of those conditions; immediate responses required if conditions exceed specified limits; and required follow-up actions. The monitoring devices will be electronically linked to the facility control room in order to provide a continuous assessment of conditions in the well field area, the pipeline corridor, and process area.

OPERATIONS

Pre-Operational Review

Before commencing PTF operations, operations personnel will conduct a pre-operational review of all equipment, monitoring devices, and procedures to ensure that the operations comply with the following permit conditions.

1. Mechanical integrity tests (Part I and Part II) have been conducted on all ISCR wells in the PTF well field, and all wells have passed the tests.
2. All wells have been completed such that they will not inject solutions within the uppermost 40 feet of the oxide zone (injection exclusion zone).
3. All core holes and non-Class III wells located within 500 feet of the PTF well field have been abandoned in accordance with the approved Plugging and Abandonment Plan.
4. Allowable injection pressure set not to exceed 0.65 pounds per square inch per foot (psi/ft) for each injection well.
5. Fresh groundwater has been injected, as needed, to assess the hydraulics of the injection and recovery patterns and to confirm that all monitoring devices and controls are in working order.

The operator will perform aquifer pump tests prior to injection in order to evaluate subsurface characteristics of the Bedrock Oxide Zone, overlying basin fill units, and the confining Middle Fine Grained Unit within the PTF Area of Review (AOR). Test results will be reported to the Arizona Department of Environmental Quality (ADEQ) in accordance with Aquifer Protection Permit (APP) requirements and to USEPA in accordance with UIC Permit conditions. Results of the aquifer tests will be compared to parameters used in the groundwater flow model, and the model parameters will be revised accordingly if the parameters are significantly different from those used in the model.

Injection System and Monitoring Devices

The injection system consists of individual injection wells, pumps, manifolds, piping, flow meters, and related controls. Manifolds will be used to distribute lixiviant to injection wells and to collect pregnant leach solution (PLS) from recovery wells.

Injection Pressures

The proposed Class III injection wells may be operated in one of two modes: pressurized at the well head or under atmospheric well head pressures.

To ensure that injection pressures do not induce additional fracturing of the oxide zone, UIC Permit No. AZ396000001 established a fracture gradient limit of 0.65 psi/ft. Maximum injection pressures are determined by multiplying the fracture gradient limit (0.65 psi/ft) by the depth from the top of well casing to the top of the injection interval. This method of calculating maximum injection pressures reflects the pressure generated by the weight of the column of raffinate and an additional pressure applied by mechanical means to achieve the maximum allowable injection pressure at depth. Florence Copper proposes to apply the same pressure limit cited in UIC Permit No. AZ396000001.

Injection Monitoring and Controls

Mechanical controls and monitoring devices incorporated into the injection system include:

- a pressure transducer at each injection well head;
- a flow meter at each injection manifold for measuring flow rates (gallons per minute [gpm]);
- a totalizing flow meter for measuring cumulative flow (gallons) into each injection manifold;
- an isolation valve at each injection well;
- a flow meter at each injection well for measuring flow rates (gpm);
- a valve at each injection well for controlling flow;
- a pressure transducer to measure annular pressure above the packer; and
- a pressure transducer to measure pressure in the injection zone.

A schematic depicting well field controls is included as Figure 1, and well controls as Figure 2.

Operators will use the injection well head pressure transducers to monitor injection pressures for loss of mechanical integrity, and ensure that the maximum allowable injection pressures are not exceeded at the wellheads. Allowable injection pressure will be calculated for each injection well. Actual pressures measured at each well head will be compared to the maximum allowable pressure(s) for the well, and will be adjusted as necessary to ensure injection pressures are within calculated allowable limits.

Inflatable packers may be used in injection wells to isolate each or both of the lower two screened well intervals. In the event that the operator intends to inject into all three of the screened intervals simultaneously, no packer will be used. Consequently, there will be open well screen above the packer wherever a packer is used in an injection well.

Operators will also use gauges and meters at each injection manifold as devices for monitoring injection pressures and flows on a manifold-by-manifold basis.

Every 24 hours, the totalized flows from all of the injection manifolds will be summed and compared to the summed totalized flows from all of the manifolds from recovery wells. If the summed total flow out of the well field exceeds the total flow into the well field, and if head elevations observed in the observation wells are greater than head elevations observed at the paired recovery wells, hydraulic control is confirmed. If the

summed total flow out of the well field does not exceed the total flow into the well field, or if head elevations observed at the observation wells are not greater than the head elevations observed at the paired recovery wells, adjustments to recovery and/or injection flow rates will be made accordingly to restore hydraulic control.

Planned PTF injection and recovery rates will be approximately 240 and 300 gpm, respectively. Operational and well performance considerations may require that these pumping and extraction rates vary slightly over time. Although the planned injection and recovery rates provide for 25 percent greater extraction than recovery, it is anticipated that hydraulic control can be maintained with a smaller amount of excess extraction. During PTF operations, injection will not be allowed to exceed 240 gpm, and extraction will not be allowed to fall below 110 percent of the injection rate on a daily average basis unless prior approval of a lower percentage is obtained from USEPA. Irrespective of operational injection and recovery rates, hydraulic control has only been confirmed when more solution is extracted than is injected and an inward groundwater gradient has been demonstrated between each observation well and inner recovery well pair.

Reduced flow in an injection well may be due to changes in formation characteristics or clogging of the formation or the well screens. A sudden increase in flow may indicate a break/failure of the well casing. If a casing breach is believed to have occurred, the operator will shut down that well by closing the well head isolation valve and will conduct relevant inspections. Inspections and related reporting will be conducted in accordance with Plans for Well Failures (Attachment O).

The injection and recovery systems will be connected to one or more tank farms near the PTF. The tank farms will include tanks fitted with a high-level alarm and level indicators. Both alarm and level indicator signals will be routed to the control room. An alarm will actuate if either a line fails or the tank high level is exceeded. The feed pump to the tank will be disabled automatically. Spilled solutions will be captured in a lined collection sump able to contain 110 percent of the volume of the tank and line. The spilled volume will be pumped back into the circuit for reuse.

Solutions pumped through pipelines located in pipeline channels between the PTF and the process area will be metered for flow and pressure. An electronic monitoring system will alarm if a pump fails, flow is interrupted, or flow is not in logical mode when a pump is activated. Loss of pressure or pressure exceeding a high setting will cause the pump to automatically shut down. In the event of such an occurrence, the plant operator will inspect the system. A broken line will be repaired within 48 hours and spilled solutions captured in spill control sumps in the lined channels will be pumped back into the process systems or to the water impoundment.

Recovery System Monitoring and Controls

The recovery system is similar to the injection system. It is comprised of individual recovery wells, pumps, recovery manifolds, piping, and related meters and controls, and includes:

- a continuous reading flow meter (gpm) at each recovery manifold;
- a totalizing flow meter (gallons) at each recovery manifold;
- an isolation valve at each recovery well;
- a flow meter at each recovery well; and
- a pressure transducer within perimeter and selected recovery wells for measuring head/water elevation within an IRZ (to assess hydraulic control).

The flow meters on the recovery manifolds will allow the operators to monitor recovery flow rates and use the data to compare against injection flow rates as described above. As necessary, recovery flow can be adjusted in the manifolds to ensure that flow out of the operational unit exceeds the flow of lixiviant and any other process solution into the operational unit. Inspections and related reporting will be conducted in accordance with Plans for Well Failures (Attachment O.)

Hydraulic Control

Hydraulic control must be maintained from the time that lixiviant injection begins until the groundwater quality in the injection zone has been restored to a quality that meets closure criteria in the APP and the UIC Permit.

Hydraulic control is defined as a condition involving an inward groundwater gradient. It is maintained by pumping more solution from the injection zone than is injected, and is used to prevent in-situ solutions from migrating beyond the injection zone.

In-line flow meters will be used to monitor and verify that the volume of PLS pumped from recovery wells exceeds the amount of lixiviant injected to confirm hydraulic control. In addition, the presence of an inward hydraulic gradient will be monitored on a daily basis by comparing water levels in paired wells along the perimeter of the injection zone. Paired wells along the perimeter of the injection zone include an inner recovery well and an outer observation well. Hydraulic control is confirmed when the water level in the outer observation well is higher than the water level in the inner recovery well of each well pair.

Hydraulic control has been confirmed when more solution is extracted than is injected and an inward groundwater gradient has been demonstrated between each observation well-inner recovery well pair.

OPERATIONAL MONITORING

Table 1 (attached) summarizes operational monitoring methods and procedures that will be used during PTF operations. Table 1 is designed to provide for the identification and correction of any problem related to the storage or flow of injected solutions before the solutions reach surface soils, the vadose zone, or groundwater outside the injection zone. The monitoring methods and procedures are also designed to monitor and maintain hydraulic control and thereby prevent injected solutions from migrating beyond the PTF well field. Table 1 is not intended to cover the sampling and analysis of groundwater or process solutions because of the complexity of the required equipment and procedures. However, references are provided in Section 1 for all related sampling and analysis requirements.

Emergency Response/Contingency Plan Requirements Emergency Conditions

The following conditions will cause activation of the contingency plan.

1. Spills of sulfuric acid, raffinate, or PLS outside containment structures that are in excess of the reportable quantities set forth in 40 CFR 302 et seq.
2. Loss of hydraulic control within an operational unit for more than 48 consecutive hours. For purpose of this requirement, loss of hydraulic control means that the amount of fluids injected during a 48-hour period exceeds the amount of fluid recovered during the same 48-hour period, and/or that the average head reading for any observation pair for a 48-hour period indicates a flat or outward gradient.
3. Failure of transducers in any observation pair for more than 48 hours.

Emergency Response Actions

The occurrence of any of the conditions described above will result in:

1. The activation of the notification procedures set forth in the APP.
2. Immediate containment of the spilled material, return of collected liquids to the process or to the evaporation ponds, disposal of contaminated soils in the water impoundment(s), and disposal of other debris in approved off-site facilities.

3. Immediate cessation of injection until such time that hydraulic control has been established and recovery wells have operated a sufficiently long period of time to compensate for the amount of fluid that was injected in excess of the amount recovered during the 48-hour period.

RECORDKEEPING AND REPORTING

Operational reporting will be conducted at two levels: daily and quarterly. Florence Copper operators will complete a daily operations log that includes each of the daily monitoring requirements and calculations described above, and other entries related to the injection and recovery process. These logs will be maintained on site and be available for inspection for a period of two years. Quarterly monitoring reports will be submitted to ADEQ and USEPA, and will include summaries of pertinent data from the daily operations log, as well as water quality sampling results for the point-of-compliance (POC), operational monitoring, and supplemental monitoring wells. Copies of the quarterly reports will be maintained on site until commencement of the post-closure period.

Daily Operations Log

The daily operations log will include the following:

- Daily cumulative flow rates for each of the injection and recovery manifolds.
- Daily cumulative total flow rates for the all of in the injection and recovery manifolds combined.
- Daily average water level readings for each perimeter/recovery well pair.
- List of injection and recovery wells shut down in response to alarm conditions, and actions taken to correct the alarm conditions noted. This information will include well identification, shut down time, and estimate of excess injection flow occurring prior to shut down.

Quarterly Monitoring Report

Quarterly monitoring reports will be submitted to ADEQ and USEPA within 45 days following the end of each calendar quarter. The quarterly reports will include:

- A table showing POC monitoring well, operational monitoring well, and supplemental monitoring well analytical results and alert levels with a narrative summary of those results. Supplemental monitoring wells include M55-UBF, M56-LBF, M57-O, M58-O, M59-O, M60-O, and M61-O.
- Results of monthly analysis of organics in raffinate.
- A table and graphs showing daily average head in the paired perimeter and observation wells.
- A table and graph showing daily cumulative injection and recovery flow in each active production unit over the reporting period.
- Results of monitoring required by 40 CFR 146.33(b)(i) whenever the injection fluid is modified to the extent that previously reported analyses are incorrect and incomplete.
- Results of mechanical integrity testing completed during the reporting period.
- A map showing current operational unit status.
- A list of wells and core holes abandoned during the reporting period, and a list of wells and core holes to be abandoned during the next reporting period.

Forecast compositions of injected and recovered solutions are provided in Appendix A. The forecast solution compositions listed in Appendix A were derived using a geochemical model and best available data describing formation conditions and solution geochemistry. This information is included with this Operations Plan to provide an example of what typical injected and recovered solution composition may be. As noted in Attachment H, Section H.6.4 of this Application, no solution stacking is proposed during PTF operations. Actual solution compositions may vary from those listed in Appendix A.

G:\PROJECTS\CURIS RESOURCES\38706-CURIS FEASIBILITY\DRAWINGS\2014 UIC APP\38706-300-0000-INJ_RCVRY_SYS_CNTRL.DWG

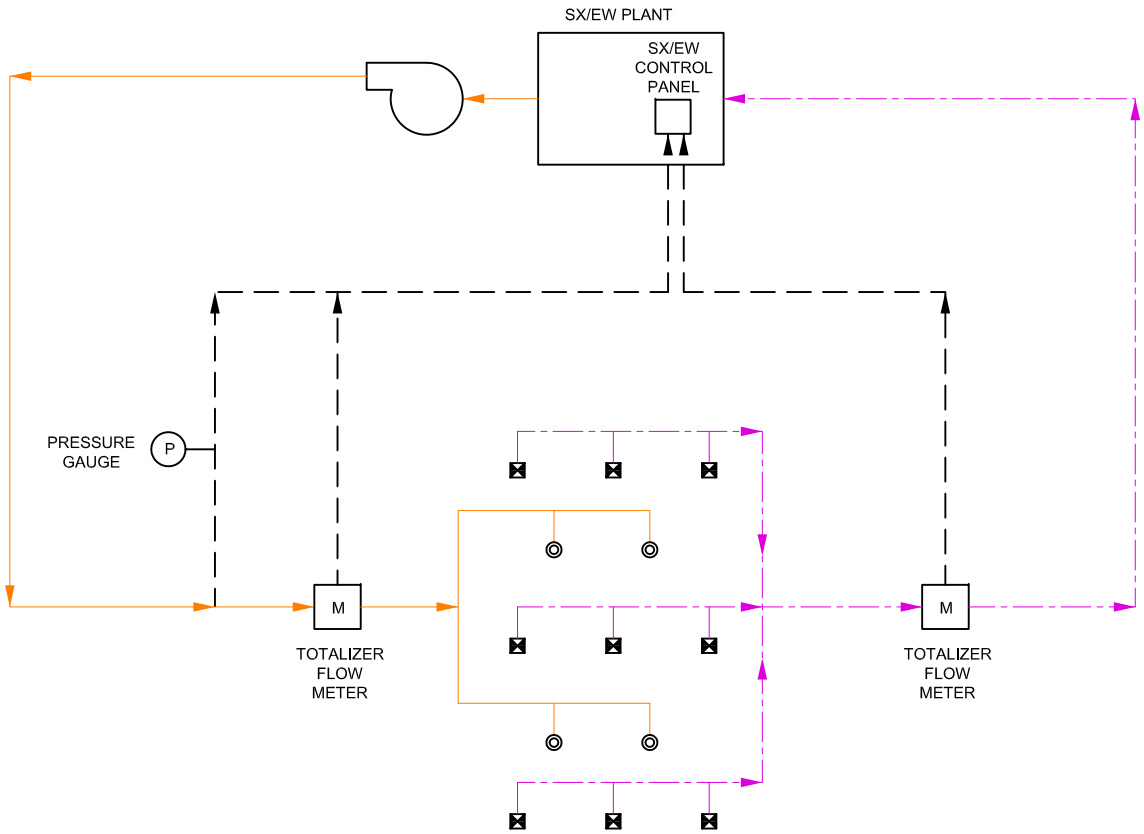

LEGEND:

- ☒ RECOVERY WELL
- ◎ INJECTION WELL

HALEY & ALDRICH

FLORENCE COPPER, INC.
FLORENCE, ARIZONA

INJECTION/REOVERY SYSTEM OVERVIEW

FLORENCE COPPER INC.

SCALE: NOT TO SCALE
MAY 2014

FIGURE 1

G:\PROJECTS\CURIS RESOURCES\38706-CURIS FEASIBILITY\DRAWINGS\JULY 2014 UIC APP\38706-300-B000-INJ_RCVRY_SYS_CNTRL.DWG

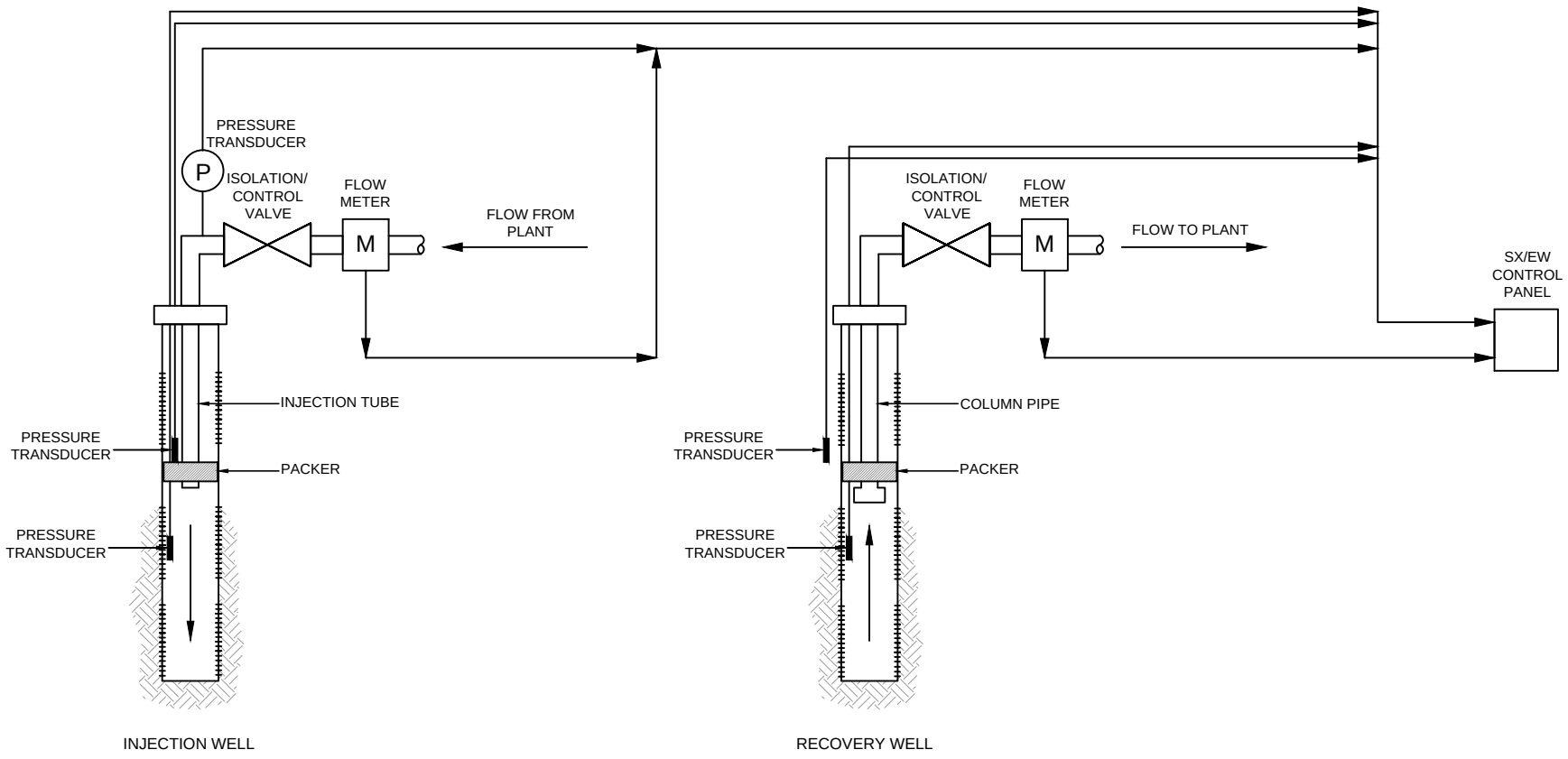

*NOTE: TYPICAL SCREEN AND PACKER PLACEMENT SHOWN

HALEY & ALDRICH

FLORENCE COPPER, INC.
FLORENCE, ARIZONA

INJECTION/REOVERY WELL
SYSTEM CONTROLS

FLORENCE COPPER INC.

SCALE: NOT TO SCALE
MAY 2014

FIGURE 2

Table 1. ISCR Phase 1 Facility (PTF) Operations Plan (Monitoring and Response Requirements)

		Component	Monitoring Device	Condition	Possible Cause*	Response	Follow-up Action
System Monitoring and Control Devices	Injection System	Injection Manifold and Pipeline	Pressure Gage or Transducer with upper and lower set points	Pressure exceeds upper setting	Improper pump setting, clogged screens, reduced formation permeability, obstructed well or equipment.	Alarm in control room, stop flow at injection manifold	Restart injection at lower flow rates.
				Pressure below lower setting	Line break, casing or screen breach.	Alarm in control room, stop flow at injection manifold	Repair system before restarting flow to injection manifold.
			Flow Meter	Flow rate too high	Improper pump setting, line break, injection well short circuit.	Alarm in control room, stop or reduce flow at injection manifold	Inspect/repair injection system, increase flow rates in adjoining recovery monifolds as necessary.
				Flow rate too low	Improper pump setting, clogged screens, reduced formation permeability, obstructed well or equipment.	Alarm in control room, reduce flow rates in adjoining recovery manifolds	Inspect/repair system, adjust injection flow rate as necessary.
			Totalizing Flow Meter	Daily total flow: Total in > total out	Loss of hydraulic control.	Reduce injection flow rate or increase recovery flow rate	Follow Part II.H.1 of UIC Permit and related reporting and record-keeping requirements.
		Injection Well Head	Flow Meter	No flow	Power loss, line break, instrument failure.	Reduce recovery rate in adjacent wells	Repair system, adjust flow rates as necessary.
				Flow rate too high	Improper pump setting, injection well short circuit, damaged well casing or equipment.	Reduce injection flow rate as necessary	Inspect/repair injection system.
				Flow rate too low	Improper pump setting, reduced formation permeability, obstructed well or equipment.	Reduce flow rates in adjoining recovery manifolds	Inspect/repair system, adjust injection flow rate as necessary.
			Transducer	Pressure exceeds upper limit	Improper pump setting, clogged screens, reduced formation permeability, obstructed well or equipment.	Alarm in control room, stop flow at injection manifold	Restart injection at lower flow rates.
				Pressure below lower limit	Line break, casing or screen breach.	Alarm in control room, stop flow at injection manifold	Repair system before restarting flow to injection manifold.
		Injection Well Annular Space	Transducer	Fluid level too high	Loss of packer pressure, injection tubing failure, formation bypass to upper screened zone	Inspect packer pressure, pressure test packer lines, inspect injection tubing, inspect fluid level conditions at other injection wells	Repair or replace packer or inflation equipment if necessary, replace damaged injection tubing, monitor fluid level conditons
	Recovery System	Recovery Manifold and Pipeline	Flow Meter	Flow rate too high	Improper pump setting.	Reduce recovery manifold flow rates as necessary	Inspect/repair system, reduce recovery flow rate as necessary.
				Flow rate too low	Improper pump setting, reduced formation permeability, obstructed well or equipment.	Increase pump rate	Inspect/repair system, reduce injection flow rate in adjacent manifolds as necessary.
			Totalizing Flow Meter	Daily total flow: Total in > total out	Loss of hydraulic control.	Reduce injection flow rate or increase recovery flow rate as necessary	Follow Part II.H.1 of UIC Permitand related reporting and record-keeping requirements.
		Recovery Well Head	Flow Meter Pressure Transducer (in selected wells only)	No flow	Power loss, intrument failure.	Alarm in control room, stop injection in adjoining injection wells	Repair system before restarting injection.
				Fluid level too high	Improper pump setting, short circuit in adjacent injection wells.	Alarm in control room, adjust pump setting, inspect well, reduce injection in adjoining wells as necessary	Inspect/repair recovery well and adjacent injection wells as necessary.
				Fluid level too low	Improper pump setting, clogged screen, reduced formation permeability.	Alarm in control room, automatic shut-off of pump	Evaluate formation, restart well at lower flow rate if necessary.
	ISCR Area Tanks	Raffinate/Lixiviant Tanks	Level Indicators	Fluid level too high	If in production mode, insufficient flow to injection wells or insufficient raffinate bleed to water impoundment. If in recirculation mode, too much flow from PLS tanks.	Alarm in control room, automatic shut-off of pumps at raffinate tanks	Inspect/repair injection system, adjust pump settings at raffinate tank.
				Fluid level too low	If in production mode, flow too high to injection manifolds or too much raffinate bleed to water impoundment. If in recirculation mode, insufficient flow from PLS tanks.	Alarm in control room, automatic shut-off of injection pumps	Inspect/repair injection/raffinate system, adjust pumps at raffinate tank.

Table 1. ISCR Phase 1 Facility (PTF) Operations Plan (Monitoring and Response Requirements)

		Component	Monitoring Device	Condition	Possible Cause*	Response	Follow-up Action
System Monitoring and Control Devices (continued)	ISCR Area Tanks (continued)	PLS Tanks	Level Indicators	Fluid level too high	Recovery rate too high, or flow to SX/EW too low if in production mode, or flow to raffinate tank too low if in recirulation mode.	Alarm in control room, automatic shut-off of recovery and injection wells	Inspect/repair injection system, adjust pumps to PLS pond and injection manifolds.
				Fluid level too low	Recovery rate too low or flow to SX/EW too high if in production mode, or flow to raffinate tank too high if in recirculation mode.	Alarm in control room, automatic shut-off of injection wells	Inspect/repair injection/recovery system; inspect/repair lines to raffinate tanks.
	Beneficiation Area Tanks	Raffinate/Lixiviant Tanks	Level Indicators	Fluid level too high	If in production mode, insufficient flow to injection wells or insufficient raffinate bleed to water impoundment. If in recirculation mode, too much flow from PLS tanks	Alarm in control room, automatic shut-off of pumps at raffinate tanks	Inspect/repair injection system, adjust pump settings at raffinate tank.
				Fluid level too low	If in production mode, flow too high to injection manifolds or too much raffinate bleed to water impoundment. If in recirculation mode, insufficient flow from PLS tanks.	Alarm in control room, automatic shut-off of injection pumps	Inspect/repair injection/raffinate system, adjust pumps at raffinate tank.
		PLS Tanks	Level Indicators	Fluid level too high	Recovery rate too high, or flow to SX/EW too low if in production mode, or flow to raffinate tank too low if in recirulation mode.	Alarm in control room, automatic shut-off of recovery and injection wells	Inspect/repair injection system, adjust pumps to PLS pond and injection manifolds.
				Fluid level too low	Recovery rate too low or flow to SX/EW too high if in production mode, or flow to raffinate tank too high if in recirculation mode.	Alarm in control room, automatic shut-off of injection wells	Inspect/repair injection/recovery system; inspect/repair lines to raffinate tanks.
	Pipeline Corridor	Sumps	Liquid Detectors	Liquid present	Precipitation or leak.	Alarm in control room. If not raining, arm immediate shut-off of associated pumps.	Assess liquid; return liquid to plant or water impoundment; evaluate and repair pipeline if needed.
	Runoff Pond	Sump	Liquid Level Indicator	Liquid accumulating in sump	Precipitation, leak, spill, wash down.	Alarm in control room; determine nature of liquid. Pump to PLS, raffinate tanks, or neutralizing unit/water impoundment depending on volume and source of liquid.	Inspect sump to confirm that accumulating liquids are being being removed.
	Water Impoundment	Leak Collection and Removal System (LCRS)	Conductivity probe	Presence of liquid in sump above pump-down level	Leak in upper (primary) liner.	Measure and record volume of liquid removed from LCRS sump, determine if ALR or RLL is exceeded.	If ALR or RLL is exceeded, follow APP contingency plan and related reporting and record-keeping requirements.
External Monitoring		Paired Recovery/Observation Wells	Pressure Transducer	Average daily head in recovery well > average daily head in observation well	Loss of hydraulic control.	Increase recovery flow rate or decrease injection flow rate as necessary	Follow Part II.H.1 of UIC Permit and related reporting and record-keeping requirements.

*Faulty monitoring devices will be evaluated as a possible cause of each listed condition.

APPENDIX A

Estimated Composition of PTF ISCR Process Solutions

Table 3.1. Estimated Composition of Pilot Test Facility Process Solutions

Analyte	Arizona Water Quality Standard (mg/L)	Forecasted Concentration (mg/L [a])							
		Composition of 98% H_2SO_4	PLS	Raffinate	Pregnant Electrolyte (SX Solution)	Water Impoundment Solution with 9 g/L Lime Treatment	Water Impoundment After Evaporation (mg/kg)	Groundwater After Block Rinsing	Makeup Water [b]
Metals									
Aluminum	None	—	1,642	1,639	110	1,569	63,380	0.30	<2.0
Antimony	0.006	0.05–0.15	—	—	0.10	—	—	<0.2	<0.2
Arsenic	0.05	0.1–0.4	1.32	1.32	0.06	1.33	53.58	<0.0005	<0.0005
Barium	2	—	0.55	0.55	< 0.2	0.55	22.14	<0.05	<0.05
Beryllium	0.004	—	0.09	0.09	—	0.09	3.59	<0.002	<0.002
Cadmium	0.005	—	0.24	0.24	25.0	0.24	9.74	<0.002	<0.002
Calcium	None	—	449	448	90	4,180	168,740	11.8	61
Chromium	0.1	—	0.74	0.73	15	0.74	29.8	<0.03	<0.03
Cobalt	None	—	1.1	1.09	15	1.1	44.27	<0.1	<0.1
Copper	None	0.2–0.5	2,080	208	51,000	208	8,410	1.44	0.044
Iron	None	7–14	1,314	1,310	1,650	1	26.41	<0.001	0.34
Lead	0.05	0.1–0.7	0.44	0.44	< 1.0	0.44	17.7	<0.04	<0.04
Magnesium	None	—	1,204	1,202	160	1,198	48,430	24.40	14
Manganese	None	0.05–0.15	15.3	15.3	0.014	15.3	620	0.05	<0.02
Mercury	0.002	—	—	—	< 0.01	—	—	<0.001	<0.001
Nickel	0.1	0.07–0.2	2.3	2.3	35	2.3	93	<0.05	<0.05
Potassium	None	—	372	372	< 0.01	344	13,900	55.0	6.2

[a] Unless otherwise noted
[b] Makeup water results from well PW2-1 sampled March 12, 2014 (Turner Laboratories [Tucson] work order 14C0493)
[c] Turner Laboratories result

mg/L = Milligrams per liter
H_2SO_4 = Sulfuric acid
PLS = Pregnant leach solution
g/L = Grams per liter
mg/kg = Milligrams per kilogram
— = Not estimated

Table 3.1. Estimated Composition of Pilot Test Facility Process Solutions

Analyte	Arizona Water Quality Standard (mg/L)	Forecasted Concentration (mg/L [a])							
		Composition of 98% H_2SO_4	PLS	Raffinate	Pregnant Electrolyte (SX Solution)	Water Impoundment Solution with 9 g/L Lime Treatment	Water Impoundment After Evaporation (mg/kg)	Groundwater After Block Rinsing	Makeup Water [b]
Metals (cont.)									
Selenium	0.05	—	0.44	0.4	< 0.1	0.4	18	<0.04	<0.04
Silver	None	—	0.11	0.11	< 0.01	0.11	1.09	<0.1	<0.1
Sodium	None	—	164.2	163.9	110	164.4	6,640	1,203	120
Thallium	0.002	—	0.55	0.6	0.1	0.6	22	<0.05	<0.05
Zinc	None	0.05–0.75	7.6	7.5	0.06	7.6	305	—	0.095
Anions									
Bicarbonate	None	—	—	<1	<1	1.86	75	3,180	160
Chloride	None	<1	296	295	25	296	11,950	159	160
Fluoride	4	—	230	230	<1	230	9,300	1	<0.5
Nitrate	None	<5	24	24	—	24	974	1.9	1.9
Phosphate	None	—	—	—	<0.5	—	—	<0.5	<0.5
Sulfate	None	954,000	24,226	23,055	214,000	16,780	678,280	507	76
Field Parameters									
TDS	None	—	32,410	29,350	267,483	25,146	—	5,150	550 [c]
pH	None	—	1.57	1.4	0.01	6.2	—	7.0	7.2
Radiochemicals									
Uranium	None	—	4.1	4.1	—	4.1	163	—	0.013

[a] Unless otherwise noted
[b] Makeup water results from well PW2-1 sampled March 12, 2014 (Turner Laboratories [Tucson] work order 14C0493)
[c] Turner Laboratories result

mg/L = Milligrams per liter
H_2SO_4 = Sulfuric acid
PLS = Pregnant leach solution
g/L = Grams per liter
mg/kg = Milligrams per kilogram
— = Not estimated