FLORENCE COPPER, INC.

UIC PERMIT APPLICATION

FLORENCE COPPER PROJECT – PRODUCTION TEST FACILITY

ATTACHMENT M – WELL CONSTRUCTION DETAILS

Table of Contents

Table of Contents 1

List of Figures 1

List of Exhibits 1

M.1 Introduction 2

M.2 Well Design 2
- M.2.1 Well Casing 2
- M.2.2 Casing Centralizers 2
- M.2.3 Screened Interval 3
- M.2.4 Annular Seal 3
- M.2.5 Annular Conductivity Device 3
- M.2.6 Fluid Pressure Transducers 3

List of Figures

Drawing M-1 Typical Injection/Recovery Well Construction Diagram

Drawing M-2 Injection/Recovery Well Head Detail

Drawing M-3 Typical Observation Well Construction Diagram

Drawing M-4 Typical Multi-Level Sampling Well Construction Diagram

Drawing M-5 Typical Supplemental Monitoring Well and Operational Monitoring Well Construction Diagram

Drawing M-6 Annular Conductivity Device Detail 1

Drawing M-7 Annular Conductivity Device Detail 2

Drawing M-8 Conductivity Sensor Device Detail 1

Drawing M-9 Conductivity Sensor Device Detail 2

List of Exhibits

Exhibit M-1 Revised Figures Previously Provided with Comment Responses
- Revised Figure 11-2, Supplemental Monitoring Well M61-LBF Design
- Revised Figure 12-1, Supplemental Monitoring Well M57-O Design
- Revised Figure 12-2, Supplemental Monitoring Well M58-O Design
- Revised Figure 12-3, Supplemental Monitoring Well M59-O Design
- Revised Figure 12-4, Supplemental Monitoring Well M60-O Design
- Revised Figure 18-2, POC Well Design Well M55-UBF
- Revised Figure 18-3, POC Well Design Well M56-LBF
- Figure M1-1, Operational Monitoring Well MW-01

Exhibit M-2 Selected Materials from Temporary APP Application Attachment 9, Exhibit 9A

M.1 Introduction

This Attachment M has been prepared in support of an application (Application) by Florence Copper, Inc. (Florence Copper) to the United States Environmental Protection Agency (USEPA) for issuance of an Underground Injection Control Class III (Area) Permit (UIC Permit) for the planned Production Test Facility (PTF), to be located at the Florence Copper Project (FCP) in Pinal County, Arizona. This Attachment provides details of the Class III injection well design including schematic drawings showing construction details of injection and recovery wells. In the following discussion, the Class III injection wells are referred to as injection and/or recovery wells. This Attachment does not include a description of downhole equipment that will be used during PTF operations. Downhole equipment may include submersible pumps, injection pipes, orifice plate assemblies, packer assemblies, fluid level instruments, and well cleaning tools.

M.2 Well Design

Well design details are shown on Drawings M-1 through M-5. Drawing M-1 shows details of a typical injection/recovery well. Drawing M-2 shows construction details of a typical injection/recovery well head. Drawing M-3 shows construction details of a typical observation well. Drawing M-4 shows construction details for a typical multi-level sampling well, and Drawing M-5 shows construction details for a typical supplemental monitoring well and operational monitoring well. Drawings M-6 and M-7 show details of the annular conductivity device (ACD) that will be installed on all observation wells and multi-level sampling wells constructed with polyvinyl chloride (PVC) or fiberglass reinforced plastic (FRP) well casing. Conductivity sensors (CS) (Drawings M-8 and M-9) will be attached to the screen of recovery wells, observation wells, and multi-level sampling wells to facilitate electrical resistivity profiling of the injection zone during injection and recovery.

Exhibit M-1 includes figures depicting the proposed construction details for supplemental monitoring wells M55-UBF, M56-LBF, M57-O, M58-O, M59-O, M60-O, M61-O, and operational monitoring well MW-01. Exhibit M-2 includes design documents submitted to the Arizona Department of Environmental Quality (ADEQ) in support of the application for Temporary Aquifer Protection Permit (APP) No. 106360, which has now been superseded by the description and drawings submitted with this Attachment.

M.2.1 Well Casing

The surface casing will be low carbon steel manufactured in accordance with American Society for Testing and Materials (ASTM) Specification 153-89A (1989) Grade A (or better) steel. This casing will be of a diameter sufficient to allow a minimum 2½-inch annular space between the casing wall and borehole wall to ensure that an adequate seal can be installed.

The surface casing diameter will vary based on the diameter of the planned well casing to be installed. Because of the chemical environment in which the casing will be installed, FRP, PVC, or other corrosive-resistant threaded casing will be used to complete the injection, recovery, observation, and multi-level sampling wells. These casing materials will be of sufficient grade so that they will not fail in tension and will not collapse or burst, and will be chemically resistant to the planned process related solutions.

Well screen made of PVC or other suitable material may be used in the lower portion of each injection, recovery, observation, and multi-level sampling well as necessary to keep the hole open and to provide the operational flexibility to isolate segments of the full length of the injection and recovery zone.

M.2.2 Casing Centralizers

Casing centralizer will be installed on the well casing every 40 feet along the entire well casing, including screens where applicable. The centralizers will be made of stainless steel or PVC and will be suitable for contact with process related solutions.

M.2.3 Screened Interval

The screened interval will vary in length at each well and may include one or more screened segments within the full length of the injection and recovery zone. Formation characteristics may require that wells be completed without well screen and filter pack within the injection and recovery zone. If this proves to be necessary, all other aspects of the proposed design will remain in effect. No screened interval will be installed higher than 40 feet below the Lower Basin Fill Unit (LBFU)/oxide bedrock contact.

M.2.4 Annular Seal

The annular seal will be installed from 40 feet below the LBFU/oxide bedrock contact to the surface. The annular seal material will be cement and will be installed either by the tremie method or by the displacement method as described in Attachment L.

M.2.5 Annular Conductivity Device

The ACD will be installed on PVC or FRP well casing of observation wells and multi-level sampling wells in a location that will be as close as possible to the top of the Middle Fine-Grained Unit (MFGU), and no more than 20 feet above the MFGU. It will consist of a pair of metal bands spaced 3 feet apart, and connected to electrical wires which extend to the surface. The ACD will be constructed of materials suitable for contact with the annular seal materials and the forecast process related solutions. Details of the ACD are presented in Drawings M-3 and M-4.

A CS will be strapped to the well screens of recovery, observation, and multi-level sampling wells at regular intervals to facilitate electrical resistivity profiling of the formation during injection and recovery.

M.2.6 Fluid Pressure Transducers

Each of the injection, recovery, and observation wells will be fitted with transducers for fluid level measurement. Injection wells will include two transducers installed within the well casing, with one above and one below the inflatable packer in each injection well. Recovery wells will include one transducer installed within the well casing below the packer, and a second transducer installed outside the well casing, adjacent to the screen to measure fluid pressure in the formation adjacent to the well. Observation wells will include a single transducer installed within the well casing to measure fluid levels at the edge of the PTF wellfield. Transducer installation locations and cable configuration are shown on Figures M-1, M-2 and Figure 2 of Appendix K-2.

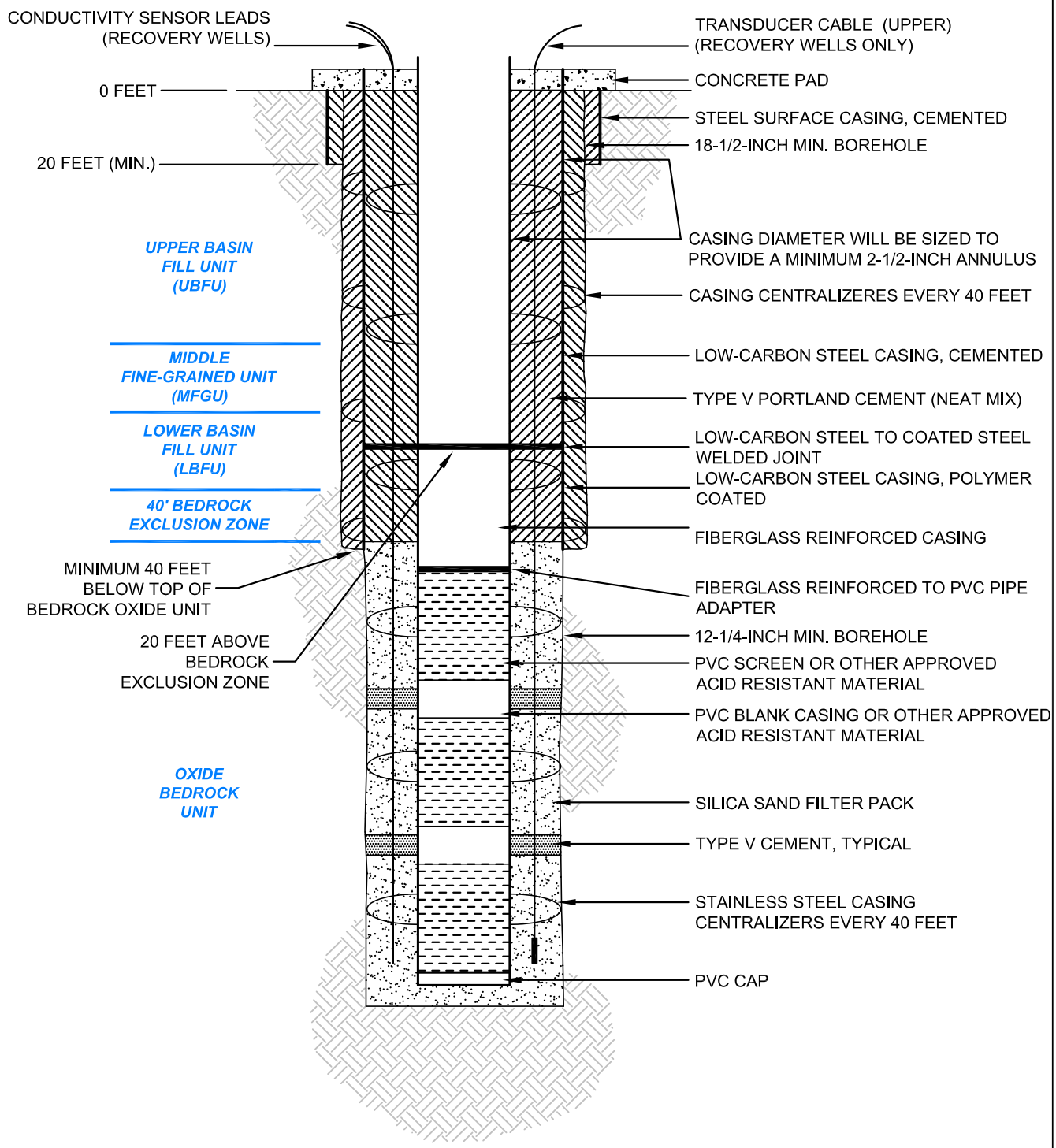

HALEY & ALDRICH

FLORENCE COPPER, INC.
FLORENCE, ARIZONA

TYPICAL INJECTION/RECOVERY WELL CONSTRUCTION DIAGRAM

FLORENCE COPPER INC.

SCALE: NOT TO SCALE
MAY 2014

DRAWING M-1

G:\PROJECTS\CURIS RESOURCES\38706-CURIS FEASIBILITY\DRAWINGS\2014 UIC APP\FIGURES MIM-1 WELL CONST DGRM.DWG

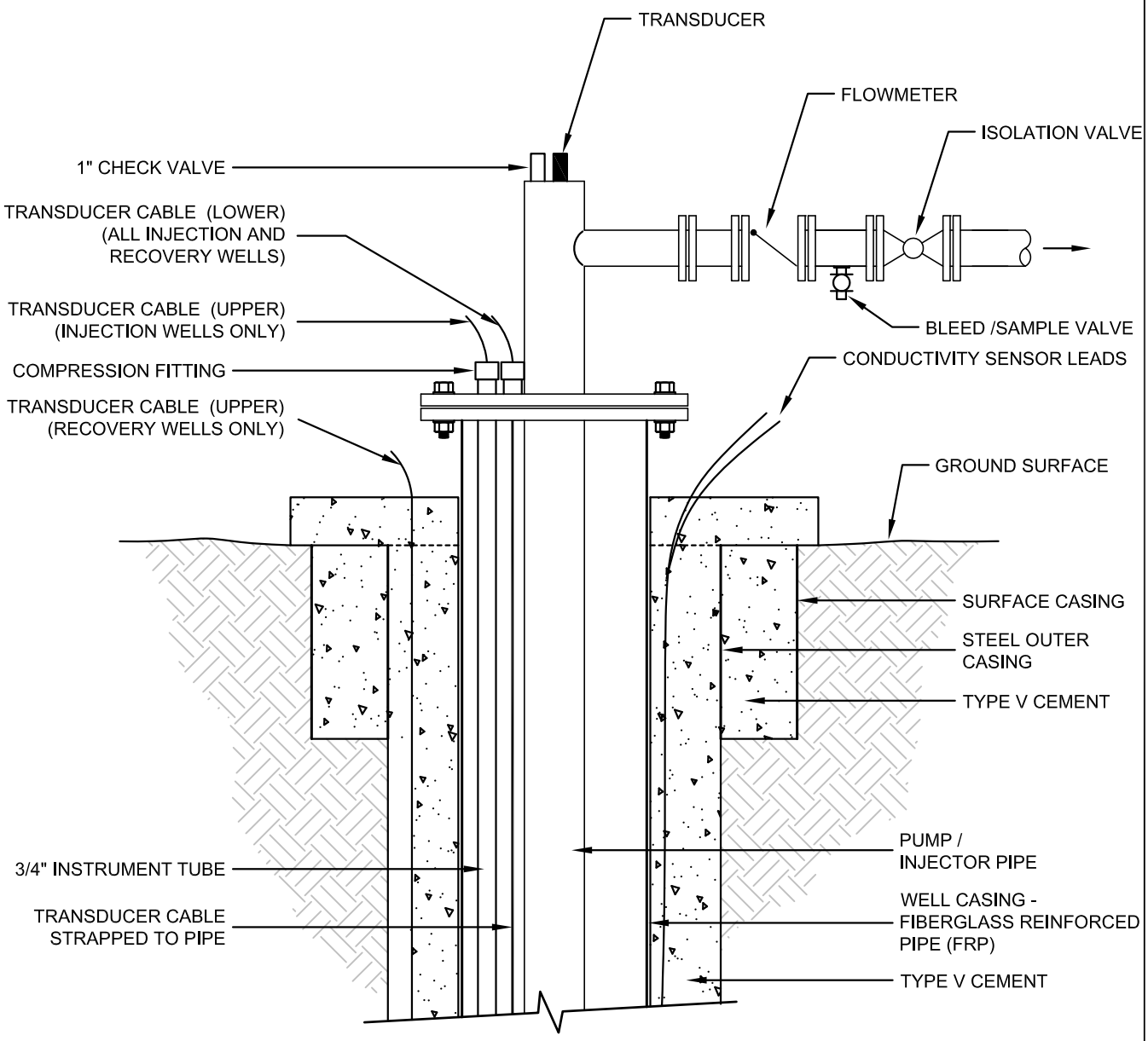

HALEY & ALDRICH

FLORENEC COPPER, INC.
FLORENCE, ARIZONA

INJECTION/RECOVERY
WELL HEAD DETAIL

FLORENCE COPPER INC.

SCALE: AS SHOWN
MAY 2014

DRAWING M-2

G:\PROJECTS\CURIS RESOURCES\38706-CURIS FEASIBILITY\DRAWINGS\2014 UIC APP\FIGURES MIM-2 WELLHEAD DETAIL.DWG

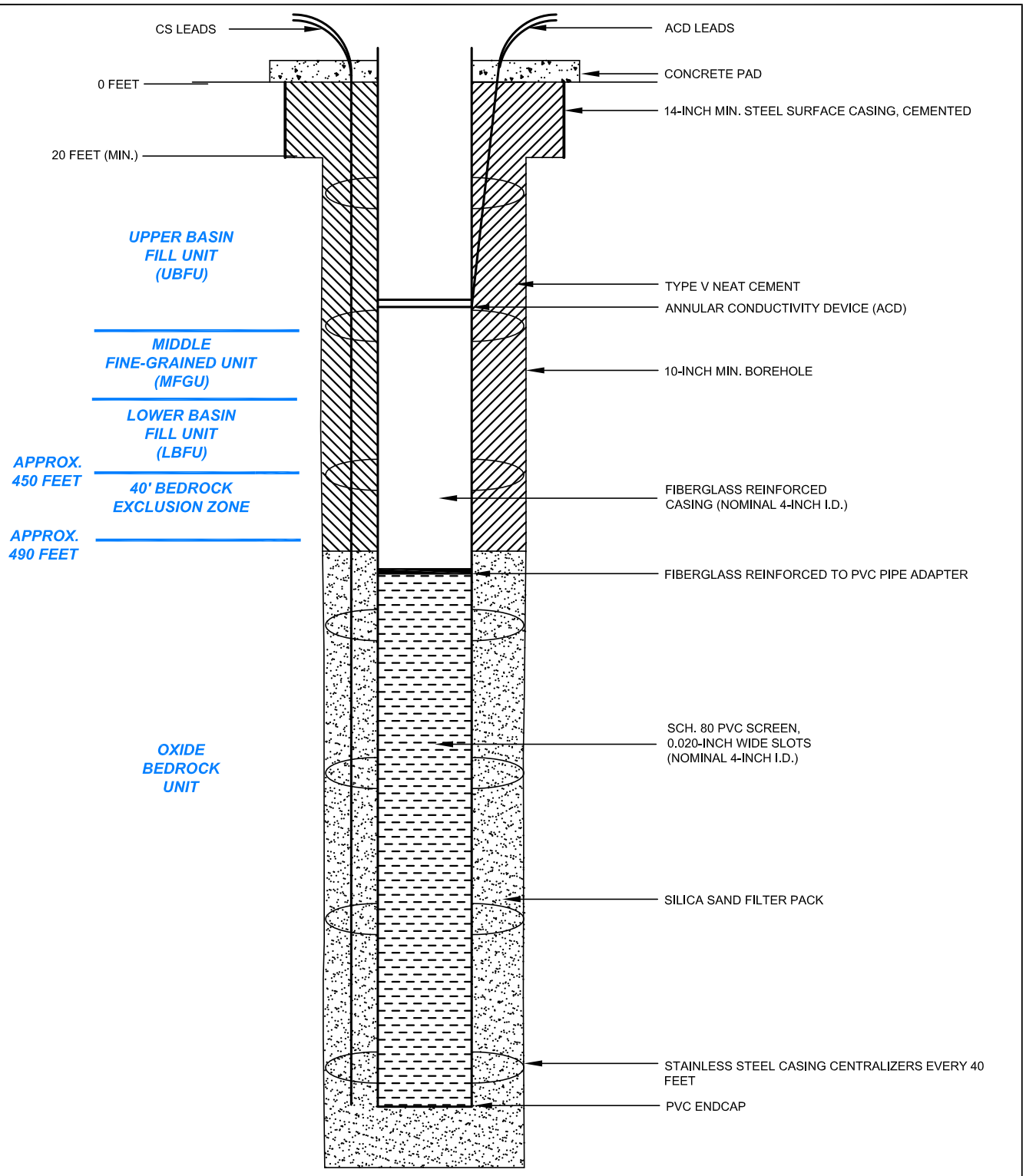

HALEY & ALDRICH

FLORENCE COPPER, INC.
FLORENCE, ARIZONA

TYPICAL OBSERVATION WELL CONSTRUCTION DIAGRAM

FLORENCE COPPER INC.

SCALE: NOT TO SCALE
MAY 2014

DRAWING M-3

G:\PROJECTS\CURIS RESOURCES\38706-CURIS FEASIBILITY\DRAWINGS\2014 UIC APP\FIGURES M\M-3.DWG

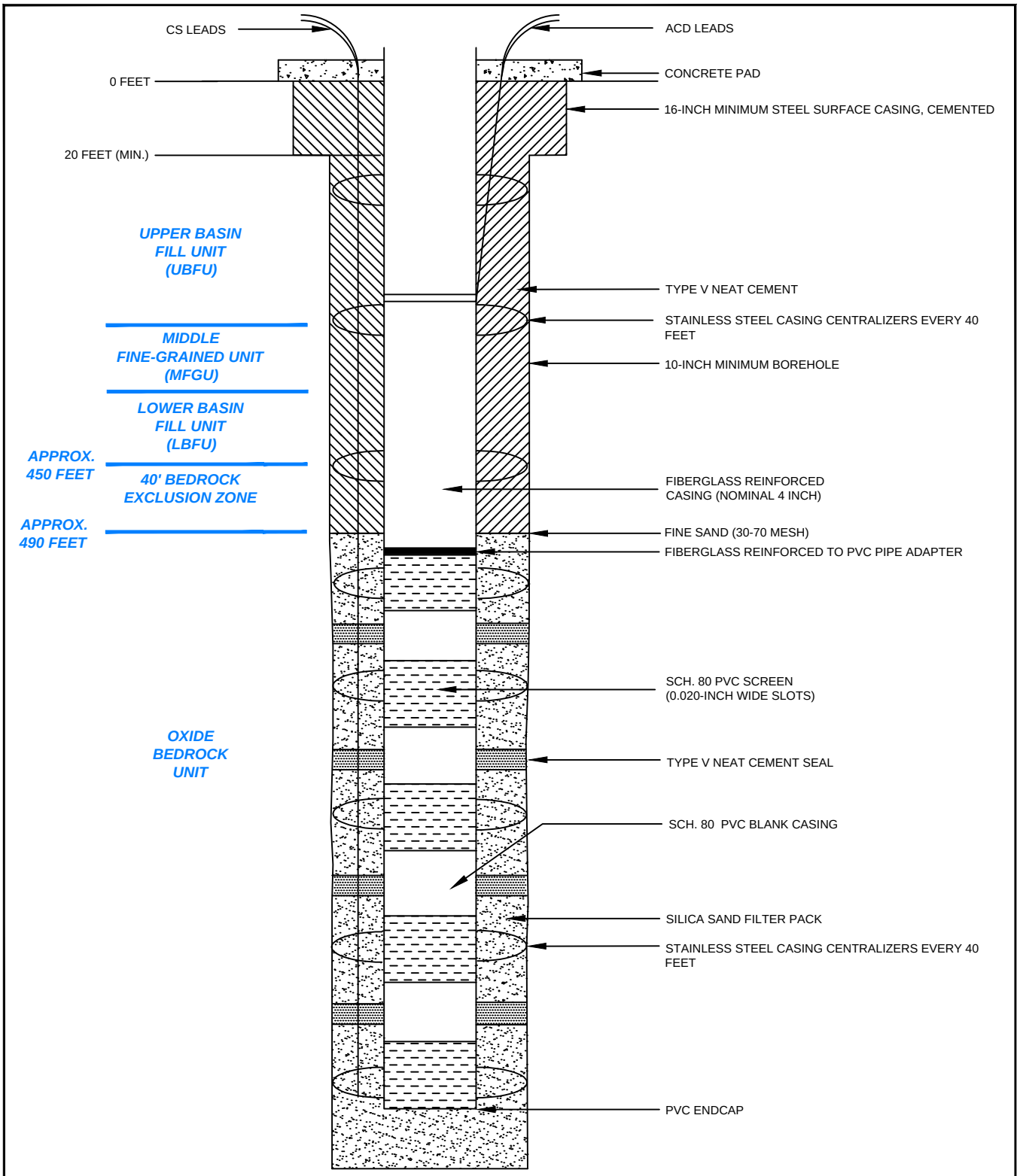

HALEY & ALDRICH

FLORENCE COPPER, INC.
FLORENCE, ARIZONA

TYPICAL MULTI-LEVEL SAMPLING WELL CONSTRUCTION DIAGRAM

FLORENCE COPPER INC.

SCALE: NOT TO SCALE
MAY 2014

DRAWING M-4

G:\PROJECTS\CURIS RESOURCES\38706-CURIS FEASIBILITY\DRAWINGS\2014 UIC APP\38706-300-000-MULTI-LEVEL_WELL_M-4.DWG

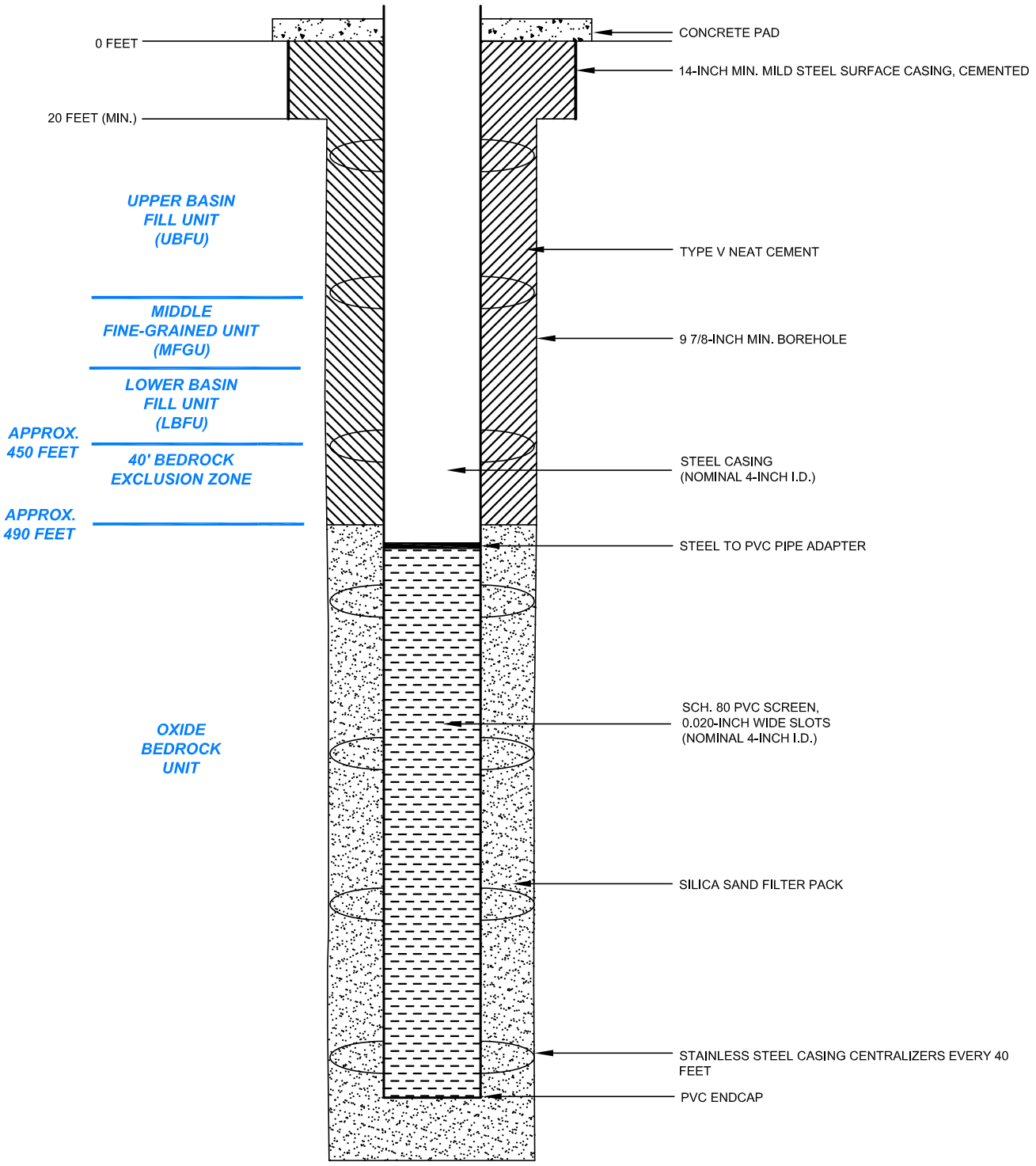

HALEY & ALDRICH

FLORENCE COPPER, INC.
FLORENCE, ARIZONA

TYPICAL SUPPLEMENTAL MONITORING WELL AND OPERATIONAL MONITORING WELL CONSTRUCTION DIAGRAM

FLORENCE COPPER INC.

SCALE: NOT TO SCALE
JULY 2014

DRAWING M-5

G:\PROJECTS\CURIS RESOURCES\38706-CURIS FEASIBILITY\DRAWINGS\2014 UIC APP\FIGURES MM-5.DWG

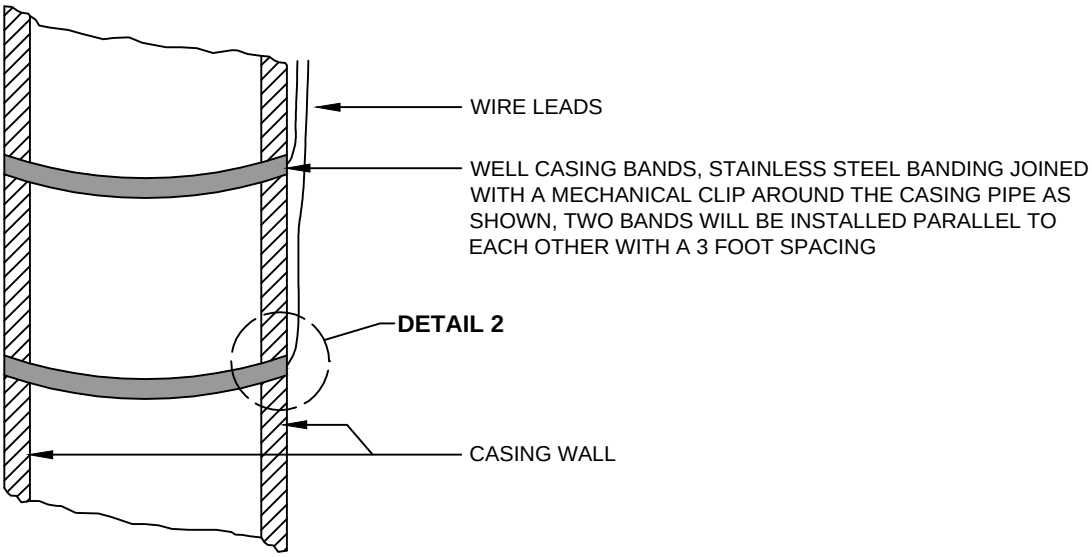

DRAWING M-6

ANNULAR CONDUCTIVITY DEVICE DETAIL 1

NOT TO SCALE

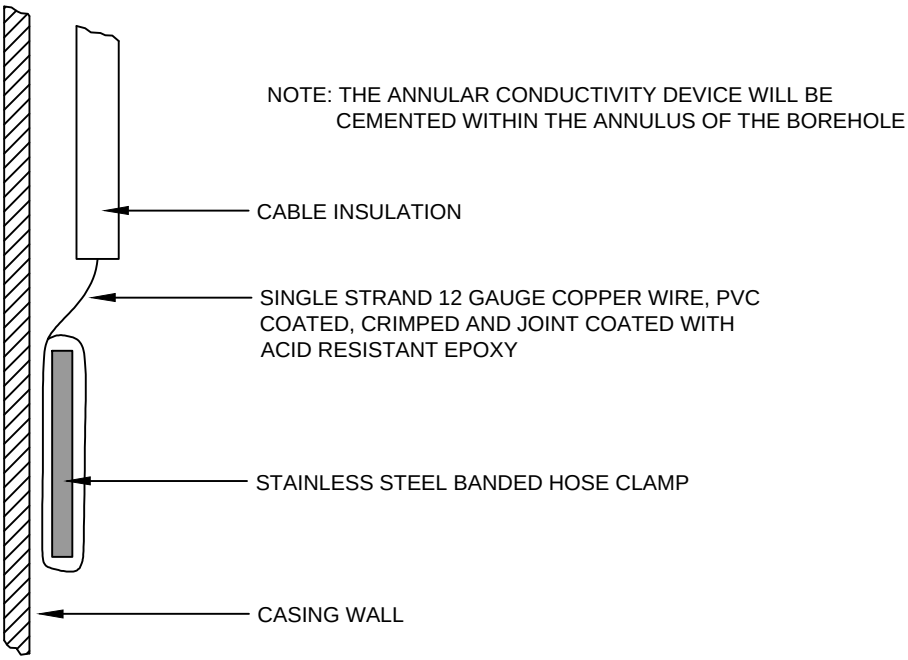

DRAWING M-7

ANNULAR CONDUCTIVITY DEVICE DETAIL 2

NOT TO SCALE

HALEY & ALDRICH

FLORENCE COPPER, INC.
FLORENCE, ARIZONA

ANNULAR CONDUCTIVITY DEVICE DETAILS

FLORENCE COPPER INC.

SCALE: NOT TO SCALE
MAY 2014

DRAWING M-6 & M-7

G:\PROJECTS\CURIS RESOURCES\38706-CURIS FEASIBILITY\DRAWINGS\2014 UIC APP\FIGURES M\M-6_ M-9.DWG

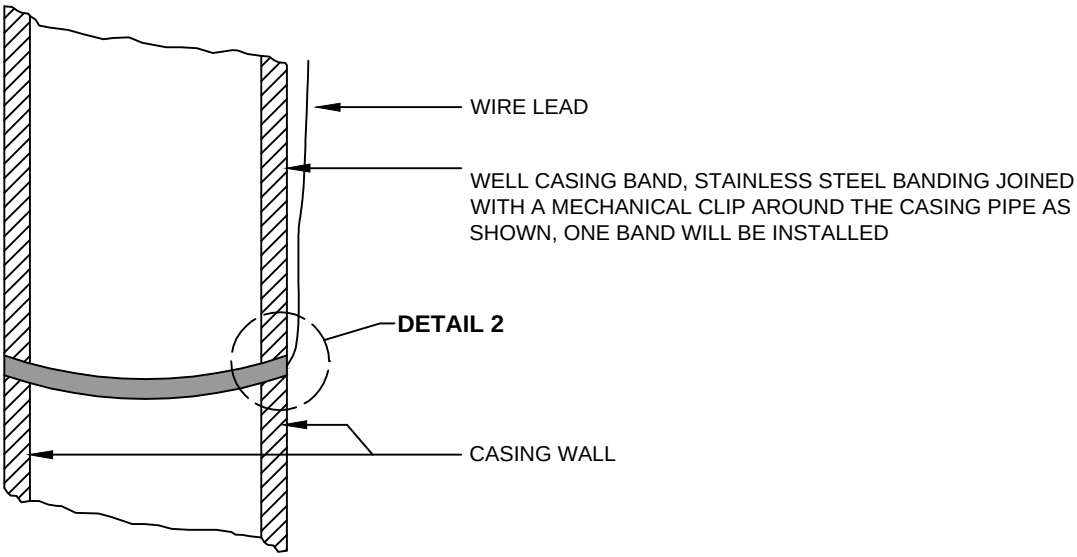

DRAWING M-8

CONDUCTIVITY SENSOR DEVICE DETAIL 1

NOT TO SCALE

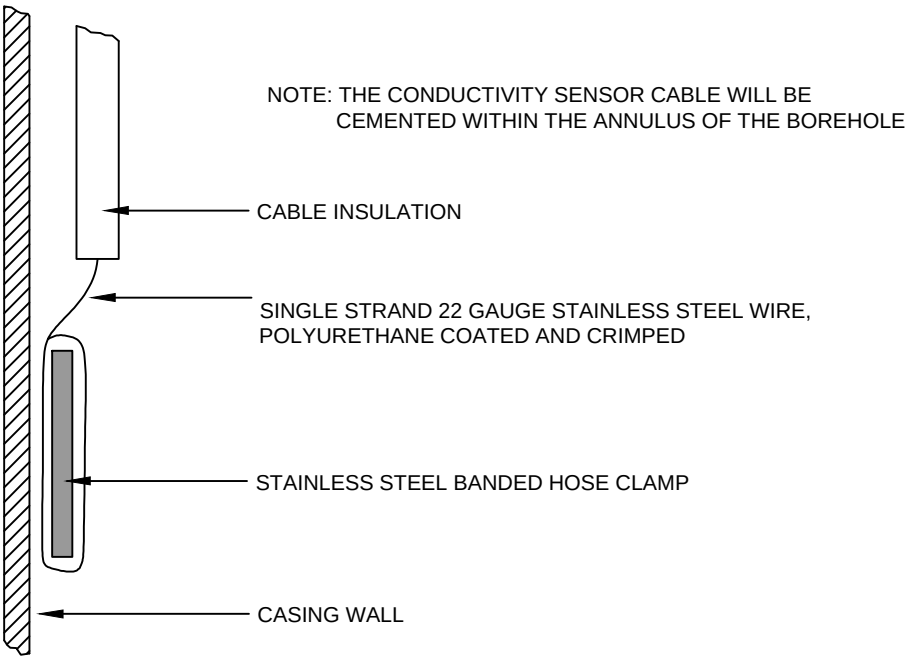

DRAWING M-9

CONDUCTIVITY SENSOR DEVICE DETAIL 2

NOT TO SCALE

HALEY & ALDRICH

FLORENCE COPPER, INC.
FLORENCE, ARIZONA

CONDUCTIVITY SENSOR DEVICE DETAILS

FLORENCE COPPER INC.

SCALE: NOT TO SCALE
MAY 2014

DRAWING M-8 & M-9

G:\PROJECTS\CURIS RESOURCES\38706-CURIS FEASIBILITY\DRAWINGS\2014 UIC APP\FIGURES M\M-6_ M-9.DWG

EXHIBIT M-1

Revised Figures Previously Provided with Comment Responses

- Revised Figure 11-2, Supplemental Monitoring Well M61-LBF Design
- Revised Figure 12-1, Supplemental Monitoring Well M57-O Design
- Revised Figure 12-2, Supplemental Monitoring Well M58-O Design
- Revised Figure 12-3, Supplemental Monitoring Well M59-O Design
- Revised Figure 12-4, Supplemental Monitoring Well M60-O Design
- Revised Figure 18-2, POC Well Design Well M55-UBF
- Revised Figure 18-3, POC Well Design Well M56-LBF
- Figure M1-1, Operational Monitoring Well MW-01 Design

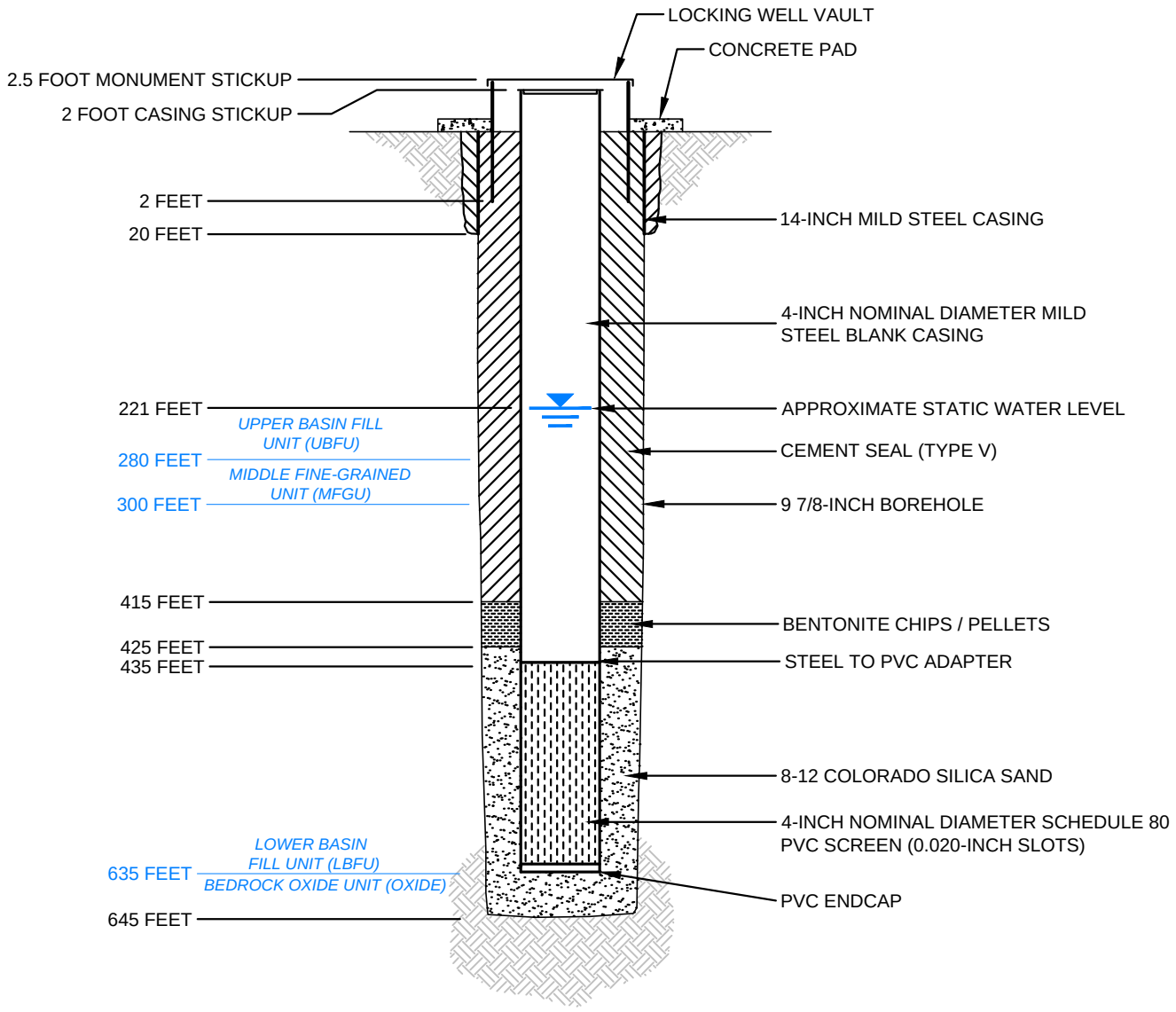

HALEY & ALDRICH

FLORENCE COPPER, INC.
FLORENCE, ARIZONA

SUPPLEMENTAL MONITORING
WELL M61-LBF DESIGN (REVISED)

FLORENCE COPPER INC.

SCALE: NOT TO SCALE
JULY 2014

FIGURE 11-2

G:\PROJECTS\CURIS RESOURCES\38706-CURIS FEASIBILITY\DRAWINGS\2014 UIC APP\WELL DESIGNS\M61WELLDESIGN.DWG

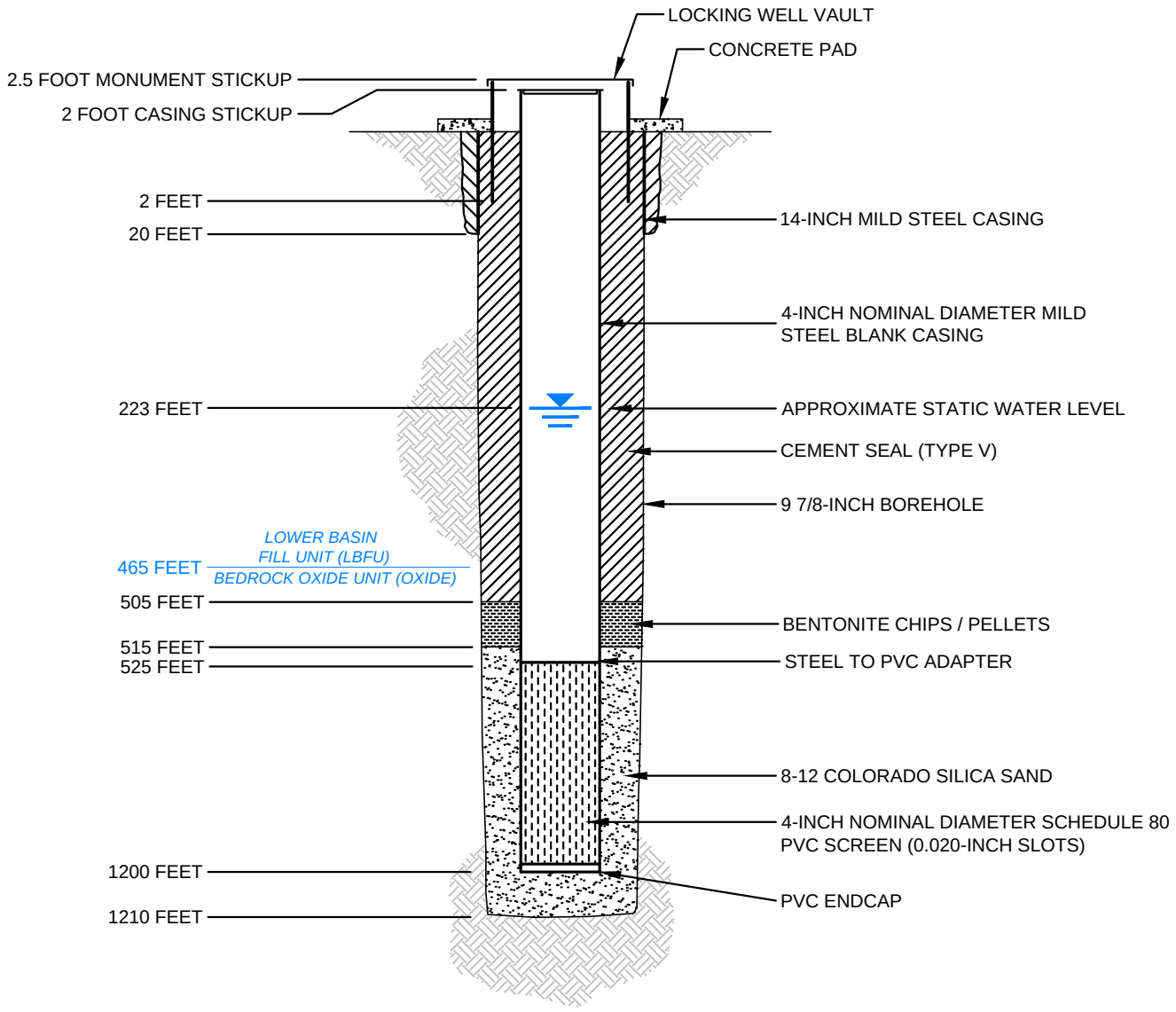

HALEY & ALDRICH

FLORENCE COPPER, INC.
FLORENCE, ARIZONA

SUPPLEMENTAL MONITORING
WELL M57-O DESIGN (REVISED)

FLORENCE COPPER INC.

SCALE: NOT TO SCALE
JULY 2014

FIGURE 12-1

G:\PROJECTS\CURIS RESOURCES\38706-CURIS FEASIBILITY\DRAWINGS\2014 UIC APP\WELL DESIGNS\M57WELLDESIGN.DWG

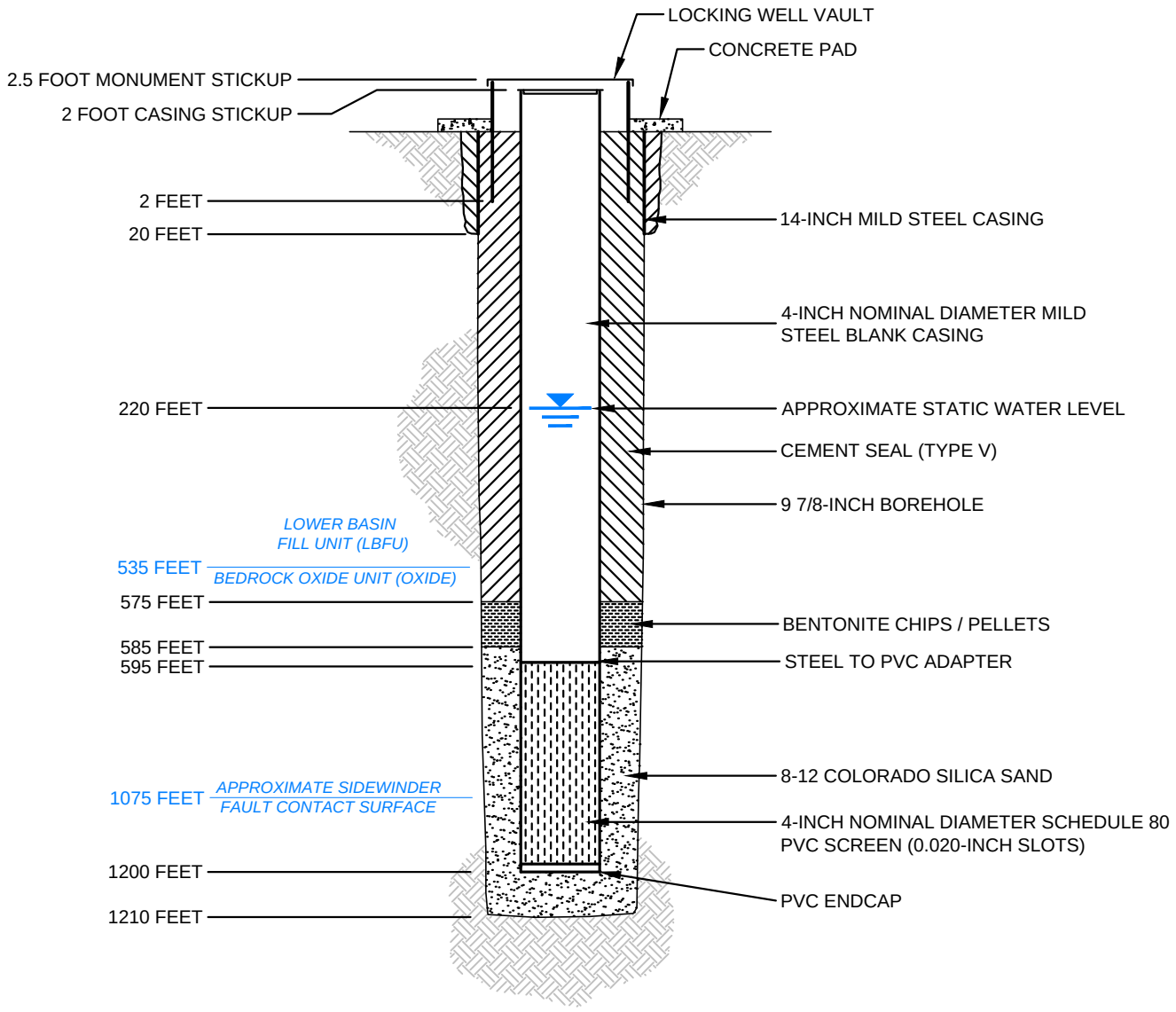

HALEY & ALDRICH

FLORENCE COPPER, INC.
FLORENCE, ARIZONA

SUPPLEMENTAL MONITORING
WELL M58-O DESIGN (REVISED)

FLORENCE COPPER INC.

SCALE: NOT TO SCALE
JULY 2014

FIGURE 12-2

G:\PROJECTS\CURIS RESOURCES\38706-CURIS FEASIBILITY\DRAWINGS\2014 UIC APP\WELL DESIGNS\M58WELLDESIGN.DWG

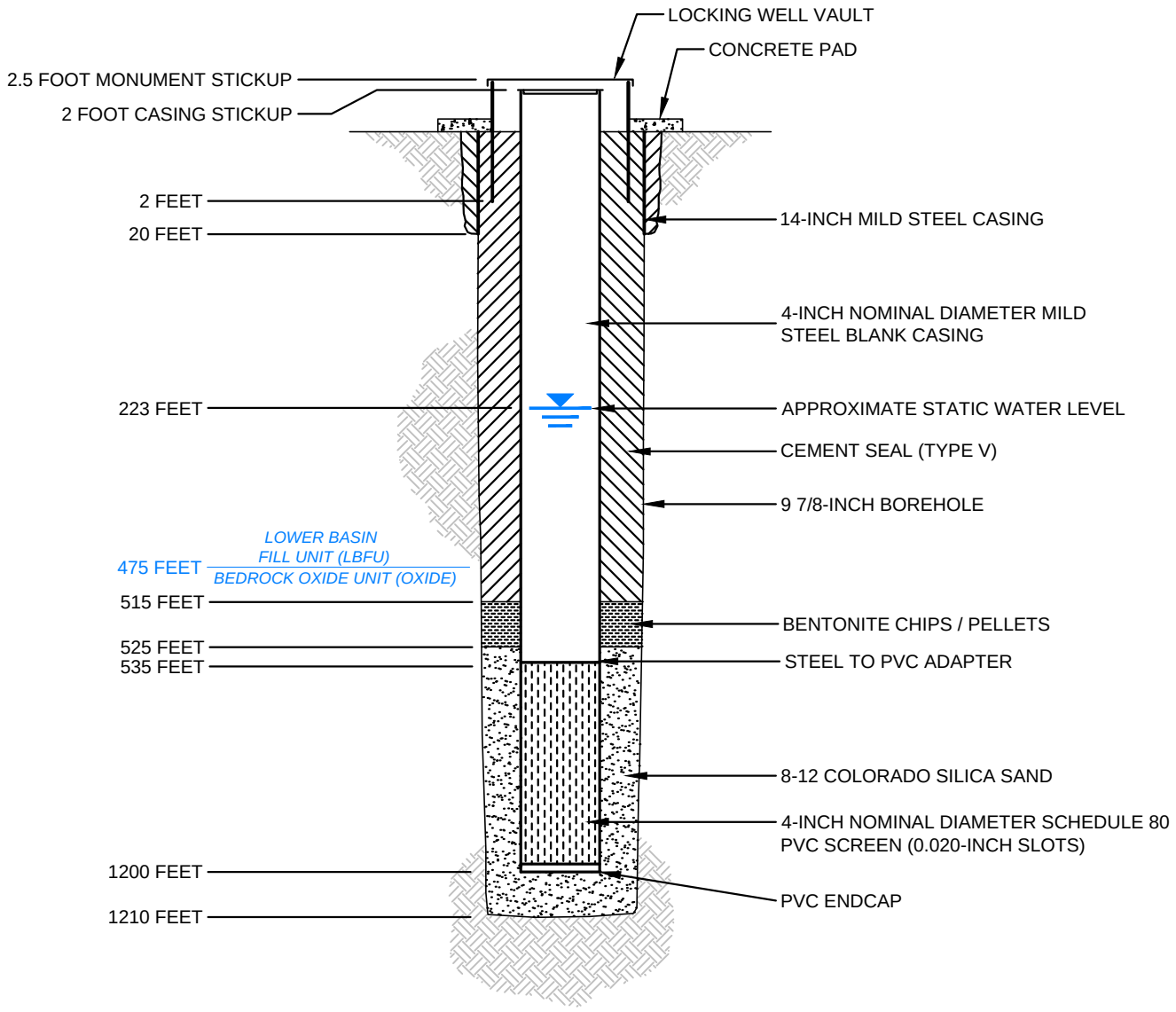

HALEY & ALDRICH

FLORENCE COPPER, INC.
FLORENCE, ARIZONA

SUPPLEMENTAL MONITORING
WELL M59-O DESIGN (REVISED)

FLORENCE COPPER INC.

SCALE: NOT TO SCALE
JULY 2014

FIGURE 12-3

G:\PROJECTS\CURIS RESOURCES\38706-CURIS FEASIBILITY\DRAWINGS\2014 UIC APP\WELL DESIGNS\M59WELLDESIGN.DWG

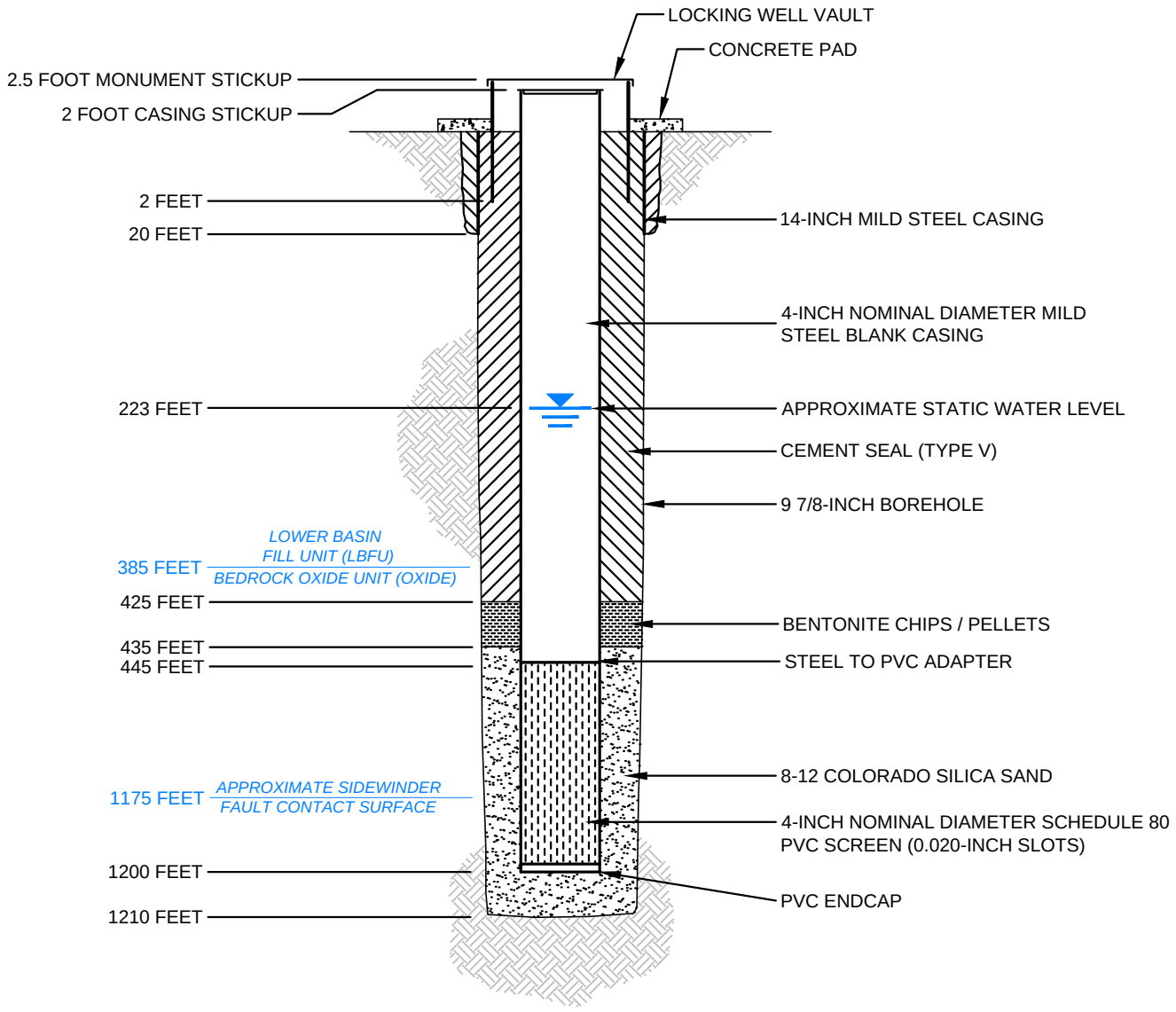

HALEY & ALDRICH

FLORENCE COPPER, INC.
FLORENCE, ARIZONA

SUPPLEMENTAL MONITORING
WELL M60-O DESIGN (REVISED)

FLORENCE COPPER INC.

SCALE: NOT TO SCALE
JULY 2014

FIGURE 12-4

G:\PROJECTS\CURIS RESOURCES\38706-CURIS FEASIBILITY\DRAWINGS\2014 UIC APP\WELL DESIGNS\M60WELLDESIGN.DWG

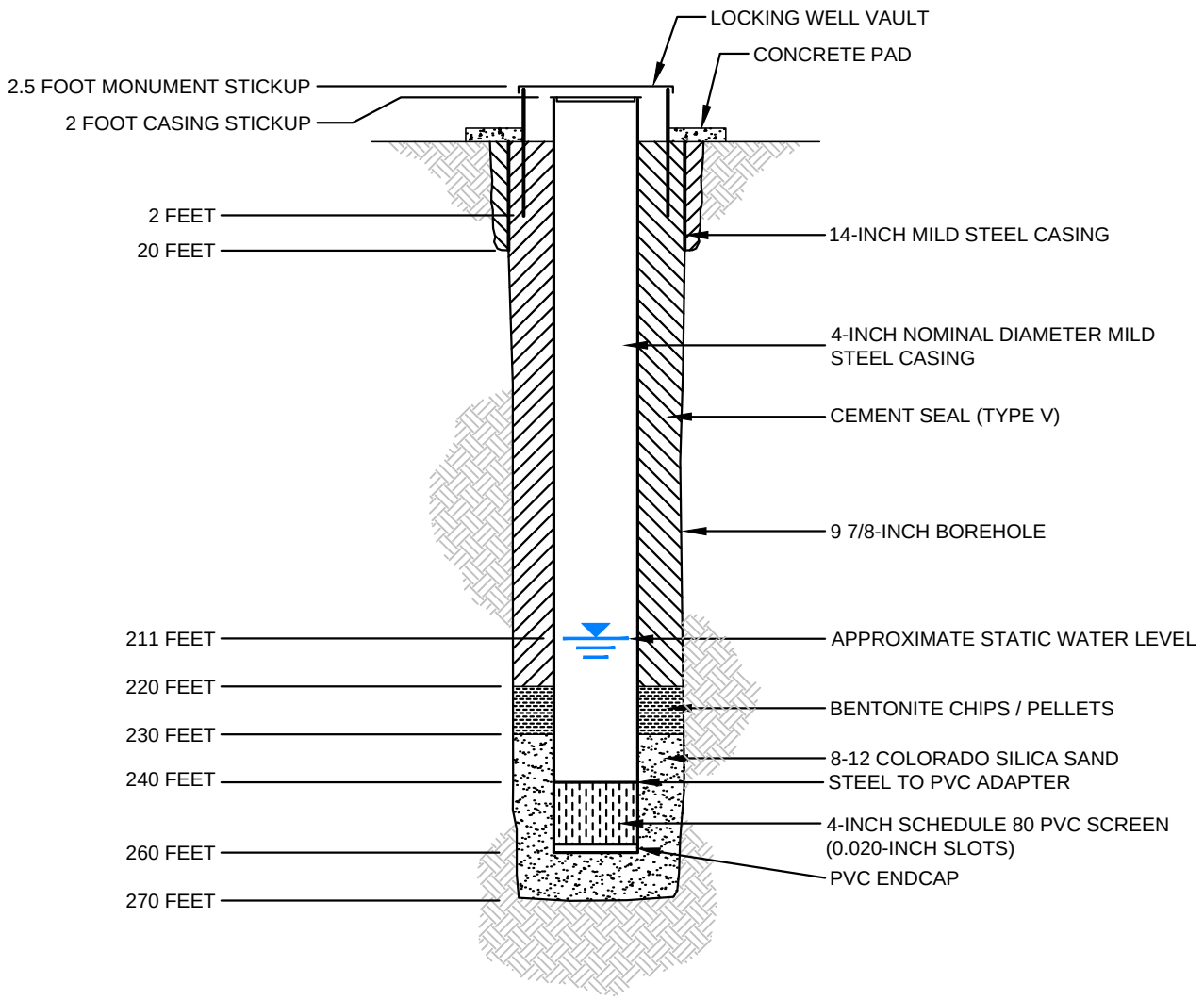

HALEY & ALDRICH

FLORENCE COPPER, INC.
FLORENCE, ARIZONA

SUPPLEMENTAL MONITORING
WELL M55-UBF DESIGN (REVISED)

FLORENCE COPPER INC.

SCALE: NOT TO SCALE
JULY 2014

FIGURE 18-2

G:\PROJECTS\CURIS RESOURCES\38706-CURIS FEASIBILITY\DRAWINGS\2014 UIC APP\WELL DESIGNS\M55_M56_WELLDESIGN.DWG

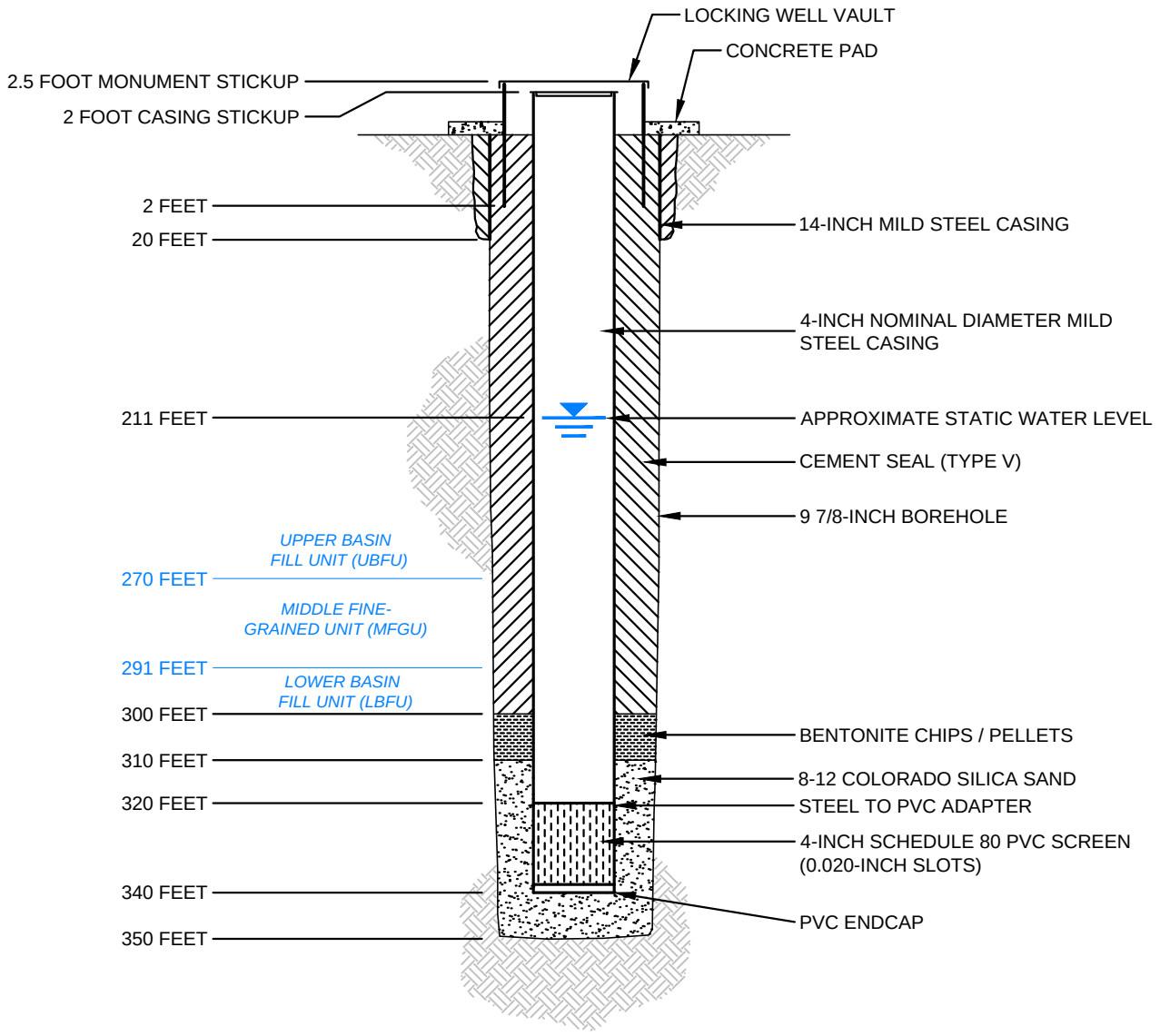

HALEY & ALDRICH

FLORENCE COPPER, INC.
FLORENCE, ARIZONA

SUPPLEMENTAL MONITORING
WELL M56-LBF DESIGN (REVISED)

FLORENCE COPPER INC.

SCALE: NOT TO SCALE
JULY 2014

FIGURE 18-3

G:\PROJECTS\CURIS RESOURCES\38706-CURIS FEASIBILITY\DRAWINGS\2014 UIC APP\WELL DESIGNS\M55_M56_WELLDESIGN.DWG

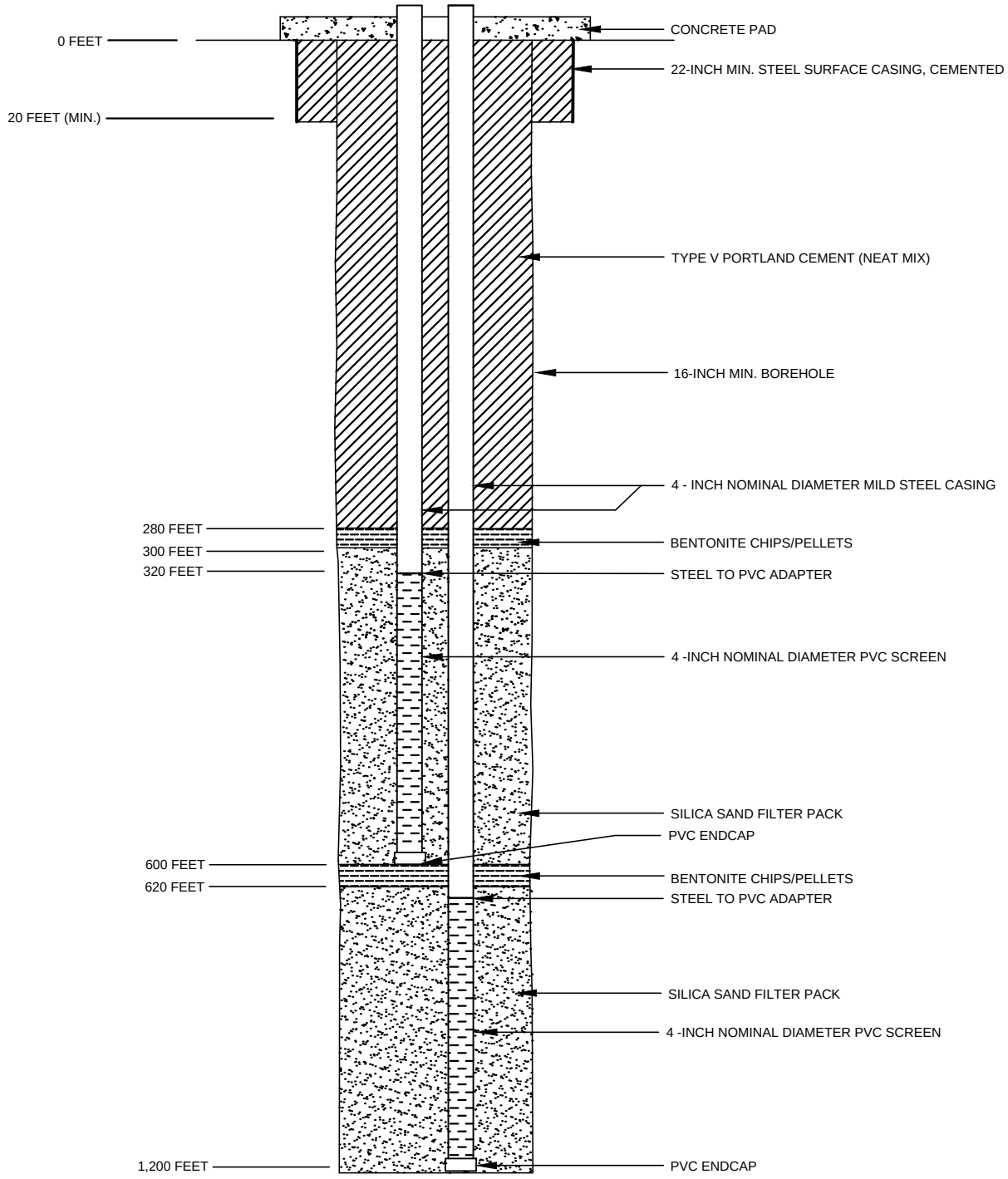

NOTE: LITHOLOGIC UNIT CONTACTS WILL BE DETERMINED ONCE THE FINAL WELL LOCATION HAS BEEN APPROVED BY ARIZONA DEPARTMENT OF ENVIRONMENTAL QUALITY

HALEY & ALDRICH

FLORENCE COPPER, INC.
FLORENCE, ARIZONA

OPERATIONAL MONITORING WELL
MW-01 PROPOSED DESIGN

FLORENCE COPPER INC.

SCALE: NOT TO SCALE
SEPTEMBER 2014

FIGURE M1-1

G:\PROJECTS\CURIS RESOURCES\38706-CURIS FEASIBILITY\DRAWINGS\JULY 2014 UIC APP\MW-01_WELLDIAGRAM.DWG

EXHIBIT M-2

Selected Materials from Temporary APP Application Attachment 9, Exhibit 9A

CURIS RESOURCES (ARIZONA) INC.

APPLICATION FOR TEMPORARY
INDIVIDUAL AQUIFER PROTECTION PERMIT

EXHIBIT 9A – DESIGN DOCUMENTS PERTAINING TO PTF WELL FIELD, INCLUDING INJECTION AND RECOVERY WELLS

Table of Contents

Table of Contents 1

List of Drawings 2

List of Tables 2

9A.1 PTF Well Field 3

9A.2 Hydrogeologic Setting 3

9A.2.1 Basin-Fill Deposits 3
9A.2.2 Oxide Bedrock Zone 3
9A.2.3 Sulfide Bedrock Zone 3

9A.3 Proposed PTF Wells 3

9A.3.1 Well Design 3
9A.3.1.1 Well Casing 3
9A.3.1.2 Casing Centralizers 4
9A.3.1.3 Screened Interval 4
9A.3.1.4 Annular Seal 4
9A.3.2 Well Construction 4
9A.3.2.1 Borehole Drilling 4
9A.3.2.2 Open-Hole Geophysics 4
9A.3.2.3 Well Casing 5
9A.3.2.4 Filter Pack and Intermediate Seal Installation 5
9A.3.2.5 Cementing 5
9A.3.2.6 Cased-Hole Geophysics 6
9A.3.3 Well Inspection and Monitoring 6
9A.3.3.1 Inspection 6
9A.3.3.2 Monitoring 7
9A.3.4 Well Heads, Manifolds and Controls 7
9A.3.4.1 Containment 7
9A.3.4.2 System Controls and Monitoring 7
9A.3.4.2.1 System Controls and Internal Monitoring 7
9A.3.4.2.2 Injection System 7
9A.3.4.2.3 Recovery System 8
9A.3.4.2.4 Tank Farm 9

9A.4 External Monitoring 9

9A.5 Well Abandonment Plan 9

List of Drawings

Drawing 9A-1 Typical Injection/Recovery Well Construction Diagram

Drawing 9A-2 Well Head Detail for Injection/Recovery Well

Drawing 9A-3 Typical Observation Well Construction Diagram

Drawing 9A-4 Typical Westbay Well Construction Diagram

List of Tables

Table 9A-1 Production Test Facility Operations Plan

9A.1 PTF Well Field

This document includes information regarding the design and operation of injection and recovery wells and related surface facilities that are proposed to be installed and operated as the Production Test Facility (PTF or site). The well field is located within a 160-acre portion of the area leased from the State of Arizona under Mineral Lease No. 11-26500. The proposed PTF well field and the Arizona State Land mineral lease boundaries are shown on Figure 8-1.

9A.2 Hydrogeologic Setting

9A.2.1 Basin-Fill Deposits

Attachment 14A provides detailed information regarding the hydrogeologic setting in which the PTF well field is located. As described in Attachment 14A, three distinct alluvial basin fill deposits underlie the PTF site: the Upper basin Fill Unit (UBFU); the Middle Fine Grained Unit (MFGU); and the Lower Basin Fill Unit (LBFU). Figures 14A-8 and 14A-9 in Attachment 14A show the basin fill units and the underlying bedrock in a generalized geologic cross section running from west to east and south to north, respectively, through the PTF site.

The approximate thicknesses of the basin fill units in the vicinity of the PTF site are 200 to 240 feet for the UBFU, 20 to 30 feet for the MFGU, and 70 to more than 750 feet for the LBFU. Hydraulic conductivities of 20 to 130 feet per day were reported for the UBFU, and approximately 70 feet per day for the LBFU. Laboratory tests indicated a much lower hydraulic conductivity for the MFGU (5.1×10^{-9} centimeters per second).

9A.2.2 Oxide Bedrock Zone

Based on the copper mineral assemblage in the bedrock, the bedrock is divided into an upper oxide zone and a lower sulfide zone. The approximate thickness of the oxide bedrock zone beneath the Curis Arizona property is 200 to more than 1,500 feet. Hydraulic conductivity ranges from 0.1 to 2.5 feet per day.

9A.2.3 Sulfide Bedrock Zone

The sulfide bedrock zone which underlies the oxide is significantly less permeable than the oxide bedrock zone (approximate hydraulic conductivity ranges from 0.0055 to 0.05 feet per day). The very low permeability sulfide zone is effectively impermeable to groundwater flow and constitutes hydrogeologic bedrock.

9A.3 Proposed PTF Wells

9A.3.1 Well Design

Well design details are shown on Drawings 9A-1 and 9A-2. Observation well and Westbay well designs are shown on Figures 9A-3 and 9A-4, respectively.

9A.3.1.1 <u>Well Casing</u>

The surface casing will be low carbon steel manufactured in accordance with American Society for Testing and Materials (ASTM) Specification 153-89A (1989) Grade A (or better) steel. The surface casing will extend from ground surface to a depth of 20 feet, and will be of a diameter sufficient to allow a minimum 2 ½-inch annulus between the casing and the formation.

An outer casing will be installed that extends from ground surface to a point approximately 20 feet above the top of the Bedrock Oxide Unit with ASTM Specification 153-89A Grade A or better steel. A 60-foot length of Schedule 80 polyvinyl chloride (PVC) will be attached to the lower end of the steel surface casing to extend

the outer casing a distance of 40 feet below the top of the Bedrock Oxide Unit. The injection and recovery wells will be constructed within this outer casing. The outer casing will be of a diameter sufficient to allow a minimum 2 ½-inch annulus between the outer casing and the surface casing and the formation.

The primary injection and recovery well casing will be installed inside of the outer casing. Because of the chemical environment in which the casing will be installed, fiberglass reinforced plastic (FRP), PVC, or other acid resistant threaded casing will be used to complete the injection/recovery wells. These casing materials will provide chemical resistance for the planned sulfuric leach solutions. Well screen made of PVC or other suitable material will be used in the lower portion of each injection/recovery well as necessary to keep the hole open and to provide the operational flexibility to isolate segments of the broader injection zone.

9A.3.1.2 Casing Centralizers

Casing centralizers will be installed on the well casing every 40 feet along the entire well casing string. The casing centralizers will be made of stainless steel and will be suitable for contact with the forecast injectate solution.

9A.3.1.3 Screened Interval

The screened interval will vary in length at each well and may include one or more screened segments within the broader injection interval based on the characteristics of the formation. No screened interval will be installed higher than 40 below the LBFU/oxide bedrock contact.

9A.3.1.4 Annular Seal

The annular seal will be installed from 40 feet below the LBFU/oxide bedrock contact to the surface. The annular seal material will be Type V cement, or equivalent, and will be installed either by the tremie method or by the displacement method.

9A.3.2 Well Construction

The well schematic shown in Drawing 9A-1 reflects the well construction procedures described below. Well construction descriptions include details of drilling, open-hole geophysics, casing, cementing, and cased-hole geophysics.

9A.3.2.1 Borehole Drilling

Borehole drilling consists of drilling a relatively large diameter borehole to accommodate installation of surface casing, then drilling a narrower borehole from the bottom of the surface casing to the total depth for geophysical logging and installation of the well. The surface casing boring will be drilled by the rotary method, and will be of a diameter of sufficient size to allow installation of the surface casing and annular seal. The surface casing will be installed with the top of the surface casing above ground surface to accommodate the mud-rotary drilling equipment. Cement grout will be installed in the annulus by the tremie or displacement method from the total depth of the surface casing borehole to ground surface.

The borehole in which the well will be constructed will be drilled from the bottom of the surface casing borehole to approximately 10 feet below the bottom of the oxide ore zone using the direct mud rotary, reverse circulation mud rotary or a casing advance drilling method as conditions require. The well boring will be of a diameter of sufficient size to allow installation of the well casing and annular materials.

9A.3.2.2 Open-Hole Geophysics

Limited open-hole geophysical logging may include relatively common tools such as caliper, gamma-ray, temperature, directional survey, and electrical logs but may be expanded to include other surveys as necessary.

9A.3.2.3 Well Casing

Casing materials for injection and production wells will be designed to resist corrosion, not fail in tension, and not collapse or burst. Proposed casing materials are shown in Drawing 9A-1.

During the installation of the well casing and screen, the boring will be kept full of drilling fluid and free of any obstructions detrimental to completing casing installation. The well casing and screen will be set centered in the hole so as not to interfere in any way with the complete well installation.

Casing centralizers will be secured to the well casing and screen at the intervals shown in Drawing 9A-1. The casing and screen will be hung in suspension until the filter pack and cement grout seal have been installed.

The casing installation process may include simultaneous installation of a tremie pipe, which will be removed from the well following completion of well construction and cementing operations. The tremie pipe will be used to install filter pack sand adjacent to the screened sections, and coated bentonite clay pellets adjacent to the blank casing intervals, to form hydraulic seals within the annular space between the blank casing intervals and borehole.

9A.3.2.4 Filter Pack and Intermediate Seal Installation

Filter pack sand will be placed to completely fill the annulus in the specified interval. During the time of placement, fluid circulation will be maintained through a swab block located approximately 40 feet below the fill depth of the filter pack sand. The swab block will be periodically reciprocated to remove fine-grained material, prevent bridging, and aid in settling the filter pack in the borehole. Drilling fluid will be maintained throughout the full depth of the well to land surface, and the well casing and screen will be maintained in tension until the filter material placement has been completed to the specified level.

Filter pack will be installed by use of a tremie pipe. At no time will the bottom of the tremie pipe be located at a distance of greater than 40 feet above the interval being filled during filter pack placement. The tremie pipe will be moved upward during installation of these sand and bentonite intervals, until the top bentonite seal is installed above the uppermost well screen interval. The same tremie pipe will then be used for cementing of the upper FRP casing.

The level of the filter pack will be measured periodically during placement with a wireline sounder. Placement of the filter pack will be continuous, except when additional precautions are necessary to prevent bridging, or measurements of the filter pack level are being conducted. The quantity of filter pack material placed in the annulus will not be less than that of the computed volume.

As required by formation conditions, Curis Arizona may choose to install intermediate bentonite seals at selected intervals within the filter pack. Bentonite seals will be installed using the same tremie pipe used for filter pack emplacement.

9A.3.2.5 Cementing

Once the well casing, screen and filter pack have been installed, cementing of the upper portion of the well casing, from the bottom of the bedrock exclusion zone to ground surface will be accomplished by pumping a cement slurry down a tremie pipe positioned with the pipe's lower end near the bottom of the exclusion zone, forcing the cement to fill the annular space between the borehole and casing from the bottom up to the surface.

Cement grout will be placed to completely fill the well annulus within the specified interval. Prior to pumping, the cement grout will be passed through a ½-inch slotted bar strainer in order to remove any unmixed lumps. During the cement grout installation, the discharge end of the tremie pipe will be continuously submerged in the grout until the zone to be grouted is completely filled.

The well casing will be hung in tension until the cement grout has cured. The well casing will be filled with a fluid of sufficient density to maintain an equalization of pressures to prevent collapse of the well casing during cementing.

Cement will consist of sulfate-resistant Portland Type V cement, unless Curis Arizona submits the following information to the Director regarding a Type V substitute. A suitable Type V substitute must meet the following requirements:

1. The results of an immersion test for resistance to pregnant leach solution or equivalent mass samples of Type V cement and any proposed substitute;
2. A comparison of the percentage weight change between samples;
3. An acceptable substitute will experience little visual change, a weight loss or gain within 5% to 8%, and no significant change in compressive strength; and
4. Upon completion of this demonstration, a substitute cement that meets these criteria may be substituted for Type V cement for well construction.

Water and/or appropriate mud-breaker chemicals will be circulated through the tremie pipe prior to cementing, to reduce drilling mud viscosity and assist in removal of mud from the borehole-casing annulus. The cement slurry will be pumped at the greatest flow rate possible, to promote removal of bentonite mud from the annular space, and enhance bonding between the cement and the casing and formation. An excess quantity of cement will be pumped into the annular space, in order to verify "clean" cement slurry returns from the well prior to terminating the cementing procedure. Following installation of the cement slurry, the tremie pipe will be removed from the well, and the cement allowed to cure for a minimum of 24 hours before performing additional operations on the well.

9A.3.2.6 Cased-Hole Geophysics

Cased-hole geophysical surveys may include methods such as downhole flowmeter surveys and differential temperature logs to define the variation in hydraulic conductivity, or flow profile, within the screened interval of the well. Cement bond logs may be conducted on an experimental basis to determine if they produce useful information in the low-density FRP casing material. Additional surveys may be conducted as required.

9A.3.3 Well Inspection and Monitoring

9A.3.3.1 Inspection

Inspection of injection and recovery wells includes periodic visual inspection of well heads during pilot testing operations and mechanical integrity testing to ensure well casings maintain the necessary strength to continue pilot testing operations.

Visual inspection of well heads will include examination of concrete surfaces, fittings, valves, and electronic equipment to identify signs of leakage or other defects.

Mechanical integrity is defined as the ability of the well to withstand the design injection pressure. Inspection of each well to determine if it meets mechanical integrity requirements includes an initial mechanical integrity test and subsequent tests conducted at 5-year intervals. However, it is anticipated that the PTF will be closed and that the associated injection and recovery wells will have been plugged in accordance with the plugging and abandonment plan prior to the 5-year re-test.

Pursuant to 40 CFR 144.51(q), Curis Arizona must establish and maintain mechanical integrity at each injection and recovery well prior to commencing injection in any well.

The Underground Injection Control (UIC) Permit will detail a specific method for conducting a mechanical integrity test to verify that there are no significant leaks in a well casing, tubing or packer, in accordance with

the requirements of 40 CFR 146.8(a)(1). Curis Arizona operators will conduct the Part I mechanical integrity test in accordance with the provisions of the reissued UIC Permit.

9A.3.3.2 Monitoring

Curis Arizona will monitor injection pressures in each injection well by means of a pressure transducer installed at each well head. The transducers will measure fluid pressure within the injection piping down gradient of all valving and pressure control equipment at each well. Each of the transducers will report to a SCADA system that will include a PLC programmed to limit pressures at each well head to the maximum permitted pressure for the specific well.

In the event that pressure in any well rises to the maximum allowable injection pressure for that well, the transducer signal to the PLC will trigger an alarm, alerting the operator that the well must be shut down and inspected to determine the cause of the elevated pressure.

In the event that pressure in any well drops by more than 20 percent in a 24-hour period, the transducer signal to the PLC will trigger an alarm alerting the operator that the well should be shut down to determine the cause of the pressure decrease.

9A.3.4 Well Heads, Manifolds and Controls

9A.3.4.1 Containment

PTF wells will be protected from storm water run-on by earthen berms. All PTF wells will be equipped with wellhead piping (Drawing 9A-2) and a small containment sump. Fluids will be conveyed to and from individual wells and manifolds (headers) in high-density polyethylene (HDPE) pipes to above-ground surface tanks located in the beneficiation area. Within the PTF well field pipes will lie on the soil surface and will be inspected daily for leaks. Pipelines conveying PLS and raffinate between the PTF well field and the beneficiation area will be composed of HDPE and will be placed in channels lined with HDPE and equipped with sumps. (See Drawing 000-CI-009 of Exhibit 9B for design details of lined pipeline channels.) The sumps will be sized to contain a 100-year, 24-hour storm event plus 100 percent of the line capacity, including shutdown volumes (flow that occurs between the time of the line failure and the time that flow stops as a result of automatic shutdown devices.

9A.3.4.2 System Controls and Monitoring

9A.3.4.2.1 System Controls and Internal Monitoring

The injection and recovery systems will employ devices for metering flow and pressure, and for manually or automatically shutting down flow. The metering devices, which will be monitored in the control room, will provide operators with the information necessary to maintain a net flow out of the PTF well field on a daily basis. Valves and switches will provide for response to sudden or unanticipated conditions that require shutdown of portions of the injection or extraction systems.

Contingency conditions and associated response actions for the injection and recovery systems are summarized in Table 9A-1.

9A.3.4.2.2 Injection System

The injection system will carry the raffinate from the raffinate tank in the beneficiation area to the PTF well field where it will enter a manifold that will distribute the raffinate to the injection wells. .

Mechanical controls and monitoring devices incorporated into the injection system at each injection well and include:

- a pressure gauge;
- a flow meter at the injection manifold for measuring flow rates (gallons per minute);
- a totalizing flow meter for measuring cumulative flow (gallons) into the injection manifold;
- a flow switch at each injection well for indicating flow; and
- a valve at each injection well for controlling flow.

The pressure and flow monitoring devices will allow operators to regulate injection flow. At least every 24 hours, the totalized flows from of the injection manifold, including perimeter well flows, will be summed and compared to the summed totalized flows from of the recovery manifold, with the objective of verifying that total flows out of the recovery system exceed total flows into the injection system. If total flows out do not exceed total flows in, then adjustments to increase recovery or decrease injection will be made to correct this condition.

If an injection well will no longer take the solution being pumped into it, injection pressure drops significantly, it may be due to changes in the rock characteristics, clogging, or a break/failure of the well casing. If a casing breach is believed to have occurred, then the operator will shut down that well by taking it out of service and inspecting it for cause. If a well breach has occurred, then the well will either be taken out of service and closed permanently in compliance with the closure plan, or repaired.

9A.3.4.2.3 Recovery System

The recovery system comprises the individual wells, pumps, and headers at each recovery well and a recovery manifold. Mechanical controls and monitoring devices incorporated into the recovery system include:

- a continuous reading flow meter (gallons per minute) at the recovery manifold;
- a totalizing flow meter (gallons) at the recovery manifold;
- an isolation valve at each recovery well;
- a flow switch at each recovery well; and
- a pressure transducer within selected recovery wells.

The flow meters on the recovery manifold will allow the operators to regulate flow as necessary to ensure that net flow out exceeds net flow in.

Contingency conditions and associated response actions for the recovery system are summarized in Table 9A-1. Rapidly changing conditions affecting the recovery well system such as a faulty pump, clogging, or recovery well failure will be addressed in one of two ways. The primary safeguard will be mechanical. Fluid level measurements in the recovery well array will be maintained by use of a pressure transducer installed in selected wells, including recovery wells. The pressure transducer will activate an alarm whenever the fluid level is too high or too low. A low-level alarm will result in an automatic shutdown of the pump to prevent pump damage. In the event of a recovery well problem in which the alarm is not triggered, operators would be made aware of the problem by lower-than-normal flow rates out of the well header. The longest period of time in which such a condition could go unnoticed would be 24 hours.

As mentioned above, in the event of a recovery well failure, injection will be stopped in the entire PTF well field. Additionally, when the failed recovery well is back on line, it will be operated at a higher rate over a period of time without proportional injection to compensate for the period of time in which it was down.

9A.3.4.2.4 Tank Farm

The tank farm will include tanks fitted with a high-level alarm and level indicators. Both alarm and level indicator signals will be routed to the control room. An alarm will actuate if either a line fails or the tank high level is exceeded. The feed pump to the tank will be disabled automatically. Spilled solutions will be captured in the lined runoff pond able to contain 110 percent of the volume of the tank and line. The spilled volume will be pumped back into the circuit for reuse.

Solutions pumped between the PTF well field and the SX/EW plant will be metered for flow and pressure. The electronic monitoring system will alarm if a pump fails, flow is interrupted, or when anomalous conditions are detected. Loss of pressure or pressure exceeding a high setting will cause the pump to automatically shut down. In the event of such an occurrence, the plant operator will inspect the system. A third line is provided as backup in addition to the dedicated PLS or raffinate lines. The broken line will be repaired within 72 hours and spilled solutions captured in the spill control sumps will be pumped back to the water impoundment.

9A.4 External Monitoring

External monitoring of the in-situ process around the perimeter of the PTF well field will be conducted as an additional means of verifying hydraulic control. Hydraulic monitoring of the oxide zone around the perimeter of the PTF well field will be performed using at least four equally-spaced observation wells. In general, these observation wells will be located using the same grid pattern established for the recovery wells and will be screened across approximately the same interval as the recovery wells and injection wells. Hydraulic monitoring will entail pairing the nearest recovery well with observation wells for groundwater level comparisons and for verifying that the gradient is inward. An inward gradient exists when the water level in the observation well located on the outside of the injection and recovery well array is higher than in the paired recovery well. Monitoring will be accomplished using pressure transducers placed in both the observation wells and recovery wells from which average daily measurements will be recorded. If the average daily level in the perimeter or recovery well is determined to be higher than that of the observation well, the plant operator will increase recovery rates or decrease injection rates as necessary to rectify this condition.

9A.5 Well Abandonment Plan

Curis Arizona has proposed that all coreholes within 500 feet of any injection or recovery well be abandoned according to the Plugging and Abandonment Plan submitted with the UIC Permit application and included with this application as Exhibit 16A. The Plugging and Abandonment Plan is applicable to all wells and coreholes within 500 feet of the PTF well field. That includes injection and recovery wells that are to be abandoned after the water quality has been restored in the PTF well field following lixiviant injection.

In the Plugging and Abandonment Plan, Curis Arizona proposes to cement the entire length of an open hole to prevent migration of in-situ formation fluids between underground sources of drinking water. Curis Arizona has proposed cementing the entire length of the hole because it offers more protection of groundwater. In addition, Curis Arizona has proposed that the abandonment requirement not apply to point of compliance wells. The Plugging and Abandonment Plan is designed to meet the requirements of Arizona Administrative Code (A.A.C.) R12-15-816, and the requirements of 40 CFR § 146.10.

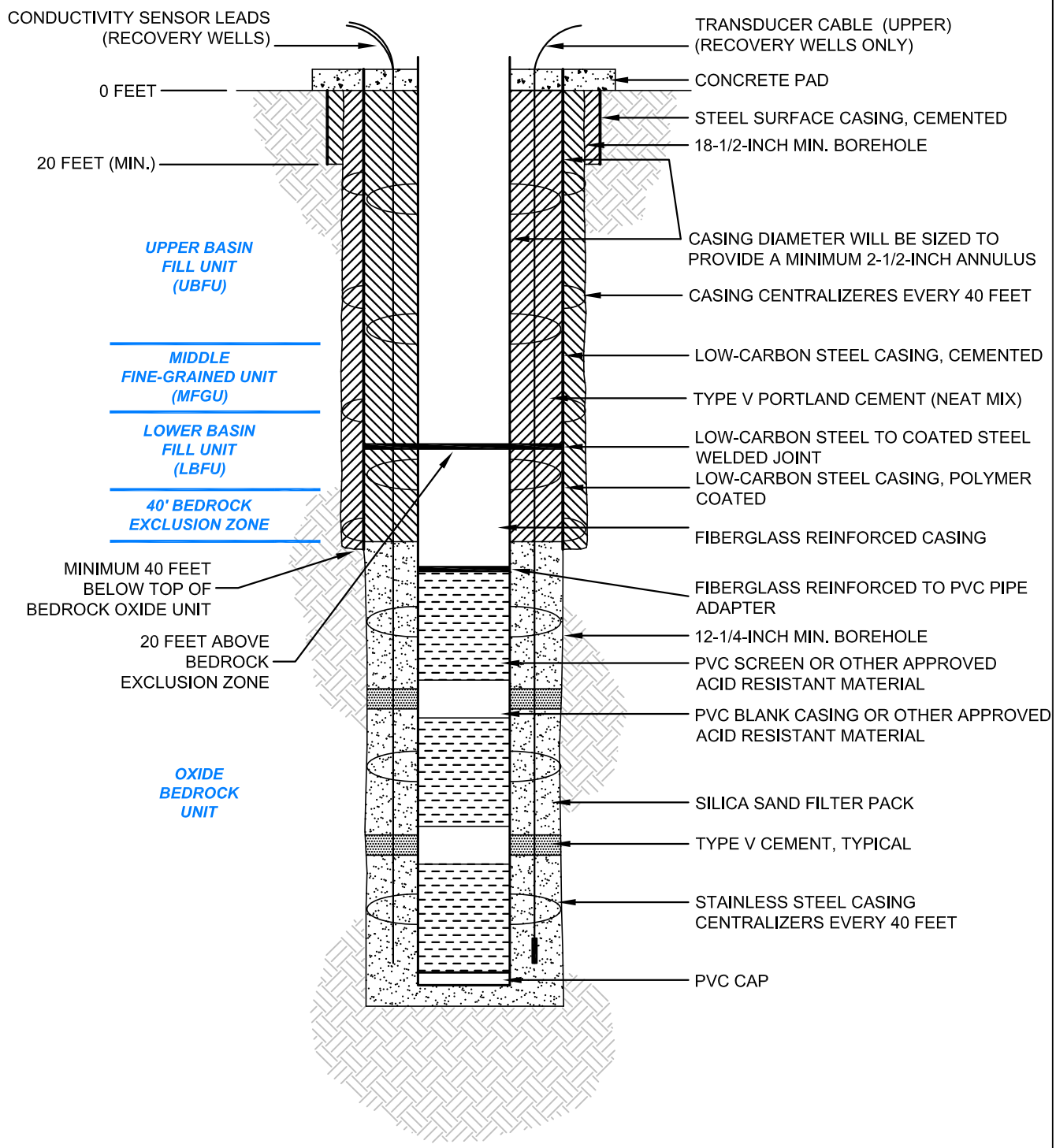

HALEY & ALDRICH

FLORENCE COPPER, INC.
FLORENCE, ARIZONA

TYPICAL INJECTION/RECOVERY WELL CONSTRUCTION DIAGRAM

FLORENCE COPPER INC.

SCALE: NOT TO SCALE
JULY 2014

DRAWING 9A-1

G:\PROJECTS\CURIS RESOURCES\38706-CURIS FEASIBILITY\DRAWINGS\2014 UIC APP\FIGURES M\9A-1.DWG

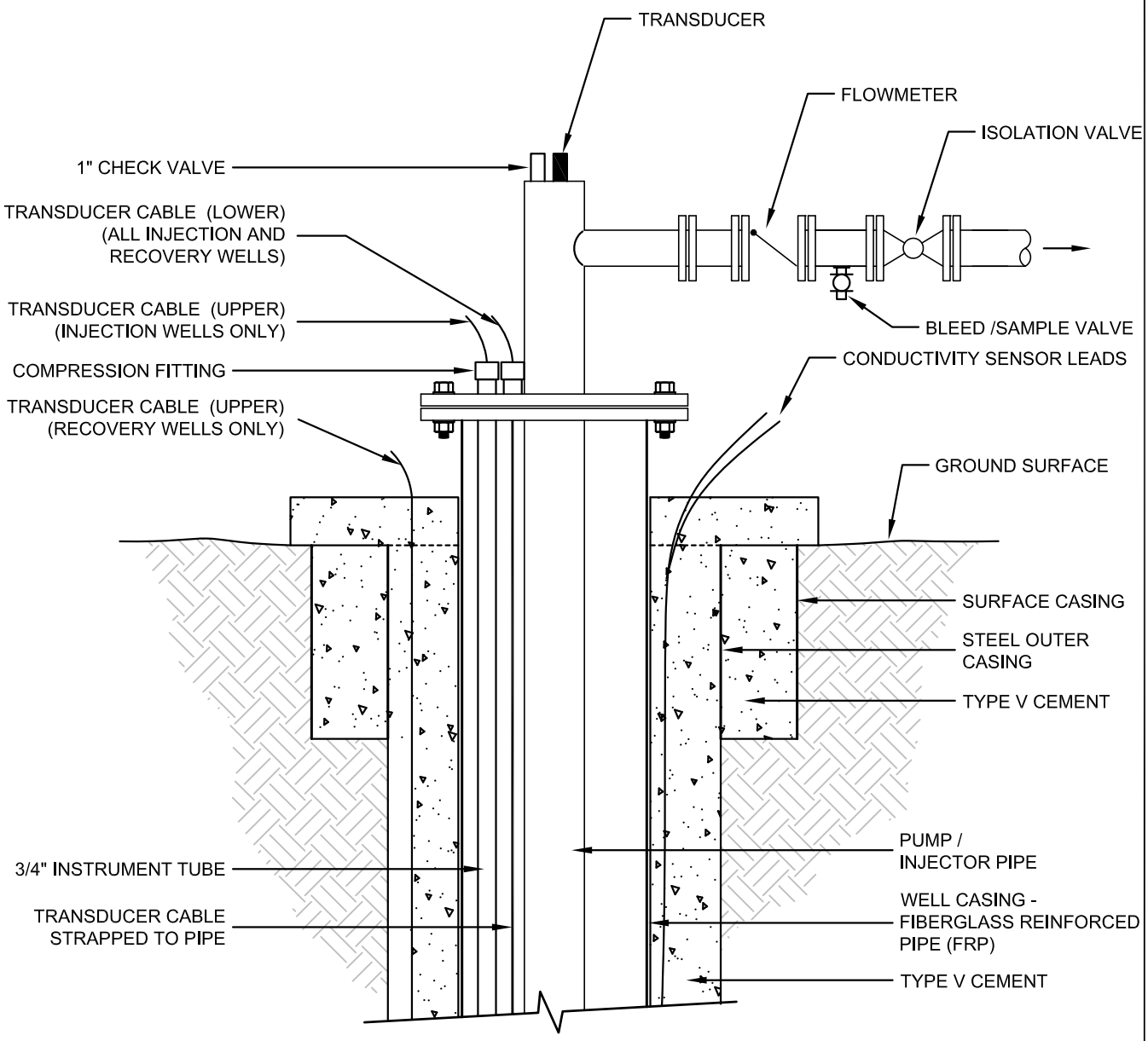

HALEY & ALDRICH

FLORENEC COPPER, INC.
FLORENCE, ARIZONA

INJECTION/RECOVERY
WELL HEAD DETAIL

FLORENCE COPPER INC.

SCALE: AS SHOWN
JULY 2014

DRAWING 9A-2

G:\PROJECTS\CURIS RESOURCES\38706-CURIS FEASIBILITY\DRAWINGS\2014 UIC APP\FIGURES M\9A-2.DWG

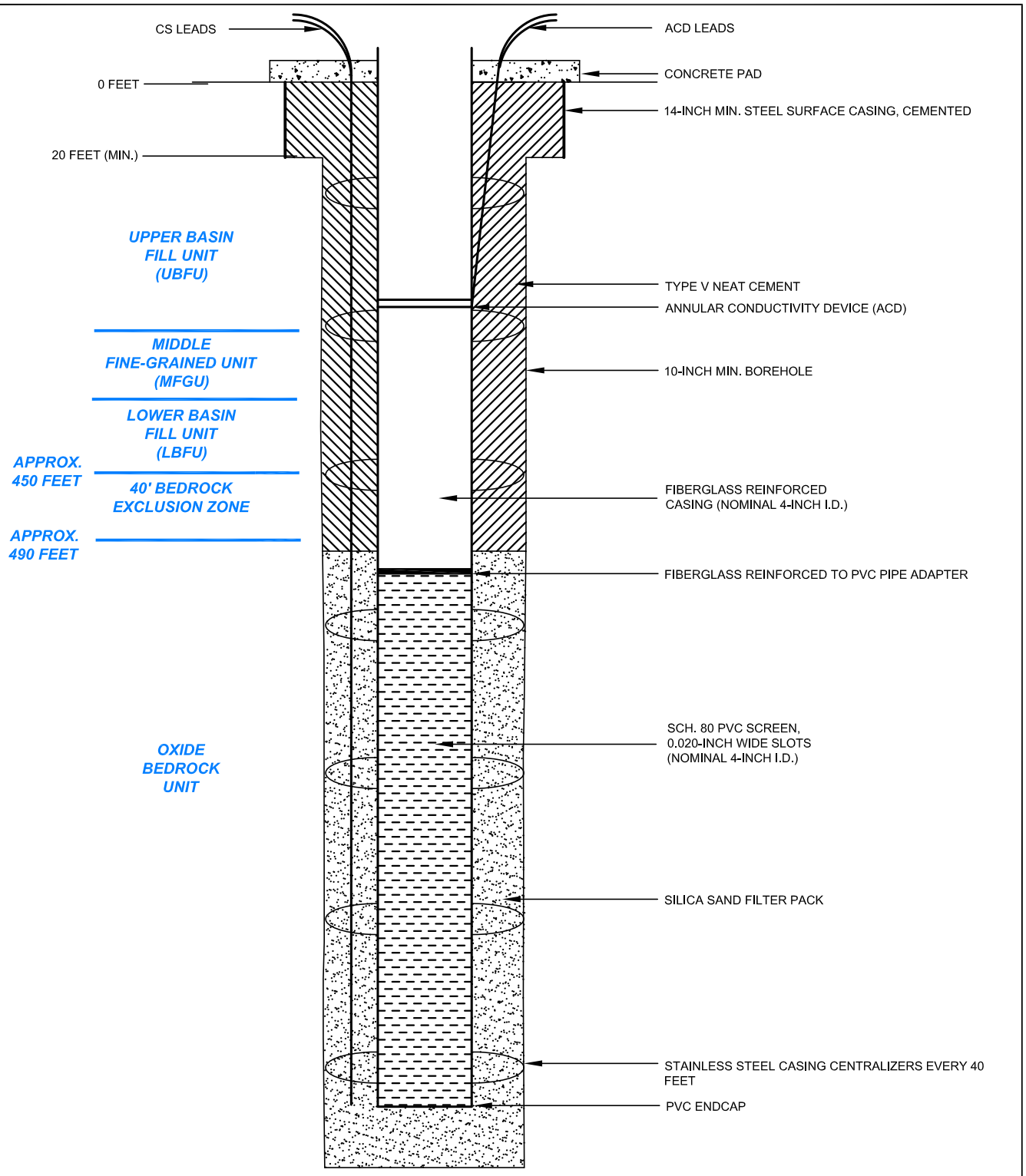

HALEY & ALDRICH

FLORENCE COPPER, INC.
FLORENCE, ARIZONA

TYPICAL OBSERVATION WELL CONSTRUCTION DIAGRAM

FLORENCE COPPER INC.

SCALE: NOT TO SCALE
JULY 2014

DRAWING 9A-3

G:\PROJECTS\CURIS RESOURCES\38706-CURIS FEASIBILITY\DRAWINGS\2014 UIC APP\FIGURES M\9A-3.DWG

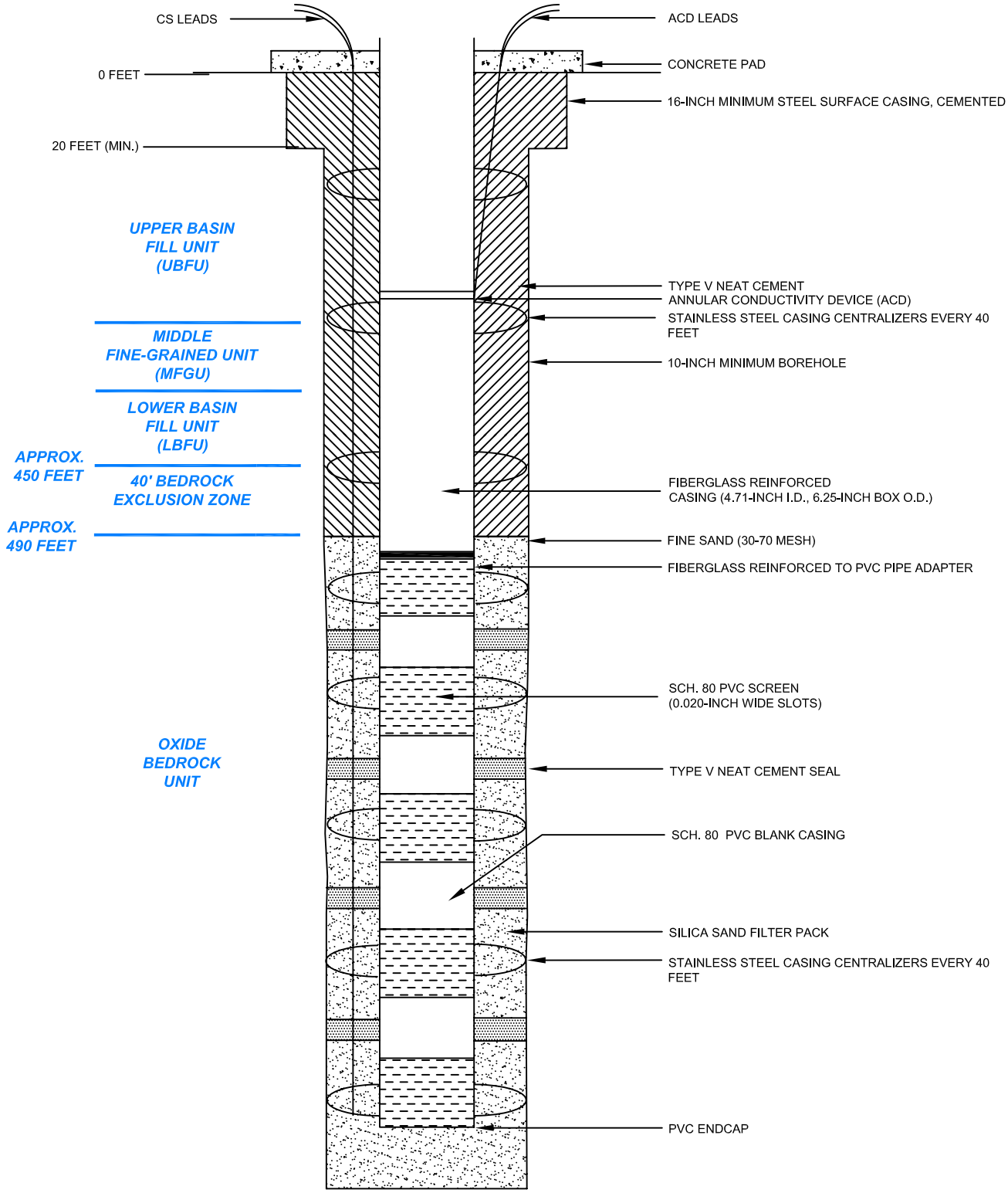

HALEY & ALDRICH

FLORENCE COPPER, INC.
FLORENCE, ARIZONA

TYPICAL MULTI-LEVEL SAMPLING WELL CONSTRUCTION DIAGRAM

FLORENCE COPPER INC.

SCALE: NOT TO SCALE
JULY 2014

DRAWING 9A-4

G:\PROJECTS\CURIS RESOURCES\38706-CURIS FEASIBILITY\DRAWINGS\2014 UIC APP\FIGURES M\9A-4.DWG

Table 1. ISCR Phase 1 Facility (PTF) Operations Plan (Monitoring and Response Requirements)

		Component	Monitoring Device	Condition	Possible Cause*	Response	Follow-up Action
System Monitoring and Control Devices	Injection System	Injection Manifold and Pipeline	Pressure Gage or Transducer with upper and lower set points	Pressure exceeds upper setting	Improper pump setting, clogged screens, reduced formation permeability, obstructed well or equipment.	Alarm in control room, stop flow at injection manifold	Restart injection at lower flow rates.
				Pressure below lower setting	Line break, casing or screen breach.	Alarm in control room, stop flow at injection manifold	Repair system before restarting flow to injection manifold.
			Flow Meter	Flow rate too high	Improper pump setting, line break, injection well short circuit.	Alarm in control room, stop or reduce flow at injection manifold	Inspect/repair injection system, increase flow rates in adjoining recovery monifolds as necessary.
				Flow rate too low	Improper pump setting, clogged screens, reduced formation permeability, obstructed well or equipment.	Alarm in control room, reduce flow rates in adjoining recovery manifolds	Inspect/repair system, adjust injection flow rate as necessary.
			Totalizing Flow Meter	Daily total flow: Total in > total out	Loss of hydraulic control.	Reduce injection flow rate or increase recovery flow rate	Follow Part II.H.1 of UIC Permit and related reporting and record-keeping requirements.
		Injection Well Head	Flow Meter	No flow	Power loss, line break, instrument failure.	Reduce recovery rate in adjacent wells	Repair system, adjust flow rates as necessary.
				Flow rate too high	Improper pump setting, injection well short circuit, damaged well casing or equipment.	Reduce injection flow rate as necessary	Inspect/repair injection system.
				Flow rate too low	Improper pump setting, reduced formation permeability, obstructed well or equipment.	Reduce flow rates in adjoining recovery manifolds	Inspect/repair system, adjust injection flow rate as necessary.
			Transducer	Pressure exceeds upper limit	Improper pump setting, clogged screens, reduced formation permeability, obstructed well or equipment.	Alarm in control room, stop flow at injection manifold	Restart injection at lower flow rates.
				Pressure below lower limit	Line break, casing or screen breach.	Alarm in control room, stop flow at injection manifold	Repair system before restarting flow to injection manifold.
		Injection Well Annular Space	Transducer	Fluid level too high	Loss of packer pressure, injection tubing failure, formation bypass to upper screened zone	Inspect packer pressure, pressure test packer lines, inspect injection tubing, inspect fluid level conditions at other injection wells	Repair or replace packer or inflation equipment if necessary, replace damaged injection tubing, monitor fluid level conditons
	Recovery System	Recovery Manifold and Pipeline	Flow Meter	Flow rate too high	Improper pump setting.	Reduce recovery manifold flow rates as necessary	Inspect/repair system, reduce recovery flow rate as necessary.
				Flow rate too low	Improper pump setting, reduced formation permeability, obstructed well or equipment.	Increase pump rate	Inspect/repair system, reduce injection flow rate in adjacent manifolds as necessary.
			Totalizing Flow Meter	Daily total flow: Total in > total out	Loss of hydraulic control.	Reduce injection flow rate or increase recovery flow rate as necessary	Follow Part II.H.1 of UIC Permitand related reporting and record-keeping requirements.
		Recovery Well Head	Flow Meter Pressure Transducer (in selected wells only)	No flow	Power loss, intrument failure.	Alarm in control room, stop injection in adjoining injection wells	Repair system before restarting injection.
				Fluid level too high	Improper pump setting, short circuit in adjacent injection wells.	Alarm in control room, adjust pump setting, inspect well, reduce injection in adjoining wells as necessary	Inspect/repair recovery well and adjacent injection wells as necessary.
				Fluid level too low	Improper pump setting, clogged screen, reduced formation permeability.	Alarm in control room, automatic shut-off of pump	Evaluate formation, restart well at lower flow rate if necessary.
	ISCR Area Tanks	Raffinate/Lixiviant Tanks	Level Indicators	Fluid level too high	If in production mode, insufficient flow to injection wells or insufficient raffinate bleed to water impoundment. If in recirculation mode, too much flow from PLS tanks.	Alarm in control room, automatic shut-off of pumps at raffinate tanks	Inspect/repair injection system, adjust pump settings at raffinate tank.
				Fluid level too low	If in production mode, flow too high to injection manifolds or too much raffinate bleed to water impoundment. If in recirculation mode, insufficient flow from PLS tanks.	Alarm in control room, automatic shut-off of injection pumps	Inspect/repair injection/raffinate system, adjust pumps at raffinate tank.

Table 1. ISCR Phase 1 Facility (PTF) Operations Plan (Monitoring and Response Requirements)

		Component	Monitoring Device	Condition	Possible Cause*	Response	Follow-up Action
System Monitoring and Control Devices (continued)	ISCR Area Tanks (continued)	PLS Tanks	Level Indicators	Fluid level too high	Recovery rate too high, or flow to SX/EW too low if in production mode, or flow to raffinate tank too low if in recirulation mode.	Alarm in control room, automatic shut-off of recovery and injection wells	Inspect/repair injection system, adjust pumps to PLS pond and injection manifolds.
				Fluid level too low	Recovery rate too low or flow to SX/EW too high if in production mode, or flow to raffinate tank too high if in recirculation mode.	Alarm in control room, automatic shut-off of injection wells	Inspect/repair injection/recovery system; inspect/repair lines to raffinate tanks.
	Beneficiation Area Tanks	Raffinate/Lixiviant Tanks	Level Indicators	Fluid level too high	If in production mode, insufficient flow to injection wells or insufficient raffinate bleed to water impoundment. If in recirculation mode, too much flow from PLS tanks	Alarm in control room, automatic shut-off of pumps at raffinate tanks	Inspect/repair injection system, adjust pump settings at raffinate tank.
				Fluid level too low	If in production mode, flow too high to injection manifolds or too much raffinate bleed to water impoundment. If in recirculation mode, insufficient flow from PLS tanks.	Alarm in control room, automatic shut-off of injection pumps	Inspect/repair injection/raffinate system, adjust pumps at raffinate tank.
		PLS Tanks	Level Indicators	Fluid level too high	Recovery rate too high, or flow to SX/EW too low if in production mode, or flow to raffinate tank too low if in recirulation mode.	Alarm in control room, automatic shut-off of recovery and injection wells	Inspect/repair injection system, adjust pumps to PLS pond and injection manifolds.
				Fluid level too low	Recovery rate too low or flow to SX/EW too high if in production mode, or flow to raffinate tank too high if in recirculation mode.	Alarm in control room, automatic shut-off of injection wells	Inspect/repair injection/recovery system; inspect/repair lines to raffinate tanks.
	Pipeline Corridor	Sumps	Liquid Detectors	Liquid present	Precipitation or leak.	Alarm in control room. If not raining, arm immediate shut-off of associated pumps.	Assess liquid; return liquid to plant or water impoundment; evaluate and repair pipeline if needed.
	Runoff Pond	Sump	Liquid Level Indicator	Liquid accumulating in sump	Precipitation, leak, spill, wash down.	Alarm in control room; determine nature of liquid. Pump to PLS, raffinate tanks, or neutralizing unit/water impoundment depending on volume and source of liquid.	Inspect sump to confirm that accumulating liquids are being being removed.
	Water Impoundment	Leak Collection and Removal System (LCRS)	Conductivity probe	Presence of liquid in sump above pump-down level	Leak in upper (primary) liner.	Measure and record volume of liquid removed from LCRS sump, determine if ALR or RLL is exceeded.	If ALR or RLL is exceeded, follow APP contingency plan and related reporting and record-keeping requirements.
External Monitoring		Paired Recovery/Observation Wells	Pressure Transducer	Average daily head in recovery well > average daily head in observation well	Loss of hydraulic control.	Increase recovery flow rate or decrease injection flow rate as necessary	Follow Part II.H.1 of UIC Permit and related reporting and record-keeping requirements.

*Faulty monitoring devices will be evaluated as a possible cause of each listed condition.