EPA Moderated Transaction System (EMTS), Flow Configuration Document

Version 3.1

United States Environmental Protection Agency

EPA Moderated Transaction System (EMTS), Flow Configuration Document

Version 3.1

Compliance Division
Office of Transportation and Air Quality
U.S. Environmental Protection Agency

Prepared for EPA by
SRA International, Inc.
EPA Contract No. EP-C-11-007
Work Assignment No. 4-06

IIMPORTANT REMINDER:

Renewable Fuel Standard Reminder:
Regulated parties are urged to conduct due diligence investigations and exercise caution when conducting Renewable Identification Number (RIN) transactions. Neither EPA nor its systems, including the EPA Moderated Transaction System (EMTS), certify or validate RINs or make any provision for parties who, despite good faith, transfer or receive invalid RINs. As specified in the regulations at 40 CFR 80.1431(b)(2), invalid RINs cannot be used to achieve compliance with the Renewable Volume Obligations of an obligated party or exporter, regardless of the party's good faith belief that the RINs were valid at the time they were acquired. Additionally, the regulations at 40 CFR 80.1460(b)(2) prohibit the creation or transfer to any person of a RIN that is invalid.

Fuels Averaging, Banking, and Trading Reminder:
Regulated parties are urged to conduct due diligence investigations and exercise caution when conducting gasoline sulfur and benzene credit transactions. Neither EPA nor its systems, including the EPA Moderated Transaction System (EMTS), certify or validate gasoline sulfur or benzene credits. As specified in the regulations at 40 CFR 80.315(b)(2) and 40 CFR 80.1295(b)(2), invalid gasoline sulfur and benzene credits cannot be used for compliance, regardless of the party's good faith belief that the credits were valid at the time they were acquired.

United States Environmental Protection Agency

EPA-420-B-15-025
February 2015

Table of Contents

Table of Contents i
1 Change Tracking Log 1
1.1 Version and Component Alignment 2
2 Introduction 3
2.1 How to Use This FCD 4
3 Submission File Structure 5
3.1 Overview 5
3.2 Exchange Network Document Structure 5
3.3 Document Header 5
3.3.1 Namespace and Schema 5
3.3.2 Document Header Specifications 6
3.4 EMTS Namespace 8
3.5 Payload 9
3.5.1 Validating the EMTS XML 10
4 EMTS Flow Datasheet 10
5 Submission Processing and Feedback 11
5.1 Submission Using a Node or Node Client 11
5.2 Submission from the EMTS Website 14
5.3 Get Submission Status 17
5.4 Retrieve QA Feedback Report 18
5.5 Obtain Document History 21
5.6 Download Document 22
6 Data Publishing 22
6.1 Overview 22
6.2 EMTS Solicit Flow Steps 23
7 EMTS Archive Flow 30
7.1 Overview 30
7.2 Archive Submission 30
7.3 EMTS-ARCHIVE Flow 31
7.4 Download Archived Documents 32
8 Web Service Methods 33
8.1 Authenticate 33
8.2 Submit 33
8.3 GetStatus 34
8.4 Query 35
8.5 Solicit 35
8.6 Download 36
Appendix A 1
Node Options 1
Appendix B 1
OTAQ Registration Process 1
B–1 New User Registration 1
B–2 Node Client Registration 1
B–3 Full Node Registration 2
B–4 NAAS User Revocation 3
Appendix C 1

C-1 Procedure for Testing a Node in the Testing Environment 1
Appendix D 1
Accessing EMTS from MyCDX Web 1
Appendix E 1
Notifications for EMTS Flow 1
Appendix F 1
EMTS Web Service Documents 1
F–1 Intervals for Documents 1
F–2 Organization vs. Agent Documents 1
F–3 Document Parameters 2
F–4 Summary of Web Service Documents 3
F–5 RFS Pending Trades 13
F-6 RFS Pending Trade Details 14
F–7 RFS Monthly RIN Holdings 16
F–8 RFS RIN Holdings 17
F–9 RFS Monthly RIN Generation 18
F–10 RFS RIN Generation 21
F–11 RFS Monthly Transaction History 23
F–12 RFS Transaction History 26
F–13 RFS Expired Trades 28
F–14 RFS Completed Trades 29
F–15 RFS Cancelled Trades 31
F–16 RFS RIN Batches 33
F–17 RFS Pathway Status 33
F–18 RFS Transaction Status 34
F–19 RFS Monthly Verified RINs Generate Activity 36
F–20 RFS Verified RINs Generate Activity 39
F–21 RFS Verified RINs Retire Activity 42
F–22 RFS Verified RINs Sell Activity 43
F–23 RFS Verified RINs Separate Activity 45
F–24 RFS Agent Pending Trades 46
F–25 RFS Agent Pending Trade Details 47
F–26 RFS Agent RIN Holdings 47
F–27 RFS Agent Monthly RIN Generation 47
F–28 RFS Agent RIN Generation 47
F–29 RFS Agent Transaction History 48
F–30 RFS Agent Expired Trades Daily 48
F–31 RFS Agent Completed Trades 48
F–32 RFS Agent Cancelled Trades 48
F–33 RFS Agent RIN Batches Weekly 49
F–34 RFS Agent Transaction Status 49
F–35 Fuels ABT Credit Holdings 49
F–36 Fuels ABT Pending Trade Details 49
F–37 Fuels ABT Pending Trades 51
F–38 Fuels ABT Transaction Status 53
F–39 Monthly Fuels ABT Credit Holdings 54
F–40 Monthly Fuels ABT Transaction History 55
Appendix G 1
EMTS Support 1

1 Change Tracking Log

Date	Version	Description	Author
October 12, 2009	1.0	Original Draft.	PQA
November 18, 2009	1.0	Updates.	PQA
December 23, 2009	1.0	Updates describing the OTAQ Registration process. Clarification provided in Section 5 on the EMTS data flow.	PQA
January 11, 2010	1.0	Updates for submission and registration.	CGI
January 15, 2010	1.0	Updates.	CGI
January 18, 2010	1.0	Updates and addition of notifications.	PQA
March 12, 2010	1.0.a	Solicit and Archive flow.	CGI
March 31, 2010	1.0.a	Updates to Solicit and Archive flows. Update to Notifications and Web Service Documents.	PQA
June 2, 2010	1.1	Modification to schema. Updates to the solicit flow. Correction to web service parameter lists. Change in EMTS support email address.	SRA
July 28, 2011	1.4	Updates to Solicit, Notifications, and Documents.	SRA
October 7, 2011	1.4.6	Updates to submission processing to remove XML validation	SRA
November 23, 2011	1.5	Updates for the EMTS 1.5 release, including schema changes and new Agent reports.	SRA

Date	Version	Description	Author
September 18, 2014	3.0	Updates for the EMTS 3.0 release, including schema changes, report changes, new QAP reports, and notifications.	SRA
February 18, 2015	3.1	Updates for the EMTS v3.1 release, including schema and report changes related to Fuels Averaging, Banking, and Trading (ABT) program for Sulfur and Benzene credits	SRA

1.1 Version and Component Alignment

The following table indicates the version of related documents and components to which this document applies.

Component	Version(s) Supported	Description of Updates
FCD	V3.1	EMTS XSD 3.1 support
EMTS Schema	V3.1	EMTS XSD 3.1 schema
DET	V3.1	Per the EMTS XSD 3.1 schema

2 Introduction

The purpose of this Flow Configuration Document (FCD) is to describe the operation of the EPA Moderated Transaction System (EMTS) flow across the Exchange Network between industry users, the CDX Node, and the EPA's EMTS system. The EMTS flow fulfills the Renewable Fuel Standard (RFS2) submission requirements.

An FCD describes the operational aspects of an Exchange Network data exchange. The specifications included in this document define the approaches, supported data services, and protocols that are used to exchange information between submitters and EPA.

The document describes the data exchange processes by which industry users submit XML files to EMTS and retrieve documents from EMTS from an EPA Exchange Network 2.0 compliant node, such as the EMTS website, or third-party node software application.

At a high-level, the EMTS data flow includes the following steps (*Note:* "User" refers to a person or a software application):

1. An EMTS-registered user authenticates to the Exchange Network's Network Authentication and Authorization Services (NAAS).

2. The user submits EMTS transaction data as an XML file to the CDX Node using an Exchange Network 2.0-compliant node client.

3. The user's NAAS credentials are mapped to the user's Web CDX credentials, which are used by EMTS for authentication.

4. The CDX Node submits the XML file to EMTS.

5. EMTS validates the structure of the XML file and processes the contents of the file.

6. EMTS notifies the submitter regarding the status of the submission via email.

7. The user downloads the resulting QA Feedback report.

To retrieve documents from EMTS, the steps are:

1. An EMTS user subscribes to available documents from the EMTS website.

2. An EMTS-registered user authenticates to NAAS.

3. The user solicits the CDX node for a daily, 3 per day, weekly, or monthly document.

4. The user's NAAS credentials are mapped to the Web CDX credentials, which are used by EMTS for authentication.

5. The CDX Node forwards the document Solicit request to EMTS.

6. EMTS processes the Solicit request, and either submits the solicited document back to the CDX Node, or sends a notification to the CDX Node that the document is unavailable.

7. The user queries the CDX Node for the status of the Solicit request, and downloads the document from the CDX Node when it is ready.

2.1 How to Use This FCD

This document provides guidance on implementing and using the EMTS data flow. The document includes the following main sections:

Submission File Structure

This section describes the EMTS submission XML file structure. The submission file must adhere to this structure in order to be properly processed in route through the Exchange Network to EMTS.

EMTS Flow "Datasheet"

This section provides a datasheet that summarizes the main characteristics of the EMTS flow.

Submission Processing and Feedback

This section provides a description of the EMTS flow including submitting files from a node or node client and submitting files from the EMTS website.

Solicit Flow for Documents

This section provides a description of the EMTS flow used for the retrieval of documents.

Archived Files

This section describes how the CDX archives all submitted XML files and the process for users to retrieve these documents.

Web Service Methods

This section describes the web service methods utilized by the Exchange Network node in support of the EMTS flow.

Related Documents

In addition to this FCD, the submitter should obtain the following documents related to the EMTS Flow. These documents can be downloaded from http://www.exchangenetwork.net/exchanges/air/emts.htm.

- EMTS Data Exchange Template
- EMTS XSD
- EMTS Transaction Instructions

Help and Technical Assistance

If you have questions about reporting transactions to EMTS or using the EMTS website, contact EMTS Support:

- support@epamts-support.com

3 Submission File Structure

3.1 Overview

The EMTS submission file consists of a single XML document that can only be submitted from a node, node client, or the EMTS website. The submitted file must adhere to the Exchange Network Document v2.0 specifications. Information on the document structure can be found on the Exchange Network website at http://www.exchangenetwork.net/dev_schema/HeaderSpecification_v2.0.doc. The Exchange Document XSD is available at http://www.exchangenetwork.net/schema/header/2/header_v2.0.xsd.

3.2 Exchange Network Document Structure

The document structure is required for all Submit operations through the Exchange Network. Every submission file sent to EMTS must use the document structure to meet EPA CDX processing requirements. The root element is the Document element, with two child elements, Header and Payload. The Header contains information about the submitter and the contents of the payload. The Payload contains the actual EMTS data, adhering to the structure of the EMTS XSD 3.0 schema. Figure 1 below shows the file submission structure.

Figure 1: Submission File Structure

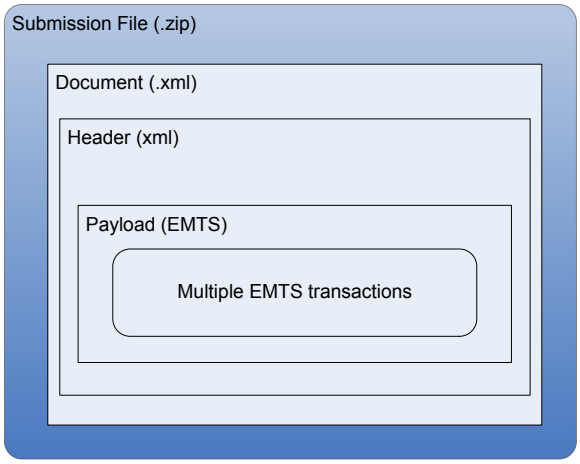

3.3 Document Header

3.3.1 Namespace and Schema

The XML namespace for the Exchange Network Document is located at:

http://www.exchangenetwork.net/schema/header/2.

All documents that use the Header 2.0 specification must use this namespace URL. The schema file is located at:

http://www.exchangenetwork.net/schema/header/2/header_v2.0.xsd.

Table 1 below specifies the Document tag attributes.

Table 1: Exchange Network Document 2.0 Attributes

Document (the root element of an Exchange Network Document)				
Name	**Description**	**Example**	**Required by the Schema**	**Notes**
ID	A submitter-chosen identifier for the XML file. This may be a file name or a submitter-specific identification number that can be used to identify the document.	ID123456789	Yes	This ID is not used by EMTS.
hdr XML Namespace	The Exchange Header 2.0 namespace. This is different from the EMTS namespace which is contained in the EMTS document.	xmlns:hdr = "http://www.exchangenetwork.net/schema/header/2"	Yes	Must be http://www.exchangenetwork.net/schema/header/2. All documents that use the Header 2.0 specification must use this namespace URL.
xsi XML Namespace	The W3C 2001 XML schema instance namespace.	xmlns:xsi = "http://www.w3.org/2001/XMLSchema-instance"	Yes	
Schema Location	References an XML Schema document that has a target namespace.	xsi:schemaLocation = "http://www.exchangenetwork.net/schema/header/2 http://www.exchangenetwork.net/schema/header/2/header_v2.0.xsd"	No	The first member of each pair is the namespace for which the second member is the hint describing where to find an appropriate schema specification document for validation.

3.3.2 Document Header Specifications

The document header provides the following information, or meta-data, pertaining to the submission:

- Description of payload; and
- Information regarding the submitter and date of submission.

The document header is the first child of the Document tag. The header contains the elements specified in Table 2. Note that EMTS does not use any of the header elements in its processing business rules. However, the submitter is free to populate these fields for their own purposes, either prior to, and/or after processing by EMTS.

Table 2: Exchange Document 2.0 Header Elements

Name	Description	Example	Required by XSD	Required by EMTS
AuthorName	Originator of the document. This should be the name of a person or a network node ID if the document is automatically generated.	John Smith	Yes. The tag must be present but a null string can be provided.	No
Organization Name	The organization to which the author belongs. It may be a state name, an organization name, or a company name. For submissions to the CDX node, this should be the name of the organization.	XYZ Fuels, Co.	Yes. The tag must be present but a null string can be provided.	No
DocumentTitle	Title of the document.	EMTS	Yes. The tag must be present but a null string can be provided.	No
CreationDate Time	This is a timestamp that marks when the document, including the payload and header, was created.	2006-04-05T09:30:47-05:00	Yes . Must be in valid xsd: datetime format.	No
Keywords	Description of the payload. Multiple keywords should be separated by commas. This is used only for document categorization and searching.	Ethanol	No	No
Comment	Additional comments for processors.	Generation	No	No
DataFlowName	The name of the data flow associated with the payload.	EMTS	No	No
DataService Name	Name of the data service.	GetEMTSDocument	No	No

Name	Description	Example	Required by XSD	Required by EMTS
SenderContact	The sender's additional contact information. It can contain sender's electronic address and/or telephone numbers where the author can be reached.	P.O. Box 1234 Richmond, VA	No	No
Application UserIdentifier	Application specific submitter identification.	JohnSmith	No	No
SenderAddress	A well-formed URI where results or reports can be sent.	N/A	No	No
Property	Other properties of the document using named value pairs.	N/A	No	No
Signature	An XML signature associated with the document.	N/A	No	No

3.4 EMTS Namespace

The EMTS namespace uses a URL to reference the location of the current version of EMTS on the CDX network, and allows the user to reference it through a prefix “emts:”. The major version number of EMTS is also included in the namespace. Without this reference, all complex types and XML elements cannot be validated resulting in an XML file validation error.

Figure 2 provides an XML example which declares the EMTS namespace through the use of the xmlns (XML Namespace) schema attribute and assigns the namespace a prefix of “emts:”.

Figure 2: Declaring the EMTS Namespace

```
<hdr:Payload>
    <!-- The EMTS payload starts here -->
    <emts:EMTS xsi:schemaLocation="http://www.exchangenetwork.net/schema/emts/2/0 EMTS_EMTS_v2.0.xsd"
               xmlns:emts="http://www.exchangenetwork.net/schema/emts/2"
               xmlns:xsi="http://www.w3.org/2001/XMLSchema-instance">
```

The declaration of the namespace is included at the top of each XML file, and allows the user to reference the EMTS complex types and elements with the “emts:” prefix followed by a colon (as in emts:GenerateTransactionDetail). Each complex type and XML element, including root elements, must contain the namespace prefix.

The following XML example demonstrates an XML submission file that contains the Exchange Network Header with an EMTS payload. <u>This file should be zipped before it is submitted to EMTS</u>.

Figure 3: EMTS XML File Example


```xml
<hdr:Document id="ID01" xsi:schemaLocation="http://www.exchangenetwork.net/schema/header/2 header.xsd"
              xmlns:hdr="http://www.exchangenetwork.net/schema/header/2" xmlns:ds="http://www.w3.org/2000/09/xmldsig#23"
              xmlns:xsi="http://www.w3.org/2001/XMLSchema-instance">
    <hdr:Header>
        <hdr:AuthorName>John Smith</hdr:AuthorName>
        <hdr:OrganizationName>XYZ Fuels, Co.</hdr:OrganizationName>
        <hdr:DocumentTitle>EMTS</hdr:DocumentTitle>
        <hdr:CreationDateTime>2011-11-23T15:35:45</hdr:CreationDateTime>
        <hdr:Comment>RIN generate</hdr:Comment>
        <hdr:DataFlowName>EMTS</hdr:DataFlowName>
        <hdr:ApplicationUserIdentifier>12345</hdr:ApplicationUserIdentifier>
    </hdr:Header>
    <hdr:Payload>
        <emts:EMTS xsi:schemaLocation="http://www.exchangenetwork.net/schema/emts/2/0 EMTS_EMTS_v2.0.xsd"
                   xmlns:emts="http://www.exchangenetwork.net/schema/emts/2"
                   xmlns:xsi="http://www.w3.org/2001/XMLSchema-instance">
            <emts:UserLoginText>User123</emts:UserLoginText>
            <emts:SubmittalCreationDate>2011-11-03</emts:SubmittalCreationDate>
            <emts:OrganizationIdentifier>4670</emts:OrganizationIdentifier>
            <emts:SubmittalCommentText>Ethanol Generate</emts:SubmittalCommentText>
            <emts:GenerateTransactionDetail>
                <emts:RINQuantity>2400</emts:RINQuantity>
                <emts:BatchVolume>2400</emts:BatchVolume>
                <emts:FuelCode>6</emts:FuelCode>
                <emts:FuelCategoryCode>10</emts:FuelCategoryCode>
                <emts:ProductionDate>2011-11-03</emts:ProductionDate>
                <emts:ProcessCode>60</emts:ProcessCode>
                <emts:DenaturantVolume>10</emts:DenaturantVolume>
                <emts:EquivalenceValue>1.0</emts:EquivalenceValue>
                <emts:TransactionDetailCommentText>Generate Batch</emts:TransactionDetailCommentText>
                <emts:GenerateOriginatingSourceDetail>
                    <emts:GenerateOrganizationIdentifier>4670</emts:GenerateOrganizationIdentifier>
                    <emts:GenerateFacilityIdentifier>46700</emts:GenerateFacilityIdentifier>
                    <emts:BatchNumberText>12345</emts:BatchNumberText>
                </emts:GenerateOriginatingSourceDetail>
                <emts:FeedstockDetail>
                    <emts:FeedstockCode>10</emts:FeedstockCode>
                    <emts:RenewableBiomassIndicator>true</emts:RenewableBiomassIndicator>
                    <emts:FeedstockQuantity>500</emts:FeedstockQuantity>
                    <emts:FeedstockMeasureCode>10</emts:FeedstockMeasureCode>
                    <emts:FeedstockDetailCommentText>Feedstock is Starch - Corn</emts:FeedstockDetailCommentText>
                </emts:FeedstockDetail>
                <emts:CoProductDetail>
                    <emts:CoProductCode>20</emts:CoProductCode>
                    <emts:CoProductDetailCommentText>Coproduct is Dry Distillers Grains</emts:CoProductDetailCommentText>
                </emts:CoProductDetail>
            </emts:GenerateTransactionDetail>
        </emts:EMTS>
    </hdr:Payload>
</hdr:Document>
```


3.5 Payload

EMTS supports the inclusion of only one submission file per submission. The CDX node will not route submissions including more than one submission file. However, the payload within the single submission file may contain multiple EMTS transactions. The format of the payload must be constructed in accordance with the EMTS XSD 3.0 schema.

3.5.1 Validating the EMTS XML

Prior to transmitting any XML file to EPA, the XML document should be checked for schema validity. This can be accomplished using either or both of the following methods:

- EPA's XML schema validation tool. This web-based validation tool is a set of XML web services for validating XML documents against the associated schemas and custom rules. This can be found at http://tools.epacdxnode.net/.

- A third party XML validation tool (e.g., XML Spy, Liquid XML, etc.) is strongly encouraged. The validation tool must validate that an XML document is both well-formed XML and valid against the EMTS schema specifications.

4 EMTS Flow Datasheet

There are two data flows for EMTS on the Exchange Network (see Table 3).

Table 3: EMTS Flow Datasheet

Specification	Data Flows	
	EMTS	EMTS-ARCHIVE
FCD Specifications	Sections 5, 6	Section 7
Flow Name	Submit and Solicit Parameters • securityToken: A security token issued by NAAS. • dataflow: The name of target dataflow: “EMTS”. Node Submission supports one document (file) per submission, and within the document, one payload only.	Submit Parameters • securityToken: A security token issued by NAAS. • dataflow: The name of target dataflow: “EMTS-ARCHIVE”. Node Submission supports one document (file) per submission, and within the document, one payload only.
Payload Schema	EMTS_EMTS_v3.1.xsd	N/A
Header Property	N/A	N/A
Payload Formatting Structure	The submitted document must be an XML document that is compressed as a .ZIP document type.	The submitted document must be an XML document that is compressed as a .ZIP document type.
Payload File Naming Convention	N/A	N/A
GetStatus Responses	All standard GetStatus responses.	All standard GetStatus responses.

(cont.)

Table 3: EMTS Flow Datasheet

Specification	Data Flows	
	EMTS	EMTS-ARCHIVE
Timing	See flow specifications in Sections 5 and 6.	See flow specifications in Section 7.
Authentication and User ID Mapping	All node users must be registered in NAAS and their CDX user IDs must be mapped to their NAAS IDs. Contact EMTS Support or see Appendix B for details.	This flow allows access through a single NAAS account from the EMTS node to submit XML files to the CDX node for archiving. This flow is not used by industry nodes.

5 Submission Processing and Feedback

In order to initiate an EMTS flow submission, the user must have a CDX web account to access the MyCDX website and have registered their organization and facilities through the OTAQReg Fuels Programs Registration application. The user must also have a NAAS account and have permission to participate in the EMTS data flow. Both node clients and full nodes must use NAAS accounts registered for the EMTS data flow. The submitter's NAAS ID must be mapped to his CDX User ID. See Appendix B: EMTS Registration Process, for more information on acquiring account and permissions.

5.1 Submission Using a Node or Node Client

Figure 4 illustrates how an EMTS submitter submits an XML file using a node or node client.

Figure 4: Submission from Node or Node Client

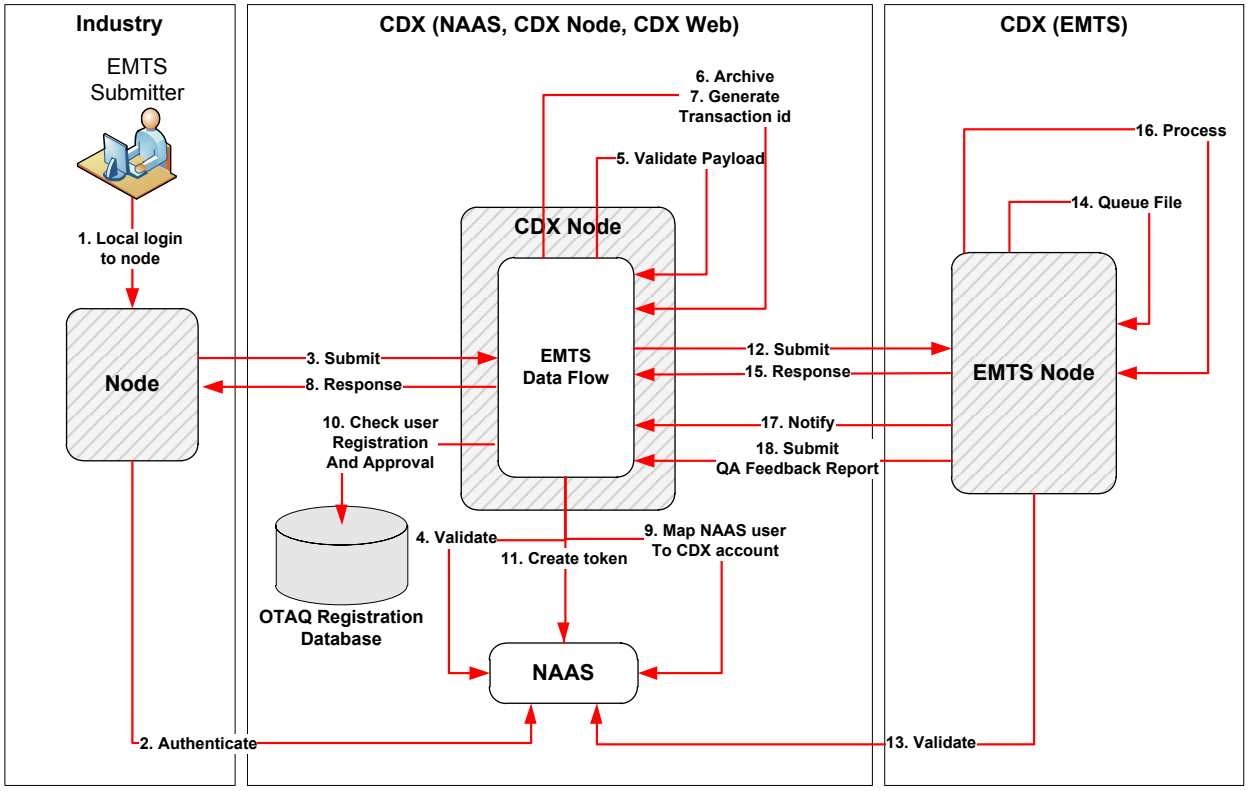

1. The submitter logs into her node client or full node application, referred to as the industry node, or "Node" in Figure 4. Depending on the node application, this step may or may not be required.

2. On behalf of the submitter, the industry node authenticates to NAAS via the CDX Node using the submitter provided NAAS User ID, or a per-industry-node NAAS User ID. The following CDX Node end-point URLs are used:

   Test: https://testngn.epacdxnode.net/ngn-enws20/services/NetworkNode2Service
   Prod: https://cdxnodengn.epa.gov/ngn-enws20/services/NetworkNode2Service

   The industry node must pass in the following parameters in the Authentication request:

   - userId: NAAS User ID
   - credential: Password
   - domain: "default"
   - authenticationMethod: "password"

   On success, the CDX Node will return a security token to the industry node. Upon failure, the CDX Node will return an Authentication SOAP Fault.

   The following sequence is performed as a synchronous set of actions. If an action fails, the CDX Node returns a failed submission response containing error information and the submission ends.

3. The industry node submits an XML file to the CDX Node. The following CDX Node end-point URLs are used:

Test: https://testngn.epacdxnode.net/ngn-enws20/services/NetworkNode2Service
Prod: https://cdxnodengn.epa.gov/ngn-enws20/services/NetworkNode2Service

The industry node must pass the following parameters in the Submit request:

- security token: Security token received in Step 2.
- transactionId: Empty (not used)
- dataflow: EMTS
- flowOperation: Empty (not used)
- recipient: Empty (not used)
- documents: One document containing the zipped EMTS XML document.

4. The CDX Node validates the security token against NAAS. This will authenticate the submitter and authorize the submission to EMTS.

5. The CDX Node validates the submitted document. The submission may contain one document only, which must be compressed and be a "ZIP" document type.

6. The CDX Node archives the submitted document.

7. The CDX Node generates a unique transaction ID and assigns it the status of “RECEIVED”. The submission CDX Transaction ID uniquely identifies the submission, and can be used to check the status of the submission. The CDX Node provided “Transaction ID” should not be confused with EMTS Transaction IDs. A CDX Transaction ID is application agnostic, and uniquely identifies a given submission between the submitter and the EMTS Node. EMTS Transaction IDs are EMTS application specific, and have no meaning outside of EMTS.

8. If previous operations were successful, the CDX Node returns a Submit response to the industry node:

   - transactionId: The unique CDX Transaction ID for the submission.
   - status: RECEIVED
   - statusDetails: The submission has been accepted and can be tracked using the CDX Transaction ID. The submitter node is expected to store the returned CDX Transaction ID for further processing.

   If the previous operation fails, the CDX Node returns a SOAP Fault to the industry node. See Section 5.3, “*Get Submission Status,*” for more details on the submit web service.

The following sequence is performed asynchronously after the submit response is sent back to the submitting node.

9. The CDX Node updates the status to “PROCESSING”. The CDX Node maps the submitter's NAAS credentials to his Web CDX credentials. The submitter's Web CDX credentials will be submitted to EMTS and used by EMTS for submission authentication and authorization. If validation fails, the CDX Node sends an email to the submitter regarding the failure.

10. The CDX Node verifies that the user is registered and active in the OTAQ Registration database. If the user is not active or not registered in the OTAQ Registration database, the transaction status is set to “FAILED” and the transaction is ended. The CDX Node sends an email to the submitter regarding the failure.

11. The CDX Node creates a security token that includes the submitter's Web CDX user ID, email address, and affiliation. This is mapped from the submitter's NAAS User ID in Step 9 above.

12. The CDX Node submits the XML file to the EMTS Node, using the security token created in Step 13. The CDX Node will resubmit two times, with a one hour interval between the two attempts, for a total of three submission attempts if the submission to the EMTS Node is not successful. If the CDX Node successfully submits the document to the EMTS Node, the transaction status is set to "PENDING". If the submission fails, the transaction status is set to "FAILED" and the transaction is ended. The CDX Node sends an email to the submitter regarding the failure.

13. The EMTS Node validates the security token with NAAS and extracts the submitter's Web CDX ID from the security token.

14. The EMTS Node queues the submission for processing.

15. If Steps 15 and 16 were successful, the EMTS Node returns a successful Submit response to the CDX Node. If processing fails, the EMTS Node returns a SOAP fault to the CDX Node. The CDX Node sets the transaction status to "FAILED" and the transaction is ended. The CDX Node sends an email to the submitter and the CDX Node Administrator regarding the failure.

The following sequence is performed asynchronously after the submit response action in Step 17.

16. EMTS processes the submission.

17. If processing is successful, the following steps are performed:

    - A Notify request is sent to the CDX Node providing the final status of the submission.
    - The CDX Node ends the transaction and updates the transaction status to "COMPLETED".
    - The CDX Node sends an email to the submitter regarding the completion of the transaction.

18. If processing fails, the following steps will be performed:

    - The EMTS Node submits the QA Feedback report to the CDX Node. The document contains a zipped QA Feedback report. See Section 5.4, "*Retrieve QA Feedback Report,*" for additional information regarding retrieving the report.
    - The CDX Node archives the QA Feedback report.
    - The EMTS Node issues a Notify request to inform the CDX Node of the failure.
    - The CDX Node ends the transaction and updates Transaction status to "FAILED".
    - The CDX Node sends an email to the submitter regarding the failure of a transaction.
    - Note: Starting with the EMTS 1.4.6 release, the CDX Node is no longer performing the XSD schema validation. Instead, EMTS is performing such function, and in the case of a failed XSD schema validation, EMTS creates a corresponding QA check error and notifies the submitter of the error according to the normal QA Feedback Report mechanism described above.

5.2 Submission from the EMTS Website

The following diagram and steps demonstrate how an EMTS submitter submits an XML file from the EMTS website. The EMTS website has a node client interface customized for the EMTS flow.

Figure 5: Submission from EMTS Website

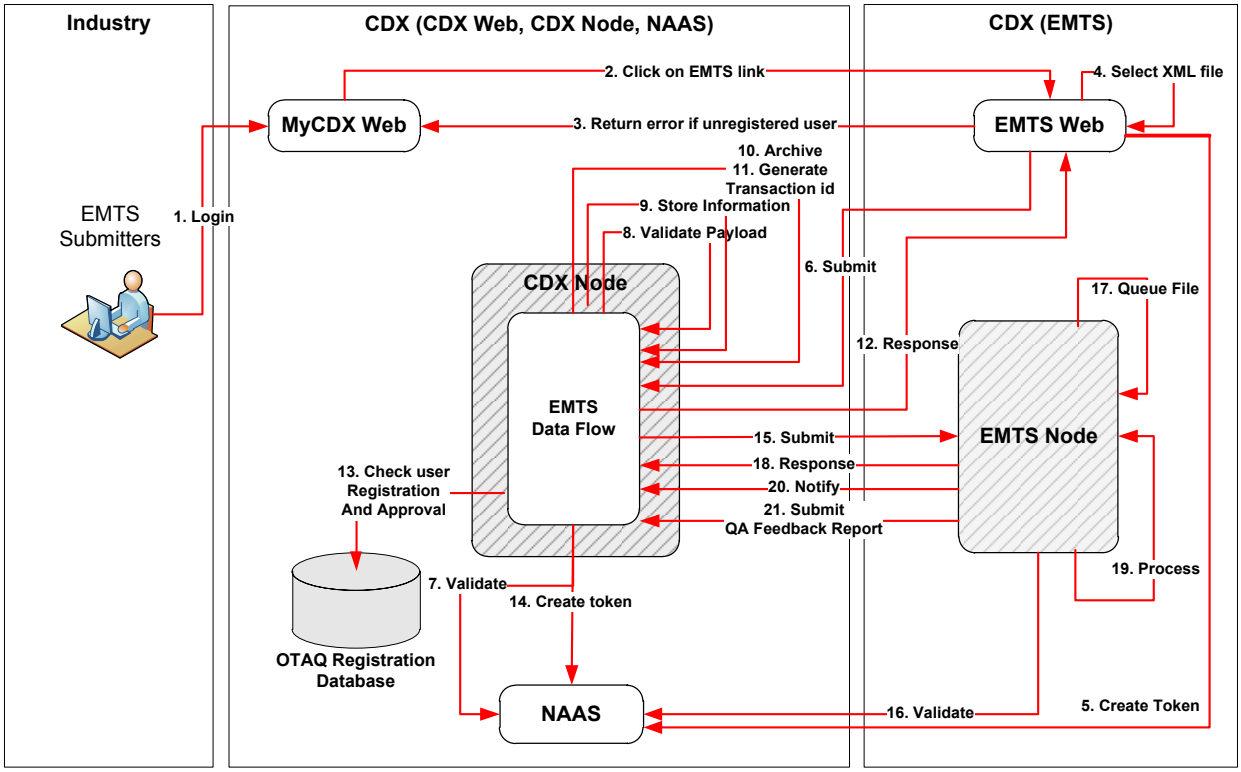

1. The user logs into the MyCDX Website.

2. The user clicks the OTAQEMTS link. The user's CDX credentials are passed to the EMTS website for auto sign-on to EMTS.

3. If the user does not have permission to operate in the EMTS website, the user is given an error message and redirected back to the MyCDX website. For more information about registering for EMTS, see Appendix B.

The following sequence is performed as a synchronous set of actions:

4. The user selects an XML file to submit. The CDX Node URL, data flow name, and other submission parameters are filled in automatically by EMTS. EMTS verifies that the XML file conforms to the Exchange Network Header 2.0 and EMTS .XSD specifications, and compresses the file if it is not already compressed.

5. EMTS creates a security token that contains the user's CDX Web User ID, email address, and affiliation.

6. EMTS submits the XML file to the CDX Node, using the security token created in Step 5 above.

7. The CDX Node validates the security token against NAAS which will authenticate the submitter and authorize the submission to EMTS.

8. The CDX Node validates the payload. The submission payload must contain one document only, and the document must be compressed and be a "ZIP" document type.

9. The CDX extracts the submitter's Web CDX user ID, email address, and affiliation and archives this information for future use.

10. The CDX Node archives the submitted document.

11. The CDX Node generates a unique transaction ID and updates the status to “RECEIVED”. The submission CDX Transaction ID uniquely identifies the submission, and can be used to check the status of the submission.

12. If previous operations are successful, the CDX Node returns the following Submit response to EMTS:

    - transactionId: The unique CDX Transaction ID.
    - status: RECEIVED
    - statusDetail: The submission has been accepted and can be tracked using the CDX Transaction ID. See Section 5.3, “*Get Submission Status,*” for additional information regarding the submission status.

    If the previous operation fails, the CDX Node returns a SOAP fault to EMTS, and an error message is displayed to the end-user.

The following sequence is performed asynchronously after the submit response is sent back to EMTS.

13. The CDX Node updates the status to “PROCESSING”, and verifies that the submitter is registered and active in the OTAQ Registration database. If the submitter is not active or not registered in the OTAQ Registration database, the transaction status is set to “FAILED” and the transaction is ended. The CDX Node sends an email to the submitter and the CDX Node Administrator regarding the failure.

14. The CDX Node creates a security token that includes the submitter's Web CDX user ID, email address, and affiliation. This is extracted from the security token in Step 8 above.

15. The CDX Node submits the XML file to the EMTS Node, using the security token created in Step 16. The CDX Node will retry two times if the submission to the EMTS Node is not successful. If the CDX Node successfully submits the document to the EMTS Node, the transaction status is set to “PENDING”. If the submission fails, the transaction status is set to “FAILED” and the transaction is ended. The CDX Node sends an email to the submitter and the CDX Node Administrator regarding the failure.

16. The EMTS Node validates the security token with NAAS and extracts the submitter's Web CDX user ID from the security token.

17. The EMTS Node queues the submission for processing.

18. If Steps 18 and 19 were successful, the EMTS Node returns a successful submission response to the CDX Node. If Step 18 or 19 failed, the EMTS Node returns a SOAP fault to the CDX Node. The CDX Node sets the transaction status to “FAILED” and the transaction is ended. The CDX Node sends an email to the submitter and the CDX Node Administrator regarding the failure.

The following sequence is performed asynchronously after the submit response action in Step 19.

19. EMTS processes the submission.

20. If processing is successful, the following steps are performed:

    - A Notify request is sent to the CDX Node providing the final status of the submission.
    - The CDX Node ends the transaction and updates the transaction status to “Completed”.
    - The CDX Node sends an email to the submitter regarding the completion of the transaction.

21. If processing fails, the following steps are performed:

    - The EMTS Node submits the QA Feedback report to the CDX Node. The document contains a zipped QA Feedback report. See Section 5.4, “*Retrieve QA Feedback Report,*” for additional information regarding retrieving the report.
    - The CDX Node archives the QA Feedback report.
    - The EMTS Node issues a Notify request to inform the CDX Node of the failure.
    - The CDX Node ends the transaction and updates Transaction status to “FAILED”.
    - The CDX Node sends an email to the submitter regarding the failure of a transaction.
    - Note: Starting with the EMTS 1.4.6 release, the CDX Node is no longer performing the XSD schema validation. Instead, EMTS is performing such function, and in the case of a failed XSD schema validation, EMTS creates a corresponding QA check error and notifies the submitter of the error according to the normal QA Feedback Report mechanism described above.

5.3 Get Submission Status

The following steps demonstrate how the industry node obtains the status of a submission from the CDX Node. This functionality is applicable to all nodes and node clients.

1. The submitter logs into NAAS using her NAAS User ID. NAAS returns a security token to the submitter's node.

2. The industry node issues the GetStatus request using one of the following end-point URLs:

   Test: https://testngn.epacdxnode.net/ngn-enws20/services/NetworkNode2Service
   Prod: https://cdxnodengn.epa.gov/ngn-enws20/services/NetworkNode2Service

   The following parameters are used:

   - securityToken: Security token returned in Step 1.
   - transactionId: Transaction ID returned in Section 5.1, Step 8.

3. The CDX Node validates the security token against NAAS.

4. If the user was authenticated and authorized, the CDX Node returns a StatusResponse containing status information:

   - transactionId: Passed Transaction ID.
   - status: CDX Node returns any of the following statuses:

     - RECEIVED: Submission was received and Steps 4–8 from Section 5.1 were successfully performed.
     - PROCESSING: Submission was received and Steps 9–13 were successfully performed.

  - PENDING: Submission was successfully distributed to EMTS Node.
  - COMPLETED: Submission was received by EMTS Node and processed.
  - FAILED: Submission failed.

- statusDetail: A string that provides a human readable description of the failure if the CDX Node returns FAILED as transaction status. For example: "E_BackendProcessing: The EMTS submission with transaction ID 123456789 completed with submission status: Failed"

If the transaction status is “FAILED” then the submitter node can extract the following status details from the GetStatus response (see Table 4).

Table 4: Status Detail Codes and Descriptions

StatusDetail Prefix	Description	Initiated By
E_ApplicationIdMapping	CDX is unable to find a CDX Web user identification based on the NAAS identification.	CDX
E_OtaqRegNotRegistered	The CDX was unable to verify that the submitter is a registered user in the OTAQ Registration database.	CDX
E_OtaqRegNotApproved	The CDX was unable to verify that the submitter is activated in the OTAQ Registration database.	CDX
E_Distribution	The CDX Node was unable to distribute the document to EMTS.	CDX
E_BackendXsdValidationError	The submitted document does not conform to the EMTS XSD 3.0 schema.	EMTS
E_BackendProcessing	The Document failed processing in EMTS.	EMTS

5.4 Retrieve QA Feedback Report

EMTS will submit a QA Feedback report to the CDX Node upon a failed submission. A QA Feedback report is not generated if the submission was successfully processed. The report contains a complete list of errors encountered when processing a submitted file, including the case of an XML schema validation error. The following steps demonstrate how the industry node obtains the QA Feedback report using web services methods (see Figure 6).

Figure 6: Retrieve QA Feedback Report

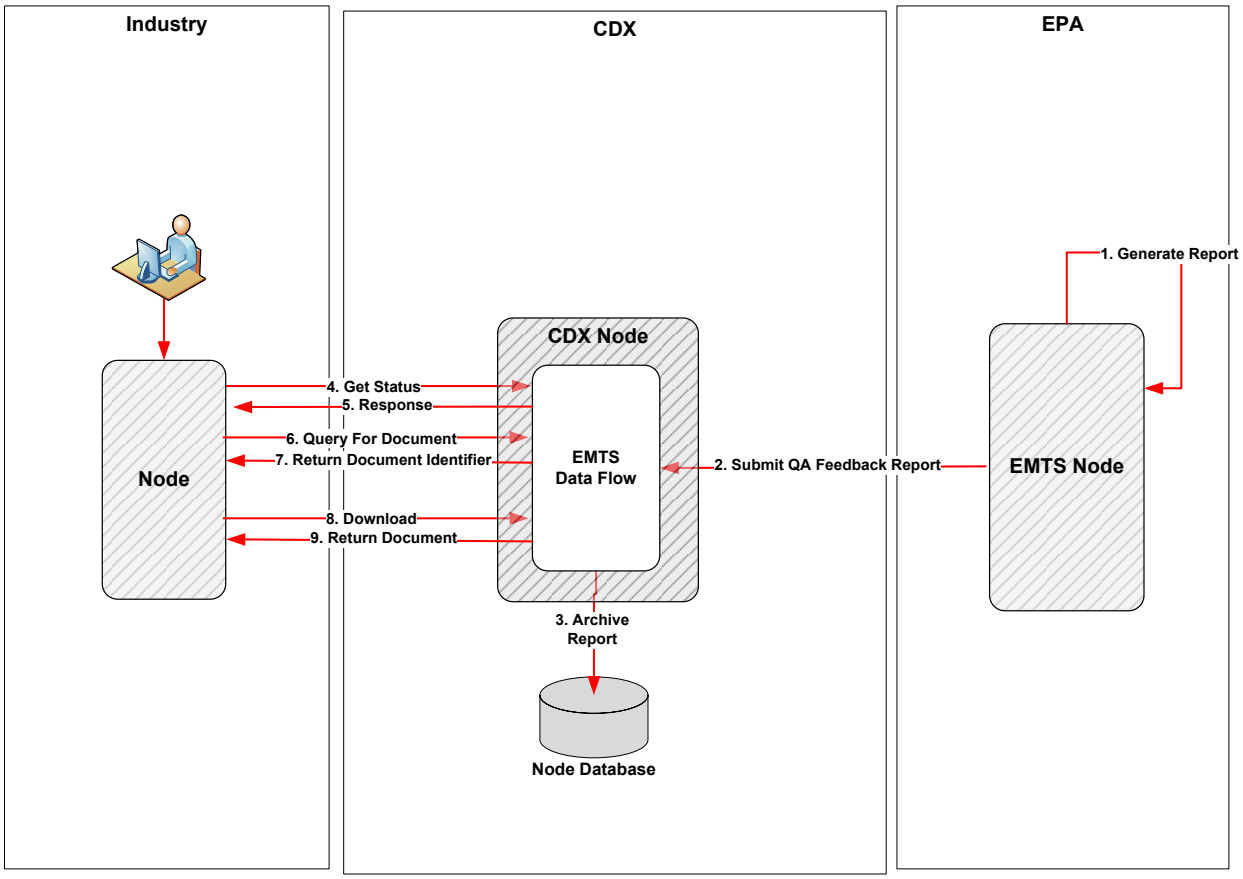

1. When a submitted file fails due to violated EMTS business rules, EMTS automatically generates a QA feedback report. QA feedback reports are generated by EMTS every 10 minutes.

2. The EMTS Node submits the QA Feedback Report to the CDX Node.

3. The CDX Node archives the report.

4. The industry node issues a GetStatus request using one of the following end-point URLs:

   Test: https://testngn.epacdxnode.net/ngn-enws20/services/NetworkNode2Service
   Prod: https://cdxnodengn.epa.gov/ngn-enws20/services/NetworkNode2Service

5. The industry node receives a response.

6. If the industry node receives the status detail value of “E_BackendProcessing” or "E_BackendXsdValidationError" as a result of the GetStatus web service method, the industry node invokes the Query web service to obtain the document ID for the QA Feedback report.

   The following parameters are used:

   - securityToken: Security token.

- dataflow: NODE
- request: GetDocuments
- parameters:

  - TransactionIdParam: Submission CDX Transaction ID
  - Category: REPORT

Note that the data flow for this service is NODE and not EMTS. This service may not return the same responses or operate the same using any other data flow name.

7. The CDX Node returns a document history XML file to the industry node. This XML will contain transaction and document information, as shown below. The industry node uses the document ID contained in the document history file to retrieve the document from the CDX Node.

```
<DocumentList xmlns="">
   <TransactionId>transaction id</TransactionId>
   <Document>
      <Id>document id</Id>
      <Name>document name</Name>
      <Category>REPORT</Category>
      <Status>FAILED</Status>
      <Type>XML/ZIP</Type>
      <CreationTime>yyyy-mm-ddThh:mm:cc</CreationTime>
      <Size>document size</Size>
      <DocumentProperties xmlns="">
           <Property>
           <Name>property name</Name>
           <Value>property value</Value>
           </Property>
      </DocumentProperties>
      </Document>
</DocumentList>
```

8. The industry node invokes the Download web service to the CDX Node.

   The following parameters are used:

   - securityToken: A security token received in authentication step.
   - dataflow: EMTS
   - transactionId: The submission CDX Transaction ID documents: An array of NodeDocumentType, which contains the following parameters:

     - documentName: Empty string
     - documentFormat: Empty string
     - documentContent: Empty string
     - documentId: document ID retrieved in Step 5 above. When the documents parameter is empty, the CDX Node will return all documents associated with the Transaction ID. When a document identifier is specified as the document's parameter, the node will return only the associated document.

9. The CDX Node retrieves the QA Feedback report from the archive using the CDX Transaction ID and document ID and returns the QA Feedback report to the industry node.

   The industry node receives and stores the QA Feedback report.

5.5 Obtain Document History

The following steps demonstrate how the industry node obtains the document history for a given submission using the Query web service method. This functionality is applicable to node and node clients.

1. The submitter logs into NAAS using his NAAS User ID. NAAS returns a security token.

2. The industry node invokes the Query web service method using one of the following end-point URLs:

   Test: https://testngn.epacdxnode.net/ngn-enws20/services/NetworkNode2Service
   Prod: https://cdxnodengn.epa.gov/ngn-enws20/services/NetworkNode2Service

   The following parameters are used:

   - securityToken: Security token returned in Step 1
   - dataflow: NODE
   - request: GetDocuments
   - parameters:

     - TransactionIdParam: Transaction ID returned by the CDX Node in Step 9 of Section 5.1.
     - Category: Document category (SUBMISSION, VALIDATION_REPORT, REPORT). When the category parameter is null the node will return all associated documents.

3. The CDX Node validates the industry node user via NAAS.

4. The CDX Node returns a SOAP fault to the industry node if validation fails.

5. The CDX Node returns the document history for a submission. The XML contains the Transaction ID and document information as shown below:

```
<DocumentList xmlns="">
    <TransactionId>transction id</TransactionId>
    <Document>
        <Id>document id</Id>
        <Name>document name</Name>
        <Category>SUBMISSION/VALIDATION_REPORT/REPORT</Category>
        <Status>PENDING/PROCESSED/COMPLETED/FAILED</Status>
        <Type>XML/ZIP</Type>
        <CreationTime> yyyy-mm-ddThh:mm:cc </CreationTime>
        <Size>document size</Size>
        <DocumentProperties xmlns="">
            <Property>
            <Name>property name</Name>
            <Value>property value</Value>
            </Property>
        </DocumentProperties>
        </Document>
</DocumentList>
```

5.6 Download Document

The following steps demonstrate how the industry node downloads a document using the Download web service method. This functionality is applicable to node and node clients.

1. The submitter logs into NAAS using his NAAS User ID. NAAS returns a security token.

2. The industry node invokes the Query web service method using one of the following end-point URLs:

   Test: https://testngn.epacdxnode.net/ngn-enws20/services/NetworkNode2Service
   Prod: https://cdxnodengn.epa.gov/ngn-enws20/services/NetworkNode2Service

   The following parameters are used:

   - securityToken: The security token received in Step 1.
   - dataflow: EMTS
   - transactionId: The CDX Transaction ID for the submission. The transaction ID must be the same Transaction ID issued by the CDX Node (see Step 8 of Section 5.1).
   - documents: An array of NodeDocumentType. When the 'documents' parameter is empty, the CDX Node returns all documents associated with the Transaction ID. When a document identifier is specified in 'documents,' the node returns the associated document.

3. The CDX Node authenticates and authorizes the industry user via NAAS.

4. If the authentication or authorization with NAAS fails, the CDX Node returns an Authentication/Authorization SOAP fault to the industry node.

5. The CDX Node returns the requested document(s).

Note that the data flow for this service is EMTS. If you use the NODE data flow for this service, you will receive a different response status and message.

6 Data Publishing

6.1 Overview

The CDX Node supports the capability for industry nodes to request and retrieve EMTS reports. The CDX Node implements the EMTS Solicit service as a part of the EMTS data flow, and makes it available to all industry nodes.

Industry users must register for the types of reports they wish to retrieve by utilizing the report subscription functionality on the EMTS website. Subscription services should be reviewed periodically and updated to reflect the industry users' needs for retrievable reports. The industry user can subscribe to several reports, each of which is described in Appendix F, "*EMTS Web Service Documents.*"

The following section describes the process for subscribing to and retrieving reports from EMTS.

Figure 7: Solicit Reports from the EMTS

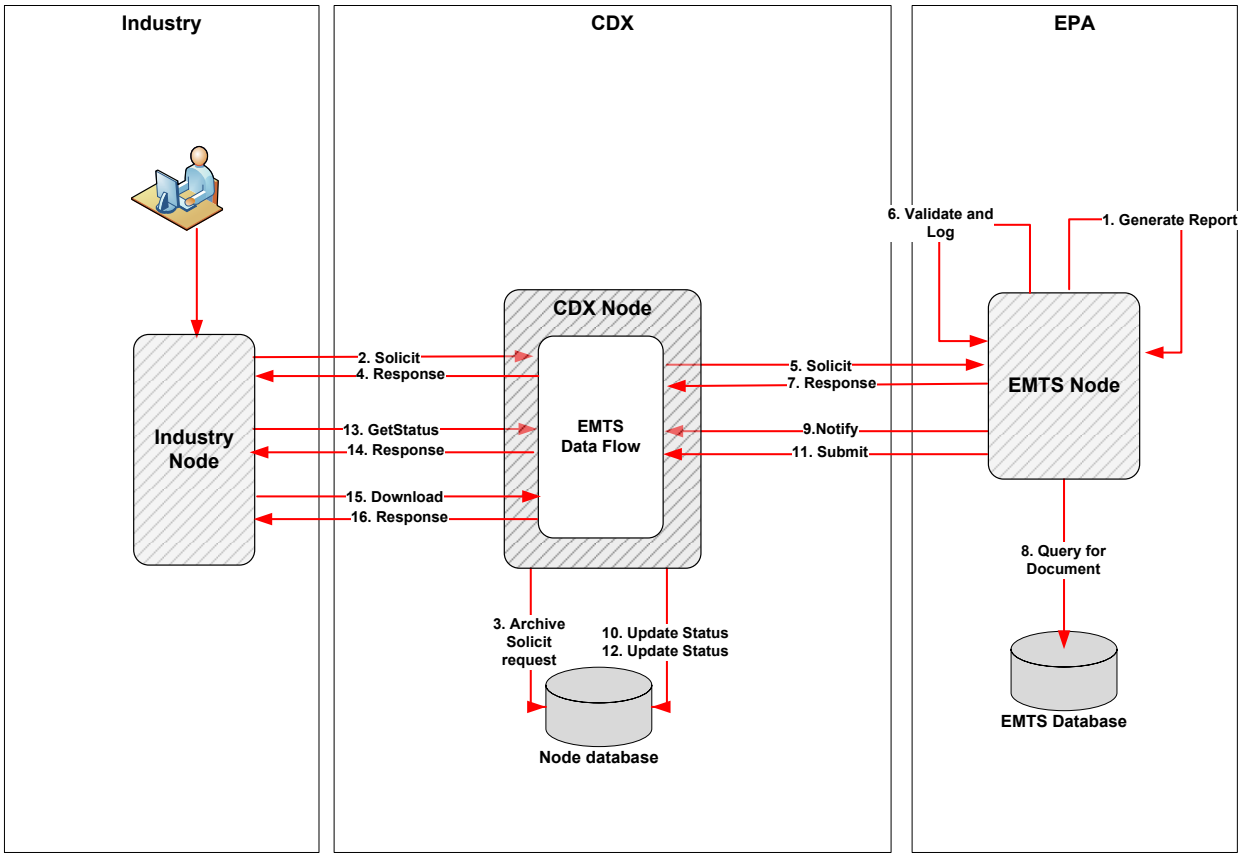

EMTS runs scheduled jobs nightly, generating reports as requested by subscribers. Generated reports are available for download from the EMTS website, or for Solicit requests from a node. The industry node invokes the Solicit web service method to the CDX Node using the procedure described in the next section. The CDX Node will archive the solicit request for asynchronous processing. The CDX Node will then send a Solicit request to the EMTS Node containing the report request information. The EMTS Node will log the Solicit request then retrieve the report that was created during the overnight scheduled job. This report is then submitted to the CDX Node. The CDX Node will archive the report and wait for a GetStatus request from the industry node. In the response, the document identifier information is provided and the industry user issues a Download request. These reports may also be retrieved manually from the EMTS website should the user not wish to use the Solicit flow services.

6.2 EMTS Solicit Flow Steps

1. EMTS creates reports in accordance with industry users' subscriptions.

2. The industry node invokes the Solicit web service method using following end-point URLs:

   Test: https://testngn.epacdxnode.net/ngn-enws20/services/NetworkNode2Service
   Prod: https://cdxnodengn.epa.gov/ngn-enws20/services/NetworkNode2Service

   The following parameters are used:

   - securityToken: The security token received from the Authentication response.

- dataflow: EMTS
- request: GetEMTSDocument
- recipient: Empty (not used)
- notificationURI: Empty (not used)
- parameters:

  - documentName: Report name (see Appendix F, "*EMTS Web Service Documents*"). This is a mandatory parameter.
  - organizationIdentifier: OTAQ Registration "Company ID" of the organization for which the report is being solicited, or the keyword "Agent" (Case insensitive) for Agent reports. This is a mandatory parameter.
  - documentDate: Creation date of the report ("YYYY-MM-DD"). This is an optional parameter. A non-specified or empty documentDate defaults to the current date.

When specifying an optional parameter, you may pass the empty parameter in one of two ways: i) No key and no value; or ii) With the key and an empty string value.

Note: The EMTS Solicit parameter names were created before the reporting capability in EMTS was fully designed and implemented. The parameter names were initially created using the term "document" as it is a common term used in the EPA Exchange Network literature. However, as the documents creation, subscription, and retrieval capability was fully developed in EMTS, the capability was renamed using the term "report." For backward compatibility with early Beta industry nodes and the corresponding implementation in the CDX Node, the EMTS Solicit parameter names were not renamed accordingly.

3. The CDX Node validates the Solicit request ensuring it contains valid and required parameters.

4. The CDX Node generates a CDX Transaction ID associated with the Solicit request. The status to set to "RECEIVED". The CDX Node returns a StatusResponse to the industry node containing the following information:

   - transactionId: CDX Solicit Transaction ID
   - status: "RECEIVED" if successful, "FAILED" if a parameter validation error occurred.
   - statusDetail: Empty

   The industry node stores the returned CDX Transaction ID for later querying of the status of the Solicit request.

The following sequence is performed asynchronously after the solicit response action in Step 4.

5. The CDX Node issues a Solicit request to the EMTS Node. As part of this solicit request, the CDX Node maps the NAAS User ID to the CDX Web User ID. If the mapping is successful, the CDX Node creates a security token that includes the submitter's Web CDX user ID, email address, and affiliation. The CDX Node issues the Solicit service using the following end-points:

   Test: https://testngn.epacdxnode.net/ngn-enws20/services/Dataflow2Service
   Prod: https://cdxnodengn.epa.gov/ngn-enws20/services/Dataflow2Service

The following parameters are used:

- securityToken: Security token with the submitter's Web CDX user ID, email address, and affiliation.
- dataflow: EMTS
- request: GetEMTSDocument
- recipient: Empty
- notificationURI: Empty
- parameters:
    - documentName: Report name (see Appendix F, "*EMTS Web Service Documents*"). This is a mandatory parameter.
    - organizationIdentifier: OTAQ Registration "Company ID" of the organization for which the report is being solicited, or the keyword "Agent" (Case insensitive) for Agent reports. This is a mandatory parameter.
    - documentDate: Creation date of the report ("YYYY-MM-DD"). This is an optional parameter. A non-specified or empty documentDate defaults to the current date.

6. The EMTS Node validates the security token and extracts the CDX Web User ID from the security token and queues the request's transaction ID and Solicit parameters for asynchronous processing by EMTS.

7. The EMTS Node returns a Solicit response to the CDX Node.

8. A periodic EMTS job de-queues the next Solicit request in a FIFO mode, and processes it. The EMTS Node either submits the document to the CDX Node, or sends a Notify to indicate failure when the Solicit request has an invalid parameter, the solicitor is not authorized to retrieve the specified document, or the solicited document is not available (e.g., has not been generated yet).

The following sequence is performed if the Solicit request results in failure.

9. If the EMTS Node sends a NOTIFY of "FAILURE", this indicates EMTS did not have a document that matched the parameters supplied in the Solicit request. The EMTS Notify response contains the following information sent to the CDX Node.

   The following parameters are used:

   - securityToken: Security token will be received from regular authenticate against CDX Node.
   - nodeAddress: Empty
   - dataflow: EMTS
   - messages: An array of notification messages consisting of one message. The message XML structure contains the following elements:
     - objectId: EMTS Solicit Transaction ID obtained in Step 7
     - messageCategory: The string "Status".
     - messageName: The string "Status Notification"
     - status: The string "Failed".
     - statusDetail: EMTS processing failure reason as shown in the table below. *Note:* The "<solicit parameter name>" notation represents the value of a solicit parameter, which is dynamically inserted in the status detail string.

Table 7: Notify Failure Processing Reason

E_EmtsUser: The CDX Web User ID <cdxWebId> is not a valid EMTS user ID.
E_Affiliation: The EMTS user <cdxWebId> is not affiliated with the organization <organizationIdentifier>.
E_AgentAffiliation: The EMTS user <cdxWebId> has not enabled agent affiliations.
E_Organization: The organization ID < organizationIdentifier> was not found.
E_DocumentName: No document name was passed in the Solicit request.
E_DocumentName: The requested document name <documentName> is invalid.
E_AgentDocumentName: The requested document name <documentName> is not an agent document.
E_Date: The date in the request is in an invalid format.
E_OrganizationDocumentSubscription: The organization <organizationIdentifier> is currently not subscribing to document <documentName>.
E_IndividualDocumentSubscription: The EMTS user <cdxWebId> is currently not subscribing to agent document <documentName>
E_NoOrganizationSubscribed: The EMTS user <cdxWebId> has no organization currently subscribing to document <documentName> and frequency <frequency>
E_DocumentNotAvailable: The requested document <documentName> for organization <organizationIdentifier> and date <documentDate> is currently not available.
E_DocumentNotAvailable: The requested individual <cdxWebId> document <documentName> and date <date> is currently not available.

10. The CDX Node extracts the EMTS Solicit Transaction ID from the set of passed parameters and retrieves the CDX Node Solicit transaction. The CDX Node updates the status details of the transaction.

The following sequence is performed if the Solicit request results in success.

11. EMTS submits the requested document to the CDX Node using the following end-point URLs:

    Test: https://testngn.epacdxnode.net/ngn-enws20/services/Dataflow2Service
    Prod: https://cdxnodengn.epa.gov/ngn-enws20/services/Dataflow2Service

The EMTS Node passes the following parameters:

- securityToken: Security token received in Step 2.
- transactionId: Solicit Transaction ID provided by the CDX Node in Step 6.
- dataflow: “EMTS”
- flowOperation: “solicitResponse”
- recipient: Empty
- notification: Empty
- documents: One document containing a zipped document.

12. The CDX Node receives the document and extracts the EMTS Solicit Transaction ID from the parameter list. The CDX Node associates the transaction related to the EMTS Solicit transaction and sets the CDX transaction status to “COMPLETED”.

The following sequence is performed at the CDX Node after the response from the industry node Solicit request.

13. The industry node issues a GetStatus request to the CDX Node using the following end-point URLs:

    Test: https://testngn.epacdxnode.net/ngn-enws20/services/NetworkNode2Service
    Prod: https://cdxnodengn.epa.gov/ngn-enws20/services/NetworkNode2Service

    The following parameters are used:

    - securityToken: Security token returned during authentication.
    - transactionId: CDX Solicit Transaction ID obtained in Step 4.

14. The CDX Node validates the user via NAAS. If the user is validated, the CDX Node returns a StatusResponse containing the status information using the following parameters:

    - transactionId: Passed Transaction ID.
    - status: One of the following statuses:

        - RECEIVED: Solicit request was successfully received, however the request to EMTS Node has not been sent yet.
        - PENDING: The solicit request was successfully sent to EMTS.
        - COMPLETED: The EMTS Node has processed the request and the document is available for download.
        - FAILED: The process failed.

    - statusDetail: One of the error messages shown below.

statusDetail Prefix	Description	Initiated By
E_ApplicationIdMapping	CDX is unable to find the CDX Web User Identification based on the provided NAAS Identification.	CDX
E_Solicit	The CDX Node was unable to issue the Solicit to EMTS.	CDX
E_EmtsUser	The solicitor's user id does not exist.	EMTS
E_Affiliation	The solicitor is not affiliated with the specified organization.	EMTS
E_AgentAffiliation	The user has no agent affiliation that is currently enabled.	EMTS
E_Organization	The specified organization does not exist.	EMTS
E_DocumentName	No document name was passed in the Solicit request, or the solicited document name does not exist.	EMTS
E_AgentDocumentName	The solicited document name is not an agent document.	EMTS
E_Date	The specified document date format is invalid.	EMTS
E_OrganizationDocumentSubscription	The soliciting organization is currently not subscribing to the solicited document.	EMTS
E_IndividualDocumentSubscription	The user is currently not subscribing to the solicited agent document.	EMTS
E_NoOrganizationSubscribed	The solicitor has no organization currently subscribing to the solicited document and frequency.	EMTS
E_DocumentNotAvailable	The solicited document has not been generated, or does not exist..	EMTS

15. If the transaction status is “COMPLETED”, the industry node invokes the Download web service method using following end-point URLs:

    Test: https://testngn.epacdxnode.net/ngn-enws20/services/NetworkNode2Service
    Prod: https://cdxnodengn.epa.gov/ngn-enws20/services/NetworkNode2Service

    The following parameters are used:

    - securityToken: A security token
    - dataflow: “EMTS”
    - transactionId: The Solicit Transaction ID. It must be the transaction ID issued by the CDX node in the Solicit response.
    - documents: Empty

16. The CDX Node returns the document to the industry node.

7 EMTS Archive Flow

7.1 Overview

In order to archive EMTS transactions performed by industry users from the EMTS website, EMTS periodically submits EMTS schema-based XML documents to the CDX Node that contain these EMTS transactions. The archiving frequency is every hour. Industry nodes may retrieve archived Web-based EMTS transactions using the Query and Download web services. As the Web submitter's identity (CDX Web User ID) is communicated in the archive flow to the CDX Node via the NAAS token, the CDX Node authenticates and authorizes archived EMTS transactions retrievals.

The flow described in Section 7.2 is used by the EMTS Node only. Industry users that wish to retrieve archived documents from the CDX Node should use the query and download services described in Section 7.3.

7.2 Archive Submission

1. The EMTS Node issues the CreateSecurityToken web service using following end-point URLs:

   Test: https://naas.epacdxnode.net/xml/securityToken_v30.wsdl
   Prod: https://cdxnodenaas.epa.gov/xml/securityToken_v30.wsdl

   The following parameters are passed:

   - trustee: EMTS Node administrator's NAAS ID.
   - credential: EMTS Node administrator's NAAS password.
   - tokenType: “csm”
   - issuer: “CDX-Web RSO”
   - authMethod: “password”
   - subject: EMTS Node operator's NAAS ID.
   - subjectData: URL-encoded key value pairs consisting of:

     - cdxWebId=Web submitter's CDX Web User ID
     - cdxWebAffiliation=“CDX”
     - cdxWebEmail=Web submitter's email address

   - ip: EMTS Node's IP address.

2. EMTS submits a zipped document to the CDX Node using the following end-point URLs:

   Test: https://testngn.epacdxnode.net/ngn-enws20/services/WebIntegrationService
   Prod: https://cdxnodengn.epa.gov/ngn-enws20/services/WebIntegrationService,

   The following parameters are used:

   - securityToken: Security token received in Step 1.
   - transactionId: Empty (not used)
   - dataflow: “EMTS-ARCHIVE”
   - flowOperation: Empty (not used)
   - recipient: Empty (not used)

- notificationURI: Empty (not used)
- Documents: One document containing zipped EMTS XML document.

3. The CDX Node validates the security token via NAAS. This authenticates and authorizes EMTS to archive.

4. The CDX Node validates the payload. The submission payload can contain only one document which must be compressed and be a .ZIP document type.

5. The CDX Node archives the submitted document.

6. The CDX Node generates a CDX Transaction ID and assigns it the status of "COMPLETED". The submission CDX Transaction ID identifies the submission, and can be used later by EMTS to check the status of the submission, obtain transaction history, and download the document.

7. The CDX Node archives the CDX Web User ID, email, and affiliation in association with the CDX Transaction ID.

8. If successful, the CDX Node returns the following Submit response to the EMTS Node:

   - transactionId: The CDX Transaction ID.
   - status: COMPLETED
   - statusDetails: The submission has been accepted and can be tracked using the CDX Transaction ID.

9. If failed, the CDX Node returns a SOAP Fault to the EMTS Node.

10. EMTS Node archives returned transaction for further processing.

7.3 EMTS-ARCHIVE Flow

The following steps demonstrate how the industry node obtains the document IDs of archived files for a specified user using the Query web service method. A document ID is then used to download it from CDX.

1. Industry Node invokes the Query web service method using the following end-point URLs:

   Test: https://testngn.epacdxnode.net/ngn-enws20/services/NetworkNode2Service
   Prod: https://cdxnodengn.epa.gov/ngn-enws20/services/NetworkNode2Service

   The following parameters are used:

   - security Token: The security token received in authentication.
   - dataflow: NODE
   - request: GetTransactions
   - parameters:

     - dataflow: "EMTS-ARCHIVE"
     - status: COMPLETED
     - startDate: The start date requested ("YYYY-MM-DD"). If a date is not specified, all transactions are returned.
     - endDate: The end date requested ("YYYY-MM-DD"). If a date is not specified, all transactions are returned.
     - user: CDX Web User ID

2. The CDX Node validates the Industry Node user via NAAS.

3. The CDX Node returns a SOAP Fault to the Industry Node if validation fails.

4. The CDX Node returns a transaction history XML to the Industry Node in the following format:

```
<TransactionList xmlns="">
   <Transaction xmlns="">
         <Id>_8208d68b-972f-4183-af35-82b3224deceb</Id>
         <CreationTime>2009-12-17T10:10:58</CreationTime>
         <Status>COMPLETED</Status>
         <Dataflow>EMTS-ARCHIVE</Dataflow>
      </Transaction>
   <Transaction xmlns="">
         <Id>_91a30409-6c4c-4ead-8b0f-79d4c80c9274</Id>
         <CreationTime>2009-12-16T21:10:35</CreationTime>
         <Status>FAILED/COMPLETED</Status>
         <Dataflow> EMTS-ARCHIVE </Dataflow>
      </Transaction>
   <Transaction xmlns="">
         <Id>_79b2f0a9-ba83-4cd2-84ad-27d7389104f6</Id>
         <CreationTime>2009-12-04T11:45:38</CreationTime>
         <Status>COMPLETED</Status>
         <Dataflow>EMTS-ARCHIVE</Dataflow>
      </Transaction>
</TransactionList>
```

7.4 Download Archived Documents

The following steps demonstrate how the industry node downloads archived documents using the download web service method.

1. The industry node invokes the Download web service method using the following end-point URLs:

   Test: https://testngn.epacdxnode.net/ngn-enws20/services/Dataflow2Service
   Prod: https://cdxnodengn.epa.gov/ngn-enws20/services/Dataflow2Service

   The following parameters are used:

   - securityToken: A security token received in authentication.
   - dataflow: EMTS-ARCHIVE
   - transactionId: An EMTS-ARCHIVE submission's CDX Transaction ID It is the CDX Transaction ID returned in the submit response of the EMTS-ARCHIVE submission flow (see Step 8 of Section 7.2).
   - documents: Empty (not used)

2. The CDX Node validates the user via NAAS.

3. The CDX Node returns a SOAP fault to industry node if validation fails.

4. The CDX Node returns the requested document to the industry node.

8 Web Service Methods

The following section describes the web service methods utilized by an Exchange Network 2.0 node to participate in the EMTS flow.

Please see the Exchange Network 2.0 functional specifications for detailed information of web services. WSDL's for these web service methods can be obtained at:

http://exchangenetwork.net/schema/node/2/node_v20.wsdl

8.1 Authenticate

The Authenticate method is used to obtain a security token from the CDX Node. This token is passed in any subsequent method calls in the exchange between the submitting node and the CDX Node.

The following URLs may be used:

Test: https://testngn.epacdxnode.net/ngn-enws20/services/NetworkNode2Service
Prod: https://cdxnodengn.epa.gov/ngn-enws20/services/NetworkNode2Service

Authenticate Parameters:

- userId: The submitter's NAAS User ID
- credential: The submitter's NAAS password
- domain: "Default"
- authenticationMethod: "Password"

Returns:

- securityToken: A security token used to authenticate and authorize the submitter.

8.2 Submit

The Submit method is used to submit an XML file to EMTS.

The following URLs may be used:

Test: https://testngn.epacdxnode.net/ngn-enws20/services/NetworkNode2Service
Prod: https://cdxnodengn.epa.gov/ngn-enws20/services/NetworkNode2Service

Submit Parameters:

- securityToken: The security token issued by NAAS and returned from the Authenticate method. This security token can be used for several submissions as long as the token has not expired.

- transactionId: Empty (The transaction ID is returned by CDX in the submit response).
- dataflow: EMTS
- flowOperation: Empty (not used)
- recipient: Empty (not used)
- notificationURI: Empty (not used)
- documents: An array of type nodeDocument. Each nodeDocument structure contains a single submission file. EMTS requires a single nodeDocument.

Returns:

A Submit response with the following data:

- transactionId: The submission's unique CDX Transaction ID.
- status: Text describing the submission's status (“Received” or “Failed”).
- statusDetail: Additional details regarding the submission.

8.3 GetStatus

The GetStatus method is used to obtain the transaction status of a submission.

The following URLs may be used:

Test: https://testngn.epacdxnode.net/ngn-enws20/services/NetworkNode2Service
Prod: https://cdxnodengn.epa.gov/ngn-enws20/services/NetworkNode2Service

GetStatus Parameters:

- securityToken: The security token issued by NAAS and returned from the Authenticate method.
- transactionId: The Transaction ID issued by the CDX Node from the Submit or Solicit service.

Returns:

A GetStatus response with the following data:

- statusResponseType containing following information:
  - transactionId: The Transaction ID issued by the CDX Node from the Submit service.
  - status: Text describing the submission's status (“Received”, or “Failed”).
  - statusDetail: Additional details on the Status description shown in the table below.

Table 5: Status Detail Codes and Descriptions

Status Details Prefix	Description
E_ApplicationIdMapping	CDX is unable to find a CDX Web User identification based on the NAAS identification.
E_OtaqRegNotRegistered	The CDX was unable to verify that the submitter is a registered user in the OTAQ Registration database.

Status Details Prefix	Description
E_OtaqRegNotApproved	The CDX was unable to verify that the submitter is activated in the OTAQ Registration database.
E_Distribution	The CDX Node was unable to distribute the document to EMTS.
E_BackendXsdValidationError	The submitted document does not conform to the EMTS XSD 3.0 schema.
E_BackendProcessing	The Document failed processing in EMTS.

8.4 Query

The Query method is used to obtain transaction and document history.

The following URLs may be used:

Test: https://testngn.epacdxnode.net/ngn-enws20/services/NetworkNode2Service
Prod: https://cdxnodengn.epa.gov/ngn-enws20/services/NetworkNode2Service

Query Parameters:

- securityToken: The security token issued by NAAS and returned from the Authenticate method.
- dataflow: NODE
- request: GetTransactionHistoryByTransactionId/GetDocuments.
- parameters: See Sections 5.4 and 5.5 for parameters.

Returns:

The XML representing transaction or document history. See Sections 5.4 and 5.5 for details.

8.5 Solicit

The Solicit method is used to request EMTS documents.

The following URLs may be used:

Test: https://testngn.epacdxnode.net/ngn-enws20/services/NetworkNode2Service
Prod: https://cdxnodengn.epa.gov/ngn-enws20/services/NetworkNode2Service

Solicit Parameters:

- securityToken: The security token issued by NAAS and returned from the Authenticate method.
- dataflow: EMTS
- request: GetEMTSDocument
- recipient: Empty (not used)
- notificationURI: Empty (not used)
- parameters:

- documentName: Report name (see Appendix F, "*EMTS Web Service Documents*"). This is a mandatory parameter.
- organizationIdentifier: OTAQ Registration "Company ID" of the organization on behalf of whom the report is being solicited. This is a mandatory parameter.
- documentDate: Creation date of the report ("YYYY-MM-DD"). A non-specified or empty documentDate defaults to the current date.

Returns:

The CDX Node returns a StatusResponseType to the node containing the following information:

- transactionId: CDX Solicit Transaction ID.
- status: "RECEIVED" if successful, "FAILED" if an error occurred.
- statusDetail: Empty

8.6 Download

The Download method is used to download documents. The following documents can be downloaded:

- Original submission● QA Feedback report
- Web Service documents
- Archived XML files

The following URLs may be used:

Test: https://testngn.epacdxnode.net/ngn-enws20/services/NetworkNode2Service
Prod: https://cdxnodengn.epa.gov/ngn-enws20/services/NetworkNode2Service

Download Parameters:

- securityToken: The security token issued by NAAS and returned from the Authenticate method.
- dataflow: EMTS or EMTS-ARCHIVE
- transactionId: The Transaction ID issued by the CDX Node from the Submit or Solicit service.
- documents: An array of NodeDocumentType. When the documents parameter is empty, the CDX Node will return all documents associated with the Transaction ID. When a Document ID is specified in the documents parameter, the Node will return only the associated document.

Returns:

A message contains an array of zero or more NodeDocumentType.

Appendix A

Node Options

There are several options for how to submit an XML file to EMTS through the EPA Exchange Network.

Exchange Network ("Full") Node: A server that facilitates the interface between an EMTS participant's – or partner's -- backend system and the EPA Exchange Network. It is a partner's "point of presence" on the Exchange Network. Each partner has only one node. Nodes support:

- Server accessibility on the Web;
- Protocols to ensure secure exchanges;
- Sending and receiving standards-based messages; and
- Returning requested information as XML.

Exchange Network Web Client: EPA's EMTS website for submitting environmental information via standard web browsers. The web client supports:

- Users to submit data via web-based forms and file uploads (flat file, XML file);
- Users to receive submission confirmation and processing reports;
- XML for the payload;
- Simple Object Access Protocol (SOAP) as a wrapper for the payload;
- Web Services Description Language (WSDL) for network exchange functions and services; and
- Hypertext Transfer Protocol (HTTP) for secure communication via the Internet.

EMTS Web Client: The EMTS website also provides a node client interface that allows an EMTS end-user to submit EMTS XML files to CDX. The EMTS Web node interface supports:

- Submission of data via file uploads (XML file only);
- History of submitted files.

Appendix B

OTAQ Registration Process

This section describes the business processes for obtaining a CDX and NAAS account and the permissions to participate in the EMTS flow.

B–1 New User Registration

The following procedures are for all new users that are currently not registered with CDX.

All users must register for a CDX Web account by self-registering at https://cdx.epa.gov

Once a CDX Web account is acquired, the user must login to MyCDX. The user is prompted to register for one or more programs. To register for EMTS:

- Click “Edit Current Account Profile.”
- Click “Add New Program.”
- Select “Office of Transportation and Air Quality EPA Moderated Transaction System (OTAQEMTS).”
- On the “Add Program ID” screen, type “N/A” into the ID field and click Add.
- Click Finished.
- Print appropriate document prior to submitting registration information and mail the document to the address provided on the screen.
- EPA will review and activate the registration.
- User requests registration with NAAS (see Section B-2).
- Once activated, the user receives permissions to submit documents to the EMTS flow and access the EMTS website.

B–2 Node Client Registration

EMTS users who plan to use Node clients to submit files must be affiliated with the CDX Node “EMTS” domain. These users are registered and managed by the CDX Node Administrator. For example, the CDX Node Administrator performs the following functions from a NAAS Web interface: i) Setting access rights to the EMTS flow; and ii) Mapping between the EMTS user's Web CDX user ID and NAAS User ID .

The following registration procedure is required for all users who are not registered with CDX, or are registered with CDX for programs other than the EMTS/OTAQ REG flows and do not have NAAS IDs:

1. Register with CDX Web for the EMTS flow (see Section B-1). The user will be automatically registered for the OTAQ Registration flow.

2. Enter all necessary information into OTAQ Registration application.

3. EPA reviews and activates the user.

4. Test the Node Client in the EMTS Test system (see Appendix C for details).

5. Once the Node Client has been tested, request the Node Administrator to register with NAAS and request privileges for accessing the EMTS flow and user mapping between the NAAS and CDX Web User ID's. Provide the following information to the Node Administrator:

   - Email address to receive communications from the EMTS flow associated with the user NAAS ID.
   - EMTS Web CDX user ID.
   - Application: EMTS

6. The CDX Node Administrator will register the user with NAAS. This includes:

   - Creating the NAAS User ID using email provided by the user.
   - Activating the user.
   - Setting privileges for the user to be able to:

     - Submit EMTS data; and
     - Get EMTS transaction status.

   - Query the CDX Node for the following:

     - flow: “NODE”
     - services: GetTransactionHistoryByTransactionId and GetDocuments
     - parameters: Any
     - download: EMTS documents.

   - Map the NAAS User ID to CDX Web User ID for the EMTS Application using NAAS application mapping UI.
   - Send confirmation email to the user.

For users already registered with CDX Web for the EMTS flow and who do not have NAAS User IDs, see Section 4.4. For all users registered with CDX Web for the EMTS flow with existing NAAS User IDs, see Sections 4.5.3 through 4.5.5.

B–3 Full Node Registration

Full node users must be registered by the CDX Node Administrator. Setting access privileges for EMTS and mapping NAAS User ID and CDX web user ID is managed by the CDX Node Administrator.

The following procedures demonstrate how all users who are not registered with CDX or are registered with CDX for flows other than EMTS/OTAQ REG and do not have NAAS EMTS user ID should proceed.

1. Register with CDX for the EMTS flow (see Section B-1). The user will be automatically registered for the OTAQ Registration flow.

2. Enter all necessary information into OTAQ Registration application.

2. EPA reviews and activates the user.

4. Test the Node Client in the EMTS Test system (see Appendix C for details).

5. Once the Node has been tested, request the Node Administrator to register with NAAS and request privileges for accessing EMTS flow and user mapping between the NAAS and CDX Web User ID's. The user must provide the following information to the Node Administrator:

   - Email address to receive communications from the EMTS flow associated with the user NAAS ID;
   - EMTS Web CDX user ID; and
   - Identify the application as EMTS.

6. The CDX Node Administrator will register the user with NAAS. This includes:

   - Creating the NAAS User ID using email provided by the user.
   - Activating the user.
   - Setting privileges for the user to be able to:

     - Submit EMTS data.
     - Get EMTS transaction status.
     - Query the CDX Node for the following:

       - flow: NODE
       - services: GetTransactionHistoryByTransactionId/GetDocuments
       - parameters: Any
       - download: EMTS documents.

   - Map the NAAS User ID to CDX Web User ID for the EMTS Application using NAAS application mapping UI.
   - Send confirmation email to the user.

For all the users already registered with CDX Web for EMTS Flow and does not have NAAS User IDs, see Section 4.4. For all the users registered with CDX Web for the EMTS Flow with existing NAAS User IDs, see Sections 4.5.3 through 4.8.

B–4 NAAS User Revocation

If a user is deactivated from OTAQ Registration application, the user's privileges to access EMTS flow are also revoked. The following describes the steps taken to revoke a user's privileges.

1. EPA will send the CDX Node Administrator an email to revoke user privileges and provide the user NAAS User ID.

2. The CDX Node Administrator will revoke the following user privileges:

   - Submit EMTS data.
   - Get EMTS transaction status.
   - Query the CDX Node for the following:

     - flow: NODE
     - services: GetTransactionHistoryByTransactionId/GetDocuments
     - parameters: Any
     - download: EMTS documents.

3. The CDX Node Administrator will email EPA upon completion of revocation.

Appendix C

C-1 Procedure for Testing a Node in the Testing Environment

The following steps describe how a user should test a node in the testing environment.

1. Contact EMTS Support at support@epamts-support.com and request testing access. You will be required to submit a test plan documenting how you plan to perform testing, which should replicate your production activity. EMTS Support will then issue a pre-production NAAS ID, which is a temporary NAAS ID to test the EMTS Data Flow web services.

2. You will be provided with test organization and facility registered data that you will use to create your test XML files for your file submission testing in the test environment. Do not submit any other XML files in the test environment as the files provided have test CDX web users specifically mapped to the test NAAS ID you have been provided.

3. Contact EMTS support when you have completed testing in accordance with the test plan. EMTS Support will verify that the test activity was performed as planned.

4. Upon successful completion, EMTS Support will direct you to the CDX Node Help Desk with instructions for setting up production NAAS credentials.

5. Request that a production NAAS ID be created and mapped to your production CDX account. Your production CDX account must also be registered and activated in OTAQREG prior to providing this information (see Appendix B for further information on the OTAQ Registration process). Provide your production CDX account ID to the CDX Node Help Desk so that they may cross-map these two accounts.

6. Request that the prod NAAS ID have all access privileges (Submit, GetStatus, Solicit, Query, and Download) for the EMTS Data Flow.

7. The CDX Node Help Desk will provide you a production NAAS ID.

Appendix D

Accessing EMTS from MyCDX Web

This section describes how users access the EMTS website from MyCDX Web. Users may only access EMTS through a registered account profile. An example of an account profile with access to EMTS is shown below in Figure D-1 using the "TEST" MyCDX environment.

Figure D-1: MyCDX Account Profile

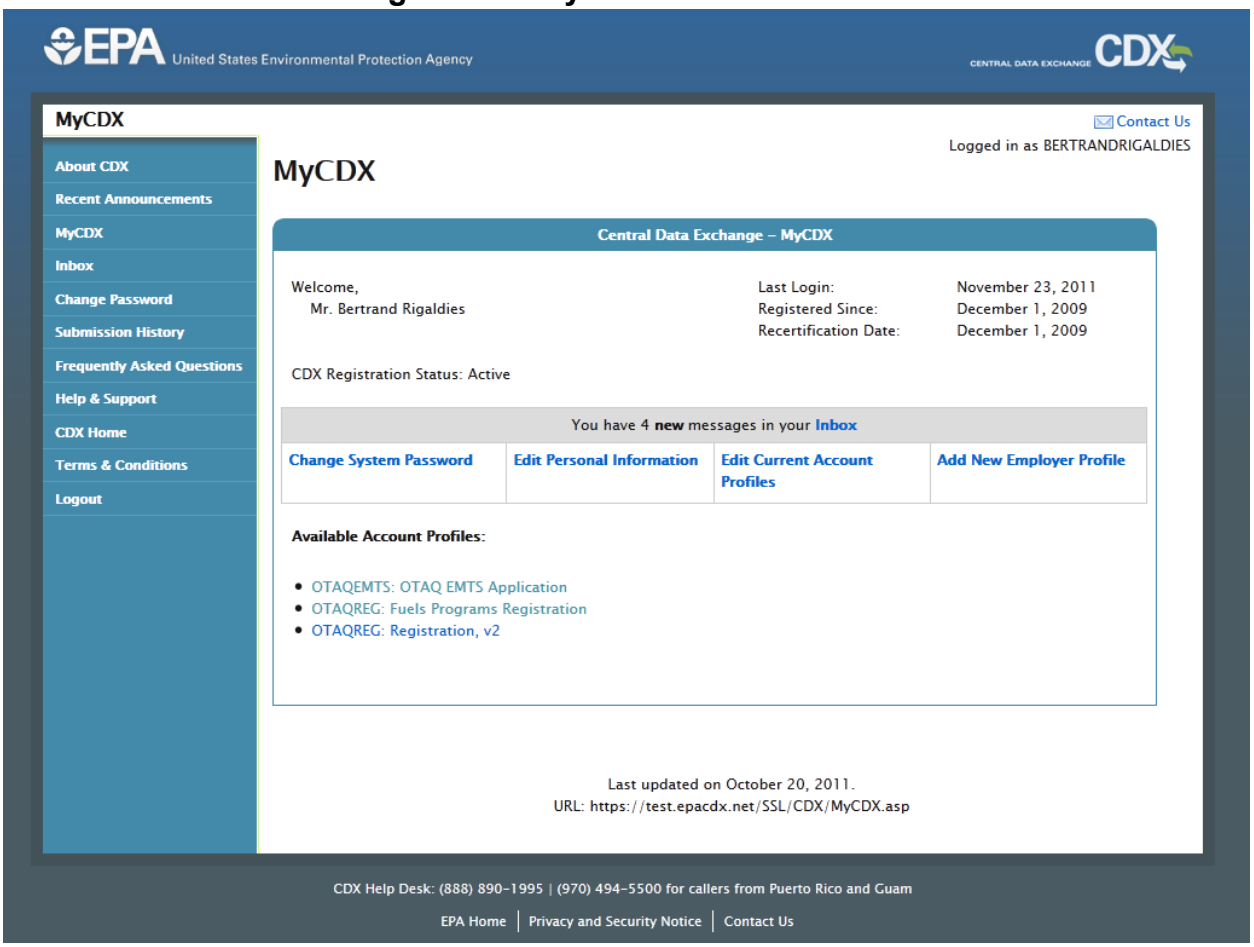

All users that have registered for EMTS and Fuels Programs Registration, and have been activated by EPA to participate in the EMTS flow, can access the EMTS website through the “OTAQEMTS: OTAQ EMTS Application” link. Delays may occur for new users waiting for approval of their registration materials by EPA.

Appendix E

Notifications for EMTS Flow

The following table outlines the notifications that are sent from either the CDX Node or EMTS to the submitter.

The "ID" column is for EPA internal use only.

Table E-1: Emails Sent Regarding File Submission Status

Sender	EPA Program	Recipient(s)	Notification Subject Line	Content	ID
CDX	RFS and Fuels ABT	Submitter, CDX Help Desk	CDX Node Failure to Distribute Document to EMTS.	CDX Node failed to distribute the following document to EMTS. EMTS submission with transaction ID of: <cdx transaction ID> On: <DEV/TEST/PROD> Submission time: <mm/dd/yyyy hh:mm:ss> Document name: <Document Name> Submitter NAAS User ID: <NAAS user ID> Submitter CDX Web User ID: <CDX Web user ID> Submission status: FAILED. CDX Node may be experiencing some technical difficulties. Please resubmit your document at a later time. Contact the CDX Help Desk at <CDX email> if the problem persists.	n/a

(cont.)

Table E-1: Emails Sent Regarding File Submission Status (cont.)

Sender	EPA Program	Recipient	Notification Subject Line	Content	ID
CDX	RFS and Fuels ABT	Submitter	CDX is unable to Find CDX Web User Identification based on NAAS Identification.	CDX Node was unable to map NAAS User ID <NAAS user ID> to CDX Web User ID. EMTS submission with transaction ID of: <cdx transaction ID> On: <DEV/TEST/PROD> Submission time: <mm/dd/yyyy hh:mm:ss> Submitter NAAS User ID: <NAAS user ID> Submitter CDX Web User ID: <unknown> Submission status: FAILED. Please contact the CDX Node help desk at <CDX Node email> to verify that your NAAS account has been completed properly.	n/a

(cont.)

Table E-1: Emails Sent Regarding File Submission Status (cont.)

Sender	EPA Program	Recipient	Notification Subject Line	Content	ID
CDX	RFS and Fuels ABT	Submitter	CDX was unable to verify that the submitter is a registered user in OTAQReg.	CDX is unable to verify that you are a registered user in the OTAQ Registration system with permission to submit documents to EMTS. EMTS submission with transaction ID of: <cdx transaction ID> Document: <Document Name> Submission time: <mm/dd/yyyy hh:mm:ss> Submitter NAAS User ID: <NAAS user ID> Submitter CDX Web User ID: <CDX Web user ID> Submission status: FAILED Please contact the OTAQ Registration Help desk at <OTAQReg Help email> for assistance.	n/a
CDX	RFS and Fuels ABT	Submitter	CDX Node has completed transaction.	EMTS submission of: <cdx transaction ID> Document: <Document Name> Submission time: <mm/dd/yyyy hh:mm:ss> Submitter NAAS User ID: <NAAS user ID> Submitter CDX Web User ID: <CDX Web user ID> Submission status: COMPLETED/FAILED You will receive additional email from EMTS containing additional information regarding your submission document.	n/a

(cont.)

Table E-1: Emails Sent Regarding File Submission Status (cont.)

Sender	EPA Program	Recipient	Notification Subject Line	Content	ID
EMTS	RFS and Fuels ABT	All Submitters with an Organization	EMTS Processing Failure	The following document submitted on <date> on behalf of <organization> could not be processed due to one or more critical errors. Information regarding the document is shown below. File name: <file name > Submission Date/Time: <Submission date/time> Submitter: <user name> Additional information regarding your submission is provided below. Submission Comment: <SubmittalCommentText> For additional support regarding EMTS, please contact <contact_email> or <contact_phone_number> . The following individuals were sent a copy of this notification: <user name> <user name>	70

(cont.)

Table E-1: Emails Sent Regarding File Submission Status (cont.)

Sender	EPA Program	Recipient	Notification Subject Line	Content	ID
EMTS	RFS and Fuels ABT	All Submitters with an Organization	EMTS Daily Processed Document Summary	The following documents submitted on <date> on behalf of <organization> have been processed. File name: <file name> Submission Date/Time: <Submission date/time> Submitter: <submitter> Submission Status: <Submission Status> Submission Comment: <SubmissionCommentTe xt File name: <file name> Submission Date/Time: <Submission date/time> Submitter: <submitter> Submission Status: <Submission Status> Submission Comment: <SubmissionCommentTe xt> {Show only if SubmissionCommentText is not null} For additional support regarding EMTS, please contact <contact_email> or <contact_phone_number> The following individuals were sent a copy of this notification: <user name> <user name>	80

(cont.)

Table E-1: Emails Sent Regarding File Submission Status (cont.)

Sender	EPA Program	Recipient	Notification Subject Line	Content	ID
EMTS	RFS and Fuels ABT	All Submitters within an Organization	EMTS Notification of Pending Trades	Your organization, <organization>, has been identified as a trading partner for <pending trades count> trades. Please accept or deny trades before <date>. For additional support regarding EMTS, please contact <contact_email> or <contact_phone_number> . The following individuals were sent a copy of this notification: <user name> <user name>	90

(cont.)

Table E-1: Emails Sent Regarding File Submission Status (cont.)

Sender	EPA Program	Recipient	Notification Subject Line	Content	ID
EMTS	RFS and Fuels ABT	All Submitters with an Organization and all submitters with the Trading Partner	Blocked Party - Trade Not Processed	The following trade has not been processed. The RINs identified in this trade originated from a source that is on the blocked list for <trading partner>. Submission Date: <Submission date/time> For additional support regarding EMTS, please contact <contact_email> or <contact_phone_number> The following individuals were sent a copy of this notification: <selling organization> <user name> <user name> <user name> <buying organization> <user name> <user name> <user name>	100

(cont.)

Table E-1: Emails Sent Regarding File Submission Status (cont.)

Sender	EPA Program	Recipient	Notification Subject Line	Content	ID
EMTS	RFS and Fuels ABT	All Submitters associated with an Organization	Blocked Party - Partner's Trade Not Processed	The following trade has not been processed. The RINS identified in this trade originated from a source that is on the blocked list for <Transaction Partner's Name> (<Transaction Partner's organization's company ID>).	180

(cont.)

Table E-1: Emails Sent Regarding File Submission Status (cont.)

Sender	EPA Program	Recipient	Notification Subject Line	Content	ID
EMTS	RFS and Fuels ABT	All Submitters associated with an Organization	EMTS Submission Level Failure	The following document submitted on <date> on behalf of <organization> could not be processed due to one or more critical errors that were identified in the submission information. Due to these errors, no transactions in the file were processed. File name: <file name> Submission Date/Time: <Submission date/time> Submitter: <submitter> Submission Status: <Submission Status> Additional information regarding your submission is provided below. Submission Comment: <SubmissionCommentTe xt> {Show only if SubmissionCommentText is not null} QA Check ID:<QA Check ID> Issue: <QA Check Message> QA Check ID:<QA Check ID> Issue: <QA Check Message> For additional support regarding EMTS, please contact <contact_email> or <contact_phone_number> .	110

				The following individuals were sent a copy of this notification: <user name> <user name> <user name>	
EMTS	RFS	All Submitters within an Organization	EMTS Notification of Locked RINs	RINS held by <organization> have recently been locked by EPA. For more information regarding your RIN Holdings and the status of RIN batches, please visit the EMTS website. For additional support regarding EMTS, please contact <contact_email> or <contact_phone_number> . The following individuals were sent a copy of this notification: <user name> <user name> <user name>	320

(cont.)

Table E-1: Emails Sent Regarding File Submission Status (cont.)

Sender	EPA Program	Recipient	Notification Subject Line	Content	ID
EMTS	RFS	All Submitters within an Organization	EMTS Notification of Unlocked RINs	RINS held by <organization name> (<organization's company id>) have recently been unlocked by EPA. For more information regarding your RIN Holdings and the status of RIN batches, please visit the EMTS web site. For additional support regarding EMTS, please contact <contact_email> or <contact_phone_number> . The following individuals were sent a copy of this notification: <user name> <user name> <user name>	400

(cont.)

Table E-1: Emails Sent Regarding File Submission Status (cont.)

Sender	EPA Program	Recipient	Notification Subject Line	Content	ID
EMTS	RFS and Fuels ABT	All Submitters within an Organization	EMTS Reminder - Outstanding Trade Transactions	There are <pending trade count> trade transactions initiated by <organization> that have not yet been accepted. Your trading partner has up to 2 business days to accept these trades before they expire. For additional support regarding EMTS, please contact <contact_email> or <contact_phone_number> . The following individuals were sent a copy of this notification: <user name> <user name> <user name>	120

(cont.)

Table E-1: Emails Sent Regarding File Submission Status (cont.)

Sender	EPA Program	Recipient	Notification Subject Line	Content	ID
EMTS	RFS and Fuels ABT	All Submitters within an Organization	EMTS Trade Expired	There are<number of expired trades> trades for <organization> that have expired as of <date>. For additional support regarding EMTS, please contact <contact_email> or <contact_phone_number> . The following individuals were sent a copy of this notification: <user name> <user name> <user name>	130
EMTS	RFS and Fuels ABT	All Submitters within an Organization	EMTS Trade Cancelled	A trade initiated by <organization> for a transaction on <transfer date> has been cancelled. EMTS Transaction ID: <Transaction ID> For additional support regarding EMTS, please contact <contact_email> or <contact_phone_number> The following individuals were sent a copy of this notification: <selling organization> <user name> <user name> <buying organization> <user name> <user name>	140

(cont.)

Table E-1: Emails Sent Regarding File Submission Status (cont.)

Sender	EPA Program	Recipient	Notification Subject Line	Content	ID
EMTS	RFS and Fuels ABT	All Submitters within an Organization	Trade Cancelled	A trade initiated by <organization> for a transaction on <transfer date> has been cancelled. EMTS Transaction ID: <Transaction ID> For additional support regarding EMTS, please contact <contact_email> or <contact_phone_number> The following individuals were sent a copy of this notification: <selling organization> <user name> <user name> <buying organization> <user name> <user name>	190

(cont.)

Table E-1: Emails Sent Regarding File Submission Status (cont.)

Sender	EPA Program	Recipient	Notification Subject Line	Content	ID
EMTS	RFS and Fuels ABT	All Submitters within an Organization	EMTS Trade Denied	A trade initiated by <organization> on <date> has been denied by <trading partner>. EMTS Transaction ID: <Transaction ID> For additional support regarding EMTS, please contact <contact_email> or <contact_phone_number> . The following individuals were sent a copy of this notification: <selling organization> <user name> <user name> <buying organization> <user name> <user name>	150

(cont.)

Table E-1: Emails Sent Regarding File Submission Status (cont.)

Sender	EPA Program	Recipient	Notification Subject Line	Content	ID
EMTS	RFS and Fuels ABT	All Submitters within an Organization	Trade Denied	A trade initiated by <organization> on <date> has been denied by <trading partner>. EMTS Transaction ID: <Transaction ID> For additional support regarding EMTS, please contact <contact_email> or <contact_phone_number> . The following individuals were sent a copy of this notification: <selling organization> <user name> <user name> <buying organization> <user name> <user name>	200

(cont.)

Table E-1: Emails Sent Regarding File Submission Status (cont.)

Sender	EPA Program	Recipient	Notification Subject Line	Content	ID
EMTS	RFS and Fuels ABT	All Submitters within an Organization	EMTS Notification of Outstanding Trade Transactions	Your organization, <organization>, has been identified as a trading partner for <number of pending or received trades> trade(s) that will expire within 2 business days. The following individuals were sent a copy of this notification: <user name> <user name> For additional support regarding EMTS, please contact <contact_email> or <contact_phone_number>	160
EMTS	RFS and Fuels ABT	All Submitters within an Organization	EMTS Reminder - Outstanding Trade Transactions (24 Hr)	There are <pending_trades_count> trade transaction(s) initiated by <organization's name> (<organization's company Id>) that have not yet been accepted. Your trading partner has 24 hours to accept these trades before they expire. The following individuals were sent a copy of this notification: <user name> <user name> For additional support regarding EMTS, please contact <contact_email> or <contact_phone_number>	170

(cont.)

Table E-1: Emails Sent Regarding File Submission Status (cont.)

Sender	EPA Program	Recipient	Notification Subject Line	Content	ID
EMTS	RFS	All Submitters within an Organization	EMTS Quarterly Reports	Quarterly Reports have been generated for <organization>. This statement must be verified and submitted to EPA no later than <date>. If you are a node user, you may retrieve these reports from the CDX node using the document download service. If you are a web user, you may download the document from the EMTS website. For additional support regarding EMTS, please contact <contact_email> or <contact_phone_number> . The following individuals were sent a copy of this notification: <user name> <user name> <user name>	300

(cont.)

Table E-1: Emails Sent Regarding File Submission Status (cont.)

Sender	EPA Program	Recipient	Notification Subject Line	Content	ID
EMTS	RFS	All Submitters within an Organization	EMTS Annual Statement	The Annual RIN Holding Statement has been generated for <organization>. This statement must be verified and submitted to EPA no later than <date>. If you are a node user, you may retrieve the Annual RIN Holding Statement from the CDX node using the document download service. If you are a web user, you may download the document from the EMTS website. For additional support regarding EMTS, please contact <contact_email> or <contact_phone_number> . The following individuals were sent a copy of this notification: <user name> <user name> <user name>	310

(cont.)

Table E-1: Emails Sent Regarding File Submission Status (cont.)

Sender	EPA Program	Recipient	Notification Subject Line	Content	ID
EMTS	RFS	All Submitters within an Organization	EMTS Notification of Transaction Error Web Form Availability	Your organization, <organization>, is required to report any RIN transaction errors that occurred during <Quarter><Year>. You must login to the EPA Moderated Transaction System (EMTS) and complete the Transaction Error web form. The report must be submitted to DC Fuels prior to the quarterly reporting deadline. For additional support regarding EMTS, please contact <contact_email> or <contact_phone_number> The following individuals were sent a copy of this notification: <user name> <user name>	330

(cont.)

Table E-1: Emails Sent Regarding File Submission Status (cont.)

Sender	EPA Program	Recipient	Notification Subject Line	Content	ID
EMTS	RFS	All Submitters within an Organization	EMTS Notification of Unreported Transaction Errors	Your organization, <organization>, has not reported transaction errors that occurred during <Quarter><Year>. You must login to the EPA Moderated Transaction System (EMTS) and complete the Transaction Error web form. The RFS2 Transaction Error Report must be submitted to DC Fuels prior to the quarterly reporting deadline. If you do not have any transaction errors to report, you do not need to submit the RFS2 Transaction Error Report. For additional support regarding EMTS, please contact <contact_email> or <contact_phone_number> The following individuals were sent a copy of this notification: <user name> <user name>	340

(cont.)

Table E-1: Emails Sent Regarding File Submission Status (cont.)

Sender	EPA Program	Recipient	Notification Subject Line	Content	ID
EMTS	RFS	All Submitters within an Organization	EMTS Notification of RFS2 Transaction Error Report Availability	The RFS2 Transaction Error Report for your organization, <organization>, is available for download through the EPA Moderated Transaction System (EMTS). You must download and submit the form to DC Fuels prior to the quarterly reporting deadline. For additional support regarding EMTS, please contact <contact_email> or <contact_phone_number> The following individuals were sent a copy of this notification: <user name> <user name>	350
EMTS	RFS	All Submitters and Viewers within an Organization	EMTS Notification of Small Blender RIN Separation	Your organization, <organization>, was identified as the Small Blender in a Separate Transaction on <date>. For additional support regarding EMTS, please contact <contact_email> or <contact_phone_number> The following individuals were sent a copy of this notification: <user name> <user name>	360

(cont.)

Table E-1: Emails Sent Regarding File Submission Status (cont.)

Sender	EPA Program	Recipient	Notification Subject Line	Content	ID
EMTS	RFS	All Submitters and Viewers within an Organization	EMTS Notification of Foreign Producer RIN Generation	Your organization, <organization>, was identified as the Foreign Producer in a Generate Transaction on <date>. For additional support regarding EMTS, please contact <contact_email> or <contact_phone_number> The following individuals were sent a copy of this notification: <user name> <user name>	390
EMTS	RFS and Fuels ABT	All Submitters and Viewers within an Organization	EMTS Notification of Unused Document	Your organization, <organization's name> (<organization's companyId>), has not downloaded the following document in <number of days> business days: <document name> EMTS will cancel your subscription after <cancellation days> business days of inactivity. If you wish to keep your subscription, please log in to EMTS and download the document. For additional support regarding EMTS, please contact <contact_email> or <contact_phone_number>	410

				The following individuals were sent a copy of this notification: <user name> <user name>	
EMTS	RFS and Fuels ABT	All Submitters and Viewers within an Organization	EMTS Notification of Subscription Status	Your organization, <organization's name> (<organization's company Id>), has not downloaded the following document in <number of days> business days: <document name> EMTS has canceled your subscription. You may re-subscribe on the "Manage Subscriptions" page of the EMTS user interface. For additional support regarding EMTS, please contact <contact_email> or <contact_phone_number> The following individuals were sent a copy of this notification: <user name> <user name>	420

(cont.)

Table E-1: Emails Sent Regarding File Submission Status (cont.)

Sender	EPA Program	Recipient	Notification Subject Line	Content	ID
EMTS	RFS and Fuels ABT	EPA only	EMTS Notification of Metadata Update	Changes were made to the metadata on <date>. Please view the following tables for details: Table Name: <name> Table Name: <name> Table Name: <name> ... For additional support regarding EMTS, please contact <contact_email> or <contact_phone_number> The following individuals were sent a copy of this notification: <user name> <user name> ---------- Sent by: <emts Url>	440
EMTS	RFS	All Submitters and Viewers within an Organization	EMTS Notification of Unretire Transaction	Your organization, <organization's name> (<organization's company Id>), has RINs that have been unretired by EPA. Please log in to EMTS to view details of this transaction. For additional support regarding EMTS, please contact <contact_email> or <contact_phone_number> The following individuals were sent a copy of this notification: <user name> <user name>	640

(cont.)

Table E-1: Emails Sent Regarding File Submission Status (cont.)

Sender	EPA Program	Recipient	Notification Subject Line	Content	ID
EMTS	RFS and Fuels ABT	All Submitters and Viewers within the agent's organizations	EMTS Notification of Unused Agent Documents	You have not downloaded the following document in <number of days> business days: <document name> EMTS will cancel your subscription after <cancellation days> business days of inactivity. If you wish to keep your subscription, please log in to EMTS and download the document. For additional support regarding EMTS, please contact <contact_email> or <contact_phone_number> The following individuals were sent a copy of this notification: <Organization's name> (<Organization's company ID>: <user name> <user name>	650

(cont.)

Table E-1: Emails Sent Regarding File Submission Status (cont.)

Sender	EPA Program	Recipient	Notification Subject Line	Content	ID
EMTS	RFS and Fuels ABT	All Submitters and Viewers within the agent's organizations	EMTS Notification of Agent Subscription Status	You have not downloaded the following document in <number of days> business days: <document name> EMTS has canceled your subscription. You may re-subscribe on the "Manage Agent Subscriptions" page of the EMTS user interface. For additional support regarding EMTS, please contact <contact_email> or <contact_phone_number> The following individuals were sent a copy of this notification: <Organization's name> (<Organization's company ID>: <user name> <user name>	660

(cont.)

Table E-1: Emails Sent Regarding File Submission Status (cont.)

Sender	EPA Program	Recipient	Notification Subject Line	Content	ID
EMTS	RFS	QAP Providers only	EMTS Notification of Importer Generated RINs	RINS have been generated on behalf of a foreign producer's fuel pathway with which you are actively affiliated. Please check your daily RIN Generation Report for details. ---------- For additional support regarding the EMTS, please contact <contact_email> or <contact_phone_number> . ---------- The following individuals were sent a copy of this notification for <organization>: <user name> ---------- Created on: <date>	740

(cont.)

Table E-1: Emails Sent Regarding File Submission Status (cont.)

Sender	EPA Program	Recipient	Notification Subject Line	Content	ID
EMTS	RFS	All Submitters and Viewers within an Organization	EMTS Notification of Pathway Association Suspension	A QAP provider has suspended its association with one or more of your pathways. Please log into EMTS and see the View Pathways page for details. ---------- For additional support regarding the EMTS, please contact <contact_email> or <contact_phone_number> . ---------- The following individuals were sent a copy of this notification for <organization>: <user name> <user name> ---------- Created on: <date>	760

(cont.)

Table E-1: Emails Sent Regarding File Submission Status (cont.)

Sender	EPA Program	Recipient	Notification Subject Line	Content	ID
EMTS	RFS	All Submitters and Viewers within an Organization	EMTS Notification of Pathway Association Restore	A QAP provider has restored its association with one or more of your pathways Please log into EMTS and see the View Pathways page for details. ---------- For additional support regarding the EMTS, please contact <contact_email> or <contact_phone_number> . ---------- The following individuals were sent a copy of this notification for <organization>: <user name> ---------- Created on: <date>	770

(cont.)

Table E-1: Emails Sent Regarding File Submission Status (cont.)

Sender	EPA Program	Recipient	Notification Subject Line	Content	ID
EMTS	RFS	QAP Providers only	EMTS Notification of Pathway Association Suspension	Your organization has suspended its association with one or more pathways. Please log into EMTS and see the View Affiliated Pathways page for details. ---------- For additional support regarding the EMTS, please contact <contact_email> or <contact_phone_number> ---------- The following individuals were sent a copy of this notification for <organization>: <user name> ---------- Created on: <date>	780

(cont.)

Table E-1: Emails Sent Regarding File Submission Status (cont.)

Sender	EPA Program	Recipient	Notification Subject Line	Content	ID
EMTS	RFS	QAP Providers only	EMTS Notification of Pathway Association Restore	Your organization has restored its association with one or more pathways. Please log into EMTS and see the View Affiliated Pathways page for details. ---------- For additional support regarding the EMTS, please contact <contact_email> or <contact_phone_number> . ---------- The following individuals were sent a copy of this notification for <organization>: <user name> ---------- Created on: <date>	790

Appendix F

EMTS Web Service Documents

If you are a node or node client user, you may subscribe to several documents that you can retrieve from the CDX Node on a scheduled basis. The procedures for retrieving documents are described in Section 6. All documents are available in .CSV or .XML file format. Since the documents are intended for node users, they contain code values rather than text descriptions.

F–1 Intervals for Documents

Document subscriptions may be provided daily, three times per day, once per week, or once per month. Each document will include information on the last full day of transactions contained in the report and the date in which EMTS created the document.

F–2 Organization vs. Agent Documents

EMTS offers two types of documents: Organization- and Agent-based.

Organization-based documents, which have been available in EMTS since its initial 1.0 release on July 1st, 2010, pertain to organization-specific EMTS data.

Agent documents were introduced in the EMTS release 1.5, and allow a user who is an "agent" for one or more distinct organizations (See the OTAQ Registration documentation on how to become an agent) to issue one solicit request only to retrieve all the documents for a given subscription for all the organizations that the user is an agent for. For example, if an EMTS user is an agent for Organizations O1 and O2, and both O1 and O2 are currently subscribing to document D1, then the user is able to issue one solicit request only to retrieve a zip file containing 2 D1 organization documents: O1's and O2's.

Notes:

- The organization documents inside an agent zip document are not themselves zipped. Unzipping an agent document produces the contained organization documents in clear.
- The organization documents in a given agent document may be of a variety of formats (e.g., CSV, XML) depending on the specifics of each organization's subscription.
- Similarly to how a user subscribes to a document for a given affiliated organization, an agent-type user must subscribe to each agent document that she wishes to have built by EMTS.

In the rest of the document, an organization for which a user is an agent is referred to as an agent-affiliated organization.

F–3 Document Parameters

When invoking the Solicit web service method to request a document, you must identify the name of the document, the organization identifier, and the date in which the document was created. The following table demonstrates how these parameters are used.

Parameter	Required	Format	Description	Example
documentName	Yes	See document names in this section.	The name of the document.	PENDING TRADES
organizationIdentifier	Yes	String	The public identification number of the organization, or the keyword "Agent" (Case insensitive) for Agent reports. This must be reported for all documents, with the exception of agency reports.	1234, or "Agent"
documentDate	No	YYYY-MM-DD	Creation date of the document. An empty documentDate will return the document created on the current system date (e.g., today). This field is required to obtain documents generated prior to the current system date.	2011-02-15

F–4 Summary of Web Service Documents

Note: Document names are case insensitive.

EPA Program	Document Name	Description	Frequencies	Content
RFS	PENDING TRADES	This document lists all trades that are in a pending state. Pending trades are either transactions that the seller has offered on one or more batches of RINS for which the buyer has not accepted yet, or the buyer has initiated a transaction and the trading partner has not yet issued a matching sell transaction.	Daily, 3 Per Day	Not date sensitive as pending trades expire within ten days. Format(s): CSV, XML.
RFS	PENDING TRADE DETAILS	This document lists additional details for all trades in a pending state. The document displays Originating Source information (GenerateOrganizationIdentifier, GenerateFacilityIdentifier, and BatchNumber) for all sell transactions. Additionally, for each sell transaction, the document contains as many rows as there are RIN batches involved in the transaction.	Daily, 3 Per Day	Not date sensitive as pending trades expire within ten days. Format(s): CSV, XML.
RFS	MONTHLY RIN HOLDINGS	This document lists the RIN Holdings for an organization for every day in the prior month, grouped by fuel code, assignment and RIN year.	Monthly	Always contains the last calendar month's RIN Holdings by day. Format(s): CSV, XML.

(cont.)

Summary of Web Service Documents (cont.)

	Document Name	Description	Frequencies	Content
RFS	RIN HOLDINGS	This document lists the current aggregate total RIN Holdings for an organization, grouped by fuel code, assignment, and RIN year.	Daily, 3 Per Day	Not date sensitive as this document always captures the current aggregate totals. Format(s): CSV, XML.
RFS	MONTHLY RIN GENERATION	The RIN Generation document includes all RIN Batches generated during the previous calendar month for a pathway verified by your organization. Note: for QAP Providers only	Monthly	Always contains the last calendar month's RIN Generation transactions . Format(s): CSV, XML.
RFS	RIN GENERATION	The RIN Generation document includes all RIN Batches generated during the last 10 days for a pathway verified by your organization. Note: for QAP Providers only	Weekly, Daily, 3 Per Day	Contains the last 10 days' RIN Generation transactions for verified pathways. Format(s): CSV, XML.

(cont.)

Summary of Web Service Documents (cont.)

	Document Name	Description	Frequencies	Content
RFS	MONTHLY TRANSACTION HISTORY	This document includes all generate, separate, buy, sell and retire transactions submitted by an organization during the prior month. The prior month's Transaction History report will be generated on the first Saturday of the current month (e.g., the Transaction History report of October will be generated on the first Saturday in November).	Monthly	Always contains the last calendar month's EMTS transaction activity. Format(s): CSV, XML.
RFS	TRANSACTION HISTORY	This document includes all generate, separate, buy, sell and retire transactions submitted by your organization through XML files or online transactions during the last 18 days.	Weekly, Daily, 3 Per Day	Always contains the last 18 days' EMTS transaction activity. Format(s): CSV, XML.
RFS	EXPIRED TRADES	This document lists the pending initiated and received trades that have expired in the previous ten days, as well as all pending trades that will expire within the next 24 hours	Daily, 3 Per Day	Always contains the last ten days of expired transaction activity. Format(s): CSV, XML.
RFS	COMPLETED TRADES	This document lists all trades that have been completed.	Weekly, Daily, 3 Per Day	Always contains the last ten days of completed trade activity. Format(s): CSV, XML.

(cont.)

Summary of Web Service Documents (cont.)

	Document Name	Description	Frequencies	Content
RFS	CANCELLED TRADES	This document lists all initiated and received trades that have been cancelled within the past 10 calendar days.	Daily	Always contains the last 10 days of cancelled trades. Format(s): CSV, XML.
RFS	RIN BATCHES	This document lists all RIN batches that an organization owns.	Weekly	Not date sensitive as it contains all RIN batches owned by an organization when the document is generated. Format(s): CSV, XML.
RFS	PATHWAY STATUS	This document includes all of a fuel producer's registered pathways and the QAP status of those pathways.	Daily	Format(s): CSV, XML.
RFS	TRANSACTION STATUS	This document includes all generate, separate, buy, sell and retire transactions submitted by your organization through XML files or online transactions with a status change in the past day.	Daily, 3 Per Day	Format(s): CSV, XML.
RFS	MONTHLY VERIFIED RINS GENERATE ACTIVITY	For QAP Providers, this document includes detailed information on all generate transactions submitted in the previous month for a pathway verified by your organization.	Monthly	Always contains previous month's initial generate transaction s for verified pathways. Format(s): CSV, XML.

(cont.)

Summary of Web Service Documents (cont.)

	Document Name	Description	Frequencies	Content
RFS	VERIFIED RINS GENERATE ACTIVITY	For QAP Providers, this document includes detailed information on all generate transactions submitted in the past 10 days for a pathway verified by your organization.	Weekly, Daily, or 3 Per Day	Always contains the last 10 days' initial generate transactions for verified pathways. Format(s): CSV, XML.
RFS	VERIFIED RINS RETIRE ACTIVITY	For QAP Providers, this document includes all retire transactions submitted by the generator in the past 10 days for a pathway verified by your organization.	Daily	Always contains the last 10 days' initial retire transactions for verified pathways. Format(s): CSV, XML.
RFS	VERIFIED RINS SELL ACTIVITY	For QAP Providers, this document includes all sell transactions submitted by the generator in the past 10 days for a pathway verified by your organization.	Daily	Always contains the last 10 days' initial sell transactions for verified pathways. Format(s): CSV, XML.
RFS	VERIFIED RINS SEPARATE ACTIVITY	For QAP Providers, this document includes all separate transactions submitted by the generator in the past 10 days for a pathway verified by your organization.	Daily	Always contains the last 10 days' initial separate transactions for

				verified pathways. Format(s): CSV, XML.

(cont.)

Summary of Web Service Documents (cont.)

	Document Name	Description	Frequencies	Content
	Agent Pending Trades Daily	This document lists all trades that are in a pending state. Pending trades are buy or sell transactions for which the trading party has not yet submitted a matching transaction.	Daily, Hourly	Formats: CSV, XML.
RFS	Agent Pending Trades Hourly	This document lists all trades that are in a pending state. Pending trades are buy or sell transactions for which the trading party has not yet submitted a matching transaction.	Hourly	Formats: CSV, XML.
RFS	Agent Monthly RIN Generation	This document lists all RIN Batches generated during the previous calendar month for a pathway verified by your organization.	Monthly	Formats: CSV, XML.
RFS	Agent RIN Generation Weekly	This document lists all RIN Batches generated during the last 10 days for a pathway verified by your organization.	Weekly	Formats: CSV, XML.
RFS	Agent RIN Generation Daily	This document lists all RIN Batches generated during the last 10 days for a pathway verified by your organization.	Daily	Formats: CSV, XML.

(cont.)

Summary of Web Service Documents (cont.)

	Document Name	Description	Frequencies	Content
RFS	Agent RIN Generation Hourly	This document lists all RIN Batches generated during the last 10 days for a pathway verified by your organization.	Hourly	Formats: CSV, XML.
RFS	Agent Monthly Transaction History	This document lists all generate, separate, buy, sell and retire transactions submitted by your organization through XML files or online transactions during the last calendar month.	Monthly	Formats: CSV, XML.
RFS	Agent Transaction History Weekly	This document lists all generate, separate, buy, sell and retire transactions submitted by your organization through XML files or online transactions during the last 18 days.	Weekly	Formats: CSV, XML.
RFS	Agent Transaction History Daily	This document lists all generate, separate, buy, sell and retire transactions submitted by your organization through XML files or online transactions during the last 18 days.	Daily	Formats: CSV, XML.
RFS	Agent Pending Trade Details Daily	This document lists all pending trades for your organization. It includes batch detail information for each transaction.	Daily	Formats: CSV, XML.

RFS	Agent Pending Trade Details Hourly	This document lists all pending trades for your organization. It includes batch detail information for each transaction.	Hourly	Formats: CSV, XML.

(cont.)

Summary of Web Service Documents (cont.)

	Document Name	Description	Frequencies	Content
RFS	Agent RIN Holdings Daily	This document lists the current aggregate total RIN Holdings for an organization grouped by fuel code, assignment and RIN year.	Daily	Formats: CSV, XML.
RFS	Agent RIN Holdings Hourly	This document lists the current aggregate total RIN Holdings for an organization grouped by fuel code, assignment and RIN year.	Hourly	Formats: CSV, XML.
RFS	Agent Transaction History Hourly	This document lists all generate, separate, buy, sell and retire transactions submitted by your organization through XML files or online transactions during the last 18 days.	Hourly	Formats: CSV, XML.
RFS	Agent Expired Trades Daily	This document lists all transactions that will expire within 1 business day as well as all trades that have expired in the last 10 days.	Daily	Formats: CSV, XML.
RFS	Agent Completed Trades Daily	This document lists all trades that were completed (i.e., no longer pending) over the last 10 days.	Daily	Formats: CSV, XML.
RFS	Agent Completed Trades Hourly	This document lists all trades that were completed	Hourly	Formats: CSV, XML.

		(i.e., no longer pending) over the last 10 days.		
RFS	Agent Completed Trades Weekly	This document lists all trades that were completed (i.e., no longer pending) over the last 10 days.	Weekly	Formats: CSV, XML.

(cont.)

Summary of Web Service Documents (cont.)

	Document Name	Description	Frequencies	Content
RFS	Agent Cancelled Trades Daily	This document lists trades that have recently been cancelled.	Daily	Formats: CSV, XML.
RFS	Agent Cancelled Trades Hourly	This document lists trades that have recently been cancelled.	Hourly	Formats: CSV, XML.
RFS	Agent RIN Batches Weekly	This document lists all RIN batches that your organization owns.	Weekly	Formats: CSV, XML.
RFS	Agent Transaction Status Daily	A document including all generate, separate, buy, sell and retire transactions submitted by your organization through XML files or online transactions with a status change in the past day.	Daily	Formats: CSV, XML.
RFS	Agent Transaction Status Hourly	A document including all generate, separate, buy, sell and retire transactions	Hourly	Formats: CSV, XML.

		submitted by your organization through XML files or online transactions with a status change in the past day.		
Fuels ABT	Fuels ABT Credit Holdings	A document including the current Fuels ABT credit account holdings.	Daily, 3 per day	Formats: CSV, XML.

(cont.)

Summary of Web Service Documents (cont.)

	Document Name	Description	Frequencies	Content
Fuels ABT	Fuels ABT Pending Trade Details	This document lists all details for pending Fuels ABT credit trades and includes generating source information.	Daily, 3 per day	Formats: CSV, XML.
Fuels ABT	Fuels ABT Pending Trades	This document lists all Fuels ABT credit trades that are in a pending state. Pending trades are buy or sell transactions for which the trading partner has not yet submitted a matching transaction.	Daily, 3 per day	Formats: CSV, XML.
Fuels ABT	Fuels ABT Transaction Status	A document including all Fuels ABT credit generate, buy, sell, and retire transactions with a status change in the past day.	Daily, 3 per day	Formats: CSV, XML.
Fuels ABT	Monthly Fuels ABT Credit Holdings	A document including an aggregate view of the total number of	Monthly	Formats: CSV, XML.

		Fuels ABT credits held by an organization, grouped by credit type and credit year for every day in the previous month.		
Fuels ABT	Monthly Fuels ABT Transaction History	A document including all Fuels ABT credit generate, buy, sell and retire transactions submitted by your organization during the previous calendar month.	Monthly	Formats: CSV, XML.

F–5 RFS Pending Trades

The RFS Pending Trades document includes all pending trades initiated and received for an organization. The trades with TradeSource of "Initiated" show trades that were offered by the organization to their trading partner. When a transaction includes advanced options for RIN selection, the originating organization, facility, and batch number are shown. The CDX Transaction Identifier, Submission Identifier, Submission Comment Text, Transaction Comment Text, and Supporting Document information are intended for internal use. These fields are populated only for initiated trades.

Table F-5: Data Elements in the RFS Pending Trades Document

CDXTransactionIdentifier
OrganizationName
OrganizationIdentifier
SubmissionIdentifier
SubmissionDate
ExpirationDate
SubmissionMethod
TransactionIdentifier
TransactionTypeCode
TradeSource
TransactionPartnerOrganizationIdentifier
TransactionPartnerOrganizationName
RINQuantity

BatchVolume
FuelCode
AssignmentCode
RINYear
QAPServiceType
ReasonCode
RINPriceAmount
GallonPriceAmount
TransferDate
PTDNumber

(cont.)

Table F-5: Data Elements in the RFS Pending Trades Document (cont.)

GenerateOrganizationIdentifier
GenerateFacilityIdentifier
BatchNumberText
SubmissionCommentText
TransactionDetailCommentText
PublicSupportingDocumentText1
PublicSupportingDocumentNumberText1
PublicSupportingDocumentText2
PublicSupportingDocumentNumberText2
SupportingDocumentText1
SupportingDocumentNumberText1
SupportingDocumentText2
SupportingDocumentNumberText2

F-6 RFS Pending Trade Details

The RFS Pending Trade Details document includes all pending trades initiated and received for an organization. The trades with TradeSource of “Initiated” show trades that were offered by the organization to their trading partner. When a transaction includes advanced options for RIN selection, the originating organization, facility, and batch number are shown. The CDX Transaction Identifier, Submission Identifier, Submission Comment Text, Transaction Identifier, Transaction Comment Text, and Supporting Document

information are intended for internal use. These fields are populated only for initiated trades. The document also displays Originating Source information (GenerateOrganizationIdentifier, GenerateFacilityIdentifier, and BatchNumber) for all sell transactions. Additionally, for each sell transaction, the document contains as many rows as there are RIN batches involved in the transaction.

Table F-6: Data Elements in the RFS Pending Trade Details Document

CDXTransactionIdentifier
OrganizationName
OrganizationIdentifier
SubmissionIdentifier

(cont.)

Table F-6: Data Elements in the RFS Pending Trade Details Document (cont.)
SubmissionDate
ExpirationDate
SubmissionMethod
TransactionIdentifier
TransactionTypeCode
TradeSource
TransactionPartnerOrganizationIdentifier
TransactionPartnerOrganizationName
RINQuantity
BatchVolume
FuelCode
AssignmentCode
RINYear
QAPServiceType
ReasonCode
RINPriceAmount
GallonPriceAmount
TransferDate
PTDNumber
GenerateOrganizationIdentifier

GenerateFacilityIdentifier
ForeignOrganizationIdentifier
ForeignFacilityIdentifier
QAPProviderName
QAPProviderIdentifier
BatchNumberText
ProductionDate
FuelCategoryCode
EquivalenceValue

(cont.)

Table F-6: Data Elements in the RFS Pending Trade Details Document (cont.)
SubmissionCommentText
TransactionDetailCommentText
PublicSupportingDocumentText1
PublicSupportingDocumentNumberText1
PublicSupportingDocumentText2
PublicSupportingDocumentNumberText2
SupportingDocumentText1
SupportingDocumentNumberText1
SupportingDocumentText2
SupportingDocumentNumberText2

F–7 RFS Monthly RIN Holdings

The RFS Monthly RIN Holdings document is an aggregate view of the total number of RINs held by an organization, grouped by fuel code, assignment code, and RIN year for every day in the previous month. The total available RINs are the number of RINs that can be used for transactions. The total pending RINs are RINs that have been designated for a sell transaction that are still pending. These RINs are not available for any other transaction until the trade is cancelled, denied, or expired. The total reserved RINs are RINs that are associated with a separate, sell, or retire transaction that has not been submitted from the EMTS Transaction Bin. These RINs cannot be used for any other transactions until the user removes the transaction from the EMTS Transaction Bin. The numbers of total locked RINs are RINs that have been locked (by either the industry user or EPA) and cannot be used for any transactions until they are unlocked.

Table F-7: Data Elements in the RFS Monthly RIN Holding Document

OrganizationName
OrganizationIdentifier
FuelCode
RINYear
AssignmentCode
QAPServiceType
TotalAvailableRINs

(cont.)

Table F-7: Data Elements in the RFS Monthly RIN Holding Document (cont.)
TotalPendingRINs
TotalReservedRINs
TotalLockedRINs
TotalRINs
DateRecorded

F–8 RFS RIN Holdings

The RFS RIN Holdings document is an aggregate view of the total number of RINs held by an organization, grouped by fuel code, assignment code, and RIN year. The total available RINs are the number of RINs that can be used for transactions. The total pending RINs are RINs that have been designated for a sell transaction that are still pending. These RINs are not available for any other transaction until the trade is cancelled, denied, or expired. The total reserved RINs are RINs that are associated with a separate, sell, or retire transaction that has not been submitted from the EMTS Transaction Bin. These RINs cannot be used for any other transactions until the user removes the transaction from the EMTS Transaction Bin. The numbers of total locked RINs are RINs that have been locked (by either the industry user or EPA) and cannot be used for any transactions until they are unlocked.

Table F-8: Data Elements in the RFS RIN Holding Document

OrganizationName
OrganizationIdentifier
FuelCode
RINYear

AssignmentCode
QAPServiceType
TotalAvailableRINs
TotalPendingRINs
TotalReservedRINs
TotalLockedRINs
TotalRINs
DateRecorded

F–9 RFS Monthly RIN Generation

The RFS Monthly RIN Generation document includes all RIN Batches generated during the previous calendar month for a pathway verified by your organization.

Table F-9: Data Elements in the RFS Monthly RIN Generation Document

OrganizationIdentifier
OrganizationName
TransactionIdentifier
SubmissionIdentifier
CDXTransactionIdentifier
SubmissionDate
ProcessedDate
FuelCode
FuelCodeText
RINYear
QAPServiceType
ProductionDate
RINQuantity
BatchVolume
DenaturantVolume
EquivalenceValue
FuelCategoryCode
FuelCategoryCodeText

ProcessCode
ProcessCodeText
GenerateOrganizationIdentifier
GenerateOrganizationName
GenerateFacilityIdentifier
GenerateFacilityName
GenerateFacilityStreet
GenerateFacilityStreet 2

(cont.)

Table F-9: Data Elements in the RFS Monthly RIN Generation Document (cont.)

GenerateFacilityCity
GenerateFacilityStateCode
GenerateFacilityZipCode
GenerateFacilityCountryCode
GenerateFacilityCountryName
QAPProviderName
QAPProviderIdentifier
BatchNumberText
ImportFacilityIdentifier
ImportFacilityName
TransactionDetailCommentText
SubmissionMethod
SubmissionCommentText
FeedstockCode1
FeedstockCodeText1
RenewableBiomassIndicator1
FeedstockQuantity1
FeedstockMeasureCode1
FeedstockMeasureCodeText1
FeedstockCommentText1
FeedstockCode2

FeedstockCodeText2
RenewableBiomassIndicator2
FeedstockQuantity2
FeedstockMeasureCode2
FeedstockMeasureCodeText2
FeedstockCommentText2
FeedstockCode3
FeedstockCodeText3

(cont.)

Table F-9: Data Elements in the RFS Monthly RIN Generation Document (cont.)

RenewableBiomassIndicator3
FeedstockQuantity3
FeedstockMeasureCode3
FeedstockMeasureCodeText3
FeedstockCommentText3
FeedstockCode4
FeedstockCodeText4
RenewableBiomassIndicator4
FeedstockQuantity4
FeedstockMeasureCode4
FeedstockMeasureCodeText4
FeedstockCommentText4
CoProductCode1
CoProductCodeText1
CoProductCommentText1
CoProductCode2
CoProductCodeText2
CoProductCommentText2
SupportingDocumentText1
SupportingDocumentNumberText1
SupportingDocumentText2

SupportingDocumentNumberText2

F–10 RFS RIN Generation

The RFS RIN Generation document includes all RIN Batches generated during the last 10 days for a pathway verified by your organization.

Table F-10: Data Elements in the RFS RIN Generation Document

OrganizationIdentifier
OrganizationName
TransactionIdentifier
SubmissionIdentifier
CDXTransactionIdentifier
SubmissionDate
ProcessedDate
FuelCode
FuelCodeText
RINYear
QAPServiceType
ProductionDate
RINQuantity
BatchVolume
DenaturantVolume
EquivalenceValue
FuelCategoryCode
FuelCategoryCodeText
ProcessCode
ProcessCodeText
GenerateOrganizationIdentifier
GenerateOrganizationName
GenerateFacilityIdentifier
GenerateFacilityName
GenerateFacilityStreet
GenerateFacilityStreet 2

GenerateFacilityCity

(cont.)

Table F-10: Data Elements in the RFS RIN Generation Document (cont.)

GenerateFacilityStateCode
GenerateFacilityZipCode
GenerateFacilityCountryCode
GenerateFacilityCountryName
QAPProviderName
QAPProviderIdentifier
BatchNumberText
ImportFacilityIdentifier
ImportFacilityName
TransactionDetailCommentText
SubmissionMethod
SubmissionCommentText
FeedstockCode1
FeedstockCodeText1
RenewableBiomassIndicator1
FeedstockQuantity1
FeedstockMeasureCode1
eedstockMeasureCodeText1
FeedstockCommentText1
FeedstockCode2
FeedstockCodeText2
RenewableBiomassIndicator2
FeedstockQuantity2
FeedstockMeasureCode2
FeedstockMeasureCodeText2
FeedstockCommentText2

FeedstockCode3

(cont.)

Table F-10: Data Elements in the RFS RIN Generation Document (cont.)

FeedstockCodeText3
RenewableBiomassIndicator3
FeedstockQuantity3
FeedstockMeasureCode3
FeedstockMeasureCodeText3
FeedstockCommentText3
FeedstockCode4
FeedstockCodeText4
RenewableBiomassIndicator4
FeedstockQuantity4
FeedstockMeasureCode4
FeedstockMeasureCodeText4
FeedstockCommentText4
CoProductCode1
CoProductCodeText1
CoProductCommentText1
CoProductCode2
CoProductCodeText2
CoProductCommentText2
SupportingDocumentText1
SupportingDocumentNumberText1
SupportingDocumentText2
SupportingDocumentNumberText2

F–11 RFS Monthly Transaction History

The RFS Monthly Transaction History document contains generate, separate, retire, buy and sell transactions submitted by an organization for the most recent prior calendar month. The document includes

buy and sell transactions submitted by that organization that are in a pending state. If two or more batches are used in a single trade or separate transaction then multiple batches are identified with the same transaction ID.

Table F-11: Data Elements in the RFS Monthly Transaction History Document

CDXTransactionIdentifier
OrganizationName
OrganizationIdentifier
SubmissionIdentifier
SubmissionDate
SubmissionMethod
TransactionIdentifier
TransactionStatusCode
TransactionStatusDate
TransactionTypeCode
RINQuantity
BatchVolume
TransactionPartnerOrganizationName
RINPriceAmount
GallonPriceAmount
TransactionDate or TransferDate
PTDNumber
TradingPartnerPTD
MatchedTransactionIdentifier
MatchingTransactionIdentifier
ExpirationDate
GenerateOrganizationIdentifier
GenerateFacilityIdentifier
QAPProviderName
QAPProviderIdentifier

(cont.)

Table F-11: Data Elements in the RFS Monthly Transaction History Document (cont.)

BatchNumberText
ProcessCode
ProductionDate
FuelCategoryCode
DenaturantVolume
EquivalenceValue
SubmissionCommentText
TransactionDetailCommentText
PublicSupportingDocumentText1
PublicSupportingDocumentNumberText1
PublicSupportingDocumentText2
PublicSupportingDocumentNumberText2
SupportingDocumentText1
SupportingDocumentNumberText1
SupportingDocumentText2
SupportingDocumentNumberText2

F–12 RFS Transaction History

The RFS RIN Transaction History document includes all generate, separate, buy, sell and retire transactions submitted by your organization through XML files or online transactions during the last 18 days.

Table F-12: Data Elements in the RFS Transaction History Document

CDXTransactionIdentifier
OrganizationName
OrganizationIdentifier
SubmissionIdentifier
SubmissionDate
SubmissionMethod
TransactionIdentifier
TransactionStatusCode
TransactionStatusDate
TransactionTypeCode
RINQuantity
BatchVolume
FuelCode
AssignmentCode
RINYear
QAPServiceType
ReasonCode
TransactionPartnerOrganizationIdentifier
TransactionPartnerOrganizationName
RINPriceAmount
GallonPriceAmount
TransactionDate or TransferDate
PTDNumber
TradingPartnerPTD
MatchedTransactionIdentifier

(cont.)

Table F-12: Data Elements in the RFS Transaction History Document (cont.)

ExpirationDate
GenerateOrganizationIdentifier
GenerateFacilityIdentifier
QAPProviderName
QAPProviderIdentifier
ForeignOrganizationIdentifier
ForeignFacilityIdentifier
BatchNumberText
ProcessCode
ProductionDate
FuelCategoryCode
DenaturantVolume
EquivalenceValue
SubmissionCommentText
TransactionDetailCommentText
PublicSupportingDocumentText1
PublicSupportingDocumentNumberText1
PublicSupportingDocumentText2
PublicSupportingDocumentNumberText2
SupportingDocumentText1
SupportingDocumentNumberText1
SupportingDocumentText2
SupportingDocumentNumberText2
PublicSupportingPartnerDocumentText1
PublicSupportingPartnerDocumentNumberText1
PublicSupportingPartnerDocumentText2
PublicSupportingPartnerDocumentNumberText2

(cont.)

F–13 RFS Expired Trades

The RFS Expired Trades document lists all of an organization's pending trades that have expired in the previous ten days as well as all pending trades that will expire within the next 24 hours. The trades with a TradeSource of “Initiated” show trades that were offered by the organization to a trading partner.

Table F-13: Data Elements in the RFS Expired Trades Document

CDXTransactionIdentifier
OrganizationName
OrganizationIdentifier
SubmissionIdentifier
SubmissionDate
ExpirationDate
SubmissionMethod
TransactionIdentifier
TransactionStatusCode
TransactionStatusDate
TransactionTypeCode
TradeSource
TransactionPartnerOrganizationIdentifier
TransactionPartnerOrganizationName
RINQuantity
BatchVolume
FuelCode
AssignmentCode
RINYear
QAPServiceType
RINPriceAmount
GallonPriceAmount
TransferDate
PTDNumber
ReasonCode

(cont.)

Table F-13: Data Elements in the RFS Expired Trades Document (cont.)

GenerateOrganizationIdentifier
GenerateFacilityIdentifier
BatchNumberText
SubmissionCommentText
TransactionDetailCommentText
PublicSupportingDocumentText1
PublicSupportingDocumentNumberText1
PublicSupportingDocumentText2
PublicSupportingDocumentNumberText2
SupportingDocumentText1
SupportingDocumentNumberText1
SupportingDocumentText2
SupportingDocumentNumberText2

F–14 RFS Completed Trades

The RFS Completed Trades document shows all of an organization's trades that have been completed (processed, cancelled, expired or denied) in the last ten days. This includes trades that were initiated by the organization.

Table F-14: Data Elements in the RFS Completed Trades Document

CDXTransactionIdentifier
OrganizationName
OrganizationIdentifier
SubmissionIdentifier
SubmissionDate
SubmissionMethod
TransactionIdentifier
MatchedTransactionIdentifier
MatchingTransactionIdentifier
TransactionStatusCode

(cont.)

Table F-14: Data Elements in the RFS Completed Trades Document (cont.)

TransactionStatusDate
TransactionTypeCode
TransactionPartnerOrganizationIdentifier
TransactionPartnerOrganizationName
RINQuantity
BatchVolume
FuelCode
AssignmentCode
RINYear
QAPServiceType
ReasonCode
RINPriceAmount
GallonPriceAmount
TransferDate
PTDNumber
TradingPartnerPTD
GenerateOrganizationIdentifier
GenerateFacilityIdentifier
BatchNumberText
SubmissionCommentText
TransactionDetailCommentText
PublicSupportingDocumentText1
PublicSupportingDocumentNumberText1
PublicSupportingDocumentText2
PublicSupportingDocumentNumberText2
SupportingDocumentText1
SupportingDocumentNumberText1
SupportingDocumentText2
SupportingDocumentNumberText2

F–15 RFS Cancelled Trades

The RFS Cancelled Trades document lists all initiated and received trades that have been cancelled within the past 10 calendar days.

Table F-15: Data Elements in the RFS Cancelled Trades Document

CDXTransactionIdentifier
OrganizationName
OrganizationIdentifier
SubmissionIdentifier
SubmissionDate
ExpirationDate
SubmissionMethod
TransactionIdentifier
MatchedTransactionIdentifier
TransactionStatusCode
TransactionStatusDate
TransactionTypeCode
TradeSource
TransactionPartnerOrganizationIdentifier
TransactionPartnerOrganizationName
RINQuantity
BatchVolume
FuelCode
AssignmentCode
RINYear
QAPServiceType
ReasonCode
RINPriceAmount
GallonPriceAmount
TransferDate
PTDNumber

(cont.)

Table F-15: Data Elements in the RFS Cancelled Trades Document (cont.)

GenerateOrganizationIdentifier
GenerateFacilityIdentifier
BatchNumberText
SubmissionCommentText
TransactionDetailCommentText
CancelledTradeCommentText
PublicSupportingDocumentText1
PublicSupportingDocumentNumberText1
PublicSupportingDocumentText2
PublicSupportingDocumentNumberText2
SupportingDocumentText1
SupportingDocumentNumberText1
SupportingDocumentText2
SupportingDocumentNumber2

F–16 RFS RIN Batches

The RFS RIN Batches document lists all RIN batches that an organization owns.

Table F-16: Data Elements in the RFS RIN Batches Document

RINQuantity
FuelCode
AssignmentCode
RINYear
EquivalenceValue
FuelCategoryCode
ProductionDate
OriginatingOrganizationIdentifier
OriginatingFacilityIdentifier
BatchNumberText
TransactionIdentifier
RINStatusCode

F–17 RFS Pathway Status

The RFS Pathway Status document includes all of a fuel producer's registered pathways and the QAP status of those pathways.

Table F-17: Data Elements in the RFS Pathway Status Document

OrganizationName
OrganizationIdentifier
FacilityIdentifier
FuelCode
FuelCategoryCode
ProcessCode
Feedstock Code
QAPServiceTypeCode
QAPStatus

F–18 RFS Transaction Status

The RFS Transaction Status document includes all generate, separate, buy, sell and retire transactions submitted by your organization through XML files or online transactions with a status change in the past day.

Table F-18: Data Elements in the RFS Transaction Status Document

CDXTransactionIdentifier
OrganizationName
OrganizationIdentifier
SubmissionIdentifier
SubmissionDate
SubmissionMethod
TransactionIdentifier
TransactionStatusCode
TransactionStatusDate

(cont.)

Table F-18: Data Elements in the RFS Transaction Status Document (cont.)

TransactionTypeCode
RINQuantity
BatchVolume
FuelCode
AssignmentCode
RINYear
QAPServiceType
ReasonCode
TransactionPartnerOrganizationIdentifier
TransactionPartnerOrganizationName
RINPriceAmount
GallonPriceAmount
TransactionDate or Transfer Date
PTDNumber
TradingPartnerPTD
MatchedTransactionIdentifier
MatchingTransactionIdentifier
ExpirationDate
GenerateOrganizationIdentifier
GenerateFacilityIdentifier
QAPProviderName
QAPProviderIdentifier
BatchNumberText
ProcessCode
ProductionDate
FuelCategoryCode
DenaturantVolume
EquivalenceValue
SubmissionCommentText
TransactionDetailCommentText

(cont.)

Table F-18: Data Elements in the RFS Transaction Status Document (cont.)

PublicSupportingDocumentText1
PublicSupportingDocumentNumberText1
PublicSupportingDocumentText2
PublicSupportingDocumentNumberText2
SupportingDocumentText1
SupportingDocumentNumberText1
SupportingDocumentText2
SupportingDocumentNumber2

F–19 RFS Monthly Verified RINs Generate Activity

The RFS Monthly Verified RINs Generate Activity document includes all generate transactions the previous month for a pathway verified by your organization.

Table F-19: Data Elements in the RFS Monthly Verified RINs Generate Activity Document

OrganizationIdentifier
OrganizationName
TransactionIdentifier
SubmissionIdentifier
CDXTransactionIdentifier
SubmissionDate
TransactionStatusDate
FuelCode
FuelCodeText
RINYear
QAPServiceType
ProductionDate
RINQuantity
BatchVolume
DenaturantVolume

(cont.)

Table F-19: Data Elements in the RFS Monthly Verified RINs Generate Activity Document (cont.)

EquivalenceValue
FuelCategoryCode
FuelCategoryCodeText
ProcessCode
ProcessCodeText
GenerateOrganizationIdentifier
GenerateOrganizationName
GenerateFacilityIdentifier
GenerateFacilityName
GenerateFacilityStreet
GenerateFacilityStreet2
GenerateFacilityCity
GenerateFacilityStateCode
GenerateFacilityZipCode
GenerateFacilityCountryCode
GenerateFacilityCountryName
QAPProviderName
QAPProviderIdentifier
BatchNumberText
ImportFacilityIdentifier
ImportFacilityName
TransactionDetailCommentText
SubmissionMethod
SubmissionCommentText
FeedstockCode1
FeedstockCodeText1
RenewableBiomassIndicator1
FeedstockQuantity1
FeedstockMeasureCode1

(cont.)

Table F-19: Data Elements in the RFS Monthly Verified RINs Generate Activity Document (cont.)

FeedstockMeasureCodeText1
FeedstockCommentText1
FeedstockCode2
FeedstockCodeText2
RenewableBiomassIndicator2
FeedstockQuantity2
FeedstockMeasureCode2
FeedstockMeasureCodeText2
FeedstockCommentText2
FeedstockCode3
FeedstockCodeText3
RenewableBiomassIndicator3
FeedstockQuantity3
FeedstockMeasureCode3
FeedstockMeasureCodeText3
FeedstockCommentText3
FeedstockCode4
FeedstockCodeText4
RenewableBiomassIndicator4
FeedstockQuantity4
FeedstockMeasureCode4
FeedstockMeasureCodeText4
FeedstockCommentText4
CoProductCode1
CoProductCodeText1
CoProductCommentText1
CoProductCode2
CoProductCodeText2
CoProductCommentText2

(cont.)

Table F-19: Data Elements in the RFS Monthly Verified RINs Generate Activity Document (cont.)

SupportingDocumentText1
SupportingDocumentNumberText1
SupportingDocumentText2
SupportingDocumentNumberText2

F–20 RFS Verified RINs Generate Activity

The RFS Verified RINs Generate Activity document includes all generate transactions in the past 10 days for a pathway verified by your organization.

Table F-20: Data Elements in the RFS Verified RINs Generate Activity Document

OrganizationIdentifier
OrganizationName
TransactionIdentifier
SubmissionIdentifier
CDXTransactionIdentifier
SubmissionDate
TransactionStatusDate
FuelCode
FuelCodeText
RINYear
QAPServiceType
ProductionDate
RINQuantity
BatchVolume
DenaturantVolume
EquivalenceValue
FuelCategoryCode
FuelCategoryCodeText

(cont.)

Table F-20: Data Elements in the RFS Verified RINs Generate Activity Document (cont.)

ProcessCode
ProcessCodeText
GenerateOrganizationIdentifier
GenerateOrganizationName
GenerateFacilityIdentifier
GenerateFacilityName
GenerateFacilityStreet
GenerateFacilityStreet2
GenerateFacilityCity
GenerateFacilityStateCode
GenerateFacilityZipCode
GenerateFacilityCountryCode
GenerateFacilityCountryName
QAPProviderName
QAPProviderIdentifier
BatchNumberText
ImportFacilityIdentifier
ImportFacilityName
TransactionDetailCommentText
SubmissionMethod
SubmissionCommentText
FeedstockCode1
FeedstockCodeText1
RenewableBiomassIndicator1
FeedstockQuantity1
FeedstockMeasureCode1
FeedstockMeasureCodeText1
FeedstockCommentText1
FeedstockCode2

(cont.)

Table F-20: Data Elements in the RFS Verified RINs Generate Activity Document (cont.)

FeedstockCodeText2
RenewableBiomassIndicator2
FeedstockQuantity2
FeedstockMeasureCode2
FeedstockMeasureCodeText2
FeedstockCommentText2
FeedstockCode3
FeedstockCodeText3
RenewableBiomassIndicator3
FeedstockQuantity3
FeedstockMeasureCode3
FeedstockMeasureCodeText3
FeedstockCommentText3
FeedstockCode4
FeedstockCodeText4
RenewableBiomassIndicator4
FeedstockQuantity4
FeedstockMeasureCode4
FeedstockMeasureCodeText4
FeedstockCommentText4
CoProductCode1
CoProductCodeText1
CoProductCommentText1
CoProductCode2
CoProductCodeText2
CoProductCommentText2
SupportingDocumentText1
SupportingDocumentNumberText1
SupportingDocumentText2
SupportingDocumentNumberText2

F–21 RFS Verified RINs Retire Activity

The RFS Verified RINs Retire Activity document includes all retire transactions submitted by the generator in the past 10 days for a pathway verified by your organization.

Table F-21: Data Elements in the RFS Verified RINs Retire Activity Document

OrganizationIdentifier
OrganizationName
TransactionCode
TransactionIdentifier
SubmissionIdentifier
CDXTransactionIdentifier
SubmissionDate
TransactionStatusDate
FuelCode
AssignmentCode
RINYear
QAPServiceType
RINQuantity
BatchVolume
ReasonCode
TransactionDetailCommentText
SubmissionMethod
SubmissionCommentText
GenerateOrganizationIdentifier
GenerateFacilityIdentifier
QAPProviderName
QAPProviderIdentifier
ForeignOrganizationIdentifier
ForesignFacilityIdentifier

(cont.)

Table F-21: Data Elements in the RFS Verified RINs Retire Activity Document (cont.)

BatchNumberText
SupportingDocumentText1
SupportingDocumentNumberText1
SupportingDocumentText2
SupportingDocumentNumberText2

F–22 RFS Verified RINs Sell Activity

The RFS Verified RINs Sell Activity document includes all sell transactions submitted by the generator in the past 10 days for a pathway verified by your organization.

Table F-22: Data Elements in the RFS Verified RINs Sell Activity Document

RINQuantity
FuelCode
AssignmentCode
RINYear
QAPServiceType
EquivalenceValue
FuelCategoryCode
ProductionDate
RINGeneratingCompanyName
RINGeneratingCompanyId
RINGeneratingFacilityName
RINGeneratingFacilityId
QAPProviderName
QAPProviderIdentifier
FuelProducingCompanyName
FuelProducingCompanyId
FuelProducingFacilityName

(cont.)

Table F-22: Data Elements in the RFS Verified RINs Sell Activity Document (cont.)

FuelProducingFacilityId
ProductionBatchNumber
CDXTransactionIdentifier
OrganizationName
OrganizationIdentifier
SubmissionIdentifier
SubmissionDate
SubmissionMethod
TransactionIdentifier
MatchedTransactionIdentifier
MatchingTransactionIdentifier
TransactionStatusCode
TransactionStatusDate
TransactionPartnerOrganizationIdentifier
TransactionPartnerOrganizationName
TransactionRINQuantity
TransactionBatchVolume
ReasonCode
RINPriceAmount
GallonPriceAmount
TransferDate
PTDNumber
TradingPartnerPTD
GenerateOrganizationIdentifier
GenerateFacilityIdentifier
BatchNumber
SubmissionCommentText
TransactionDetailCommentText

(cont.)

Table F-22: Data Elements in the RFS Verified RINs Sell Activity Document (cont.)

PublicSupportingDocumentText1
PublicSupportingDocumentNumberText1
PublicSupportingDocumentText2
PublicSupportingDocumentNumberText2
SupportingDocumentText1
SupportingDocumentNumberText1
SupportingDocumentText2
SupportingDocumentNumberText2
PublicSupportingPartnerDocumentText1
PublicSupportingPartnerDocumentNumberText1
PublicSupportingPartnerDocumentText2
PublicSupportingPartnerDocumentNumberText2

F–23 RFS Verified RINs Separate Activity

The RFS Verified RINs Separate Activity document includes all separate transactions submitted by the generator in the past 10 days for a pathway verified by the organization.

Table F-23: Data Elements in the RFS Verified RINs Separate Activity Document

OrganizationIdentifier
OrganizationName
TransactionCode
TransactionIdentifier
SubmissionIdentifier
CDXTransactionIdentifier
SubmissionDate
TransactionStatusDate
TransactionDate
FuelCode
FuelProducingCompanyId

(cont.)

Table F-23: Data Elements in the RFS Verified RINs Separate Activity Document (cont.)

FuelProducingFacNumber
AssignmentCode
RINYear
QAPServiceType
RINQuantity
BatchVolume
ReasonCode
TransactionDetailCommentText
SubmissionMethod
SubmissionCommentText
GenerateOrganizationIdentifier
GenerateFacilityIdentifier
QAPProviderName
QAPProviderIdentifier
ForeignOrganizationIdentifier
ForesignFacilityIdentifier
BatchNumberText
SupportingDocumentText1
SupportingDocumentNumberText1
SupportingDocumentText2
SupportingDocumentNumberText2

F–24 RFS Agent Pending Trades

The RFS Agent Pending Trades zipped document contains one or more organization RFS Pending Trades documents corresponding to the subscriber's agent-affiliated organizations' RFS Pending Trades subscriptions.

There are two distinct RFS Agent Pending Trades documents:

- RFS Agent Pending Trades Daily: Contains the RFS Pending Trades documents built according to the "Daily" frequency.
- RFS Agent Pending Trades Hourly: Contains the RFS Pending Trades documents built according to the "Three times a day" frequency.

F–25 RFS Agent Pending Trade Details

The RFS Agent Pending Trade Details zipped document contains one or more organization RFS Pending Trade Details documents corresponding to the subscriber's agent-affiliated organizations' RFS Pending Trade Details subscriptions.

There are two distinct RFS Agent Pending Trade Details documents:

- RFS Agent Pending Trade Details Daily: Contains the RFS Pending Trade Details documents built according to the "Daily" frequency.
- RFS Agent Pending Trade Details Hourly: Contains the RFS Pending Trade Details documents built according to the "Three times a day" frequency.

F–26 RFS Agent RIN Holdings

The RFS Agent RIN Holdings zipped document contains one or more organization RFS RIN Holdings documents corresponding to the subscriber's agent-affiliated organizations' RFS RIN Holdings subscriptions.

There are two distinct RFS Agent RIN Holdings documents:

- RFS Agent RIN Holdings Daily: Contains the RFS RIN Holdings documents built according to the "Daily" frequency.
- RFS Agent RIN Holdings Hourly: Contains the RFS RIN Holdings documents built according to the "three times a day" frequency.

F–27 RFS Agent Monthly RIN Generation

The RFS Agent Monthly RIN Generation zipped documents contains one or more organization RFS Monthly RIN Generation documents corresponding to the subscriber's agent-affiliated organizations' RFS Monthly RIN Generation subscriptions.

There is only one distinct RFS Agent Monthly RIN Generation document:

- RFS Agent Monthly RIN Generation: Contains the RFS Monthly RIN Generation documents built according to the "Monthly" frequency.

F–28 RFS Agent RIN Generation

The RFS Agent RIN Generation zipped documents contains one or more organization RFS RIN Generation documents corresponding to the subscriber's agent-affiliated organizations' RFS RIN Generation subscriptions.

There are three distinct RFS Agent RIN Holdings documents:

- RFS Agent RIN Generation Weekly: Contains the RFS RIN Generation documents built according to the "Weekly" frequency.
- RFS Agent RIN Generation Daily: Contains the RFS RIN Generation documents built according to the "Daily" frequency.
- RFS Agent RIN Generation Hourly: Contains the RFS RIN Generation documents built according to the "Three times a day" frequency.

F–29 RFS Agent Transaction History

The RFS Agent Transaction History zipped documents contains one or more organization RFS Transaction History documents corresponding to the subscriber's agent-affiliated organizations' RFS Transaction History subscriptions.

There are three distinct RFS Agent Transaction History documents:

- RFS Agent Transaction History Weekly: Contains the RFS Transaction History documents built according to the "Weekly" frequency.
- RFS Agent Transaction History Daily: Contains the RFS Transaction History documents built according to the "Daily" frequency.
- RFS Agent Transaction History Hourly: Contains the RFS Transaction History documents built according to the "three times a day" frequency.

F–30 RFS Agent Expired Trades Daily

The RFS Agent Expired Trades Daily zipped document contains one or more organization RFS Expired Trades documents corresponding to the subscriber's agent-affiliated organizations' RFS Expired Trades subscriptions in the "Daily" frequency.

There is only one RFS Agent Expired Trades document:

- RFS Agent Expired Trades Daily: Contains the RFS Expired Trades documents built according to the "Daily" frequency.

F–31 RFS Agent Completed Trades

The RFS Agent Completed Trades zipped document contains one or more organization RFS Completed Trades documents corresponding to the subscriber's agent-affiliated organizations' RFS Completed Trades subscriptions.

There are three distinct RFS Agent Completed Trades documents:

- RFS Agent Completed Trades Daily: Contains the RFS Completed Trades documents built according to the "Daily" frequency.
- RFS Agent Completed Trades Hourly: Contains the RFS Completed Trades documents built according to the "Three times a day" frequency.
- RFS Agent Completed Trades Weekly: Contains the RFS Completed Trades documents built according to the "Weekly" frequency.

F–32 RFS Agent Cancelled Trades

The RFS Agent Cancelled Trades zipped document contains one or more organization RFS Cancelled Trades documents corresponding to the subscriber's agent-affiliated organizations' RFS Cancelled Trades subscriptions.

There are two distinct RFS Agent Cancelled Trades documents:

- RFS Agent Cancelled Trades Daily: Contains the RFS Cancelled Trades documents built according to the "Daily" frequency.

- RFS Agent Cancelled Trades Hourly: Contains the RFS Cancelled Trades documents built according to the "Three times a day" frequency.

F–33 RFS Agent RIN Batches Weekly

The RFS Agent RIN Batches Weekly zipped document contains one or more organization RIN Batches documents corresponding to the subscriber's agent-affiliated organizations' RFS RIN Batches subscriptions in the "Weekly" frequency.

There is only one RFS Agent RIN Batches document:

- RFS Agent RIN Batches Weekly: Contains the RFS RIN Batches documents built according to the "Weekly" frequency.

F–34 RFS Agent Transaction Status

The RFS Agent Transaction Status zipped document contains one or more organization RFS Transaction Status documents corresponding to the subscriber's agent-affiliated organizations' RFS Transaction Status subscriptions.

There are two distinct RFS Agent Transaction Status documents:

- RFS Agent Transaction Status Daily: Contains the RFS Transaction Status documents built according to the "Daily" frequency.
- RFS Agent Transaction Status Hourly: Contains the RFS Transaction Status documents built according to the "Three times a day" frequency.

F–35 Fuels ABT Credit Holdings

The Fuels ABT Credit Holdings document includes the current Fuels ABT credit account holdings, aggregated by the combination of Credit Type and Credit Year.

Table F-35: Data Elements in the Fuels ABT Credit Holdings Document

OrganizationName
OrganizationIdentifier
CreditYear
CreditTypeCode
TotalAvailableFuelsABTCredits
TotalPendingFuelsABTCredits
TotalReservedFuelsABTCredits
TotalFuelsABTCredits
DateRecorded

F–36 Fuels ABT Pending Trade Details

The Fuels ABT Pending Trade Details document lists all details for pending initiated and received Fuels ABT credit trades and includes generating source information. The trades with TradeSource of “Initiated”

show trades that were offered by the organization to their trading partner. When a transaction includes advanced options for credit selection, the originating organization and facility.

Table F-36: Data Elements in the Fuels ABT Pending Trade Details Document

CDXTransactionIdentifier
OrganizationName
OrganizationIdentifier
SubmissionIdentifier
SubmissionDate
ExpirationDate
SubmissionMethod
TransactionIdentifier
TransactionTypeCode
TradeSource
TransactionPartnerOrganizationIdentifier
TransactionPartnerOrganizationName
CreditQuantity
CreditTypeCode
TimesTraded
CreditYear
ReasonCode
TransferDate
PTDNumber
GenerateOrganizationIdentifier
GenerateFacilityIdentifier
SubmissionCommentText
TransactionDetailCommentText
PublicSupportingDocumentText1
PublicSupportingDocumentNumberText1
PublicSupportingDocumentText2

(cont.)

Table F-36: Data Elements in the Fuels ABT Pending Trade Details Document (cont.)

PublicSupportingDocumentNumberText2
SupportingDocumentText1
SupportingDocumentNumberText1
SupportingDocumentText2
SupportingDocumentNumberText2
PublicSupportingPartnerDocumentText1
PublicSupportingPartnerDocumentNumberText1
PublicSupportingPartnerDocumentText2
PublicSupportingPartnerDocumentNumberText2

F–37 Fuels ABT Pending Trades

The Fuels ABT Pending Trades document lists all Fuels ABT credit trades that are in a pending state. Pending trades are buy or sell transactions for which the trading partner has not yet submitted a matching transaction. The trades with TradeSource of “Initiated” show trades that were offered by the organization to their trading partner. When a transaction includes advanced options for credit selection, the originating organization and facility.

Table F-37: Data Elements in the Fuels ABT Pending Trades Document

CDXTransactionIdentifier
OrganizationName
OrganizationIdentifier
SubmissionIdentifier
SubmissionDate
ExpirationDate
SubmissionMethod
TransactionIdentifier
TransactionTypeCode
TradeSource
TransactionPartnerOrganizationIdentifier
TransactionPartnerOrganizationName
CreditQuantity

(cont.)

Table F-37: Data Elements in the Fuels ABT Pending Trades Document (cont.)

TimesTraded
CreditYear
ReasonCode
TransferDate
PTDNumber
GenerateOrganizationIdentifier
GenerateFacilityIdentifier
SubmissionCommentText
TransactionDetailCommentText
PublicSupportingDocumentText1
PublicSupportingDocumentNumberText1
PublicSupportingDocumentText2
PublicSupportingDocumentNumberText2
SupportingDocumentText1
SupportingDocumentNumberText1
SupportingDocumentText2
SupportingDocumentNumberText2
PublicSupportingPartnerDocumentText1
PublicSupportingPartnerDocumentNumberText1
PublicSupportingPartnerDocumentText2
PublicSupportingPartnerDocumentNumberText2

F–38 Fuels ABT Transaction Status

The Fuels ABT Transaction Status document includes all Fuels ABT credit generate, buy, sell, and retire transactions submitted through XML files or online transactions with a status change in the past day.

Table F-38: Data Elements in the Fuels ABT Transaction Status Document

CDXTransactionIdentifier
OrganizationName
OrganizationIdentifier
SubmissionIdentifier
SubmissionDate
SubmissionMethod
TransactionIdentifier
TransactionStatusCode
TransactionStatusDate
TransactionTypeCode
CreditQuantity
CreditTypeCode
TimesTraded
CreditYear
ReasonCode
TransactionPartnerOrganizationIdentifier
TransactionPartnerOrganizationName
TransactionDate or TransferDate
PTDNumber
TradingPartnerPTD
MatchedTransactionIdentifier
MatchingTransactionIdentifier
ExpirationDate
GenerateOrganizationIdentifier
GenerateFacilityIdentifier
CreditStandardCode
AnnualAvgConcentration

(cont.)

Table F-38: Data Elements in the Fuels ABT Transaction Status Document (cont.)

TotalAnnualVolume
SubmissionCommentText
TransactionDetailCommentText
PublicSupportingDocumentText1
PublicSupportingDocumentNumberText1
PublicSupportingDocumentText2
PublicSupportingDocumentNumberText2
SupportingDocumentText1
SupportingDocumentNumberText1
SupportingDocumentText2
SupportingDocumentNumberText2
PublicSupportingPartnerDocumentText1
PublicSupportingPartnerDocumentNumberText1
PublicSupportingPartnerDocumentText2
PublicSupportingPartnerDocumentNumberText2

F–39 Monthly Fuels ABT Credit Holdings

The Monthly Fuels ABT Credit Holdings document is an aggregate view of the total number of Fuels ABT credits held by an organization, grouped by credit type and credit year for every day in the previous month. The total available Fuels ABT credits are the number of credits that can be used for transactions. The total pending Fuels ABT credits are credits that have been designated for a sell transaction that are still pending. These credits are not available for any other transaction until the trade is cancelled, denied, or expired. The total reserved Fuels ABT credits are credits that are associated with a sell or retire transaction that has not been submitted from the EMTS Transaction Bin. These credits cannot be used for any other transactions until the user removes the transaction from the EMTS Transaction Bin. The numbers of total locked Fuels ABT credits are credits that have been locked (by either the industry user or EPA) and cannot be used for any transactions until they are unlocked.

Table F-39: Data Elements in the Monthly Fuels ABT Credit Holdings Document

OrganizationName
OrganizationIdentifier
CreditYear
CreditTypeCode
TotalAvailableFuelsABTCredits
TotalPendingFuelsABTCredits
TotalReservedFuelsABTCredits
TotalFuelsABTCredits
DateRecorded

F–40 Monthly Fuels ABT Transaction History

The Fuels ABT Transaction Status document includes all Fuels ABT credit generate, buy, sell, and retire transactions submitted through XML files or online transactions during the previous calendar month.

Table F-40: Data Elements in the Monthly Fuels ABT Transaction History Document

CDXTransactionIdentifier
OrganizationName
OrganizationIdentifier
SubmissionIdentifier
SubmissionDate
SubmissionMethod
TransactionIdentifier
TransactionStatusCode
TransactionStatusDate
TransactionTypeCode
CreditQuantity
CreditTypeCode
TimesTraded
CreditYear
ReasonCode

(cont.)

Table F-40: Data Elements in the Monthly Fuels ABT Transaction History Document (cont.)

TransactionPartnerOrganizationIdentifier
TransactionPartnerOrganizationName
TransactionDate or TransferDate
PTDNumber
TradingPartnerPTD
MatchedTransactionIdentifier
MatchingTransactionIdentifier
ExpirationDate
GenerateOrganizationIdentifier
GenerateFacilityIdentifier
CreditStandardCode
AnnualAvgConcentration
TotalAnnualVolume
SubmissionCommentText
TransactionDetailCommentText
PublicSupportingDocumentText1
PublicSupportingDocumentNumberText1
PublicSupportingDocumentText2
PublicSupportingDocumentNumberText2
SupportingDocumentText1
SupportingDocumentNumberText1
SupportingDocumentText2
SupportingDocumentNumberText2
PublicSupportingPartnerDocumentText1
PublicSupportingPartnerDocumentNumberText1
PublicSupportingPartnerDocumentText2
PublicSupportingPartnerDocumentNumberText2

Appendix G

EMTS Support

EMTS and EPA Fuels Programs Support Line – Registration, Reporting, and EMTS Technical Support Questions

- EMTS Technical Support
  - support@epamts-support.com
  - (Monday through Friday 9:00 a.m. until 5:00 p.m. ET)

Establishing CDX Login

- CDX Helpdesk
  - helpdesk@epacdx.net
  - 1-888-890-1995, then select Option 1.

NAAS Authentication and Node Questions

- CDX Node Support
  - nodehelpdesk@epacdx.net
  - 1-888-890-1995, then select Option 2.