Smith, Claudia

From: Burns, Bryan <BBurns@linnenergy.com>
Sent: Thursday, December 17, 2015 9:03 AM
To: Smith, Claudia
Cc: Nick Michaelson
Subject: LINN Operating, Inc. Sect. 22 & 23 Synthetic Minor Permit Application Follow-up
Attachments: removed.txt; Section 22 Emissions_TEG Revised.pdf; Section 23 Emissions_TEG Revised.pdf; Catalyst Maintenance

Follow Up Flag: Follow up
Flag Status: Flagged

Hi Claudia,

Per our meeting on 11/24/2015, attached are:

1. The Section 23 facility wide emissions and TEG unit calculations updated using 95% control of the still vent emission
2. The Section 22 facility wide emissions and TEG unit calculations updated using 95% control of the still vent emission
3. An email we received from the engine catalyst manufacturer outlining the recommended monitoring and maintenance procedures
    a. In light of these recommendations, LINN requests to monitor and record the catalyst differential pressure and inlet temperature on a monthly basis
    b. This engine is serviced by a 3rd party contractor and the recommended maintenance will be incorporated into the engines maintenance plan

Do you have a copy of or a link to the "Change of Operator" document we discussed last month? I was able to find one for GHG reporting, but I want to be sure we get you the correct one.

Please let us know if you have any questions or would like to discuss, and I hope you have a Merry Christmas!

Thank You,

Bryan Burns | Environment, Health, and Safety | Direct: 281-840-4033 | Cell: 303-726-8040
Our Values: Embrace & Drive Change - Pursue Growth - Take Action - Respect Others - Be Passionate - Connect

This electronic message, together with any attachments, contains information from LINN Energy that may be confidential and intended solely for the use of the addressee only. If you are not the intended recipient, please note that any disclosure, dissemination, distribution or copying of this message, or any attachment, is strictly prohibited. Also, please notify the original sender by return e-mail and delete the message, along with any attachments, from your computer. Finally, the recipient should check this email and any attachments for the presence of viruses. The organization accepts no liability for any damage caused by any virus transmitted by this email.

Company: Berry Petroleum
Subject: Section 23 Compressor Station
Engine: Facility Emissions Summary

Facility Wide Potential to Emit - Uncontrolled

ID	Unit	NOx	CO	VOC	HAP	CO2	CH4	N2O	CO2e	Bz	Tl	Ebz	Xy	HCOH	nHx
		tpy	tpy	tpy	tpy	tpy	tpy	tpy	tpy	tpy	tpy	tpy	tpy	tpy	tpy
RICE-02	Cat G3516 LE	19.41	34.94	5.56	4.74	7,207	21.87	0.01	7,714	0.020	0.019	-	0.008	3.88	0.050
RICE-03	Cat G3516 LE	19.41	37.65	5.56	4.61	7,078	23.42	0.01	7,620	0.020	0.019	-	0.008	3.75	0.050
HTR-01	Dehy Reboiler	0.09	0.08	0.01	7.08E-05	113.3	0.00	-	113.3	-	-	-	-	7.08E-05	-
DEHY-01	Dehy Still Vent	-	-	10.0	3.7	0.34	1.11	-	13.7	2.77	0.36	0.00	0.00	-	0.59
T1-T2	Condensate Tanks	-	-	3.95	0.160	0.08	2.30	-	52.9	0.0112	0.006	0.0003	0.0009	-	0.011
Cload	Condensate Loading	-	-	0.75	0.006	0.010	0.054	-	1.25	0.0004	0.0004	0.00004	0.0001	-	0.005
CBD	Compressor Blowdown	-	-	4.17	0.18	0.17	12.46	-	286.8	0.012	0.01	0.002	0.01	-	0.14
CRPV	Rod Packing Vents	-	-	6.09	0.26	0.25	18.20	-	418.8	0.02	0.02	0.003	0.01	-	0.21
STR	Starter Gas	-	-	0.50	0.02	0.02	1.49	-	34.2	0.0014	0.0016	0.0002	0.0008	-	0.02
Total		**38.91**	**72.67**	**36.62**	**13.70**	**14,399**	**80.90**	**0.02**	**16,254**	**2.85**	**0.43**	**0.01**	**0.04**	**7.63**	**1.08**
FUG	Fugitive Leaks	-	-	6.20	0.14	0.15	8.96	-	206	0.01	0.01	0.001	0.005	-	0.12
Total		**38.91**	**72.67**	**42.82**	**13.84**	**14,399**	**89.86**	**0.02**	**16,461**	**2.86**	**0.44**	**0.01**	**0.04**	**7.63**	**1.20**

Facility Wide Potential to Emit - Controlled

ID	Unit	NOx	CO	VOC	HAP	CO2	CH4	N2O	CO2e	Bz	Tl	Ebz	Xy	HCOH	nHx
		tpy	tpy	tpy	tpy	tpy	tpy	tpy	tpy	tpy	tpy	tpy	tpy	tpy	tpy
RICE-02	Cat G3516 LE	19.41	34.94	5.56	4.74	7,207	21.87	0.01	7,714	0.020	0.019	-	0.008	3.88	0.050
RICE-03	Cat G3516 LE	19.41	37.65	5.56	4.61	7,078	23.42	0.01	7,620	0.020	0.019	-	0.008	3.75	0.050
HTR-01	Dehy Reboiler	0.09	0.08	0.01	7.08E-05	113.3	0.00	-	113.3	-	-	-	-	7.08E-05	-
DEHY-01	Dehy Still Vent	Combustor Controlled				Combustor Controlled				Combustor Controlled					
C1	Dehy Still Combustor	0.05	0.04	0.94	0.35	21.6	0.06	-	22.9	0.26	0.03	0.0002	0.000	-	0.056
T1-T2	Condensate Tanks	-	-	5.88	0.27	0.13	3.96	-	91.3	0.0191	0.010	0.00046	0.0014	-	0.240
Cload	Condensate Loading	-	-	1.31	0.011	0.017	0.095	-	2.19	0.00	0.00	0.0001	0.000	-	0.01
CBD	Compressor Blowdown	-	-	4.17	0.18	0.17	12.46	-	286.8	0.012	0.013	0.002	0.006	-	0.14
CRPV	Rod Packing Vents	-	-	6.09	0.26	0.25	18.20	-	418.8	0.02	0.02	0.0026	0.009	-	0.21
STR	Starter Gas	-	-	0.50	0.02	0.02	1.49	-	34.2	0.0014	0.0016	0.00021	0.0008	-	0.02
Total		**38.96**	**72.71**	**30.04**	**10.45**	**14,421**	**81.55**	**0.02**	**16,303**	**0.35**	**0.12**	**0.005**	**0.04**	**7.63**	**0.78**
FUG	Fugitive Leaks	-	-	6.20	0.14	0.15	8.96	-	206	0.01	0.01	0.0014	0.005	-	0.12
Total		**38.96**	**72.71**	**30.36**	**10.32**	**14,421**	**86.55**	**0.02**	**16,418**	**0.34**	**0.12**	**0.006**	**0.04**	**7.63**	**0.66**

Company:	Berry Petroleum
Subject:	Section 23 Compressor Station
Source:	**[POST-CHANGE]** TEG Unit Still Vent (Flash tank routed to facility inlet)

Capacity (site rating) (MMscf/day):	12
Pump Rate (site rating) (gpm):	3.50
Hours/year:	8,760
Condenser flowrate (scfh):	266

Pollutant	Control Device Description	Control Efficiency[a]	Still Vent Emission Factor[b]	Estimated Emissions[c]		
		(% Reduction)	Uncontrolled Basis	Controlled	Uncontrolled	Controlled
			lb/hr	lb/hr	tpy	tpy
CRITERIA & GHGs						
VOC	Combustor	95%	4.31	2.16E-01	1.89E+01	9.44E-01
CO2			0.08	7.73E-02	3.39E-01	2.16E+01
CH4	Combustor	95%	0.25	1.27E-02	1.11E+00	5.56E-02
CO2e					2.59E+01	2.29E+01
TRACE ORGANICS						
n-Hexane	Combustor	95%	2.54E-01	1.27E-02	1.11E+00	5.57E-02
2,2,4-Trimethylpentane	Combustor	95%	7.36E-05	3.68E-06	3.22E-04	1.61E-05
Benzene	Combustor	95%	1.19E+00	5.93E-02	5.20E+00	2.60E-01
Toluene	Combustor	95%	1.53E-01	7.65E-03	6.70E-01	3.35E-02
Ethylbenzene	Combustor	95%	8.87E-04	4.44E-05	3.89E-03	1.94E-04
Xylenes	Combustor	95%	1.88E-03	9.41E-05	8.24E-03	4.12E-04
					Total HAP	0.35

Notes: (a) Control efficiency assumed at 95%

(b) Emission factors based on ProMax, V3.2

Uncontrolled factors represent POST-CHANGE (i.e. with enforceable controls) emissions

(c) Controlled CH4 and VOC is assumed to convert to CO2; ratio of 3.143:1 and 1:1, respectively

Smith, Claudia

From: Burns, Bryan <BBurns@linnenergy.com>
Sent: Friday, November 13, 2015 12:14 PM
To: Smith, Claudia
Cc: Nick Michaelson
Subject: RE: Proposed Synthetic Minor NSR Permits for Berry Petroleum Section 22 and 23 Compressor Stations

Thanks Claudia,

We look forward to discussing in person in a few weeks!

Best,
Bryan

From: Smith, Claudia [mailto:Smith.Claudia@epa.gov]
Sent: Friday, November 13, 2015 1:13 PM
To: Burns, Bryan
Cc: Nick Michaelson
Subject: RE: Proposed Synthetic Minor NSR Permits for Berry Petroleum Section 22 and 23 Compressor Stations

Bryan,

Here are my primary questions regarding LINN's comments on the proposed SMNSR permits for the Section 22 and Section 23 Compressor Stations:

1. We interpreted the applications from Berry Petroleum to request enforceable requirements for 98% VOC destruction efficiency for the dehydrators. Was that a correct interpretation of the applications that were submitted and LINN is now revising the requested limitation to 95% VOC destruction efficiency, or did the EPA misinterpret the applications?
2. We interpreted the application from Berry Petroleum for the Section 22 Compressor Station to be requesting engine emission limits that are significantly lower than the limits in NSPS JJJJ to reflect operation of oxidation catalyst. Berry proposed to follow NSPS JJJJ requirements to demonstrate compliance with those lower emission limits. According to the manufacturer specifications provided in the application, the engine is capable of meeting the NSPS JJJJ emission limits without operation of emission controls. Is LINN now requesting emission limits in line with NSPS JJJJ?

Thank you and see you on Tuesday, November 24th.

Claudia

Claudia Young Smith
Environmental Scientist
US EPA Region 8 Air Program
Phone: (303) 312-6520
Fax: (303) 312-6064
http://www2.epa.gov/caa-permitting/caa-permitting-epas-mountains-and-plains-region
****
US EPA Region 8

1595 Wynkoop Street
Mail Code 8P-AR
Denver, Colorado 80202
****
This transmission may contain deliberative, attorney-client, attorney work product or otherwise privileged material. Do not release under FOIA without appropriate review. If this message has been received by you in error, you are instructed to delete this message from your machine and all storage media whether electronic or hard copy.

From: Burns, Bryan [mailto:BBurns@linnenergy.com]
Sent: Monday, November 09, 2015 10:05 AM
To: Smith, Claudia
Cc: Nick Michaelson
Subject: RE: Proposed Synthetic Minor NSR Permits for Berry Petroleum Section 22 and 23 Compressor Stations

Much appreciated Claudia. We will look forward to seeing you then!

Best,
Bryan Burns

From: Smith, Claudia [mailto:Smith.Claudia@epa.gov]
Sent: Monday, November 09, 2015 10:55 AM
To: Burns, Bryan
Cc: Nick Michaelson
Subject: RE: Proposed Synthetic Minor NSR Permits for Berry Petroleum Section 22 and 23 Compressor Stations

Yes, Tuesday November 24th at 2:00 pm works for me. I will work on a list of questions by the end of this week.

Thanks,

Claudia

From: Burns, Bryan [mailto:BBurns@linnenergy.com]
Sent: Monday, November 09, 2015 9:53 AM
To: Smith, Claudia
Cc: Nick Michaelson
Subject: RE: Proposed Synthetic Minor NSR Permits for Berry Petroleum Section 22 and 23 Compressor Stations

Thanks Claudia! Would 2pm on Tuesday afternoon work? If so, I will send out a meeting invite once I confirm with Nick. Also, can you provide a list of questions beforehand?

Best,
Bryan

From: Smith, Claudia [mailto:Smith.Claudia@epa.gov]
Sent: Monday, November 09, 2015 10:45 AM
To: Burns, Bryan
Cc: Nick Michaelson
Subject: RE: Proposed Synthetic Minor NSR Permits for Berry Petroleum Section 22 and 23 Compressor Stations

Hi, Bryan,

I will be in the office Monday and Tuesday November 23-24. The afternoon is best for me on Monday. I am fairly open on Tuesday.

Thanks,

Claudia

From: Burns, Bryan [mailto:BBurns@linnenergy.com]
Sent: Monday, November 09, 2015 9:10 AM
To: Smith, Claudia
Cc: Nick Michaelson
Subject: RE: Proposed Synthetic Minor NSR Permits for Berry Petroleum Section 22 and 23 Compressor Stations

Claudia,

Thank you for being available to meet! What does your schedule look like before Thanksgiving, Mon.-Wed. November 23-25th? I will be in town those days and would be happy to come down to your office to answer questions. If you have a list of questions you can provide ahead of time, we will make sure to have answers for you to discuss at our meeting.

Thanks again,
Bryan Burns

From: Smith, Claudia [mailto:Smith.Claudia@epa.gov]
Sent: Monday, November 02, 2015 5:16 PM
To: Burns, Bryan
Cc: Nick Michaelson
Subject: RE: Proposed Synthetic Minor NSR Permits for Berry Petroleum Section 22 and 23 Compressor Stations

Mr. Burns,

After reviewing LINN's comments on the proposed SMNSR permits for the Sections 22 and 23 Compressor Stations, I do have some clarifying questions. You offered to meet in person at EPA's offices to discuss in person. If you would prefer to do that than have the discussions over email, please let me know some days/times that might work for you.

Thank you,

Claudia

From: Smith, Claudia
Sent: Tuesday, October 20, 2015 8:06 AM
To: 'Nick Michaelson'
Cc: Burns, Bryan (BBurns@linnenergy.com)
Subject: RE: Proposed Synthetic Minor NSR Permits for Berry Petroleum Section 22 and 23 Compressor Stations

Mr. Michaelson,

The comments were received before the end of the public comment period. You will receive a response to the comments with issuance of the final permits.

Thank you,

Claudia Young Smith
Environmental Scientist
US EPA Region 8 Air Program
Phone: (303) 312-6520
Fax: (303) 312-6064
http://www2.epa.gov/caa-permitting/caa-permitting-epas-mountains-and-plains-region
****
US EPA Region 8
1595 Wynkoop Street
Mail Code 8P-AR
Denver, Colorado 80202
****
This transmission may contain deliberative, attorney-client, attorney work product or otherwise privileged material. Do not release under FOIA without appropriate review. If this message has been received by you in error, you are instructed to delete this message from your machine and all storage media whether electronic or hard copy.

From: Nick Michaelson [mailto:Nick.Michaelson@erm.com]
Sent: Monday, October 19, 2015 4:44 PM
To: Smith, Claudia
Cc: Burns, Bryan (BBurns@linnenergy.com)
Subject: RE: Proposed Synthetic Minor NSR Permits for Berry Petroleum Section 22 and 23 Compressor Stations

Ms. Smith,

LINN Operating, Inc. submits the attached draft permit comments for the Section 22 and Section 23 tribal new source review permits currently out for public comment.

Should you or your colleagues have any questions regarding the intention or reasoning behind the attached comments, please do not hesitate to contact Bryan Burns at 303-999-4245 or bburns@linnenergy.com. If agreeable to EPA, LINN would also like to offer to meet with EPA in person at their offices to discuss any questions that do arise.

Thank You,

Nick Michaelson
Chemical Engineer
Air Quality

ERM
123 North College Ave.
Suite 370
Fort Collins, CO 80524
970.492.6276
nick.michaelson@erm.com

LINN Energy
NASDAQ:LINE
NASDAQ:LNCO

600 Travis Street, Suite 5100
Houston, Texas 77002
Phone: (281) 840-4000
Fax: (281) 840-4001

October 19, 2015

Claudia Smith
Tribal NSR Permit Contact
c/o Air Program (8P-AR)
U.S. EPA, Region 8
1595 Wynkoop Street
Denver, Colorado 80202

Re: Comments on SMNSR Permit for the LINN Operating, Inc. (formerly Berry Petroleum) Section 23 Compressor Station

Dear Ms. Smith:

LINN Operating, Inc. (LINN) has reviewed the referenced public notice draft Section 23 compressor station air synthetic minor new source review permit (#SMNSR-UO-000877-2014.001). LINN's comments, provided in sequence with respect to terms and conditions of the permit, are attached.

If you have any questions, please contact me at your convenience.

Sincerely,

Bryan Burns
Senior EHS Representative

Comments to Synthetic Minor Source Permit to Construct #SMNSR-UO-000877-2014.001 submitted for public comment September 17, 2015.

COMMENTS

Section I.A: General Information

Comment #1: All permit references to "Berry Petroleum Company, LLC" should be changed to "LINN Operating, Inc."

All permit references to LINN Operating, Inc. office location should be changed to

600 Travis, Suite 5100
Houston, Texas 77002

Basis #1: At the time the permit application was submitted, Berry Petroleum Company, LLC had recently been purchased by LINN Operating, Inc. During the transition the name "Berry Petroleum Company, LLC" was retained, but its use has since been discontinued. The office location has also changed from Denver to Houston.

Section I.C: Requirements for the TEG Dehydration System

Condition I.C.2.(b)

Comment #2: Suggest adding specificity to indicate the intention of the requirement as follows:

"*Emission limits shall apply at all times,* ***as demonstrated by the monthly and rolling 12-month emission records,*** *unless otherwise specified in this permit*"

Basis #2: The phrase "at all times" has the potential to be interpreted as a single minute of data demonstrating an exceedance of the emission limit is an indication of non-compliance. The condition must necessarily allow for fluctuations in operation of the unit such that over a period (e.g. monthly) emissions can be averaged.

Condition I.C.3.(b)

Comment #3: LINN request revision of the requirement language as follows:

"Prior to 12 full months of VOC and total HAP emissions calculations, the Permittee must, within seven (7) calendars days of the end of each month , add the emissions for that month to the calculated emissions for all previous months ~~since production commenced~~ ***the permit effective date*** *and record the total. Thereafter, the Permittee must, within seven (7) calendars days of the end of each month, add the emissions for that month to the calculated emissions for the preceding 11 months and record a new 12-month total."*

Basis #3: This is an existing facility and records required by the permit should not begin until the permit effective date.

Condition I.C.3.(c)

Comment #4: LINN request revision of the requirement language as follows:

"VOC and total HAP emissions shall be calculated, in tons, ***using any generally accepted simulation model or software*** *~~GRI-GLYCalcTM Version 4.0 or higher~~. Inputs to the model shall be representative of actual* ***average monthly*** *operating conditions of the glycol dehydration unit and may be determined using the procedures documented in the Gas Research Institute (GRI) report entitled "Atmospheric Rich/Lean Method for Determining Glycol Dehydrator Emissions" (GRI-95/0368.1)."*

Basis #4: The emission estimates LINN provided in the permit application and which form the basis of the emission limits for the TEG unit in the permit were calculated using ProMax process simulation software. This same emission estimation procedure should be followed in determining compliance with the emission limits.

If EPA disagrees with the use of other emission estimation models or software packages, this would necessitate re-evaluation of the emission estimates provided in the permit application and permit limits based on these estimates prior to the permit being issued.

Condition I.C.4.(a)

Comment #5: LINN request revision of the requirement language to specify the TEG still vent is the process vent being controlled as follows:

"The Permittee shall route all emissions from the TEG dehydration system ~~process~~ ***still*** *vent through a closed-vent system to an enclosed combustion device designed and operated as specified in this permit."*

Basis #5: The unit also has a flash separator with emissions directed to the facility inlet separator. To avoid any potential confusion, the controlled process stream should be specified.

Condition I.C.4.(b)

Comment #6: LINN requests the reference to 40 CFR 63.771(c) be replaced with the following, such that the requirement reads:

"The Permittee shall design, install, continuously operate, and maintain the closed-vent system such that it is compliant with the ***following*** *closed-vent system requirements****:*** *~~at 40 CFR 63.771(c)~~*

(1) The closed-vent system shall route all gases, vapors, and fumes emitted from the still vent to the enclosed combustor.

(2) The closed-vent system shall be designed and operated with no detectable emissions.

(3) If the closed-vent system contains one or more bypass devices that could be used to divert all or a portion of the gases, vapors, or fumes from entering the control device, the owner or operator shall meet the following requirements:

(i) For each bypass device (except for low leg drains, high point bleeds, analyzer vents, open-ended valves or lines, and safety devices) the owner or operator shall either:

(A) At the inlet to the bypass device that could divert the stream away from the control device to the atmosphere, properly install, calibrate, maintain, and operate a flow indicator that is capable of taking periodic readings and sounding an alarm when the bypass device is open such that the stream is being, or could be, diverted away from the control device to the atmosphere; or

(B) Secure the bypass device valve installed at the inlet to the bypass device in the non-diverting position using a car-seal or a lock-and-key type configuration.*"*

Basis #6: Reliance on a reference to a federal regulation which has the potential for challenge and rule changes. LINN should not be subject to changing requirements in their permit. Referencing regulatory citations as opposed to actual requirements also creates the potential for ambiguity (e.g. if the referenced section references other portions of the rule, are these other sections to apply?), which specifying the requirements in the permit will avoid.

Additionally, the request and language LINN has proposed is similar to permit #SMNSR-SU-000031-2011.001EPA issued to Samsun Resources Company on January 9, 2015 [Condition I.E.3.(b)].

Condition I.C.4.(c)

Comment #7: LINN requests revision of the requirement language to specify the TEG still vent is the process vent being controlled as follows:

"The Permittee shall design, install, continuously operate, and maintain an enclosed combustion device such that the mass content of the uncontrolled emissions of VOC and total HAP from the TEG dehydration system ~~process~~ ***still*** *vent are reduced by at least 98% by weight."*

Basis #7: The unit also has a flash separator with emissions directed to the facility inlet separator. To avoid any potential confusion, the controlled process stream should be specified.

General comment on TEG still vent control efficiency
[Condition I.C.4.(c) and Condition I.C.5(a) and (b)]

Comment #8: LINN proposes to revise the enforceable control efficiency for the TEG unit still vent enclosed combustor to 95% consistent with the requirement of the CAFO and remove the performance testing requirements for the enclosed combustor.

*"The Permittee shall design, install, continuously operate, and maintain an enclosed combustion device such that the mass content of the uncontrolled emissions of VOC and total HAP from the TEG dehydration system still vent are reduced by at least ~~98%~~ **95%** by weight."*

~~(a) "The Permittee shall demonstrate that the enclosed combustion device achieves 98% VOC and total HAP emissions destruction efficiency and meets the VOC and total HAP emissions limits in this permit by conducting performance tests of the enclosed combustion device in accordance with the procedures specified in this permit:~~

~~(i)An initial performance test shall be conducted within 180 days after the effective date of this permit;~~
~~(ii)Subsequent performance tests of the enclosed combustion device shall be conducted every 36 months thereafter in accordance with the procedures specified in this permit. Subsequent performance tests are not required for enclosed combustion devices that are model tested under and meet the criteria of~~
~~40 CFR 63.772(h);~~
~~(iii) If the enclosed combustion device is repaired or replaced, the Permittee shall either conduct a performance test on the repaired or replaced unit within 180 days of starting operations of the repaired or replaced unit, or the unit shall be model tested by the manufacturer under and meeting the criteria of 40 CFR 63.772(h).~~

~~(b) The Permittee shall demonstrate that the enclosed combustion device achieves 98% VOC and total HAP emissions destruction efficiency and meets the VOC and total HAP emissions limits in this permit using the following performance test methods and procedures:~~

~~(i) Method 1 or 1A, as appropriate for the selection of the sampling sites, as specified in 40 CFR 63.772(e)(3)(i);~~
~~(ii)Method 2, 2A, 2C, or 2D, of 40 CFR part 60, Appendix A to determine gas volumetric flowrate, as specified in 40 CFR 63.772(e)(3)(ii); and~~
~~(iii)Method 18 at 40 CFR Part 60, Appendix A, Method 25A at 40 CFR Part 60, Appendix A, ASTM D6420-99 (2004), or any other method or data that have been validated according to the applicable procedures in Method 301 at~~
~~40 CFR Part 63, Appendix A, to determine compliance with the 98% VOC and total HAP emissions destruction efficiency requirement"~~

Basis #8: The Messco VOCinerator LINN has installed to control the TEG still vent has a manufacturer guaranteed control efficiency of greater than 99%. The 98% control efficiency was used in accordance with the Utah Department of Air Quality default control efficiency for enclosed combustors. However, LINN will accept 95% control efficiency to streamline the emissions demonstration burden and remove the requirement to conduct a performance test of the combustor.

Additionally, this request is consistent with permit #SMNSR-SU-000031-2011.001EPA issued to Samsun Resources Company on January 9, 2015 [Condition I.E.4]. In that permit, Samsun was allowed a 98% control efficiency for their combustor and was not required to conduct a performance test provided the combustor was a manufacturer tested device. As noted above, the Messco VOCinerator LINN has installed is currently pending approval from EPA for certification as a manufacturer tested device.

Condition I.C.5.(c)

Comment #9: LINN requests revision of the permit condition to allow for sampling at the facility inlet separator:

"The Permittee shall perform testing of the inlet wet gas stream to the TEG dehydration system (extended wet gas analysis) at least once every consecutive 12-month period. ***Alternatively, wet gas from the facility inlet separator can be taken for use in a process simulation software package.*** *The analysis shall include the inlet gas temperature and pressure at which the sample was taken"*

Basis #9: The emission estimates provided in the permit application were calculated using ProMax process simulation software which used a facility inlet separator wet gas sample as the basis for the simulation. This same estimation methodology should be allowed to demonstrate continued compliance with the permit limits.

If EPA disagrees with the use of the facility inlet separator sample and subsequent emission estimation basis included in the permit application, this would necessitate re-evaluation of the emission estimates provided in the permit application and permit limits based on these estimates prior to the permit being issued.

Condition I.C.6.(c)

Comment #10: LINN requests the reference to 40 CFR 63.773(c) be replaced with the following, such that the requirement reads:

"The Permittee shall monitor each closed vent system for leaks of hydrocarbon emissions from all vent lines, connections, fittings, valves, relief valves, or any other appurtenance employed to contain, collect, and transport gases, vapors, and fumes to the enclosed combustion devices as follows:

> *(i) Visit the facility on a quarterly basis to inspect all closed vent systems for defects that could result in air emissions and document each inspection. Defects include, but are not limited to, visible cracks, holes, or gaps in piping; loose connections; or broken or missing caps or other closure devices. If a quarterly visit is not feasible due to sudden, infrequent, and unavoidable events (i.e., weather, road conditions), every effort shall be made to visit the facility as close to quarterly as possible;*
>
> *(ii) The inspections shall be based on audio, visual, and olfactory procedures; and*
>
> *(iii) Any leaks detected in any closed vent system shall be addressed immediately unless the repair requires resources not currently available. If the resources are not available, the leak shall be repaired no later than 15 days after initial detection of the leak."*

Basis #10: Reliance on a reference to a federal regulation which has the potential for challenge and rule changes. LINN should not be subject to changing requirements in their permit. Referencing regulatory citations as opposed to actual requirements also creates the potential for

ambiguity (e.g. if the referenced section references other portions of the rule, are these other sections to apply?), which specifying the requirements in the permit will avoid.

Additionally, the request and language LINN has proposed is consistent with permit #SMNSR-SU-000031-2011.001EPA issued to Samsun Resources Company on January 9, 2015 [Condition I.E.5.(a].

Condition I.C.6.(d)

Comment #11: LINN requests revision of the requirement language as follows:

"*The Permittee shall ~~install~~ operate and maintain a meter that continuously measures the natural gas flowrate ~~to~~* ***from*** *the TEG dehydration system~~ with an accuracy of plus or minus 2% or better~~ . The meter shall be inspected on a monthly basis to ensure proper operation per the manufacturer's specifications*."

Basis #11: The referenced GRI-GLYCalcTM model EPA has included in the permit requires dry gas flowrate as the model input, not TEG inlet flowrate. All gas at the facility is sent through the TEG unit and is metered currently at the outlet of the unit. LINN is requesting to utilize their current systems to demonstrate compliance for this existing facility. The sales meter LINN currently operates is used for financial tracking of gas produced and is maintained for accuracy, no additional stipulations on the meter should be required.

Additionally, other permits issued by EPA Region 8 with conditions for other TEG units or amine contactors do not include such a flow meter requirement (e.g. permit #SMNSR-SU-000031-2011.001 and SMNSR-SU-0000102011.001).

Condition I.C.6.(f)

Comment #12: LINN requests removal the condition:

"~~*The Permittee shall determine the monthly and rolling 12-month VOC and total HAP emissions using the model GRI-GLYCalcTM , Version 4.0 or higher, and the procedures presented in the associated GRI-GLYCalcTM Technical Reference Manual.*~~"

Basis #12: This condition is redundant with condition I.C.3.(c).

Condition I.C.7.(a)(v)

Comment #13: LINN requests the reference to 40 CFR 63.774 be replaced with the following, such that the requirement reads:

"~~(v) *All records required for the glycol dehydration unit, the closed vent system, and control device specified in 40 CFR 63.774 , as appropriate; and*~~"

(v) Monitoring system breakdowns or other events that result in invalid data, maintenance, repairs

(vi) The date, time and length of any events in which the still vent stream was bypassing the control device or was not otherwise controlled
(vii) Inspections of the closed vent system, control device, and any defects observed and the corrective action taken
(viii) Maintenance conducted on the control device

Basis #13: Reliance on a reference to a federal regulation which has the potential for challenge and rule changes. LINN should not be subject to changing requirements in their permit. Referencing regulatory citations as opposed to actual requirements also creates the potential for ambiguity (e.g. if the referenced section references other portions of the rule, are these other sections to apply?), which specifying the requirements in the permit will avoid.

From: Smith, Claudia [mailto:Smith.Claudia@epa.gov]
Sent: Wednesday, September 16, 2015 2:14 PM
To: Burns, Bryan (BBurns@linnenergy.com)
Cc: Nick Michaelson; Minnie Grant; brucep@utetribe.com; Rothery, Deirdre; Siffring, Stuart; North, Alexis
Subject: Proposed Synthetic Minor NSR Permits for Berry Petroleum Section 22 and 23 Compressor Stations

I have attached the requested proposed permits, the accompanying technical support documents, and the bulletin board notice for the Section 22 and Section 23 Compressor Stations. We will also be posting the application, proposed permit, technical support document, and other supporting information in PDF format on our website at http://www2.epa.gov/region8/air-permit-public-comment-opportunities by the start of the public comment period.

In accordance with the regulations at 40 CFR 49.157, we are providing a period from September 17, 2015 to October 19, 2015 for public comment on these proposed permits. Comments must be received by 5:00pm MST October 19, 2015, to be considered in the issuance of the final permits.

Please submit any written comments you may have concerning the terms and conditions of these permits. You can send them directly to me at smith.claudia@epa.gov, or to r8airpermitting@epa.gov. Should the EPA not accept any or all of these comments, you will be notified in writing and will be provided with the reasons for not accepting them.

Thank you,

Claudia Young Smith
Environmental Scientist
US EPA Region 8 Air Program
Phone: (303) 312-6520
Fax: (303) 312-6064
http://www2.epa.gov/region8/air-permitting

****
US EPA Region 8
1595 Wynkoop Street
Mail Code 8P-AR
Denver, Colorado 80202
****
This transmission may contain deliberative, attorney-client, attorney work product or otherwise privileged material. Do not release under FOIA without appropriate review. If this message has been received by you in error, you are instructed to delete this message from your machine and all storage media whether electronic or hard copy.

This message contains information which may be confidential, proprietary, privileged, or otherwise protected by law from disclosure or use by a third party. If you have received this message in error, please contact us immediately at (303) 741-5050 and take the steps necessary to delete the message completely from your computer system. Thank you.

Please visit ERM's web site: http://www.erm.com

This electronic message, together with any attachments, contains information from LINN Energy that may be confidential and intended solely for the use of the addressee only. If you are not the intended recipient, please note that any disclosure, dissemination, distribution or copying of this message, or any attachment, is strictly prohibited. Also, please notify the original sender by return e-mail and delete the message, along with any attachments, from your computer. Finally, the recipient should check this email and any attachments for the

presence of viruses. The organization accepts no liability for any damage caused by any virus transmitted by this email.
This electronic message, together with any attachments, contains information from LINN Energy that may be confidential and intended solely for the use of the addressee only. If you are not the intended recipient, please note that any disclosure, dissemination, distribution or copying of this message, or any attachment, is strictly prohibited. Also, please notify the original sender by return e-mail and delete the message, along with any attachments, from your computer. Finally, the recipient should check this email and any attachments for the presence of viruses. The organization accepts no liability for any damage caused by any virus transmitted by this email.
This electronic message, together with any attachments, contains information from LINN Energy that may be confidential and intended solely for the use of the addressee only. If you are not the intended recipient, please note that any disclosure, dissemination, distribution or copying of this message, or any attachment, is strictly prohibited. Also, please notify the original sender by return e-mail and delete the message, along with any attachments, from your computer. Finally, the recipient should check this email and any attachments for the presence of viruses. The organization accepts no liability for any damage caused by any virus transmitted by this email.
This electronic message, together with any attachments, contains information from LINN Energy that may be confidential and intended solely for the use of the addressee only. If you are not the intended recipient, please note that any disclosure, dissemination, distribution or copying of this message, or any attachment, is strictly prohibited. Also, please notify the original sender by return e-mail and delete the message, along with any attachments, from your computer. Finally, the recipient should check this email and any attachments for the presence of viruses. The organization accepts no liability for any damage caused by any virus transmitted by this email.

Public Notice: Request For Comments

Proposed Air Quality Permit to Construct Berry Petroleum Company, LLC Sections 22 and 23 Compressor Stations

Notice issued: September 17, 2015

Written comments due:
5 p.m., October 19, 2015

Where are the facilities located?
Uintah and Ouray Indian Reservation

Section 22 Compressor Station: Near Brundage Canyon in Duchesne County, Utah
Latitude 40.01836 N
Longitude -110.19814 W

Section 23 Compressor Station: Near Brundage Canyon in Duchesne County, Utah
Latitude 40.02993 N
Longitude -110.40752

What is being proposed?
These permit actions will apply to two existing facilities operating on the Uintah and Ouray Indian Reservation in Utah.

The facilities are designed to compress and dehydrate natural gas received from nearby production wells. The facilities are currently subject to enforceable emission limitations for two (2) existing tri-ethylene glycol dehydration units (one at each facility), which were established through a September 24, 2013 federal combined complaint and Consent Agreement Final Order (CAFO) between the EPA and Berry Petroleum Company (Docket No. CAA-08-2013-0014). 40 CFR 49.153(a)(3)(iv) and 49.158 of the Tribal Minor New Source Review (MNSR) Permit Program provide the EPA with the authority to transfer CAFO emission limits to a MNSR permit so that they may apply permanently after expiration or termination of a CD and to issue permits with enforceable requirements that a source has requested to voluntarily accept. Berry has requested enforceable limits on the dehydrators that are more stringent that those in the CAFO, and has also requested enforceable limits for a compressor engine at the Section 22 Compressor Station for emission control equipment that is installed and currently being operated voluntarily. The permits the EPA is proposing to issue reflect the incorporation of the requirements established in the CAFO and the additional requested requirements.

Proposed Permit Requirements:
The permits propose requirements to route emissions from the still vents of the existing dehydrators (one at each facility) and limit their emissions of volatile organic compounds (VOC) and hazardous air pollutants (HAP). The permit for the Section 22 Compressor Station also proposes requirements to install and operate emission controls on one compressor engine and limit its emissions of carbon monoxide, VOC, and formaldehyde.

What are the effects on air quality?
These actions will have no adverse air quality impacts. The emissions at these existing facilities will not be increasing due to these permit actions. In addition, these actions do not authorize the construction of any new emission sources, or emission increases from existing sources, nor do the otherwise authorize any other physical modifications to the facilities or their operations.

Where can I send comments?
EPA accepts comments by mail, fax and e-mail.

US EPA Region 8 Air Program, 8P-AR
Attn: Federal Minor NSR Coordinator
1595 Wynkoop Street,
Denver, CO 80202
R8AirPermitting@epa.gov
Fax: 303-312-6064

How can I review documents?
You can review a paper or electronic copy of the proposed permits and related documents at the following locations:

Ute Indian Tribe Energy and Minerals Department Office
910 South 7500 East
Fort Duchesne, Utah 84026
Attn: Bruce Pargeets, Acting Energy, Mineral, and Air Director
or brucep@utetribe.com

US EPA Region 8 Office:
1595 Wynkoop Street, Denver, CO 80202
Hours: Mon-Fri 8:00 a.m. – 5:00 p.m.
Contact: Claudia Smith at 303-312-6520
or smith.claudia@epa.gov

US EPA Region 8 Website:
http://www2.epa.gov/region8/air-permit-public-comment-opportunities

Permit numbers:
Section 22 Compressor Station
SMNSR-UO-000876-2014.001
Section 23 Compressor Station
SMNSR-UO-000877-2014.001

What happens next?
The EPA will review and consider all comments received during the comment period. Following this review, the EPA may issue the permits as proposed, issue modified permits based on comments, or deny the permits.

Tribal Minor New Source Review in Indian Country

United States Environmental Protection Agency

Region 8
Air Program
1595 Wynkoop Street
Denver, CO 80202
Phone 800-227-8917

www.epa.gov/region8

UNITED STATES ENVIRONMENTAL PROTECTION AGENCY
REGION 8
1595 Wynkoop Street
Denver, CO 80202-1129
Phone 800-227-8917
www.epa.gov/region08

Ref: 8P-AR

Bryan O. Burns
EHS Representative
Berry Petroleum Company
1999 Broadway, Suite 3700
Denver, Colorado 80202

SEP 7 2015

Re: Berry Petroleum Company, LLC, Section 23 Compressor Station
Permit # SMNSR-UO-000877-2014.001
Proposed Synthetic Minor New Source Review Permit

Dear Mr. Burns:

The U.S. Environmental Protection Agency Region 8 has completed its review of Berry Petroleum Company, LLC's application requesting a synthetic minor permit pursuant to the Tribal Minor New Source Review (MNSR) Permit Program at 40 CFR Part 49 for the Section 23 Compressor Station.

Enclosed are the proposed permit and the corresponding technical support document. The regulations at 40 CFR 49.157 require that the affected community and the general public have the opportunity to submit written comments on any proposed MNSR permit. All written comments submitted within thirty (30) calendar days after the public notice is published will be considered by the EPA in making its final permit decision. Enclosed is a copy of the public notice which will be published on the EPA's website located at: http://www2.epa.gov/region8/air-permit-public-comment-opportunities, on September 17, 2015. The public comment period will end at 5:00 p.m. on October 19, 2015.

The conditions contained in the proposed permit will become effective and enforceable by the EPA if the permit is issued final. If you are unable to accept any term or condition of the draft permit, please submit your written comments, along with the reason(s) for non-acceptance to:

Tribal NSR Permit Contact
c/o Air Program (8P-AR)
U.S. EPA, Region 8
1595 Wynkoop Street
Denver, Colorado 80202

or

R8AirPermitting@epa.gov

Printed on Recycled Paper

If you have any questions concerning the enclosed proposed permit or technical support document, please contact Claudia Smith of my staff at (303) 312-6520.

Sincerely,

Darcy O'Connor
Acting Assistant Regional Administrator
Office of Partnerships and Regulatory Assistance

Enclosures

Cc:

Bruce Pargeets, Acting Director, Energy, Minerals and Air, Ute Indian Tribe
Minnie Grant, Air Coordinator, Energy, Minerals, and Air, Ute Indian Tribe
Honorable Shaun Chapoose, Chairman, Ute Indian Business Committee (w/o enclosures)
Edred Secakuku, Vice Chairman, Ute Indian Business Committee (w/o enclosures)
Reannin Tapoof, Executive Assistant, Ute Indian Business Committee (w/o enclosures)

United States Environmental Protection Agency
Region 8 Air Program
Air Pollution Control Synthetic Minor Source Permit to Construct
Technical Support Document for
Proposed Permit #SMNSR-UO-000877-2014.001

Berry Petroleum Company, LLC
Section 23 Compressor Station
Uintah and Ouray Indian Reservation
Duchesne County, Utah

In accordance with the requirements of the Tribal Minor New Source Review (MNSR) Permit Program at 40 CFR Part 49, this Federal permit to construct is being issued under authority of the Clean Air Act (CAA). The EPA has prepared this technical support document describing the conditions of this permit and presents information that is germane to this permit action.

Table of Contents

I. Introduction 3
II. Facility Description 4
III. Proposed Synthetic Minor Permit Action 7
IV. Air Quality Review 9
V. Tribal Consultations and Communications 9
VI. Environmental Justice 9
VII. Authority 11
VIII. Public Notice 11

I. Introduction

On March 21, 2014, we received an application from Berry Petroleum Company, LLC (Berry), a wholly owned subsidiary of Linn Energy, requesting a synthetic minor permit for the Section 23 Compressor Station in accordance with the requirements of the MNSR permitting program.

This proposed permit action applies to an existing facility operating on the Uintah and Ouray Indian Reservation in Utah.

This permit does not authorize the construction of any new emission sources, or emission increases from existing units, nor does it otherwise authorize any other physical modifications to the facility or its operations. This permit is only intended to incorporate required and requested emission limits and provisions from the following documents:

A. A September 24, 2013, Federal Combined Complaint and Consent Agreement and Final Order (CAFO) between the EPA and Berry Petroleum Company (Docket No. CAA-08-2013-0014).

   The permit we propose to issue reflects the incorporation of the legally and practically enforceable emissions limitations of the CAFO as it pertains to the Section 23 Compressor Station. Under the CAFO Berry agreed to voluntarily accept enforceable restrictions on its potential to emit at the Section 23 Compressor Station, and to apply for and receive a synthetic minor MNSR permit memorializing those restrictions after termination of the CAFO. The facility is considered an area (minor) source of hazardous air pollutants (HAP) under the National Emissions Standards for Hazardous Air Pollutants, also known as Maximum Achievable Control Technology (MACT), for Oil and Gas Production Facilities at 40 CFR Part 63, Subpart HH (MACT HH), which only requires Berry to optimize the glycol recirculation rate for one (1) affected tri-ethylene glycol (TEG) dehydration system. The CAFO required Berry to route all emissions from the still vent of the TEG dehydrator at the facility to an installed enclosed combustion device, designed, and operated to achieve at least a 95% reduction of volatile organic compounds (VOC) and HAP emissions.

B. The March 21, 2014 permit application from Berry requesting enforceable emission limits and operational restrictions for the Section 23 Compressor Station.

   The permit application requested the following enforceable restrictions on one (1) existing TEG dehydration system in addition to the request to transfer applicable requirements from the CAFO. Specifically, Berry requested a requirement to control TEG dehydrator emissions using an enclosed combustor capable of reducing VOC and total HAP emissions by at least 98%, and requested complimentary VOC and total HAP emission limits on the TEG dehydrator. Because the requested VOC and total HAP reduction requirement for the combustion device is more stringent than the CAFO requirements, the permit we propose to issue will reflect the requested combustion device limitation.

This permit action consolidates the requirements from the CAFO and the limits requested by Berry in the permit application into one document. Upon compliance with this permit, Berry will have legally and practically enforceable requirements to reduce emissions that can be accounted for when determining the applicability of other CAA requirements, such as Prevention of Significant Deterioration (PSD), Part 71, and MACT.

II. Facility Description

The Section 23 Compressor Station consists of equipment designed to compress and dehydrate field natural gas received from the Brundage Canyon natural gas well field. Berry's 9-23X crude oil well pad is also co-located with the facility. Natural gas from the Brundage Canyon well sites enters the facility at a maximum rate of 12 million standard cubic feet per day (MMscfd). The gas feeds to an inlet scrubber (liquid knockout vessel) designed to remove liquids from the inlet natural gas stream (produced water and hydrocarbon liquid condensate). The produced water and condensate are transferred from the inlet scrubber to one of two 400 barrel (bbl) storage tanks and removed from the facility via truck loadout. The natural gas discharged from the inlet scrubber is routed to compression.

Inlet scrubber natural gas is fed to the compressors via a common suction header. Compressor discharge feeds to a discharge separator and coalescing filter for removal of condensed water and compressor oils. Filter overhead natural gas is fed through an amine liquid-filled vessel to remove trace amounts of hydrogen sulfide (H_2S) and then to a 12 MMscfd TEG dehydration system. The dehydration system removes water vapor from the natural gas and treated natural gas discharges to a separator and then to a sales pipeline. The dehydration system is equipped with a flash tank, and off gas from the flash tank is routed to the facility inlet scrubber. The still vent on the dehydration system is routed to an enclosed combustor to thermally oxidize VOC, organic HAP, and methane.

Water and hydrocarbon liquid condensate that condenses in compressor coolers is recycled back to the inlet scrubber where flash vapors are recovered and added to the compressor inlet volumes. Liquids from the inlet scrubber are routed to two 400 bbl storage tanks and loaded onto trucks for sales.

Each compressor is powered by a 4-stroke lean-burn (4SLB) reciprocating internal combustion engine. All fuel-burning equipment is fired by natural gas which has passed through the amine liquid vessel to remove any sulfur. The facility is designed to operate continuously throughout the year.

Crude oil and fresh water production are also located within the boundaries of the facility. Oil is pumped from the well using a 4SLB natural gas-fired pump jack engine into two heated 400 bbl storage tanks before being trucked out for sales. A 4-stroke rich-burn (4SRB) natural gas-fired generator powers a submersible pump which sends water to a nearby water flood (injection) facility.

The emission units identified in Table 1 are currently installed and operating at the facility. The details provided in this table are for informational purposes only and are not intended to be viewed as enforceable restrictions or open for public comment. The units and control requirements identified here either existed prior to any pre-construction permitting requirements or were approved/required through the mechanism identified. Table 2, Facility-wide Emissions, provides an accounting of uncontrolled and controlled emissions in tons per year (tpy).

Table 1. Existing Emission Units

Unit Description	Controls	Original Preconstruction Approval Date &/or Approval Details
Two (2) 4SLB, natural gas-fired compressor engines with a maximum site rating of 1,209 hp each.	None	No pre-construction approval required for the installation of the engines. Installed prior to the promulgation of the MNSR Permit Program.
One (1) 4SLB, natural gas-fired oil pump jack engine with a maximum site rating of 40 hp.	None	No pre-construction approval required for the installation of the engine. Installed prior to the promulgation of the MNSR Permit Program.
One (1) 4SRB, natural gas-fired generator engine with a maximum site rating of 72 hp.	None	No pre-construction approval required for the installation of the engine. Installed prior to the promulgation of the MNSR Permit Program.
Two 400 bbl* atmospheric condensate production storage tanks.	None	No pre-construction approval required for the installation of the storage tanks. Installed prior to the promulgation of the MNSR Permit Program.
Two 400 bbl* atmospheric crude oil production storage tanks.	None	No pre-construction approval required for the installation of the storage tanks. Installed prior to the promulgation of the MNSR Permit Program.
One 12 MMscfd* tri-ethylene glycol (TEG) dehydration system consisting of: One 0.25 MMBtu/hr TEG reboiler; One TEG/gas separation unit; One flash tank; and One 3.50 gallon per minute (gpm) TEG pump.	400 Btu/scf* Enclosed Combustor	No pre-construction approval required for the installation of the TEG dehydration system. Installed prior to the promulgation of the MNSR Permit Program. Control requirements established in the September 30, 2013 CAFO No. CAA-08-2013-0014. Stricter control requirements requested and proposed to be established through this permit action.
One (1) condensate truck-loading station.	None	No pre-construction approval required for the installation of the truck loading rack. Installed prior to the promulgation of the MNSR Permit Program.
One (1) crude oil truck-loading station.	None	No pre-construction approval required for the installation of the truck loading rack. Installed prior to the promulgation of the MNSR Permit Program.
Compressor Blowdown Events.	None	No pre-construction approval required for the compressor blowdown events. Compressors installed prior to the promulgation of the MNSR Permit Program.

Unit Description	Controls	Original Preconstruction Approval Date &/or Approval Details
Compressor Rod Packing Vents.	None	No pre-construction approval required for the compressor rod packing vents. Compressors installed prior to the promulgation of the MNSR Permit Program.
Starter Gas.	None	No pre-construction approval required for the compressor starter gas. Compressors installed prior to the promulgation of the MNSR Permit Program.
Equipment Leaks.	None	No pre-construction approval required for the equipment leaks. Facility constructed prior to the promulgation of the MNSR Permit Program.

* bbl = barrel; MMBtu/hr = million British thermal units per hour; MMscfd = million standard cubic feet per day.

Table 2. Facility-wide Emissions

Pollutant	Uncontrolled Potential Emissions (tpy)	Controlled Potential Emissions (tpy)
PM	NA	NA
PM_{10}	NA	NA
$PM_{2.5}$	NA	NA
SO_2	NA	NA
NO_X	42.38	42.42
CO	77.14	77.18
VOC	43.95	29.48
Greenhouse Gases		
CO_2 (mass basis)	13,644.00	13,666.00
CH_4 (mass basis)	89.66	86.22
N_2O (mass basis)	0.02	0.02
HFCs (mass basis)	NA	NA
PFCs (mass basis)	NA	NA
SF_6 (mass basis)	NA	NA
GHG_{total} (mass basis)	13,733.68	13,752.24
CO_2e (Total)	**15,877.00**	**15,826.00**
Hazardous Air Pollutants (HAP)		
Acetaldehyde	0.78	0.78
Acrolein	0.50	0.50
Benzene	2.90	0.19
Ethyl-Benzene	0.01	0.01
Toluene	0.47	0.10
n-Hexane	1.45	0.65
Xylene	0.27	0.04
Formaldehyde	7.29	7.29
2,2,4-Trimethylpentane	0.03	0.00
Cyclohexane	NA	NA
Total HAP*	**13.92**	**9.88**

PM – Particulate Matter
PM_{10} – Particulate Matter less than 10 microns in size
$PM_{2.5}$ – Particulate Matter less than 2.5 microns in size
SO_2 – Sulfur Dioxide
NO_X – Nitrogen Oxides
CO – Carbon Monoxide
VOC – Volatile Organic Compounds
CO_2 – Carbon dioxide
CH_4 – Methane
N_2O – Nitrous oxide
HFCs – Hydrofluorocarbons
PFCs – Perfluorocarbons
SF_6 – Sulfur hexafluoride
CO_2e – Equivalent CO_2. A measure used to compare the emissions from various greenhouse gases based upon their global warming potential (GWP)

HFCs, PFCs, and SF_6 emissions are not created during oil and natural gas production operations.

NA – Not Available

*Total HAPs is inclusive of, but not limited to the individual HAPs listed above.

III. Proposed Synthetic Minor Permit Action

A. Dehydration System and Controls

The natural gas industry commonly uses the glycol absorption process to remove naturally occurring water from raw natural gas. Most commonly, the glycol absorbent used is TEG. The TEG dehydration process produces VOC and HAP emissions from pressure reduction of rich glycol (immediately post absorption and prior to stripping and regeneration) and from the stripping of the rich glycol to regenerate lean glycol to be reused in the process. The HAP emissions consist primarily of n-hexane, benzene, toluene, ethylbenzene and xylenes.

The primary form of emission control is to capture and route the emissions from the still vent through a closed-vent system to an enclosed combustor, flare, or other combustion device to destroy the hydrocarbon content of the vapors. As required by the CAFO, Berry uses an enclosed combustion device designed and operated to destroy at least 95% of the VOC and total HAP emissions from the still vent. Berry has requested enforceable permit restrictions on the dehydration system to permanently recognize the use of the enclosed combustion device, as designed and operated to meet the manufacturer guaranteed 98% VOC and HAP destruction efficiency. Berry requested VOC and total HAP emission limits to accompany the requirement to reduce emissions by 98%. Because the requested emission restrictions are stricter than what is required in the CAFO, we are proposing that Berry demonstrate that the enclosed combustion device achieves a 98% VOC and HAP destruction efficiency and meets the requested VOC and total HAP emission limits.

We are also proposing the emission, operational, testing, monitoring, recordkeeping, and reporting requirements in Table 3 for the dehydration system and enclosed combustion device. The proposed requirements are consistent with MACT HH, and we added any necessary additional testing, monitoring, and recordkeeping requirements, pursuant to 40 CFR 49.151(ii)(C), to ensure that the requested emission limits are legally and practically enforceable.

Table 3. Proposed Dehydration System Emission, Operational, Testing, Monitoring, Recordkeeping, and Reporting Requirements

Type	**Proposed Requirement**
Construction and Operation	Route all emissions from the still vent to an enclosed combustion device capable of reducing uncontrolled VOC and total HAP emissions by at least 98% by weight and capable of meeting the VOC and HAP emission limits in the permit
Emission Limits	Limit emissions from the still vent and enclosed combustion device to: • VOC: 0.38 tpy • Total HAP: 0.14 tpy
Performance Testing	Initial performance test using EPA Reference Methods

	Subsequent performance tests every 36 months thereafter (unless model tested and meet criteria at 40 CFR 63.772(h)) Performance test after startup of each rebuilt or replaced enclosed combustion device (or model test by manufacturer under and meeting criteria of 40 CFR 63.772(h))
Monitoring	Monthly and bi-annual inspections according to manufacturer recommendations Weekly pilot light inspection Weekly visible emissions inspection
Recordkeeping	Keep records of all VOC and total HAP monthly and 12-month rolling emissions calculations, and all maintenance, inspection, and performance testing conducted
Reporting	Submit a summary of all monthly and 12-month rolling VOC and total HAP emissions calculations and all maintenance, inspections, and performance tests conducted in each annual report to the EPA

Table 4 below summarizes the emissions for the dehydration system and the effect of the proposed enforceable permit restrictions on the potential to emit (PTE) for that emissions unit, based on the information provided by Berry in the permit application.

Table 4. Dehydration System Still Vent Emissions Summary

Pollutant	**Uncontrolled Emissions (tpy)**	**Controlled PTE with Enforceable Emission Limits (tpy)**	**Net Change (tpy)**	**Emission Reduction with Enforceable Controls (%)**
	PTE	***Allowable/PTE***		
VOC	10.02	0.38	-9.64	96*
HAP	3.72	0.14	-3.58	96*

**Note: The dehydration system is currently subject to the area source requirements under MACT HH, found at 40 CFR 63.764(d)(2), which requires Berry to optimize the TEG circulation rate. According to Berry's permit application, the optimum TEG circulation pump rate is 1.86 gallons per minute (gpm), which was used to calculate the uncontrolled PTE. The requested enforceable restrictions would allow the dehydration system to qualify for the emission control exemption at 40 CFR 63.764(e)(1)(ii). Therefore, although the enclosed combustion device manufacturer guarantees 98% VOC (including all HAP emitted) and CH_4 destruction efficiency, the controlled PTE reported above were calculated using the maximum glycol circulation rate, per the MACT HH exemption provision at 40 CFR 63.760(e)(2)(ii), which is 3.50 gpm and results in a 96% VOC and HAP reduction when compared to the uncontrolled PTE.*

The proposed emission restrictions will result in a total of 0.38 tpy of VOC and 0.14 tpy of total HAP from the dehydration system. These controlled emissions are based on the dehydration system operating a maximum of 8,760 hours in a year, at a maximum capacity of 12 MMscfd, and maximum glycol recirculation pump rate of 3.5 gpm.

IV. Air Quality Review

The MNSR regulations at 40 CFR 49.154(d) require that an Air Quality Impact Assessment (AQIA) modeling analysis be performed if there is reason to be concerned that new construction would cause or contribute to a National Ambient Air Quality Standard (NAAQS) or PSD increment violation. If an AQIA reveals that the proposed construction could cause or contribute to a NAAQS or PSD increment violation, such impacts must be addressed before a pre-construction permit can be issued.

The emissions at this existing facility will not be increasing due to this permit action, and the emissions will continue to be well controlled at all times. In addition, this permit action does not authorize the construction of any new emission sources, or emission increases from existing units, nor does it otherwise authorize any other physical modifications to the facility or its operations and the substantive requirements of the CAFO (emission controls and reductions) have already been fulfilled at this facility. In short, this action will have no adverse air quality impacts; therefore, we have determined that an AQIA modeling analysis is not required for this action.

V. Tribal Consultations and Communications

We offer tribal government leaders an opportunity to consult on each permit action. We ask the tribal government leaders to respond to our offer to consult within 30 days of receiving the offer. We offered the Chairperson of the Ute Tribe an opportunity to consult on this permit action via letter dated February 5, 2015. To date, the EPA has not received a request for such consultation.

All minor source applications (synthetic minor, minor modification to an existing facility, new true minor, and general permit) are submitted to both the tribe and the EPA per the application instructions (see http://www2.epa.gov/region8/tribal-minor-new-source-review-permitting). The tribe has 10 business days from the receipt of the application to communicate to the EPA any preliminary questions and comments on the application. In the event an AQIA is triggered, we email a copy of that document to the tribe within 5 business days from the date that we receive it.

Additionally, we notify the tribe of the public comment period for the proposed permit and provide copies of the notice of public comment opportunity to post in various locations of their choosing on the Reservation. We also notify the tribe of the issuance of the final permit.

VI. Environmental Justice

On February 11, 1994, the President issued Executive Order 12898, entitled "Federal Actions to Address Environmental Justice in Minority Populations and Low-Income Populations." The Executive Order calls on each federal agency to make environmental justice a part of its mission by “identifying and addressing, as appropriate, disproportionately high and adverse human health or environmental effects of its programs, policies and activities on minority populations and low-income populations.”

The EPA defines “Environmental Justice” to include meaningful involvement of all people regardless of race, color, national origin, or income with respect to the development, implementation, and

enforcement of environmental laws, regulations, and polices. The EPA's goal is to address the needs of overburdened populations or communities to participate in the permitting process. *Overburdened* is used to describe the minority, low-income, tribal and indigenous populations or communities in the United States that potentially experience disproportionate environmental harms and risks due to exposures or cumulative impacts or greater vulnerability to environmental hazards.

This discussion describes our efforts to identify environmental justice communities and assess potential effects in connection with issuing this permit in Duchesne County, Utah, within the exterior boundaries of the Uintah and Ouray Indian Reservation.

A. Environmental Impacts to Potentially Overburdened Communities

This permit action does not authorize the construction of any new air emission sources, or air emission increases from existing units, nor does it otherwise authorize any other physical modifications to the associated facility or its operations. The air emissions at the existing facility will not increase due to the associated action and the emissions will continue to be well controlled at all times. This action will have no adverse air quality impacts.

Furthermore, the permit contains a provision stating, "*The permitted source shall not cause or contribute to a National Ambient Air Quality Standard violation or a PSD increment violation.*" Noncompliance with this permit provision is a violation of the permit and is grounds for enforcement action and for permit termination or revocation. As a result, we conclude that issuance of the aforementioned permit will not have disproportionately high or adverse human health effects on communities in the vicinity of the Uintah and Ouray Indian Reservation.

B. Enhanced Public Participation

Given the presence of potentially overburdened communities in the vicinity of the facility, we are providing an enhanced public participation process for this permit.

1. Interested parties can subscribe to an EPA listserve that notifies them of public comment opportunities on the Uintah and Ouray Indian Reservation for proposed air pollution control permits via email at http://www2.epa.gov/region8/air-permit-public-comment-opportunities.

2. All minor source applications (synthetic minor, modification to an existing facility, new true minor or general permit) are submitted to both the tribe and the EPA per the application instructions (see http://www2.epa.gov/region8/tribal-minor-new-source-review-permitting).

3. The tribe has 10 business days to communicate to the EPA any preliminary questions and comments on the application.

4. In the event an AQIA is triggered, we email a copy of that document to the tribe within 5 business days from the date we receive it.

5. We notify the tribe of the public comment period for the proposed permit and provide copies of the notice of public comment opportunity to post in various locations of their choosing on the Reservation. We also notify the tribe of the issuance of the final permit.

6. We offer the tribal government leaders an opportunity to consult on each proposed permit action. The tribal government leaders are asked to respond to the EPA's offer to consult within 30 days of receiving the letter.

VII. Authority

Requirements under 40 CFR Part 49 to obtain a permit apply to new and modified minor stationary sources, and minor modifications at existing major stationary sources ("major" as defined in 40 CFR 52.21). In addition, the MNSR permitting program provides a mechanism for an otherwise major stationary source to voluntarily accept restrictions on its potential to emit to become a synthetic minor source. We are charged with direct implementation of these provisions where there is no approved Tribal implementation plan for implementation of the MNSR regulations. Pursuant to Section 301(d)(4) of the CAA (42 U.S.C. Section 7601(d)), we are authorized to implement the MNSR regulations at 40 CFR Part 49 in Indian country. The Section 23 Compressor Station is located within the exterior boundaries of the Uintah and Ouray Indian Reservation in Utah. The exact location is Latitude 40.02993, Longitude -110.40752, in Duchesne County, Utah.

VIII. Public Notice

A. Public Comment Period

In accordance with 40 CFR 49.157, we must provide public notice and a 30-day public comment period to ensure that the affected community and the general public have reasonable access to the application and proposed permit information. The application, the proposed permit, this technical support document, and all supporting materials for the proposed permit are available at:

Ute Indian Tribe
Environmental Programs Office
910 South 7500 East
Fort Duchesne, Utah 84026

and

U.S. EPA
Region 8 Air Program Office
1595 Wynkoop Street (8P-AR)
Denver, Colorado 80202-1129

All documents are available for review at our office Monday through Friday from 8:00 a.m. to 4:00 p.m. (excluding Federal holidays). Additionally, the proposed permit and technical support document can be reviewed on our website at: http://www2.epa.gov/region8/air-permit-public-comment-opportunities.

Any person may submit written comments on the proposed permit and may request a public hearing during the public comment period. These comments must raise any reasonably ascertainable issues with supporting arguments by the close of the public comment period (including any public hearing). Comment may be sent to the EPA address above, or sent via an email to r8airpermitting@epa.gov, with the topic "Comments on SMNSR Permit for the Berry Petroleum Section 23 Compressor Station".

B. Public Hearing

A request for a public hearing must be in writing and must state the nature of the issues proposed to be raised at the hearing. We will hold a hearing whenever there is, on the basis of requests, a significant degree of public interest in a proposed permit. We may also hold a public hearing at our discretion, whenever, for instance, such a hearing might clarify one or more issues involved in the permit decision.

C. Final Permit Action

In accordance with 40 CFR 49.159, a final permit becomes effective 30 days after permit issuance, unless: (1) a later effective date is specified in the permit; (2) appeal of the final permit is made as detailed in the next section; or (3) we may make the permit effective immediately upon issuance if no comments resulted in a change or denial of the proposed permit. We will send notice of the final permit action to any individual who commented on the proposed permit during the public comment period. In addition, the source will be added to a list of final permit actions which is posted on our website at: http://www2.epa.gov/region8/nsr-and-psd-permits-issued-region-8. Anyone may request a copy of the final permit at any time by contacting the Tribal Air Permit Program at (800) 227–8917 or sending an email to r8airpermitting@epa.gov.

D. Appeals to the Environmental Appeals Board

In accordance with 40 CFR 49.159, within 30 days after a final permit decision has been issued, any person who filed comments on the proposed permit or participated in the public hearing may petition the Environmental Appeals Board (EAB) to review any condition of the permit decision. The 30-day period within which a person may request review under this section begins when we have fulfilled the notice requirements for the final permit decision. Motions to reconsider a final order by the EAB must be filed within 10 days after service of the final order. A petition to the EAB is under Section 307(b) of the CAA, a prerequisite to seeking judicial review of the final agency action. For purposes of judicial review, final agency action occurs when we issue or deny a final permit and agency review procedures are exhausted.

United States Environmental Protection Agency
Region 8, Air Program
1595 Wynkoop Street
Denver, CO 80202

Air Pollution Control
Synthetic Minor Source Permit to Construct

40 CFR 49.151

 # SMNSR-UO-000877-2014.001

Permit to Construct to establish legally and practically enforceable limitations and requirements on sources at an existing facility.

Permittee:

Berry Petroleum Company, LLC

Permitted Facility:

Section 23 Compressor Station
Uintah and Ouray Indian Reservation
Duchesne County, Utah

PROPOSED

Summary

On March 21, 2014, we received an application from Berry Petroleum Company, LLC (Berry), a wholly owned subsidiary of Linn Energy, requesting a synthetic minor permit for the Section 23 Compressor Station in accordance with the requirements of the Tribal Minor New Source Review (MNSR) Permit Program at 40 CFR Part 49.

This proposed permit action applies to an existing facility operating on the Uintah and Ouray Indian Reservation in Utah.

This permit does not authorize the construction of any new emission sources, or emission increases from existing units, nor does it otherwise authorize any other physical modifications to the facility or its operations. This permit is only intended to incorporate required and requested enforceable emission limits and operational restrictions from a September 24, 2013, Federal Combined Complaint and Consent Agreement and Final Order (CAFO) between the EPA and Berry (Docket No. CAA-08-2013-0014) (see 40 CFR 49.151(c)(1)(ii)(d)) and 49.158(a)(c)(4)(ii) and (iii)), and a March 21, 2014 MNSR application. Berry requested a requirement to control emissions from a tri-ethylene glycol (TEG) dehydration system using an enclosed combustor capable of reducing volatile organic compound (VOC) and hazardous air pollutant (HAP) emissions and requested associated VOC and HAP emission limits. Berry also requested enforceable restrictions for installation and operation of a catalytic control system on one (1) of the compressor engines at the facility, including CO, VOC, and formaldehyde emission limits.

Upon compliance with the permit, Berry will have legally and practically enforceable restrictions on emissions that can be used when determining the applicability of other Clean Air Act (CAA) permitting requirements, such as under the Prevention of Significant Deterioration (PSD) Permit Program at 40 CFR Part 52 and the Title V Operating Permit Program at 40 CFR Part 71 (Part 71).

The EPA has determined that issuance of this MNSR permit will not contribute to National Ambient Air Quality Standards (NAAQS) violations, or have potentially adverse effects on ambient air quality.

PROPOSED

Table of Contents

I. Conditional Permit to Construct 4
A. General Information 4
B. Applicability 4
C. Requirements for the TEG Dehydration System 4
D. Requirements for Records Retention 7
E. Requirements for Reporting 8
II. General Provisions 9
A. Conditional Approval 9
B. Authorization 11

PROPOSED

I. Conditional Permit to Construct

A. General Information

Facility:	Berry Petroleum Company, LLC – Section 23 Compressor Station
Permit number:	SMNSR-UO-000877-2014.001
SIC Code and SIC Description:	1311- Crude Petroleum and Natural Gas

Site Location:
Section 23 Compressor Station
NE ¼, SE ¼ Sec 23 T5S R5W
Uintah and Ouray Indian Reservation
Duchesne County, Utah
Latitude 40.02993, Longitude -110.40752

Corporate Office Location
Berry Petroleum Company, LLC
1999 Broadway Street, Suite 3700
Denver, Colorado 80202

The equipment listed in this permit shall be operated by Berry Petroleum Company, LLC at the location described above.

B. Applicability

1. This federal Permit to Construct is being issued under authority of the MNSR Permit Program.

2. The requirements in this permit have been created, at the Permittee's request and pursuant to CAFO No. CAA-08-2013-0014, to establish legally and practically enforceable restrictions for limiting VOC and HAP TEG dehydration system emissions and VOC, CO, and formaldehyde engine emissions.

3. Any conditions established for this facility or any specific units at this facility pursuant to any permit issued under the authority of the PSD Permit Program or the MNSR Permit Program shall continue to apply.

4. By issuing this permit, EPA does not assume any risk of loss which may occur as a result of the operation of the permitted facility by the Permittee, Owner, and/or Operator, if the conditions of this permit are not met by the Permittee, Owner, and/or Operator.

C. Requirements for the TEG Dehydration System

1. Construction and Operational Limits

   (a) The Permittee shall install and operate emission controls as specified in this permit on one (1) TEG natural gas dehydration system meeting the following specifications:

      (i) Limited to a maximum throughput of 12 million standard cubic feet per day (MMscfd) of natural gas;
      (ii) Equipped with no more than one (1) natural gas-fired TEG reboiler with a maximum rated heat input of 0.25 million British thermal units per hour (MMBtu/hr);

PROPOSED

(iii) Equipped with no more than one (1) TEG/gas separation unit and one (1) flash tank; and

(iv) Equipped with no more than one (1) TEG recirculation pump limited to a maximum pump rate of 3.50 gallons per minute (gpm).

(b) Only the dehydration unit that is operated and controlled as specified in this permit is approved for installation and operation under this permit.

2. Emission Limits

(a) Emissions from the TEG dehydration system shall not exceed the following limits:

(i) VOC: 0.38 tons in any consecutive 12-month period; and

(ii) Total HAP: 0.14 tons in any consecutive 12-month period.

(b) Emission limits shall apply at all times, unless otherwise specified in this permit.

3. Emissions Calculation Requirements

(a) VOC and total BTEX emissions must be calculated, in tons, and recorded at the end of each month, beginning with the first calendar month that this permit is effective.

(b) Prior to 12 full months of VOC and total BTEX emissions calculations, the Permittee must, within seven (7) calendars days of the end of each month, add the emissions for that month to the calculated emissions for all previous months since production commenced and record the total. Thereafter, the Permittee must, within seven (7) calendars days of the end of each month, add the emissions for that month to the calculated emissions for the preceding 11 months and record a new 12-month total.

(c) VOC and total BTEX emissions shall be calculated, in tons, using GRI-GLYCalc™ Version 4.0 or higher. Inputs to the model shall be representative of actual operating conditions of the glycol dehydration unit and may be determined using the procedures documented in the Gas Research Institute (GRI) report entitled "Atmospheric Rich/Lean Method for Determining Glycol Dehydrator Emissions" (GRI-95/0368.1).

4. Control and Operational Requirements

(a) The Permittee shall route all emissions from the TEG dehydration system process vent through a closed-vent system to an enclosed combustion device designed and operated as specified in this permit.

(b) The Permittee shall design, install, continuously operate, and maintain the closed-vent system such that it is compliant with the closed-vent system requirements at 40 CFR 63.771(c).

(c) The Permittee shall design, install, continuously operate, and maintain an enclosed combustion device such that the mass content of the uncontrolled emissions of VOC and total BTEX from the TEG dehydration system process vent are reduced by at least 98% by weight.

PROPOSED

(d) The Permittee shall follow the manufacturer's recommended maintenance schedule and operational procedures to ensure optimum performance of the TEG dehydration system, closed-vent system, and enclosed combustion device.

5. Testing Requirements

(a) The Permittee shall demonstrate that the enclosed combustion device achieves 98% VOC and total BTEX emissions destruction efficiency and meets the VOC and total BTEX emissions limits in this permit by conducting performance tests of the enclosed combustion device in accordance with the procedures specified in this permit:

(i) An initial performance test shall be conducted within 180 days after the effective date of this permit;
(ii) Subsequent performance tests of the enclosed combustion device shall be conducted every 36 months thereafter in accordance with the procedures specified in this permit. Subsequent performance tests are not required for enclosed combustion devices that are model tested under and meet the criteria of 40 CFR 63.772(h); and
(iii) If the enclosed combustion device is repaired or replaced, the Permittee shall either conduct a performance test on the repaired or replaced unit within 180 days of starting operations of the repaired or replaced unit, or the unit shall be model tested by the manufacturer under and meeting the criteria of 40 CFR 63.772(h).

(b) The Permittee shall demonstrate that the enclosed combustion device achieves 98% VOC and total BTEX emissions destruction efficiency and meets the VOC and total BTEX emissions limits in this permit using the following performance test methods and procedures:

(i) Method 1 or 1A, as appropriate for the selection of the sampling sites, as specified in 40 CFR 63.772(e)(3)(i);
(ii) Method 2, 2A, 2C, or 2D, of 40 CFR part 60, Appendix A to determine gas volumetric flowrate, as specified in 40 CFR 63.772(e)(3)(ii); and
(iii) Method 18 at 40 CFR Part 60, Appendix A, Method 25A at 40 CFR Part 60, Appendix A, ASTM D6420-99 (2004), or any other method or data that have been validated according to the applicable procedures in Method 301 at 40 CFR Part 63, Appendix A, to determine compliance with the 98% VOC and total BTEX emissions destruction efficiency requirement.

(c) The Permittee shall perform testing of the inlet wet gas stream to the TEG dehydration system (extended wet gas analysis) at least once every consecutive 12-month period. The analysis shall include the inlet gas temperature and pressure at which the sample was taken.

6. Monitoring Requirements

(a) The Permittee shall inspect the enclosed combustion device on a monthly and bi-annual basis to ensure proper operation according to the manufacturer's maintenance recommendations.

PROPOSED

(b) The Permittee shall inspect the pilot light on the enclosed combustion device at least once per calendar week to ensure that it is lit.

(c) The Permittee shall inspect the closed-vent system on a monthly basis using the procedures specified in 40 CFR 63.773(c).

(d) The Permittee shall install operate, and maintain a meter that continuously measures the natural gas flowrate to the TEG dehydration system with an accuracy of plus or minus 2% or better. The meter shall be inspected on a monthly basis to ensure proper operation per the manufacturer's specifications.

(e) The Permittee shall convert monthly natural gas flowrate to a daily average by dividing the monthly flowrate by the number of days in the month that the TEG dehydration system processed natural gas. The Permittee shall document the actual monthly average natural gas flowrate.

(f) The Permittee shall determine the monthly and rolling 12-month VOC and total BTEX emissions using the model GRI-GLYCalc™, Version 4.0 or higher, and the procedures presented in the associated GRI-GLYCalc™ Technical Reference Manual.

7. Recordkeeping Requirements

(a) The Permittee shall document compliance with the VOC and total BTEX emissions destruction efficiency and VOC and total BTEX emission limits in this permit by keeping the following records:

(i) All manufacturer and/or vendor specifications for the TEG dehydration system, closed-vent system, enclosed combustion device, and any monitoring equipment;
(ii) The results of all required performance tests;
(iii) All extended wet gas analyses;
(iv) The actual monthly average natural gas flow rate;
(v) All records required for the glycol dehydration unit, the closed vent system, and control device specified in 40 CFR 63.774, as appropriate; and
(vi) The total monthly and consecutive 12-month VOC and total BTEX emissions calculations for the TEG dehydration unit.

D. Requirements for Records Retention

1. The Permittee shall retain all records required by this permit for a period of at least five (5) years from the date the record was created.

2. Records shall be kept in the vicinity of the facility, such as at the facility, the location that has day-to-day operational control over the facility, or the location that has day-to-day responsibility for compliance of the facility.

PROPOSED

E. Requirements for Reporting

1. Annual Emission Reports

   (a) The Permittee shall submit a written annual report of the actual annual emissions from all emission units at the facility each year no later than April 1st. The annual report shall cover the period for the previous calendar year. All reports shall be certified to truth and accuracy by the responsible official.

   (b) The report shall include VOC and total BTEX emissions.

   (c) The report shall be submitted to:

   U.S. Environmental Protection Agency, Region 8
   Office of Partnerships and Regulatory Assistance
   Tribal Air Permitting Program, 8P-AR
   1595 Wynkoop Street
   Denver, Colorado 80202

   The report may be submitted via electronic mail to R8AirPermitting@epa.gov.

2. All other documents required to be submitted under this permit, with the exception of the Annual Emission Reports, shall be submitted to:

   U.S. Environmental Protection Agency, Region 8
   Office of Enforcement, Compliance & Environmental Justice
   Air Toxics and Technical Enforcement Program, 8ENF-AT
   1595 Wynkoop Street
   Denver, Colorado 80202

   Documents may be submitted via electronic mail to R8AirReportEnforcement@epa.gov.

3. The Permittee shall promptly submit to the EPA a written report of any deviations of emission or operational limits specified in this permit and a description of any corrective actions or preventative measures taken. A "prompt" deviation report is one that is post marked or submitted via electronic mail to r8airreportenforcement@epa.gov as follows:

   (a) Within 30 days from the discovery of a deviation that would cause the Permittee to exceed the emission limits or operational limits if left uncorrected for more than five (5) days after discovering the deviation; and

   (b) By April 1st for the discovery of a deviation of recordkeeping or other permit conditions during the preceding calendar year that do not affect the Permittee's ability to meet the emission limits.

4. The Permittee shall submit a written report for any required performance tests to the EPA Regional Office within 60 days after completing the tests.

5. The Permittee shall submit any record or report required by this permit upon EPA request.

PROPOSED

II. General Provisions

A. Conditional Approval:

Pursuant to the authority of 40 CFR 49.151, the EPA hereby conditionally grants this permit to construct. This authorization is expressly conditioned as follows:

1. *Document Retention and Availability:* This permit and any required attachments shall be retained and made available for inspection upon request at the location set forth herein.

2. *Permit Application:* The Permittee shall abide by all representations, statements of intent and agreements contained in the application submitted by the Permittee. The EPA shall be notified 10 days in advance of any significant deviation from this permit application as well as any plans, specifications or supporting data furnished.

3. *Permit Deviations:* The issuance of this permit may be suspended or revoked if the EPA determines that a significant deviation from the permit application, specifications, and supporting data furnished has been or is to be made. If the proposed source is constructed, operated, or modified not in accordance with the terms of this permit, the Permittee will be subject to appropriate enforcement action.

4. *Compliance with Permit:* The Permittee shall comply with all conditions of this permit, including emission limitations that apply to the affected emissions units at the permitted facility/source. Noncompliance with any permit term or condition is a violation of this permit and may constitute a violation of the CAA and is grounds for enforcement action and for a permit termination or revocation.

5. *Fugitive Emissions:* The Permittee shall take all reasonable precautions to prevent and/or minimize fugitive emissions during the construction period.

6. *NAAQS and PSD Increments:* The permitted source shall not cause or contribute to a NAAQS violation or a PSD increment violation.

7. *Compliance with Federal and Tribal Rules, Regulations, and Orders:* Issuance of this permit does not relieve the Permittee of the responsibility to comply fully with all other applicable federal and tribal rules, regulations, and orders now or hereafter in effect.

8. *Enforcement:* It is not a defense, for the Permittee, in an enforcement action, to claim that it would have been necessary to halt or reduce the permitted activity in order to maintain compliance with the conditions of this permit.

9. *Modifications of Existing Emissions Units/Limits:* For proposed modifications, as defined at 40 CFR 49.152(d), that would increase an emissions unit's allowable emissions of pollutants above its existing permitted annual allowable emissions limit, the Permittee shall first obtain a permit modification pursuant to the MNSR regulations approving the increase. For a proposed modification that is not otherwise subject to review under the PSD or MNSR regulations, such proposed increase in the annual allowable emissions limit shall be approved through an administrative permit revision as provided at 40 CFR 49.159(f).

PROPOSED

10. *Relaxation of Legally and Practically Enforceable Limits:* At such time that a new or modified source within this permitted facility/source or modification of this permitted facility/source becomes a major stationary source or major modification solely by virtue of a relaxation in any legally and practically enforceable limitation which was established after August 7, 1980, on the capacity of the permitted facility/source to otherwise emit a pollutant, such as a restriction on hours of operation, then the requirements of the PSD regulations shall apply to the source or modification as though construction had not yet commenced on the source or modification.

11. *Revise, Reopen, Revoke and Reissue, or Terminate for Cause:* This permit may be revised, reopened, revoked and reissued, or terminated for cause. The filing of a request by the Permittee, for a permit revision, revocation and reissuance, or termination, or of a notification of planned changes or anticipated noncompliance does not stay any permit condition. The EPA may reopen this permit for a cause on its own initiative, e.g., if this permit contains a material mistake or the Permittee fails to assure compliance with the applicable requirements.

12. *Severability Clause:* The provisions of this permit are severable, and in the event of any challenge to any portion of this permit, or if any portion is held invalid, the remaining permit conditions shall remain valid and in force.

13. *Property Rights:* This permit does not convey any property rights of any sort or any exclusive privilege.

14. *Information Requests:* The Permittee shall furnish to the EPA, within a reasonable time, any information that the EPA may request in writing to determine whether cause exists for revising, revoking and reissuing, or terminating this permit or to determine compliance with this permit. For any such information claimed to be confidential, the Permittee shall also submit a claim of confidentiality in accordance with 40 CFR Part 2, Subpart B.

15. *Inspection and Entry:* The EPA or its authorized representatives may inspect this permitted facility/source during normal business hours for the purpose of ascertaining compliance with all conditions of this permit. Upon presentation of proper credentials, the Permittee shall allow the EPA or its authorized representative to:

    (a) Enter upon the premises where this permitted facility/source is located or emissions-related activity is conducted, or where records are required to be kept under the conditions of this permit;

    (b) Have access to and copy, at reasonable times, any records that are required to be kept under the conditions of this permit;

    (c) Inspect, during normal business hours or while this permitted facility/source is in operation, any facilities, equipment (including monitoring and air pollution control equipment), practices, or operations regulated or required under this permit;

    (d) Sample or monitor, at reasonable times, substances or parameters for the purpose of assuring compliance with this permit or other applicable requirements; and

    (e) Record any inspection by use of written, electronic, magnetic and photographic media.

PROPOSED

16. *Permit Effective Date:* This permit is effective immediately upon issuance unless comments resulted in a change in the proposed permit, in which case the permit is effective 30 days after issuance. The Permittee may notify the EPA, in writing, that this permit or a term or condition of it is rejected. Such notice should be made within 30 days of receipt of this permit and should include the reason or reasons for rejection.

17. *Permit Transfers:* Permit transfers shall be made in accordance with 40 CFR 49.159(f). The Air Program Director shall be notified in writing at the address shown below if the company is sold or changes its name.

    U.S. Environmental Protection Agency, Region 8
    Office of Partnerships and Regulatory Assistance
    Tribal Air Permitting Program, 8P-AR
    1595 Wynkoop Street
    Denver, Colorado 80202

18. *Invalidation of Permit:* Unless this permitted source of emissions is an existing source, this permit becomes invalid if construction is not commenced within 18 months after the effective date of this permit, construction is discontinued for 18 months or more, or construction is not completed within a reasonable time. The EPA may extend the 18-month period upon a satisfactory showing that an extension is justified. This provision does not apply to the time period between the construction of the approved phases of a phased construction project. The Permittee shall commence construction of each such phase within 18 months of the projected and approved commencement date.

19. *Notification of Start-Up:* The Permittee shall submit a notification of the anticipated date of initial start-up of this permitted source to the EPA within 60 days of such date, unless this permitted source of emissions is an existing source.

B. Authorization:

Authorized by the United States Environmental Protection Agency, Region 8

_____

Darcy O'Connor, Acting Assistant Regional Administrator Date
Office of Partnerships and Regulatory Assistance

PROPOSED

MEMO TO FILE

DATE: April 10, 2015

SUBJECT: Uintah and Ouray Indian Reservation; Berry Petroleum Company, LLC, Environmental Justice

FROM: Victoria Parker-Christensen, EPA Region 8 Air Program

TO: Source Files:
205c AirTribal UO Berry Petroleum Company, LLC, Section 22 Compressor Station
SMNSR-UO-000876-2014.001
FRED # 105319

205c AirTribal UO Berry Petroleum Company, LLC, Section 23 Compressor Station
SMNSR-UO-000877-2014.001
FRED # 105318

On February 11, 1994, the President issued Executive Order 12898, entitled "Federal Actions to Address Environmental Justice in Minority Populations and Low-Income Populations." The Executive Order calls on each federal agency to make environmental justice a part of its mission by "identifying and addressing, as appropriate, disproportionately high and adverse human health or environmental effects of its programs, policies and activities on minority populations and low-income populations."

The EPA defines "Environmental Justice" as the fair treatment and meaningful involvement of all people regardless of race, color, national origin, or income with respect to the development, implementation, and enforcement of environmental laws, regulations, and polices. The EPA's goal with respect to Environmental Justice in permitting is to enable overburdened communities to have full and meaningful access to the permitting process and to develop permits that address environmental justice issues to the greatest extent practicable under existing environmental laws. *Overburdened* is used to describe the minority, low-income, tribal and indigenous populations or communities in the United States that potentially experience disproportionate environmental harms and risks as a result of greater vulnerability to environmental hazards.

This discussion describes our efforts to identify environmental justice communities and assess potential effects in connection with issuing draft Federal Tribal Minor New Source Review (MNSR) permits to Berry Petroleum Company, LLC (Berry), for two compressor stations located within the exterior boundaries of the Uintah and Ouray Indian Reservation in Uintah County, Utah.

Region 8 Air Program Determination

Based on the findings described in the following sections of this memorandum, we conclude that issuance of the aforementioned permits are not expected to have disproportionately high or adverse human health effects on overburdened communities in the vicinity of the facilities on the Uintah and Ouray Indian Reservation.

Permit Request

The EPA received applications from the Berry requesting synthetic minor permits for the Section 22 Compressor Station and Section 23 Compressor Station in accordance with the requirements of the MNSR Permit Program at 40 CFR Part 49. These permit actions do not authorize the construction of any new emission sources, or emission increases from existing units, nor does it otherwise authorize any other physical modifications to the facility or its operations. The permit actions are only intended to incorporate required and requested emission limits and provisions from the permit applications and a September 24, 2013, Federal Combined Complaint and Consent Agreement and Final Order (CAFO) between the EPA and Berry Petroleum Company (Docket No. CAA-08-2013-0014).

The proposed permits reflects the incorporation of the legally and practically enforceable emissions limitations of the CAFO as it pertains to the Section 22 Compressor Station and Section 23 Compressor Station. Under the CAFO Berry agreed to voluntarily accept enforceable restrictions on its potential to emit at each compressor station, and to apply for and receive a synthetic minor MNSR permits memorializing those restrictions after termination of the CAFO. The transfer of the requirements from the CAFO, in addition to the incorporation of limits requested by Berry in the applications, consolidates the requirements originating from these documents into one document. Upon compliance with the permits, Berry will have legally and practically enforceable reductions in emissions that can be used when determining the applicability of other CAA requirements, such as PSD, Part 71, and NESHAP.

The facilities are located within the federally-recognized exterior boundaries of the Uintah and Ouray Indian Reservation in Uintah County, Utah. The site locations are given below:

Section 22 Compressor Station	Section 23 Compressor Station
NW ¼, SW ¼ Sec 22 T5S R4W	NE ¼, SE ¼ Sec 23 T5S R5W
Latitude: 40.01836	Latitude: 40.02993
Longitude: -110. 19814	Longitude: -110. 40752

Air Quality Review

The MNSR regulations at 40 CFR 49.154(d) require that an Air Quality Impact Assessment (AQIA) modeling analysis be performed if there is reason to be concerned that new construction would cause or contribute to a National Ambient Air Quality Standard (NAAQS) or PSD increment violation. If an AQIA reveals that the proposed construction could cause or contribute to a NAAQS or PSD increment violation, such impacts must be addressed before a pre-construction permit can be issued. Because the permit actions do not authorize the construction of any new emission sources, or emission increases from existing units we have determined that an AQIA modeling analysis is not required for this action.

For purposes of Executive Order 12898 on environmental justice, the EPA has recognized that compliance with the NAAQS is "emblematic of achieving a level of public health protection that, based on the level of protection afforded by a primary NAAQS, demonstrates that minority or low-income populations will not experience disproportionately high and adverse human health or environmental effects due to the exposure to relevant criteria pollutants." *In re Shell Gulf of Mexico, Inc. & Shell Offshore, Inc.*, 15 E.A.D., slip op. at 74 (EAB 2010). This is because the NAAQS are health-based

standards, designed to protect public health with an adequate margin of safety, including sensitive populations such as children, the elderly, and asthmatics.

Environmental Impacts to Potentially Overburdened Communities

This permit action does not authorize the construction of any new air emission sources, or air emission increases from existing units, nor does it otherwise authorize any other physical modifications to the associated facility or its operations. The air emissions at the existing facility will not increase due to the associated action. A map of the area surrounding the facility showing total population based on the U.S. Census Bureau 2010 demographic data is attached to this memorandum.

Furthermore, the permit contains a provision stating, "*The permitted source shall not cause or contribute to a National Ambient Air Quality Standard violation or a PSD increment violation.*" Noncompliance with this permit provision is a violation of the permit and is grounds for enforcement action and for permit termination or revocation. As a result, we conclude that issuance of the aforementioned permits will not have disproportionately high or adverse human health effects on communities in the vicinity of the Uintah and Ouray Indian Reservation.

Tribal Consultation and Enhanced Public Participation

The EPA offers Tribal Government Leaders an opportunity to consult on each permit action. Tribal Government Leaders are asked to respond to our offer to consult within 30 days. The Chairman of the Ute Indian Tribe was offered an opportunity to consult on this permit action via a letter dated February 5, 2015.

Given the presence of potentially overburdened communities in the vicinity of the facility, we are providing an enhanced public participation process for this permit.

1. Interested parties can subscribe to an EPA listserve that notifies them of public comment opportunities on the Uintah and Ouray Indian Reservation for proposed air pollution control permits via email at http://www2.epa.gov/region8/air-permit-public-comment-opportunities.

2. All minor source applications (synthetic minor, modification to an existing facility, new true minor or general permit) are submitted to both the Tribe and us per the application instructions (see http://www2.epa.gov/region8/tribal-minor-new-source-review-permitting).

3. The Tribe has 10 business days to respond to us with questions and comments on the application.

4. In the event an AQIA is triggered, we email a copy of that document to the Tribe within 5 business days from the date we receive it.

5. We notify the Tribe of the public comment period for the proposed permit and provide copies of the notice of public comment opportunity to post in various locations of their choosing on the Reservation. We also notify the Tribe of the issuance of the final permit.

Attachment

Map of area surrounding Section 22 Compressor Station and Section 23 Compressor Station with U.S. Census Bureau 2010 total population

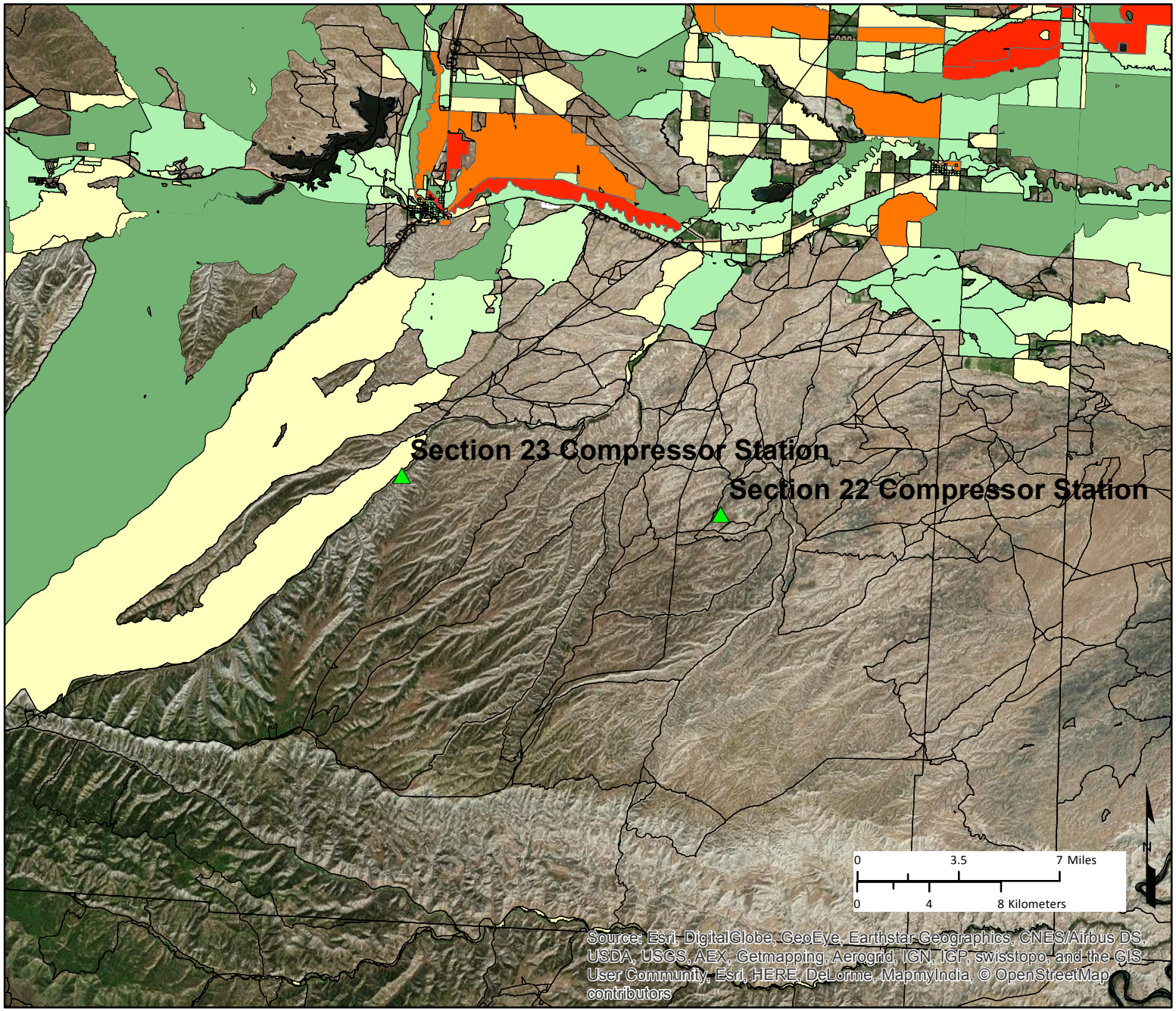

Uintah-Ouray Indian Reservation CAA New Source Review Program US Census Bureau 2010 Population Distrubution

Berry Compressor Stations

TOTAL_POPULATION

- 0
- 1 - 5
- 6 - 10
- 11 - 25
- 26 - 50
- 51 - 100
- 101 - 348
- County Boundary
- State Boundary

Date: April 10, 2015

Map Projection: UTM, Meters, Zone 13N, NAD83.

Data Sources:

City Boundary - Navteq (2012);
Census Block Population - U.S. Census Bureau (2010);
County Boundary - U.S. Census Bureau (2010);
State Boundary - U.S. Census Bureau (2010);
Base - ESRI Imagery Webservice (2014).

Disclaimer: EPA makes no claim regarding the accuracy or precision of these data. Questions concerning the data should be referred to the source agency. This map does not necessarily represent EPA's position on any Indian Country boundaries or the jurisdictional status of any specific location.

Area Enlarged

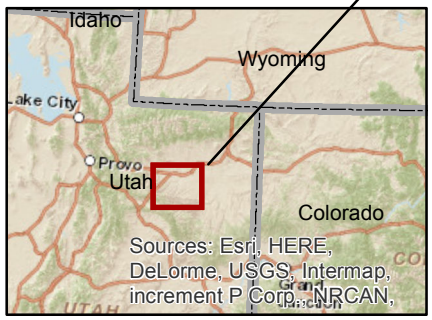

EPA United States Environmental Protection Agency
REGION 8
serving the states & tribes of Colorado, Montana, Wyoming, Utah, North Dakota & South Dakota

MEMO TO FILE

DATE: April 10, 2015

SUBJECT: Uintah and Ouray Indian Reservation; Berry Petroleum Company, LLC, Endangered Species Act

FROM: Victoria Parker-Christensen, EPA Region 8 Air Program

TO: Source Files:
205c AirTribal UO Berry Petroleum Company, LLC, Section 22 Compressor Station
SMNSR-UO-000876-2014.001
FRED # 105319

205c AirTribal UO Berry Petroleum Company, LLC, Section 23 Compressor Station
SMNSR-UO-000877-2014.001
FRED # 105318

Pursuant to Section 7 of the Endangered Species Act (ESA), 16 U.S.C. §1536, and its implementing regulations at 50 CFR, part 402, the EPA is required to ensure that any action authorized, funded, or carried out by the Agency is not likely to jeopardize the continued existence of any Federally-listed endangered or threatened species or result in the destruction or adverse modification of such species' designated critical habitat. Under ESA, those agencies that authorize, fund, or carry out the federal action are commonly known as "action agencies." If an action agency determines that its federal action "may affect" listed species or critical habitat, it must consult with the U.S. Fish and Wildlife Service (FWS). If an action agency determines that the federal action will have no effect on listed species or critical habitat, the agency will make a "no effect" determination. In that case, the action agency does not initiate consultation with the FWS and its obligations under Section 7 are complete.

In complying with its duty under ESA, the EPA, as the action agency, examined the potential effects on listed species and designated critical habitat relating to issuing these Clean Air Act (CAA) Tribal Minor New Source Review (MNSR) permits to Berry Petroleum Company, LLC (Berry), for two compressor stations located within the exterior boundaries of the Uintah and Ouray Indian Reservation in Uintah County, Utah.

Permit Request

The EPA received applications from the Berry requesting synthetic minor permits for the Section 22 Compressor Station and Section 23 Compressor Station in accordance with the requirements of the MNSR Permit Program at 40 CFR Part 49. These permit actions do not authorize the construction of any new emission sources, or emission increases from existing units, nor does it otherwise authorize any other physical modifications to the facility or its operations. The permit actions are only intended to incorporate required and requested emission limits and provisions from the permit applications and a September 24, 2013, Federal Combined Complaint and Consent Agreement and Final Order (CAFO)

between the EPA and Berry Petroleum Company (Docket No. CAA-08-2013-0014).

The proposed permits reflects the incorporation of the legally and practically enforceable emissions limitations of the CAFO as it pertains to the Section 22 Compressor Station and Section 23 Compressor Station. Under the CAFO Berry agreed to voluntarily accept enforceable restrictions on its potential to emit at each compressor station, and to apply for and receive a synthetic minor MNSR permits memorializing those restrictions after termination of the CAFO. The transfer of the requirements from the CAFO, in addition to the incorporation of limits requested by Berry in the applications, consolidates the requirements originating from these documents into one document. Upon compliance with the permits, Berry will have legally and practically enforceable reductions in emissions that can be used when determining the applicability of other CAA requirements, such as PSD, Part 71, and NESHAP.

The facilities are located within the federally-recognized exterior boundaries of the Uintah and Ouray Indian Reservation in Uintah County, Utah. The site locations are given below:

Section 22 Compressor Station	Section 23 Compressor Station
NW ¼, SW ¼ Sec 22 T5S R4W	NE ¼, SE ¼ Sec 23 T5S R5W
Latitude: 40.01836	Latitude: 40.02993
Longitude: -110. 19814	Longitude: -110. 40752

Conclusion

The EPA has concluded that the proposed synthetic MNSR permit actions will have "*No effect*" on listed species or critical habitat for the following reasons:

1. The proposed permit actions do not authorize the construction of any new emission sources, or emission increases from existing units, nor does it otherwise authorize any other physical modifications to the associated facilities or its operations.
2. The emissions, approved at present, from the existing facility will not increase due to the associated permit action and the emissions will continue to be well controlled at all times.

Because the EPA has determined that the federal action will have no effect, the agency will make a *"No effect"* determination. In that case, the EPA does not initiate consultation with the FWS and its obligations under Section 7 are complete.

MEMO TO FILE

DATE: April 10, 2015

SUBJECT: Uintah and Ouray Indian Reservation; Berry Petroleum Company, LLC, National Historic Preservation Act

FROM: Victoria Parker-Christensen, EPA Region 8 Air Program

TO: Source Files:
205c AirTribal UO Berry Petroleum Company, LLC, Section 22 Compressor Station
SMNSR-UO-000876-2014.001
FRED # 105319

205c AirTribal UO Berry Petroleum Company, LLC, Section 23 Compressor Station
SMNSR-UO-000877-2014.001
FRED # 105318

Section 106 of the National Historic Preservation Act (NHPA) requires federal agencies to take into account the effects of their undertakings on historic properties and afford the Advisory Council on Historic Preservation (ACHP) a reasonable opportunity to comment with regard to such undertakings. Under the ACHP's implementing regulations at 36 C.F.R. Part 800, Section 106 consultation is generally with state and tribal historic preservation officials in the first instance, with opportunities for the ACHP to become directly involved in certain cases. An "undertaking" is "a project, activity, or program funded in whole or in part under the direct or indirect jurisdiction of a Federal agency, including those carried out by or on behalf of a Federal agency; those carried out with Federal financial assistance; and those requiring a Federal permit, license or approval." 36 C.F.R. § 800.16(y).

Under the NHPA Section 106 implementing regulations, if an undertaking is a type of activity that has the potential to cause effects on historic properties, assuming any are present, then federal agencies consult with relevant historic preservation partners to determine the area of potential effect (APE) of the undertaking, to identify historic properties that may exist in that area, and to assess and address any adverse effects that may be caused on historic properties by the undertaking. If an undertaking is a type of activity that does not have the potential to cause effects on historic properties, the federal agency has no further obligations. 36 C.F.R. § 800.3(a)(1).

This memorandum describes EPA's efforts to assess potential effects on historic properties in connection with issuing draft Federal Tribal Minor New Source Review (MNSR) permits to Berry Petroleum Company, LLC (Berry), for two compressor stations located within the exterior boundaries of the Uintah and Ouray Indian Reservation in Uintah County, Utah. As explained further below, EPA is finding that the proposed action does not have the potential to cause effects on historic properties, even assuming such historic properties are present.

Permit Request

The EPA received applications from the Berry requesting synthetic minor permits for the Section 22 Compressor Station and Section 23 Compressor Station in accordance with the requirements of the MNSR Permit Program at 40 CFR Part 49. These permit actions do not authorize the construction of any new emission sources, or emission increases from existing units, nor does it otherwise authorize any other physical modifications to the facility or its operations. The permit actions are only intended to incorporate required and requested emission limits and provisions from the permit applications and a September 24, 2013, Federal Combined Complaint and Consent Agreement and Final Order (CAFO) between the EPA and Berry Petroleum Company (Docket No. CAA-08-2013-0014).

The proposed permits reflects the incorporation of the legally and practically enforceable emissions limitations of the CAFO as it pertains to the Section 22 Compressor Station and Section 23 Compressor Station. Under the CAFO Berry agreed to voluntarily accept enforceable restrictions on its potential to emit at each compressor station, and to apply for and receive a synthetic minor MNSR permits memorializing those restrictions after termination of the CAFO. The transfer of the requirements from the CAFO, in addition to the incorporation of limits requested by Berry in the applications, consolidates the requirements originating from these documents into one document. Upon compliance with the permits, Berry will have legally and practically enforceable reductions in emissions that can be used when determining the applicability of other CAA requirements, such as PSD, Part 71, and NESHAP.

The facilities are located within the federally-recognized exterior boundaries of the Uintah and Ouray Indian Reservation in Uintah County, Utah. The site locations are given below:

Section 22 Compressor Station	Section 23 Compressor Station
NW ¼, SW ¼ Sec 22 T5S R4W	NE ¼, SE ¼ Sec 23 T5S R5W
Latitude: 40.01836	Latitude: 40.02993
Longitude: -110. 19814	Longitude: -110. 40752

Finding of No Potential to Cause Effects

The EPA has reviewed the proposed actions for potential impacts on historic properties. Because the activities authorized by the EPA permits are not expected to involve any new ground disturbance, the Agency finds that these projects do not have the potential to cause effects on historic properties, even assuming any are present.

State and Tribal Consultation

Because these undertakings are a type of activity that does not have the potential to cause effects on historic properties, the EPA has no further obligations under Section 106 of the National Historic Preservation Act or 36 C.F.R. part 800.

Smith, Claudia

From: Minnie Grant <minnieg@utetribe.com>
Sent: Tuesday, March 03, 2015 1:29 PM
To: Smith, Claudia
Subject: RE: Berry Petroleum Company

Thank-you, I did find the locations I apologize, thank-you for your assistance. minnie

---

From: Smith, Claudia [mailto:Smith.Claudia@epa.gov]
Sent: Tuesday, March 03, 2015 1:28 PM
To: Minnie Grant
Subject: RE: Berry Petroleum Company

Minnie,

You can find the locations within the attached report. For ease of locating them, Sections 22 and 23 Compressor Stations are the only two with the synthetic minor box checked.

Claudia

From: Minnie Grant [mailto:minnieg@utetribe.com]
Sent: Tuesday, March 03, 2015 1:17 PM
To: Smith, Claudia
Subject: RE: Berry Petroleum Company

Claudia,
By chance do you have a land description sec. 22 township ? range? Or latitude and longitude? Thank-you minnie

---

From: Smith, Claudia [mailto:Smith.Claudia@epa.gov]
Sent: Tuesday, March 03, 2015 12:49 PM
To: Minnie Grant
Cc: Rothery, Deirdre
Subject: RE: Berry Petroleum Company

Minnie,

I am getting those applications scanned for you and will send them along as soon as it is complete. Berry did not provide us with electronic versions. The permits are still in the process of being drafted, so I do not have anything useful to provide yet. I have attached some email correspondence with Berry for clarification of their permit request to accompany your review of the applications. If you have any questions, please contact me.

Thanks,

Claudia

Claudia Young Smith
Environmental Scientist
US EPA Region 8 Air Program
Phone: (303) 312-6520

Fax: (303) 312-6064
http://www2.epa.gov/region8/air-permitting

****
US EPA Region 8
1595 Wynkoop Street
Mail Code 8P-AR
Denver, Colorado 80202
****
This transmission may contain deliberative, attorney-client, attorney work product or otherwise privileged material. Do not release under FOIA without appropriate review. If this message has been received by you in error, you are instructed to delete this message from your machine and all storage media whether electronic or hard copy.

From: Minnie Grant [mailto:minnieg@utetribe.com]
Sent: Tuesday, March 03, 2015 12:33 PM
To: Smith, Claudia
Subject: Berry Petroleum Company

Claudia,

Could you please email a copy of the synthetic minor MNSR permit application for The section 22 and section 23 compressor stations in order to review the application for our input. Thank-you,

Minnie C. Grant
Air Quality Coordinator
435.725.4900 office
mining@utetribe.com

UNITED STATES ENVIRONMENTAL PROTECTION AGENCY
REGION 8
1595 Wynkoop Street
DENVER, CO 80202-1129
Phone 800-227-8917
http://www2.epa.gov/aboutepa/epa-region-8-mountains-and-plains

FEB - 5 2015

Ref: 8P-AR

Honorable Gordon Howell, Chairman
Ute Indian Tribe
P.O. Box 70
Fort Duchesne, UT 84026

Re: Notification of Consultation and Coordination on Issuance of Two Synthetic Minor New Source Review Permits for Existing Natural Gas Compressor Stations on the Uintah and Ouray Indian Reservation

Dear Chairman Howell:

The U.S. Environmental Protection Agency Region 8 is initiating consultation and coordination with the Ute Indian Tribe on issuance of two Clean Air Act air pollution control permits for natural gas compressor stations within the exterior boundaries of the Uintah and Ouray Indian Reservation in Duchesne County, Utah. In accordance with the Federal Tribal Minor New Source Review (MNSR) permitting program found at 40 CFR Part 49, Berry Petroleum Company (Berry), a wholly owned subsidiary of Linn Energy, is currently requesting two permits with federally enforceable synthetic minor air pollutant emission limits for the existing Section 22 and Section 23 Compressor Stations.

The Section 22 and Section 23 Compressor Stations compress and treat (dehydrate) field natural gas received from production sites (well pads) in the area. Berry submitted synthetic minor MNSR permit applications for the stations to recognize the installation and operation of enclosed combustors on tri-ethylene glycol dehydration units and oxidation catalysts on compressor engines operating at the facilities to control emissions, as required by a September 24, 2013 Federal Consent Agreement and Final Order (Docket No. CAA-08-2013-0014) with the EPA.

This consultation and coordination process is being conducted based on the *EPA Policy on Consultation and Coordination with Indian Tribes* (www.epa.gov/tribal/consultation/consult-policy.htm). The EPA invites you and your designated consultation representative(s) to participate in this process. Our anticipated timeline for the consultation and coordination period is expected to extend to 30 days after you receive this letter.

Whether or not you decide to accept this offer for government-to-government consultation, the EPA plans to regularly coordinate and communicate with the Ute Tribe's Energy, Minerals and Air Director, Manuel Myore, for facilities located within the exterior boundaries of the Uintah and Ouray Indian Reservation. If you would prefer to designate an alternative representative for communication on air pollution control permitting matters, please notify us of that person's name and contact information. We will keep the Tribal government informed and will seek your input on these permits.

The EPA welcomes the opportunity to consult and coordinate with the Ute Tribe. If you choose to consult about these permit actions, we will work with your tribal government to develop a consultation plan including a description of the process we would follow, opportunity for your input and timeline for the Region to provide feedback and to complete the consultation. We will send a draft consultation plan for your review as soon as practical after we receive your reply to this letter. Our goal will be to ensure that you have an opportunity to provide Tribal input into these permit actions.

The EPA requests that you reply in writing to this letter within the next 30 days if the Ute Tribe desires to consult on these permit actions. The official EPA Region 8 contact person for this consultation and coordination process is Claudia Smith, a permit engineer on my staff.

If you would like to discuss this with me I can be reached at (303) 312-6434. If you or your staff require more specific information, the most knowledgeable person on my staff is Claudia Smith at (303) 312-6520 or smith.claudia@epa.gov. I appreciate your partnership as we work together to protect public health and the environment.

Sincerely,

Callie A. Videtich
Acting Assistant Regional Administrator
Office of Partnerships and Regulatory Assistance

cc:
Manuel Myore, Energy, Minerals and Air Director, Ute Tribe
Bruce Parqeets, Assistant Director, Energy, Minerals, and Air, Ute Indian Tribe
Minnie Grant, Energy, Minerals, and Air, Ute Indian Tribe
Ronald Wopsock, Vice-Chairman, Ute Indian Tribe
Reannin Tapoof, Executive Assistant, Ute Indian Tribe
Tony Small, Councilman, Ute Indian Tribe
Phillip Chimburas, Councilman, Ute Indian Tribe
Stewart Pike, Councilman, Ute Indian Tribe
Bruce Ignacio, Councilman, Ute Indian Tribe
Tom Fredericks, Esq., Fredericks Peebles & Morgan LLP

Smith, Claudia

From: Nick Michaelson <Nick.Michaelson@erm.com>
Sent: Monday, January 19, 2015 1:15 PM
To: Smith, Claudia
Cc: Burns, Bryan
Subject: RE: Berry Petroleum - Section 22 Compressor Station Synthetic Minor NSR Application

Ms. Smith,

Please see the comments below in response to your questions for Berry Petoleum's minor NSR permit application for their Section 22 compressor station.

Please do not hesitate to contact me or Bryan Burns with any questions.

Thank You,

Nick Michaelson
Chemical Engineer
Air Quality

ERM
123 North College Ave.
Fort Collins, CO 80524
970.212.4641
nick.michaelson@erm.com

From: Smith, Claudia [mailto:Smith.Claudia@epa.gov]
Sent: Monday, December 22, 2014 4:40 PM
To: Burns, Bryan
Subject: Berry Petroleum - Section 22 Compressor Station Synthetic Minor NSR Application

Bryan,

I have begun drafting the synthetic minor NSR permit for the Section 22 Compressor Station on the Uintah and Ouray Indian Reservation and am hoping you can clarify a few things for me to ensure I am accurately reflecting your permit request.

1. For the one compressor engine with an oxidation catalyst installed, are you requesting emission limits for all of the pollutants listed in Table 4-1 on Page 7 of the application? Specifically, the table lists CO, VOC, HCHO, CH4, CO2, and CO2e.
    a. Only looking for an enforceable limit on CO, VOC and HCHO

2. For the TEG dehydration system, are you requesting emission limits for all of the pollutants listed in Table 4-3 on Page 8 of the application? Specifically, the table lists VOC, HAP, CH4, CO2, and CO2e.
    a. Only looking for an enforceable limit on VOC and HAP

Thanks for your assistance,

Claudia

Claudia Young Smith
Environmental Scientist
US EPA Region 8 Air Program
Phone: (303) 312-6520
Fax: (303) 312-6064
http://www2.epa.gov/region8/air-permitting

****
US EPA Region 8
1595 Wynkoop Street
Mail Code 8P-AR
Denver, Colorado 80202
****
This transmission may contain deliberative, attorney-client, attorney work product or otherwise privileged material. Do not release under FOIA without appropriate review. If this message has been received by you in error, you are instructed to delete this message from your machine and all storage media whether electronic or hard copy.

This electronic message, together with any attachments, contains information from LINN Energy that may be confidential and intended solely for the use of the addressee only. If you are not the intended recipient, please note that any disclosure, dissemination, distribution or copying of this message, or any attachment, is strictly prohibited. Also, please notify the original sender by return e-mail and delete the message, along with any attachments, from your computer. Finally, the recipient should check this email and any attachments for the presence of viruses. The organization accepts no liability for any damage caused by any virus transmitted by this email.

This message contains information which may be confidential, proprietary, privileged, or otherwise protected by law from disclosure or use by a third party. If you have received this message in error, please contact us immediately at (303) 741-5050 and take the steps necessary to delete the message completely from your computer system. Thank you.

Please visit ERM's web site: http://www.erm.com

SMNSR-UO-001199-2014.002

RECEIVED
MAR 21 2014
8P - AR

Federal Minor New Source Review Program

Indian Country Synthetic Minor Permit Application

Section 23 Compressor Station

March 2014

Presented to:
Berry Petroleum Company
1999 Broadway, Suite 3700
Denver, Colorado, 80202

ENVIRONMENTAL RESOURCES MANAGEMENT
123 N. College Ave., Suite 200
Fort Collins, Colorado 80524
(970) 212-4700
www.erm.com

REPORT

Berry Petroleum Company
1999 Broadway, Suite 3700
Denver, Colorado, 80202

Synthetic Minor Permit Application

Section 23 Compressor Station

March 2014

Nicholas Michaelson
Engineer - Air Quality

Kenny Malmquist
Partner-in-Charge

Environmental Resources Management
123 N. College Ave., Suite 200
Fort Collins, Colorado 80524
(970) 212-4700
Fax: (970) 212-4739

TABLE OF CONTENTS

1.0 INTRODUCTION 1

2.0 PROCESS DESCRIPTION 2

3.0 EMISSION SOURCES 4

3.1 TEG DEHYDRATION UNIT 4

3.2 CONDENSATE STORAGE TANKS 4

3.3 HYDROCARBON CONDENSATE TRUCK LOADING 5

3.4 ENGINES 5

3.5 VAPOR COMBUSTOR 5

3.6 REBOILER 5

3.7 FUGITIVE EMISSIONS 5

3.8 COMPRESSOR BLOWDOWN EMISSIONS 6

3.9 STARTER GAS 6

3.10 COMPRESSOR ROD PACKING 6

3.11 AMINE LIQUID VESSEL 6

3.12 CRUDE OIL STORAGE TANKS 6

4.0 EMISSION LIMITATION DISCUSSION 7

4.1 DEHYDRATION UNIT CONTROLS 7

4.1.1 Proposed Limitation 7

4.1.2 Proposed Testing, Monitoring, Recordkeeping, and Reporting Requirements 8

5.0 REGULATORY APPLICABILITY 9

5.1 NATIONAL EMISSION STANDARDS FOR HAZARDOUS AIR POLLUTANTS FROM SOURCE CATEGORIES 9

5.1.1 Glycol Dehydration Unit Process Vents 9

5.1.2 Stationary Reciprocating Internal Combustion Engines (RICE) 10

5.2 SUMMARY OF NON-APPLICABLE STANDARDS AND REQUIREMENTS **11**

6.0 MODELING – AIR QUALITY IMPACT ANALYSIS **12**

7.0 ENDANGERED SPECIES ACT **13**

8.0 NATIONAL HISTORIC PRESERVATION ACT **14**

LIST OF TABLES

Table 4-1 Enclosed combustor emission summary
Table 4-2 Proposed enclosed combustor requirements
Table 5-1 Requirements for Existing Stationary RICE Located at Area Source of HAP Emissions
Table 5-2 Summary of Non-Applicable CAA Requirements

LIST OF APPENDICES

Appendix A *Application Forms*
Appendix B *Emissions Calculations and Supporting Documentation*

1.0 *INTRODUCTION*

Berry Petroleum Company (Berry) owns and operates the Section 23 Compressor Station (facility) located within Indian Country in Duchesne County, Utah. The facility is designed to compress and treat (dehydrate) field gas received from Berry's Brundage Canyon production (well pad) sites. Berry's 9-23X crude oil well is co-located with the facility.

The facility is located in an area designated as attainment and is currently a minor source of emissions as defined in 40 CFR §49.152. A registration was initially submitted to the US EPA Region 8 on March 1st, 2013 in accordance with the requirements of §49.160. An updated registration was later submitted on November 20, 2013.

Berry has installed an enclosed combustor to control emissions from the triethylene glycol (TEG) dehydration unit still vent. By this application, Berry requests that the reductions in emissions of regulated pollutants provided by the recently installed control device be made an enforceable limitation on potential to emit through a permit action, as provided by §49.158.

A detailed facility and process description is provided in Section 2.1.

2.0 *PROCESS DESCRIPTION*

Natural gas from surrounding well sites enters the facility at a maximum rate of 12 million standard cubic feet per day (MMSCFD). The gas feeds to an inlet scrubber (knockout vessel) designed to remove liquids from the inlet stream (produced water and hydrocarbon liquid condensate). The produced water and condensate are transferred from the inlet scrubber to one of two 400 bbl storage tanks and removed from the facility via truck loadout. The gas discharged from the inlet scrubber is routed to compression.

Inlet scrubber gas is fed to the compressors via a common suction header. Compressor discharge feeds to a discharge separator and coalescing filter for removal of condensed water and compressor oils. Filter overhead gas is fed through an amine liquid-filled vessel to remove trace amounts of hydrogen sulfide (H_2S) and then to a 12 MMSCFD triethylene glycol (TEG) dehydration unit. The dehydrator removes water vapor from the gas and treated gas discharges to a separator and then to a sales line. The dehydration unit is equipped with a flash tank, and off gas from this vessel is routed to the facility inlet scrubber. The still vent of the dehydration unit is routed to an enclosed combustor to thermally oxidize volatile organic compounds (VOC), organic hazardous air pollutants (HAP) and methane.

Water and hydrocarbon liquid condensate that condenses in compressor coolers is recycled back to the inlet scrubber where flash vapors are recovered and added to the compressor inlet volumes. Liquids from the inlet scrubber are routed to two 400 bbl storage tanks and unloaded via truck for sales.

Each compressor is powered by a four stroke lean burn reciprocating internal combustion engine. All fuel burning equipment is natural gas-fired which does not contain any sulfur after passing through the amine liquid vessel. The facility is designed to operate continuously throughout the year.

Crude oil and fresh water production are also located within the boundaries of the facility. Oil is pumped from the well using a natural-gas fired pump jack engine into two heated 400 bbl storage tanks before being trucked out for sales. A natural-gas fired generator powers a submersible pump which sends water to a nearby water flood (injection) facility. Further detail on each emission unit is provided in the following section.

Section 23 Compressor Station
Process Flow Diagram

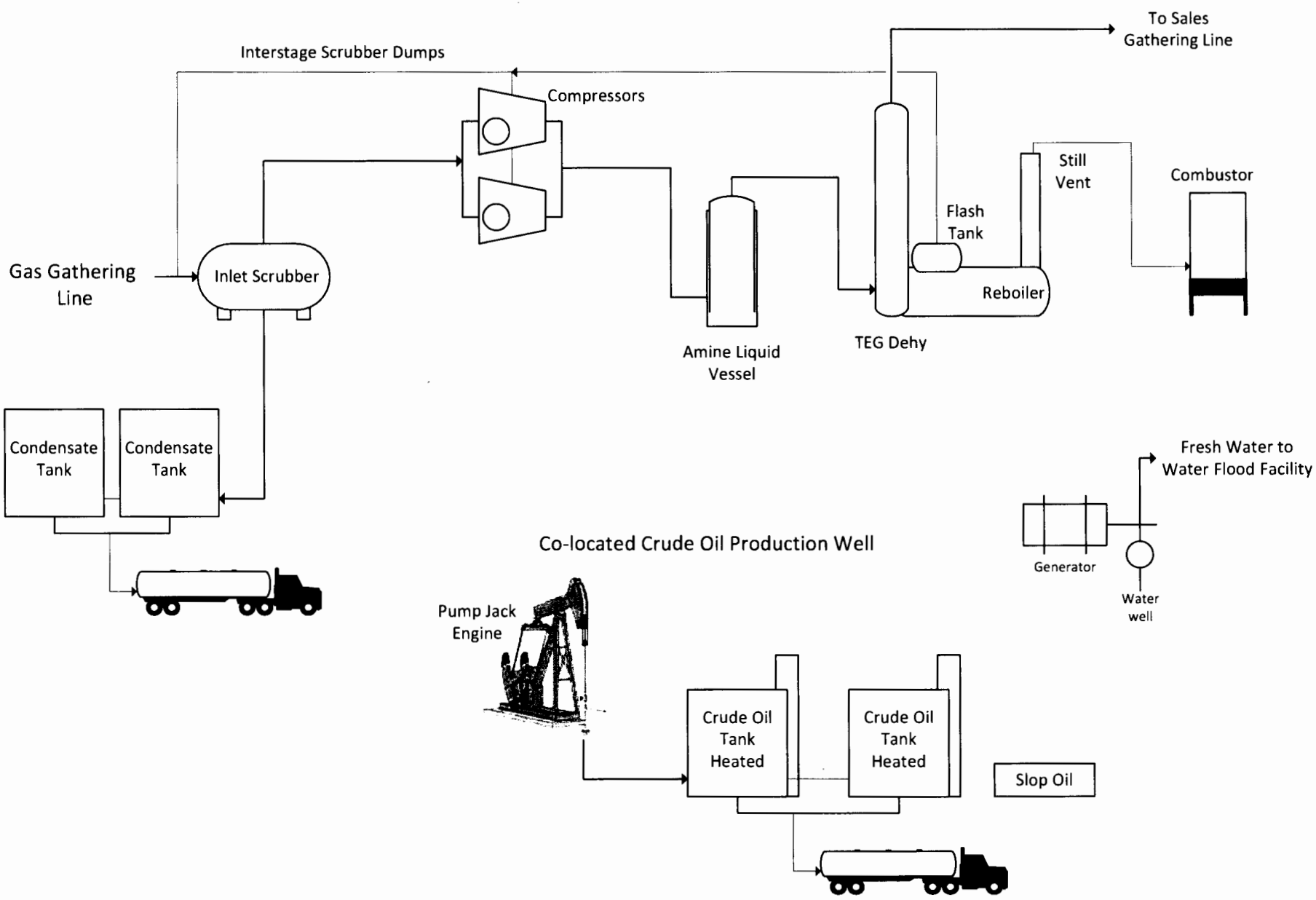

3.0 EMISSION SOURCES

Information pertaining to the emissions from each of the emitting units is provided below. Manufacturer and actual process data, when available, were used for emissions calculations. Process simulations were preferred to evaluate the tank and TEG Dehydration unit emission potentials. However, for many sources the EPA's AP-42 Compilation of Air Pollutant Emission Factors (AP-42) is utilized.

Process simulation was conducted to evaluate the tank and TEG Dehydration unit emission potentials. Detailed ProMax ® simulation outputs are included in Appendix B. Detailed emission calculations and supporting documentation (such as manufacturer emission data sheets) are also provided in Appendix B.

3.1 TEG DEHYDRATION UNIT

Gas/vapor emissions from the 12.0 MMscfd dehydration unit still vent are routed to a combustor. VOC and HAP emissions from the still vent are reduced by 98% though the combustor. The flash tank off gas is routed to the facility inlet scrubber in a closed system. The TEG Unit process vents emit or have the potential to emit VOC, HAP and greenhouse gas (GHG). Emissions from the TEG unit are estimated using ProMax ® V3.2. Emission calculations and the ProMax ® results for the dehydration unit are provided in Appendix B.

As the facility is an area source for purposes of 40 CFR Part 63 subpart HH, the dehy is currently subject to the optimum glycol circulation rate requirement of §63.763(d)(2)(i). This optimum circulation rate is used to determine the current (pre-change) uncontrolled emissions.

3.2 CONDENSATE STORAGE TANKS

Two 400 barrel (each) atmospheric tanks are used to handle condensate at the Facility. They receive hydrocarbon liquid condensate and water from the inlet scrubber. Flashing, working and breathing losses from the condensate tanks are estimated using ProMax® V3.2, which utilizes AP-42 Ch 7 methodology to determine working and breathing losses.

As demonstrated by the ProMax® simulation diagrams included in Appendix B, the TEG circulation rate limits the overall facility gas throughput. This consequently limits the amount of hydrocarbon liquids that will be produced, therefore pre-change emissions for the storage tanks and truck loading vary from the post-change emissions.

3.3 *HYDROCARBON CONDENSATE TRUCK LOADING*

Hydrocarbon liquid condensate is loaded to truck from the oil and condensate tank batteries. Emissions from truck loading were estimated using ProMax® V3.2. The software relies on Equation 1 from AP-42, Chapter 5.2 Transportation and Marketing of Petroleum Liquids, dated June 2008.

3.4 *ENGINES*

Engines at the facility are natural gas fired. Specifications are included with the emission calculations in Appendix B as available.

Emissions from these units have been estimated using a combination of manufacturer and AP-42 emission factors. None of the engines are subject to numerical emission standards under federal Clean Air Act programs – see discussion in section 5.

3.5 *VAPOR COMBUSTOR*

The Facility utilizes an enclosed vertical combustor designed to oxidize (combust) hydrocarbons from the dehydrator still vent. The combustor is equipped with a continuous pilot to ignite combustible gas/vapor vented from the still vent. Combustion emissions from the control device were estimated using emission factors from USEPA AP-42 Chapter 1.4, Natural Gas Combustion, dated July 1998 for small boilers, maximum simulated vent flow rates from ProMax®, and annual hours of operation.

3.6 *REBOILER*

Emissions from the natural gas-fired TEG reboiler was estimated using emission factors from USEPA AP-42 Chapter 1.4, Natural Gas Combustion, dated July 1998 for small boilers, the maximum design heat input rating, and annual hours of operation.

3.7 *FUGITIVE EMISSIONS*

Fugitive VOC emissions due to equipment leaks are estimated using equipment leak factors reported in EPA-453/R-95-026. A detailed count of process valves, connectors, flanges and other component types is not available, rather an approximate count was generated to account for the equipment present at the facility. This estimate is provided in Appendix B.

3.8 COMPRESSOR BLOWDOWN EMISSIONS

Compressor blowdown emissions have been estimated based on the compressor size. The ideal gas law was assumed representative for the emitted vapors and was used in conjunction with site-specific blowdown frequencies to estimate emissions. A facility inlet gas analysis was used to speciate emissions. The blowdown emission calculation is illustrated in Appendix B.

3.9 STARTER GAS

Compressor starter emissions were estimated using the starter's fuel usage and facility's representative gas composition. The starter was assumed to operate for thirty seconds per starting event with a conservatively estimated fifty-two starting events per year for each engine. Appendix B contains the starter gas emission calculations.

3.10 COMPRESSOR ROD PACKING

Compressor rod packing emissions were estimated using Canadian/GRI research report measured vent volumes and the ideal gas law. Appendix B contains the rod packing emission calculations.

3.11 AMINE LIQUID VESSEL

The amine liquid vessel is a closed system which scavenges for trace amounts of H_2S present in the gas. The amine liquid does not undergo regeneration and no emissions are associated with this unit.

3.12 CRUDE OIL STORAGE TANKS

Two 400 barrel (each) atmospheric tanks are used to store crude oil from the on-site well. Each tank is heated with a 0.5 MMBtu/hr heater. A field-wide emission factor was developed for the crude oil. Using oil samples from across the field flashing, working and breathing losses were estimated with ProMax® V3.2.

As indicated in the process flow diagram, there is a small 100 bbl or less 'slop oil' tank associated with the oil tanks. This tank is used to drain excess water from the bottom of the crude tanks and is unheated. Emissions from the tank are negligible.

4.0 EMISSION LIMITATION DISCUSSION

The following information is provided for the TEG unit still vent which Berry intends to install air pollution control:

- The proposed limitation and a description of its effect on current allowable/potential to emit (PTE).
- The proposed testing, monitoring, recordkeeping, and reporting requirements to be used to demonstrate and assure compliance with the proposed limitation.
- A description of estimated efficiency of air pollution control equipment under present or anticipated operating conditions, including documentation of the manufacturer specifications and guarantees.
- Estimates of the Post-Change Allowable Emissions that would result from compliance with the proposed limitation, including all calculations for the estimates.
- Estimates of the potential emissions of Greenhouse Gas (GHG) pollutants.

4.1 DEHYDRATION UNIT CONTROLS

4.1.1 Proposed Limitation

The TEG still vent emissions will be routed to a combustor for control of VOC and methane. The combustor will have a ninety-eight percent (98%) control efficiency.

Table 4-1. Enclosed combustor emission summary

Pollutant	Current UNCONTROLLED Emissions (tpy)	Enforceable CONTROLLED Emissions (tpy)	Net Change (tpy)	Control reduction %
	Allowable/PTE	Allowable/PTE		
NOx	-	0.05	0.05	-
CO	-	0.04	0.04	-
VOC	10.02	0.38	-9.64	96%
HAPs	3.72	0.14	-3.58	96%
CH4	0.59	0.02	-0.57	96%
CO2	0.18	22.28	22.10	-
CO2e	14.92	22.83	7.91	-53%

With enforceable limitations on potential to emit VOC and HAP provided by the combustor, the TEG unit will no longer be subject to the optimum TEG circulation rate requirement of §63.764(d)(2), as provided by the exemption at §63.764(e)(1)(ii). The controlled emissions, potential to emit, are provided based on the maximum glycol circulation rate, as required by §63.760(e)(2)(ii). Hence, the cause of the <98% control efficiency reported in table 4-1.

4.1.2 Proposed Testing, Monitoring, Recordkeeping, and Reporting Requirements

The Colorado Department of Public Health and Environment – Air Pollution Control Division has published operating and maintenance guidance for glycol dehydrators. This guidance provides options for general monitoring and recordkeeping activities for any control devices used. In addition, the manufacturer of the enclosed combustor, Messco, provides recommended maintenance and monitoring activities to ensure proper operation of the unit. Berry proposes to follow a combination of these recommended activities as outlined in the table below:

Table 4-2. Proposed enclosed combustor requirements

Type	Proposed Requirement
Testing	No testing requirements
Inspections	Monthly and bi-annual inspections according to manufacturer recommendations
	Weekly pilot light check
	Weekly visible emissions check
Recordkeeping	Maintenance conducted on unit
	Inspections
Reporting	Maintenance and inspection records upon request

5.0 *REGULATORY APPLICABILITY*

This section provides a discussion of federal Clean Air Act ("CAA") standards that are applicable or not applicable to the Facility.

5.1 *NATIONAL EMISSION STANDARDS FOR HAZARDOUS AIR POLLUTANTS FROM SOURCE CATEGORIES*

The following federal National Emission Standards for Hazardous Air Pollutants for Source Categories ("NESHAP") set out in 40 CFR Part 63 are or may be relevant to certain "affected facilities" operated by Berry at the Facility:

Subpart HH—National Emission Standards for Hazardous Air Pollutants From Oil and Natural Gas Production Facilities (§§63.760 - 60.777)

Subpart ZZZZ - National Emissions Standards for Hazardous Air Pollutants for Stationary Reciprocating Internal Combustion Engines (§§63.6580 - 60.6675)

5.1.1 *Glycol Dehydration Unit Process Vents*

The Facility is within the crude oil and natural gas production source category, as described in §63.760. The Facility is a production field facility and an area source that is not located within any UA plus offset and UC boundary (as defined in §63.761). Actual annual emissions of benzene from the TEG Unit are less than 0.90 megagram per year (1.0 ton per year), as determined by the procedures specified in §63.772(b)(2). The TEG Unit is therefore exempt from the requirements set out at §63.764(d)(2), as provided by §63.764(e)(1)(ii).

As provided by §§63.764(e)(1) and 63.774(d)(1)(ii), Berry is required to:

- Maintain records of the actual average benzene emissions (in terms of benzene emissions per year) as determined in accordance with §63.772(b)(2)

No other requirements of Subpart HH apply. An owner or operator of a TEG dehydration unit located at an area source that meets the criteria in §63.764(e)(1)(i) or §63.764(e)(1)(ii) is exempt from the reporting requirements for area sources in §63.774 (c)(1) through (7) for that unit. [§63.774(c)(8)]

5.1.2 *Stationary Reciprocating Internal Combustion Engines (RICE)*

The facility is an area source which operates four existing stationary RICE.

The two existing compressor engines are four stroke lean burn engines with greater than 500 horsepower. These engines are considered remote as defined in §63.6675. The generator is a four stroke rich burn engine and the pump jack is a two stroke lean burn engine, both are less than 100 hp. All the engines must follow applicable requirements as stated in §§63.6603, 63.6640 and in Table 2D to the subpart, summarized in Table 1 below. During periods of startup, Berry will minimize the engine's time spent at idle and minimize the engine's startup time at startup to a period needed for appropriate and safe loading of the engine, not to exceed 30 minutes, after which time the non-startup emission limitations apply. *Note: The engines are not subject to numerical emission limitations.*

Table 5-1. Requirements for Existing Stationary RICE Located at Area Source of HAP Emissions

For each . . .	Meet the following requirement, except during periods of startup . . .
6. Non-emergency, non-black start 2SLB stationary RICE ≤500 HP	a. Change oil and filter every 4,320 hours of operation or annually, whichever comes first; b. Inspect spark plugs every 4,320 hours of operation or annually, whichever comes first, and replace as necessary; and c. Inspect all hoses and belts every 4,320 hours of operation or annually, whichever comes first, and replace as necessary.
8. Non-emergency, non-black start 4SLB remote stationary RICE >500 HP	a. Change oil and filter every 2,160 hours of operation or annually, whichever comes first; b. Inspect spark plugs every 2,160 hours of operation or annually, whichever comes first, and replace as necessary; and c. Inspect all hoses and belts every 2,160 hours of operation or annually, whichever comes first, and replace as necessary.
10. Non-emergency, non-black start 4SRB stationary RICE ≤500 HP	a. Change oil and filter every 1,440 hours of operation or annually, whichever comes first; b. Inspect spark plugs every 1,440 hours of operation or annually, whichever comes first, and replace as necessary; and c. Inspect all hoses and belts every 1,440 hours of operation or annually, whichever comes first, and replace as necessary.

Berry will also comply with provisions of §63.6603(f) for the affected stationary RICE meeting the definition of remote stationary RICE in §63.6675 of this subpart as of October 19, 2013. Berry will evaluate the status of the stationary RICE at the facility every 12 months and keep

records of the initial and annual evaluation of the status of the engines. If an evaluation indicates that the stationary RICE no longer meet the definition of "remote stationary RICE" in § 63.6675, Berry will comply with all of the requirements for existing non-emergency SI 4SLB stationary RICE with a site rating of more than 500 HP located at area sources of HAP that are not remote stationary RICE (Item 9 of Table 2D to Subpart ZZZZ) within 1 year of the evaluation.

5.2 *SUMMARY OF NON-APPLICABLE STANDARDS AND REQUIREMENTS*

Table 1 provides a summary of federal CAA requirements that are not applicable to the Facility. A regulatory basis is described and cited for each negative declaration.

Table 5-2. Summary of Non-Applicable CAA Requirements

Equipment	Standard or Requirement	Basis and Citation
Facility-Wide	Subpart OOOO (40 CFR §60.5375 et seq.)	Facility does not contain any gas well affected facilities [§63.5365(a)]
Facility-Wide	Subpart OOOO (40 CFR §60.5380 et seq.)	Facility does not contain any centrifugal compressor affected facilities [§63.5365(b)]
Reciprocating Compressors	Subpart OOOO (40 CFR §60.5385 et seq.)	Reciprocating compressors commenced construction prior to August 23, 2011 [§63.5365(c)]
Storage Vessels (containing hydrocarbon condensate and produced water)	Subpart OOOO (40 CFR §60.5395 et seq.)	Facility does not contain any storage vessel affected facilities – each storage vessel commenced construction prior to August 23, 2011 [§63.5365(e)]
Facility-Wide	Subpart OOOO (40 CFR §§60.5400–60.5408 et seq.) Subpart HH (40 CFR §63.769 et seq.)	Facility is not a natural gas processing plant, as defined at §60.5430 and §63.761. Facility is not a major source of HAP.
Engines	40 CFR Part 60 Subpart JJJJ (§§60.4230–60.4248)	Compressor engines are stationary spark ignition RICE with 500 < hp < 1,350 and all four engines were manufactured prior to January 1, 2008. [§60.4230(a)(4)(ii)]
Storage Vessels	Subpart HH (40 CFR §63.769 et seq.)	Area source Facility does not contain any "storage vessel with the potential for flash emissions", as defined at §63.761.

This request for enforceable limitations will reduce facility-wide emissions decreasing any impacts from the facility upon the surrounding ambient air.

7.0 *ENDANGERED SPECIES ACT*

The facility is an existing source and no new construction is proposed with this application which would expand the facility boundary. No wildlife habitat has the potential to be impacted by the action requested in this application.

8.0 *NATIONAL HISTORIC PRESERVATION ACT*

The facility is an existing source and no new construction is proposed with this application which would expand the facility boundary or disrupt the surrounding cultural resources, if present.

Appendix A
Application Forms

OMB Control No. 2060-0003
Approval expires 04/30/2012

United States Environmental Protection Agency **Program** **Address** **Phone** **Fax** **Web address**	*U.S. EPA Region 8* *Federal Minor NSR Permit Coordinator* *1595 Wynkoop Street, 8P-AR* *Denver, CO 80505-1129* *(303) 312-6431* *http://www2.epa.gov/region8/air-permitting*

FEDERAL MINOR NEW SOURCE REVIEW PROGRAM IN INDIAN COUNTRY

Application for New Construction

(Form NEW)

Please check all that apply to show how you are using this form:

☐**Proposed Construction of a New Source**
☐**Proposed Construction of New Equipment at an Existing Source**
☐**Proposed Modification of an Existing Source**
☒**Other – Please Explain**
- Request for enforceable emission limitations

Please submit information to:

Federal Minor NSR Permit Coordinator
U.S. EPA Region 8
1595 Wynkoop Street, 8P-AR
Denver, CO 80505-1129
(303) 312-6431

A. GENERAL SOURCE INFORMATION

1. (a) **Company Name** **Berry Petroleum Company** (b) **Operator Name** **Berry Petroleum Company**	2. **Source Name** Section 23 Compressor Station
3. Type of Operation Compressor Station	4. Portable Source? Yes **No** 5. Temporary Source? Yes **No**
6. NAICS Code 211111	7. SIC Code 1311
8. Physical Address (home base for portable sources) See below	

9. Reservation* Uintah and Ouray	10. County* Duchesne	11a. Latitude* 40.02993	11b. Longitude* -110.40752
12a. Quarter Quarter Section* NESE	12b. Section* 23	12c. Township* 5S	12d. Range* 5W

*Provide all proposed locations of operation for portable sources

B. PREVIOUS PERMIT ACTIONS (Provide information in this format for each permit that has been issued to this source. Provide as an attachment if additional space is necessary)

Source Name on the Permit **Facility has not been issued any previous permits**
Permit Number (xx-xxx-xxxxx-xxxx.xx)
Date of the Permit Action

Source Name on the Permit
Permit Number (xx-xxx-xxxxx-xxxx.xx)
Date of the Permit Action

Source Name on the Permit
Permit Number (xx-xxx-xxxxx-xxxx.xx)
Date of the Permit Action

Source Name on the Permit
Permit Number (xx-xxx-xxxxx-xxxx.xx)
Date of the Permit Action

Source Name on the Permit
Permit Number (xx-xxx-xxxxx-xxxx.xx)
Date of the Permit Action

C. CONTACT INFORMATION

Company Contact **Burns, Bryan O.**	Title EHS Representative
Mailing Address 1999 Broadway, Suite 3700, Denver, Co 80202	
Email Address bburns@linnenergy.com	
Telephone Number (303) 999-4400	Facsimile Number (303) 999-4401
Operator Contact (if different from company contact) **Same as Owner**	Title
Mailing Address	
Email Address	
Telephone Number	Facsimile Number
Source Contact **Burns, Bryan O.**	Title EHS Representative
Mailing Address 1999 Broadway, Suite 3700, Denver, Co 80202	
Email Address bburns@linnenergy.com	
Telephone Number (303) 999-4400	Facsimile Number (303) 999-4401
Compliance Contact **Same as Source Contact**	Title
Mailing Address	
Email Address	
Telephone Number	Facsimile Number

OMB Control No. 2060-0003
Approval expires 04/30/2012

United States Environmental Protection Agency Program Address Phone Fax Web address	*U.S. EPA Region 8* *Federal Minor NSR Permit Coordinator* *1595 Wynkoop Street, 8P-AR* *Denver, CO 80505-1129* *(303) 312-6431* *http://www2.epa.gov/region8/air-permitting*

FEDERAL MINOR NEW SOURCE REVIEW PROGRAM IN INDIAN COUNTRY

Application For Synthetic Minor Limit

(Form SYNMIN)

Please submit information to:

Federal Minor NSR Permit Coordinator
U.S. EPA Region 8
1595 Wynkoop Street, 8P-AR
Denver, CO 80505-1129
(303) 312-6431

A. GENERAL INFORMATION

Company Name **Berry Petroleum Company**	**Source Name** **Section 23 Compressor Station**
Company Contact or Owner Name **Burns, Bryan O.**	Title EHS Representative
Mailing Address 1999 Broadway, Suite 300, Denver, CO 80202	
Email Address bburns@linnenergy.com	
Telephone Number (303) 999-4400	Facsimile Number (303) 999-4401

B. ATTACHMENTS – See Section 4.0

For each criteria air pollutant, hazardous air pollutant and for all emission units and air pollutant-generating activities to be covered by a limitation, include the following:

Item 1 - The proposed limitation and a description of its effect on current actual, allowable and the potential to emit.
Item 2 - The proposed testing, monitoring, recordkeeping, and reporting requirements to be used to demonstrate and assure compliance with the proposed limitation.

Item 3 - A description of estimated efficiency of air pollution control equipment under present or anticipated operating conditions, including documentation of the manufacturer specifications and guarantees.

Item 4 - Estimates of the Post-Change Allowable Emissions that would result from compliance with the proposed limitation, including all calculations for the estimates.
Item 5 – Estimates of the potential emissions of Greenhouse Gas (GHG) pollutants:

Appendix B
Emissions Calculations and Supporting Documentation

Company: Berry Petroleum
Subject: Section 23 Compressor Station
Engine: Facility Emissions Summary

Facility Wide Potential to Emit - Uncontrolled

ID	Unit	NOx	CO	VOC	HAP	CO2	CH4	N2O	CO2e	Bz	Tl	Ebz	Xy	HCOH	nHx
		tpy	tpy	tpy	tpy	tpy	tpy	tpy	tpy	tpy	tpy	tpy	tpy	tpy	tpy
RICE-01	Cat G3516 LE	17.51	31.99	5.25	4.49	6,573	20.43	0.01	7,087	0.02	0.02	-	0.01	3.62	0.05
RICE-02	Cat G3516 LE	17.51	34.44	5.25	4.37	6,456	21.95	0.01	7,008	0.02	0.02	-	0.01	3.50	0.05
RICE-03	Olympian Genset	5.56	9.36	0.07	0.08	277	0.58	-	291	0.004	-	0.0001	0.0005	0.05	-
RICE-04	AJAX E-42	1.70	1.27	0.19	0.15	224	2.51	-	287	0.001	0.001	-	0.0003	0.12	0.002
HTR-01	Dehy Reboiler	0.09	0.08	0.01	0.0001	113.3	0.002	-	113.3	-	-	-	-	0.0001	-
DEHY-01	Dehy Still Vent	-	-	10.0	3.7	0.34	1.11	-	14.9	2.77	0.36	0.002	0.004	-	0.59
T1-T2	Condensate Tanks	-	-	3.95	0.160	0.08	2.30	-	57.5	0.01	0.01	0.0003	0.001	-	0.01
T3-T4	Crude Oil Tanks	-	-	1.44	0.308	0.016	0.09	-	2.3	0.029	0.027	0.005	0.23	-	0.23
Cload	Condensate Loading	-	-	0.75	0.006	0.01	0.054	-	1.35	0.0004	0.0004	0.00004	0.0001	-	0.01
Oload	Crude Oil Loading	-	-	0.21	0.041	0.003	0.018	-	0.44	0.0046	0.0036	0.00056	0.0011	-	0.030
CBD	Compressor Blowdown	-	-	4.17	0.18	0.17	12.46	-	311.8	0.01	0.01	0.002	0.01	-	0.14
CRPV	Rod Packing Vents	-	-	6.09	0.26	0.25	18.20	-	455.2	0.02	0.02	0.003	0.01	-	0.21
STR	Starter Gas	-	-	0.33	0.01	0.01	0.99	-	22.8	0.001	0.001	0.0001	0.001	-	0.01
Total		**42.38**	**77.14**	**37.74**	**13.78**	**13,644**	**80.70**	**0.02**	**15,653**	**2.89**	**0.46**	**0.01**	**0.27**	**7.29**	**1.34**
FUG	Fugitive Leaks	-	-	6.20	0.14	0.15	8.96	-	224	0.01	0.01	0.001	0.005	-	0.12
Total		**42.38**	**77.14**	**43.95**	**13.92**	**13,644**	**89.66**	**0.02**	**15,877**	**2.90**	**0.47**	**0.01**	**0.27**	**7.29**	**1.45**

Facility Wide Potential to Emit - Controlled

ID	Unit	NOx	CO	VOC	HAP	CO2	CH4	N2O	CO2e	Bz	Tl	Ebz	Xy	HCOH	nHx
		tpy	tpy	tpy	tpy	tpy	tpy	tpy	tpy	tpy	tpy	tpy	tpy	tpy	tpy
RICE-01	Cat G3516 LE	17.51	31.99	5.25	4.49	6,573	20.43	0.01	7,087	0.020	0.019	-	0.008	3.62	0.051
RICE-02	Cat G3516 LE	17.51	34.44	5.25	4.37	6,456	21.95	0.01	7,008	0.020	0.019	-	0.008	3.50	0.051
RICE-03	Olympian Genset	5.56	9.36	0.07	0.08	277	0.58	-	291	-	-	-	-	0.05	-
RICE-04	AJAX E-42	1.70	1.27	0.19	0.15	224	2.51	-	287	-	-	-	-	0.12	-
HTR-01	Dehy Reboiler	0.09	0.08	0.01	0.0001	113.3	0.002	-	113.3	-	-	-	-	0.0001	-
DEHY-01	Dehy Still Vent	Combustor Controlled				Combustor Controlled				Combustor Controlled					
C1	Dehy Still Combustor	0.05	0.04	0.38	0.14	22.3	0.02	-	22.8	0.10	0.01	0.0001	0.000	-	0.022
T1-T2	Condensate Tanks	-	-	5.88	0.27	0.13	3.96	-	99.2	0.0191	0.010	0.00046	0.0014	-	0.240
T3-T4	Crude Oil Tanks	-	-	1.44	0.31	0.02	0.09	-	2.3	0.03	0.03	0.0047	0.230	-	0.23
Cload	Condensate Loading	-	-	1.31	0.011	0.017	0.095	-	2.38	0.00	0.00	0.0001	0.000	-	0.01
Oload	Crude Oil Loading	-	-	0.21	0.04	0.00	0.02	-	0.4	0.00	0.00	0.0006	0.001	-	0.03
CBD	Compressor Blowdown	-	-	4.17	0.18	0.17	12.46	-	311.8	0.012	0.013	0.002	0.006	-	0.14
CRPV	Rod Packing Vents	-	-	6.09	0.26	0.25	18.20	-	455.2	0.02	0.02	0.0026	0.009	-	0.21
STR	Starter Gas	-	-	0.33	0.01	0.01	0.99	-	22.8	0.0009	0.0010	0.00014	0.0005	-	0.01
Total		**42.42**	**77.18**	**30.59**	**10.31**	**13,666**	**81.31**	**0.02**	**15,703**	**0.23**	**0.13**	**0.010**	**0.27**	**7.29**	**1.00**
FUG	Fugitive Leaks	-	-	6.20	0.14	0.15	8.96	-	224	0.01	0.01	0.0014	0.005	-	0.12
Total		**42.42**	**77.18**	**29.48**	**9.88**	**13,666**	**86.22**	**0.02**	**15,826**	**0.19**	**0.10**	**0.007**	**0.04**	**7.29**	**0.65**

Net Increase/Decrease:	**0.05**	**0.04**	**-14.47**	**-4.04**	**21.85**	**-3.44**	**0.00**	**-50.94**	**-2.71**	**-0.38**	**-0.01**	**-0.24**	**0.00**	**-0.80**

Company: Berry Petroleum
Subject: Section 23 Compressor Station
Engine: Caterpillar Model G3516 4 stroke low emission NG-fired engines (US101319/02)

Engine bhp (site rating):	1,209
Engine BSFC (Btu/hp-hr):	8,668
Heat Input Capacity (MMBtu/hr):	10.5
Fuel LHV (Btu/scf,Btu/gal):	1,068
Fuel (MMscf/yr,gal/yr):	86.0
Hours/year:	8,760

	Emission Factor[a]	Estimated Individual Unit Emissions[b]	
	Uncontrolled Basis	Uncontrolled	Uncontrolled
Pollutant	lb/MMBtu	lb/hr	tpy
CRITERIA			
NOx (100% load)	1.5 g/bhp-hr	4.00	17.5
CO (100% load)	2.74 g/bhp-hr	7.30	32.0
SO_2	5.88E-04	0.01	0.03
VOC	0.45 g/bhp-hr	1.20	5.3
PM10	7.71E-05	8.08E-04	0.00
PM2.5	7.71E-05	8.08E-04	0.00
GHGs			
CO_2	563 g/bhp-hr	1,501	6,572.72
CH_4	1.75 g/bhp-hr	4.66	20.43
N2O	2.34E-04	2.45E-03	0.01
CO2e			7,087
HAPs			
1,3-Butadiene	2.67E-04	2.80E-03	0.01
2,2,4-Trimethylpentane	2.50E-04	2.62E-03	0.01
Acetaldehyde	8.36E-03	8.76E-02	0.38
Acrolein	5.14E-03	5.39E-02	0.24
Benzene	4.40E-04	4.61E-03	0.02
Biphenyl	2.12E-04	2.22E-03	0.01
Formaldehyde	0.31 g/bhp-hr	8.26E-01	3.62
Methanol	2.50E-03	2.62E-02	0.11
n-Hexane	1.11E-03	1.16E-02	0.05
Naphthalene	7.44E-05	7.80E-04	0.00
Toluene	4.08E-04	4.28E-03	0.02
Xylene	1.84E-04	1.93E-03	0.01
		Total HAP	4.49

Notes: (a) Emission factors based on AP-42, Table 3.2-2 for 4-stroke lean burn engines (7/00), unless otherwise noted

'g/bhp-hr' factors provided by vendor

Assumed SO2 content of 2000 gr/MMscf

N2O emission factor based on 2009 API GHG Compendium, Table 4-5

(b) Annual Emission Rate for non-criteria pollutants

(lbs/yr) = (Emission Factor, lb/MMBtu) * (Engine bhp) * (Engine BSFC (Btu/hp-hr) / 1,000,000* (8760 hrs/year)

G3516

NON-CURRENT

GAS COMPRESSION APPLICATION

GAS ENGINE SITE SPECIFIC TECHNICAL DATA
Berry Petroleum Company
Section 23 - US101319/02

CATERPILLAR®

ENGINE SPEED (rpm):	1400	FUEL SYSTEM:	HPG IMPCO WITH AIR FUEL RATIO CONTROL
COMPRESSION RATIO:	8:1		
AFTERCOOLER WATER INLET (°F):	130	**SITE CONDITIONS:**	
JACKET WATER OUTLET (°F):	210	FUEL:	Gas Analysis
ASPIRATION:	TA	FUEL PRESSURE RANGE(psig):	35.0-40.0
COOLING SYSTEM:	JW+OC, AC	FUEL METHANE NUMBER:	52.4
IGNITION SYSTEM:	EIS	FUEL LHV (Btu/scf):	1068
EXHAUST MANIFOLD:	ASWC	ALTITUDE(ft):	6435
COMBUSTION:	Low Emission	MAXIMUM INLET AIR TEMPERATURE(°F):	100
NOx EMISSION LEVEL (g/bhp-hr NOx):	1.5	STANDARD RATED POWER:	1340 bhp@1400rpm
SET POINT TIMING:	25		

				MAXIMUM RATING	SITE RATING AT MAXIMUM INLET AIR TEMPERATURE		
RATING		**NOTES**	**LOAD**	**100%**	**100%**	**75%**	**55%**
ENGINE POWER	(WITHOUT FAN)	(1)	bhp	1340	1209	906	670
INLET AIR TEMPERATURE			°F	46	100	100	100
ENGINE DATA							
FUEL CONSUMPTION (LHV)		(2)	Btu/bhp-hr	7743	7847	8158	8502
FUEL CONSUMPTION (HHV)		(2)	Btu/bhp-hr	8554	8668	9012	9393
AIR FLOW (77°F, 14.7 psia)	(WET)	(3)(4)	scfm	2887	2631	1994	1414
AIR FLOW	(WET)	(3)(4)	lb/hr	12803	11665	8841	6268
INLET MANIFOLD PRESSURE		(5)	in Hg(abs)	69.0	63.2	49.7	38.6
EXHAUST TEMPERATURE - ENGINE OUTLET		(6)	°F	922	916	907	909
EXHAUST GAS FLOW (@engine outlet temp, 14.5 psia)	(WET)	(7)(4)	ft3/min	8024	7281	5492	3920
EXHAUST GAS MASS FLOW	(WET)	(7)(4)	lb/hr	13301	12121	9196	6542
EMISSIONS DATA - ENGINE OUT							
NOx (as NO2)		(8)(9)	g/bhp-hr	1.50	1.50	1.50	1.50
CO		(8)(9)	g/bhp-hr	2.70	2.74	2.79	2.71
THC (mol. wt. of 15.84)		(8)(9)	g/bhp-hr	2.40	2.49	2.73	2.82
NMHC (mol. wt. of 15.84)		(8)(9)	g/bhp-hr	0.71	0.74	0.81	0.84
NMNEHC (VOCs) (mol. wt. of 15.84)		(8)(9)(10)	g/bhp-hr	0.43	0.45	0.49	0.50
HCHO (Formaldehyde)		(8)(9)	g/bhp-hr	0.30	0.31	0.34	0.36
CO2		(8)(9)	g/bhp-hr	557	563	590	612
EXHAUST OXYGEN		(8)(11)	% DRY	7.7	7.6	7.4	7.2
HEAT REJECTION							
HEAT REJ. TO JACKET WATER (JW)		(12)	Btu/min	41945	39660	34356	30273
HEAT REJ. TO ATMOSPHERE		(12)	Btu/min	5313	4967	4168	3543
HEAT REJ. TO LUBE OIL (OC)		(12)	Btu/min	6632	6271	5432	4787
HEAT REJ. TO AFTERCOOLER (AC)		(12)(13)	Btu/min	14682	14682	7682	3466
COOLING SYSTEM SIZING CRITERIA							
TOTAL JACKET WATER CIRCUIT (JW+OC)		(14)	Btu/min	54098			
TOTAL AFTERCOOLER CIRCUIT (AC)		(13)(14)	Btu/min	15417			
A cooling system safety factor of 0% has been added to the cooling system sizing criteria.							

CONDITIONS AND DEFINITIONS

Engine rating obtained and presented in accordance with ISO 3046/1, adjusted for fuel, site altitude and site inlet air temperature. 100% rating at maximum inlet air temperature is the maximum engine capability for the specified fuel at site altitude and maximum site inlet air temperature. Max. rating is the maximum capability for the specified fuel at site altitude and reduced inlet air temperature. Lowest load point is the lowest continuous duty operating load allowed. No overload permitted at rating shown.

For notes information consult page three.

*****WARNINGS ISSUED FOR THIS RATING CONSULT PAGE 3*****

WARNING(S):

1. Site fuel lower heating value is above the 1050 Btu/scf limit for the standard engine fuel system. Modifications may be required to the carburetor, fuel regulator, or both. Consult your Caterpillar contact for further details.

RECOMMENDED ACTION

For additional information please contact your Caterpillar engine dealer.

PREPARED BY: Kevin Orchard, Exterran
Data generated by Gas Engine Rating Pro Version 4.01.00
Ref. Data Set DM5155-07-001, 4EK, Printed 16Mar2012

Engine Power vs. Inlet Air Temperature

Data represents temperature sweep at 6435 ft and 1400 rpm

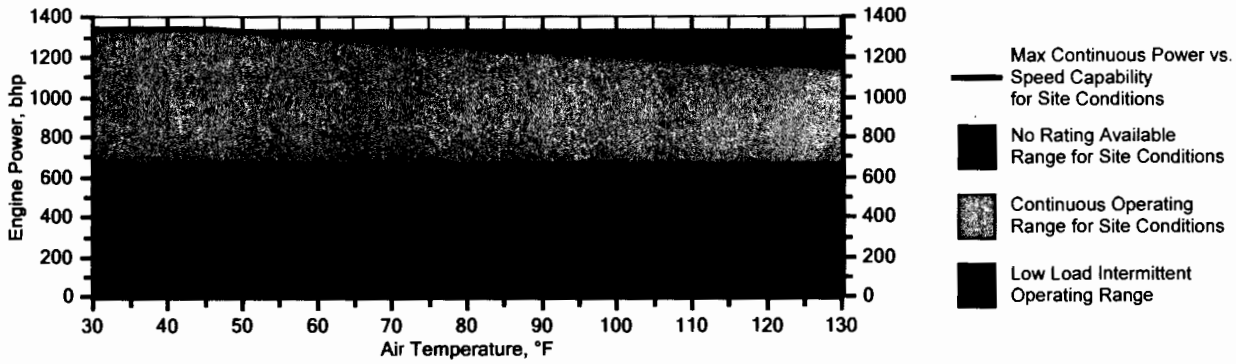

Engine Power vs. Engine Speed

Data represents speed sweep at 6435 ft and 100 °F

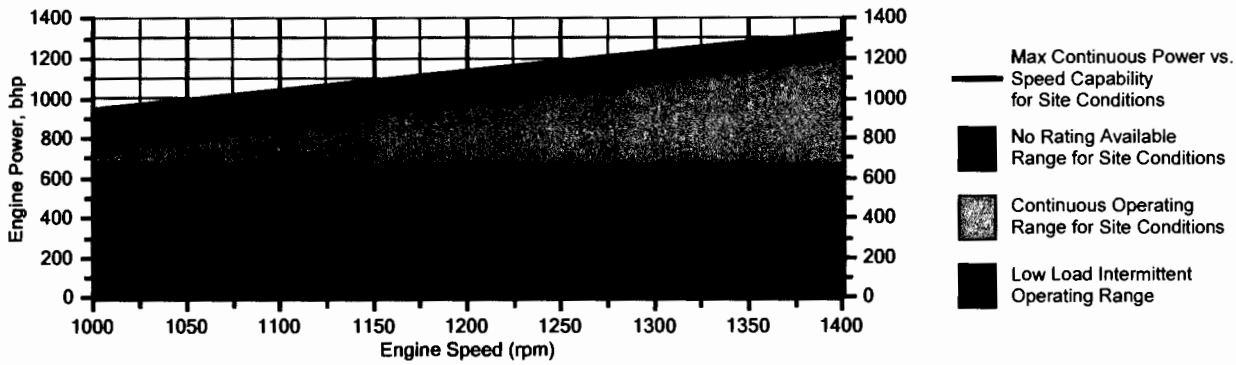

Engine Torque vs. Engine Speed

Data represents speed sweep at 6435 ft and 100 °F

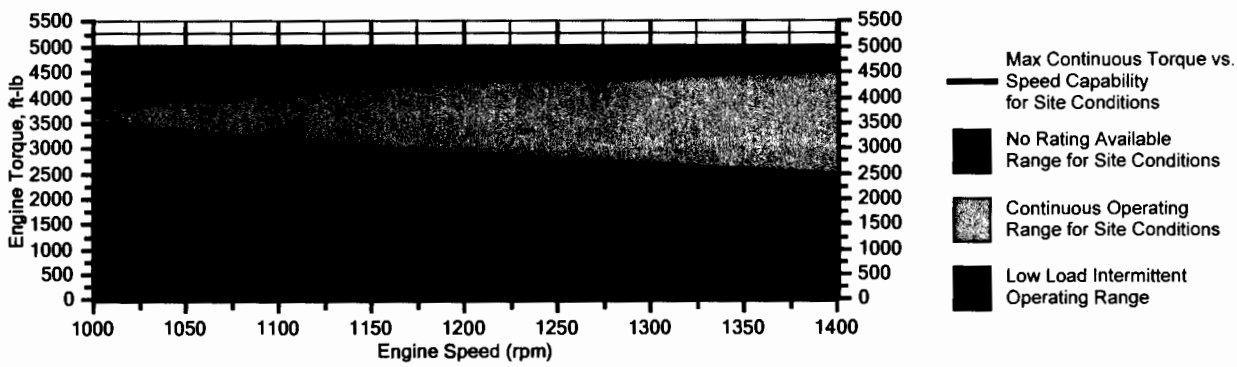

Note: At site conditions of 6435 ft and 100°F inlet air temp., constant torque can be maintained down to 1400 rpm. The minimum speed for loading at these conditions is 1000 rpm.

NOTES

1. Engine rating is with two engine driven water pumps. Tolerance is ± 3% of full load.

2. Fuel consumption tolerance is ± 3.0% of full load data.

3. Air flow value is on a 'wet' basis. Flow is a nominal value with a tolerance of ± 5 %.

4. Inlet and Exhaust Restrictions must not exceed A&I limits based on full load flow rates from the standard technical data sheet.

5. Inlet manifold pressure is a nominal value with a tolerance of ± 5 %.

6. Exhaust temperature is a nominal value with a tolerance of (+)63°F, (-)54°F.

7. Exhaust flow value is on a "wet" basis. Flow is a nominal value with a tolerance of ± 6 %.

8. Emissions data is at engine exhaust flange prior to any after treatment.

9. Emission values are based on engine operating at steady state conditions, adjusted to the specified NOx level at 100% load. Fuel methane number cannot vary more than ± 3. NOx tolerances are ± +111 %, -96 % of specified value. All other emission values listed are higher than nominal levels to allow for instrumentation, measurement, and engine-to-engine variations. They indicate "Not to Exceed" values. THC, NMHC, and NMNEHC do not include aldehydes.

10. VOCs - Volatile organic compounds as defined in US EPA 40 CFR 60, subpart JJJJ

11. Exhaust Oxygen level is the result of adjusting the engine to operate at the specified NOx level. Tolerance is ± 0.5.

12. Heat rejection values are nominal. Tolerances, based on treated water, are ± 10% for jacket water circuit, ± 50% for radiation, ± 20% for lube oil circuit, and ± 5% for aftercooler circuit.

13. Aftercooler heat rejection includes an aftercooler heat rejection factor for the site elevation and inlet air temperature specified. Aftercooler heat rejection values at part load are for reference only. Do not use part load data for heat exchanger sizing.

14. Cooling system sizing criteria are maximum circuit heat rejection for the site, with applied tolerances.

WARNING(S):
1. Site fuel lower heating value is above the 1050 Btu/scf limit for the standard engine fuel system. Modifications may be required to the carburetor, fuel regulator, or both. Consult your Caterpillar contact for further details.

RECOMMENDED ACTION
For additional information please contact your Caterpillar engine dealer.

Constituent	Abbrev	Mole %	Norm
Water Vapor	H2O	0.0000	0.0000
Methane	CH4	85.9398	85.9875
Ethane	C2H6	7.2644	7.2684
Propane	C3H8	3.1859	3.1877
Isobutane	iso-C4H1O	0.4679	0.4682
Norbutane	nor-C4H1O	0.8990	0.8995
Isopentane	iso-C5H12	0.2818	0.2820
Norpentane	nor-C5H12	0.3512	0.3514
Hexane	C6H14	0.4077	0.4079
Heptane	C7H16	0.1594	0.1595
Nitrogen	N2	0.3155	0.3157
Carbon Dioxide	CO2	0.6542	0.6546
Hydrogen Sulfide	H2S	0.0000	0.0000
Carbon Monoxide	CO	0.0000	0.0000
Hydrogen	H2	0.0000	0.0000
Oxygen	O2	0.0000	0.0000
Helium	HE	0.0000	0.0000
Neopentane	neo-C5H12	0.0000	0.0000
Octane	C8H18	0.0177	0.0177
Nonane	C9H20	0.0000	0.0000
Ethylene	C2H4	0.0000	0.0000
Propylene	C3H6	0.0000	0.0000
TOTAL (Volume %)		99.9445	100.0001

Fuel Makeup:	Gas Analysis
Unit of Measure:	English

Calculated Fuel Properties

Caterpillar Methane Number:	52.4
Lower Heating Value (Btu/scf):	1068
Higher Heating Value (Btu/scf):	1180
WOBBE Index (Btu/scf):	1300
THC: Free Inert Ratio:	102.06
Total % Inerts (% N2, CO2, He):	0.97%
RPC (%) (To 905 Btu/scf Fuel):	100%
Compressibility Factor:	0.997
Stoich A/F Ratio (Vol/Vol):	11.11
Stoich A/F Ratio (Mass/Mass):	16.46
Specific Gravity (Relative to Air):	0.675
Specific Heat Constant (K):	1.294

CONDITIONS AND DEFINITIONS

Caterpillar Methane Number represents the knock resistance of a gaseous fuel. It should be used with the Caterpillar Fuel Usage Guide for the engine and rating to determine the rating for the fuel specified. A Fuel Usage Guide for each rating is included on page 2 of its standard technical data sheet.

RPC always applies to naturally aspirated (NA) engines, and turbocharged (TA or LE) engines only when they are derated for altitude and ambient site conditions.

Project specific technical data sheets generated by the Caterpillar Gas Engine Rating Pro program take the Caterpillar Methane Number and RPC into account when generating a site rating.

Fuel properties for Btu/scf calculations are at 60F and 14.696 psia.

Caterpillar shall have no liability in law or equity, for damages, consequently or otherwise, arising from use of program and related material or any part thereof.

FUEL LIQUIDS

Field gases, well head gases, and associated gases typically contain liquid water and heavy hydrocarbons entrained in the gas. To prevent detonation and severe damage to the engine, hydrocarbon liquids must not be allowed to enter the engine fuel system. To remove liquids, a liquid separator and coalescing filter are recommended, with an automatic drain and collection tank to prevent contamination of the ground in accordance with local codes and standards.

To avoid water condensation in the engine or fuel lines, limit the relative humidity of water in the fuel to 80% at the minimum fuel operating temperature.

WARNING(S)

1. Site fuel lower heating value is above the 1050 Btu/scf limit for the standard engine fuel system. Modifications may be required to the carburetor, fuel regulator, or both. Consult your Caterpillar contact for further details.

RECOMMENDED ACTION

For additional information please contact your Caterpillar engine dealer.

Company:	Berry Petroleum
Subject:	Section 23 Compressor Station
Engine:	Caterpillar Model G3516 4 stroke low emission NG-fired engines (3713)

Engine bhp (site rating):	1,209
Engine BSFC (Btu/hp-hr):	8,650
Heat Input Capacity (MMBtu/hr):	10.5
Fuel LHV (Btu/scf,Btu/gal):	1,060
Fuel (MMscf/yr,gal/yr):	86.4
Hours/year:	8,760

	Emission Factor[a]	Estimated Individual Unit Emissions[b]	
	Uncontrolled Basis	Uncontrolled	Uncontrolled
Pollutant	lb/MMBtu	lb/hr	tpy
CRITERIA			
NOx (100% load)	1.5 g/bhp-hr	4.00	17.5
CO (100% load)	2.95 g/bhp-hr	7.86	34.4
SO_2	5.88E-04	0.01	0.03
VOC	0.45 g/bhp-hr	1.20	5.3
PM10	7.71E-05	8.06E-04	3.53E-03
PM2.5	7.71E-05	8.06E-04	3.53E-03
GHGs			
CO_2	553 g/bhp-hr	1,474	6,455.98
CH_4	1.88 g/bhp-hr	5.01	21.95
N2O	2.34E-04	2.44E-03	0.01
CO2e			7,008
HAPs			
1,3-Butadiene	2.67E-04	2.79E-03	0.01
2,2,4-Trimethylpentane	2.50E-04	2.61E-03	0.01
Acetaldehyde	8.36E-03	8.74E-02	0.38
Acrolein	5.14E-03	5.38E-02	0.24
Benzene	4.40E-04	4.60E-03	0.02
Biphenyl	2.12E-04	2.22E-03	0.01
Formaldehyde	0.30 g/bhp-hr	8.00E-01	3.50
Methanol	2.50E-03	2.61E-02	0.11
n-Hexane	1.11E-03	1.16E-02	0.05
Naphthalene	7.44E-05	7.78E-04	0.00
Toluene	4.08E-04	4.27E-03	0.02
Xylene	1.84E-04	1.92E-03	0.01
		Total HAP	4.37

Notes: (a) Emission factors based on AP-42, Table 3.2-2 for 4-stroke lean burn engines (7/00), unless otherwise noted

'g/bhp-hr' factors provided by vendor

Assumed SO2 content of 2000 gr/MMscf

N2O emission factor based on 2009 API GHG Compendium, Table 4-5

(b) Annual Emission Rate for non-criteria pollutants

(lbs/yr) = (Emission Factor, lb/MMBtu) * (Engine bhp) * (Engine BSFC (Btu/hp-hr) / 1,000,000* (8760 hrs/year)

G3516

NON-CURRENT

GAS COMPRESSION APPLICATION

GAS ENGINE SITE SPECIFIC TECHNICAL DATA

CATERPILLAR®

Berry- Section 23 Unit 3713

ENGINE SPEED (rpm):	1400	FUEL SYSTEM:	HPG IMPCO WITH AIR FUEL RATIO CONTROL
COMPRESSION RATIO:	8:1		
AFTERCOOLER WATER INLET (°F):	130	**SITE CONDITIONS:**	
JACKET WATER OUTLET (°F):	210	FUEL:	Berry-Section 23
ASPIRATION:	TA	FUEL PRESSURE RANGE(psig):	35.0-40.0
COOLING SYSTEM:	JW+OC, AC	FUEL METHANE NUMBER:	56.2
IGNITION SYSTEM:	ADEM3	FUEL LHV (Btu/scf):	1060
EXHAUST MANIFOLD:	ASWC	ALTITUDE(ft):	6435
COMBUSTION:	Low Emission	MAXIMUM INLET AIR TEMPERATURE(°F):	100
NOx EMISSION LEVEL (g/bhp-hr NOx):	1.5	STANDARD RATED POWER:	1340 bhp@1400rpm
SET POINT TIMING:	26		

				MAXIMUM RATING	SITE RATING AT MAXIMUM INLET AIR TEMPERATURE		
RATING		**NOTES**	**LOAD**	**100%**	**100%**	**75%**	**55%**
ENGINE POWER	(WITHOUT FAN)	(1)	bhp	1340	1209	906	670
INLET AIR TEMPERATURE			°F	46	100	100	100
ENGINE DATA							
FUEL CONSUMPTION (LHV)		(2)	Btu/bhp-hr	7729	7832	8143	8487
FUEL CONSUMPTION (HHV)		(2)	Btu/bhp-hr	8536	8650	8993	9373
AIR FLOW (77°F, 14.7 psia)	(WET)	(3)(4)	scfm	2910	2651	2009	1425
AIR FLOW	(WET)	(3)(4)	lb/hr	12902	11755	8909	6317
INLET MANIFOLD PRESSURE		(5)	in Hg(abs)	68.9	63.2	49.7	38.5
EXHAUST TEMPERATURE - ENGINE OUTLET		(6)	°F	912	906	897	899
EXHAUST GAS FLOW (@engine outlet temp, 14.5 psia)	(WET)	(7)(4)	ft3/min	8021	7278	5490	3918
EXHAUST GAS MASS FLOW	(WET)	(7)(4)	lb/hr	13399	12209	9263	6590
EMISSIONS DATA - ENGINE OUT							
NOx (as NO2)		(8)(9)	g/bhp-hr	1.50	1.50	1.50	1.50
CO		(8)(9)	g/bhp-hr	2.91	2.95	3.01	2.92
THC (mol. wt. of 15.84)		(8)(9)	g/bhp-hr	2.55	2.65	2.90	3.00
NMHC (mol. wt. of 15.84)		(8)(9)	g/bhp-hr	0.74	0.77	0.84	0.87
NMNEHC (VOCs) (mol. wt. of 15.84)		(8)(9)(10)	g/bhp-hr	0.43	0.45	0.49	0.51
HCHO (Formaldehyde)		(8)(9)	g/bhp-hr	0.29	0.30	0.33	0.35
CO2		(8)(9)	g/bhp-hr	547	553	579	600
EXHAUST OXYGEN		(8)(11)	% DRY	7.9	7.8	7.6	7.4
HEAT REJECTION							
HEAT REJ. TO JACKET WATER (JW)		(12)	Btu/min	42230	39928	34586	30475
HEAT REJ. TO ATMOSPHERE		(12)	Btu/min	5313	4967	4168	3543
HEAT REJ. TO LUBE OIL (OC)		(12)	Btu/min	6298	5955	5158	4545
HEAT REJ. TO AFTERCOOLER (AC)		(12)(13)	Btu/min	14609	14609	7619	3411

COOLING SYSTEM SIZING CRITERIA			
TOTAL JACKET WATER CIRCUIT (JW+OC)	(14)	Btu/min	54010
TOTAL AFTERCOOLER CIRCUIT (AC)	(13)(14)	Btu/min	15339
A cooling system safety factor of 0% has been added to the cooling system sizing criteria.			

CONDITIONS AND DEFINITIONS

Engine rating obtained and presented in accordance with ISO 3046/1, adjusted for fuel, site altitude and site inlet air temperature. 100% rating at maximum inlet air temperature is the maximum engine capability for the specified fuel at site altitude and maximum site inlet air temperature. Max. rating is the maximum capability for the specified fuel at site altitude and reduced inlet air temperature. Lowest load point is the lowest continuous duty operating load allowed. No overload permitted at rating shown.

For notes information consult page three.

*****WARNINGS ISSUED FOR THIS RATING CONSULT PAGE 3*****

WARNING(S):

1. The lower heating value of the fuel is higher than or equal to 1050 Btu/scf and lower than 1250 Btu/scf. May require up to two 7E-1569 valve washers in the carburetor to lean out the part load operating points. The lower heating value of the fuel is higher than the known capabilities of the air fuel ratio control. To achieve part load NOx emissions, manual adjustment of the carburator and air fuel ratio control settings will be required.

Engine Power vs. Inlet Air Temperature

Data represents temperature sweep at 6435 ft and 1400 rpm

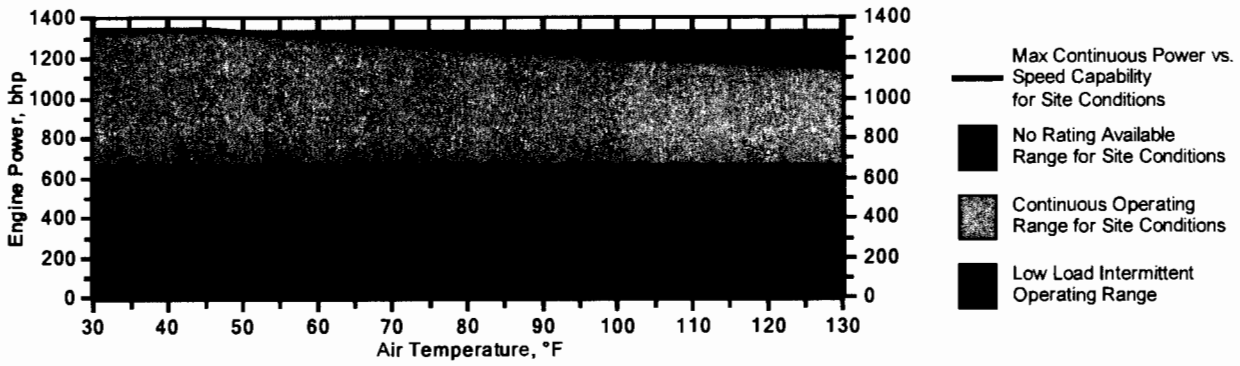

Engine Power vs. Engine Speed

Data represents speed sweep at 6435 ft and 100 °F

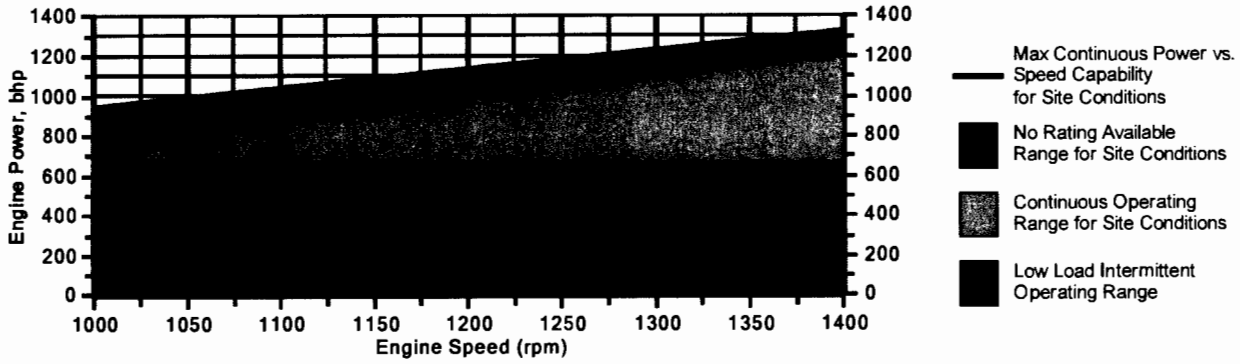

Engine Torque vs. Engine Speed

Data represents speed sweep at 6435 ft and 100 °F

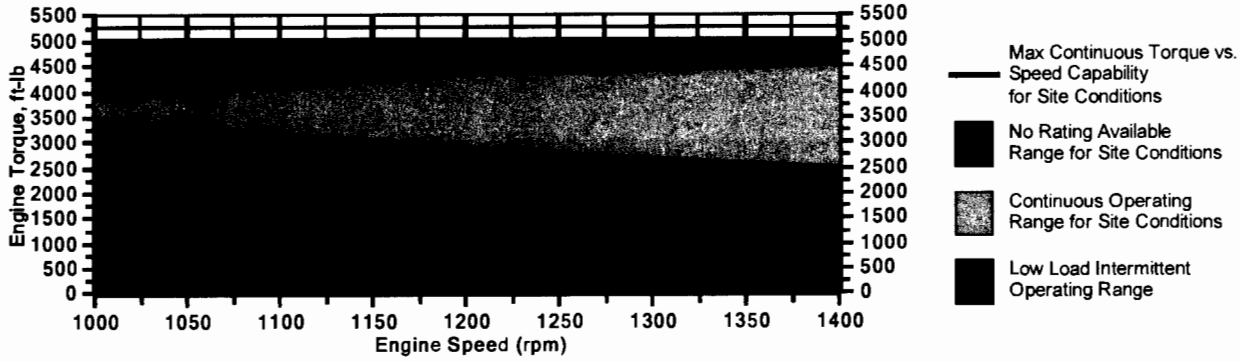

Note: At site conditions of 6435 ft and 100°F inlet air temp., constant torque can be maintained down to 1400 rpm. The minimum speed for loading at these conditions is 1000 rpm.

NOTES

1. Engine rating is with two engine driven water pumps. Tolerance is ± 3% of full load.

2. Fuel consumption tolerance is ± 3.0% of full load data.

3. Air flow value is on a 'wet' basis. Flow is a nominal value with a tolerance of ± 5 %.

4. Inlet and Exhaust Restrictions must not exceed A&I limits based on full load flow rates from the standard technical data sheet.

5. Inlet manifold pressure is a nominal value with a tolerance of ± 5 %.

6. Exhaust temperature is a nominal value with a tolerance of (+)63°F, (-)54°F.

7. Exhaust flow value is on a "wet" basis. Flow is a nominal value with a tolerance of ± 6 %.

8. Emissions data is at engine exhaust flange prior to any after treatment.

9. Emission values are based on engine operating at steady state conditions, adjusted to the specified NOx level at 100% load. Fuel methane number cannot vary more than ± 3. NOx tolerances are ± +111 %, -96 % of specified value. All other emission values listed are higher than nominal levels to allow for instrumentation, measurement, and engine-to-engine variations. They indicate "Not to Exceed" values. THC, NMHC, and NMNEHC do not include aldehydes.

10. VOCs - Volatile organic compounds as defined in US EPA 40 CFR 60, subpart JJJJ

11. Exhaust Oxygen level is the result of adjusting the engine to operate at the specified NOx level. Tolerance is ± 0.5.

12. Heat rejection values are nominal. Tolerances, based on treated water, are ± 10% for jacket water circuit, ± 50% for radiation, ± 20% for lube oil circuit, and ± 5% for aftercooler circuit.

13. Aftercooler heat rejection includes an aftercooler heat rejection factor for the site elevation and inlet air temperature specified. Aftercooler heat rejection values at part load are for reference only. Do not use part load data for heat exchanger sizing.

14. Cooling system sizing criteria are maximum circuit heat rejection for the site, with applied tolerances.

WARNING(S):
1. The lower heating value of the fuel is higher than or equal to 1050 Btu/scf and lower than 1250 Btu/scf. May require up to two 7E-1569 valve washers in the carburetor to lean out the part load operating points. The lower heating value of the fuel is higher than the known capabilities of the air fuel ratio control. To achieve part load NOx emissions, manual adjustment of the carburator and air fuel ratio control settings will be required.

Constituent	Abbrev	Mole %	Norm
Water Vapor	H2O	0.0000	0.0000
Methane	CH4	85.9328	86.2004
Ethane	C2H6	7.2644	7.2870
Propane	C3H8	3.1859	3.1958
Isobutane	iso-C4H1O	0.4679	0.4694
Norbutane	nor-C4H1O	0.8990	0.9018
Isopentane	iso-C5H12	0.2818	0.2827
Norpentane	nor-C5H12	0.3512	0.3523
Hexane	C6H14	0.1775	0.1781
Heptane	C7H16	0.1594	0.1599
Nitrogen	N2	0.3155	0.3165
Carbon Dioxide	CO2	0.6542	0.6562
Hydrogen Sulfide	H2S	0.0000	0.0000
Carbon Monoxide	CO	0.0000	0.0000
Hydrogen	H2	0.0000	0.0000
Oxygen	O2	0.0000	0.0000
Helium	HE	0.0000	0.0000
Neopentane	neo-C5H12	0.0000	0.0000
Octane	C8H18	0.0000	0.0000
Nonane	C9H20	0.0000	0.0000
Ethylene	C2H4	0.0000	0.0000
Propylene	C3H6	0.0000	0.0000
TOTAL (Volume %)		99.6896	100.0001

Fuel Makeup:	Berry-Section 23
Unit of Measure:	English

Calculated Fuel Properties

Caterpillar Methane Number:	56.2
Lower Heating Value (Btu/scf):	1060
Higher Heating Value (Btu/scf):	1171
WOBBE Index (Btu/scf):	1296
THC: Free Inert Ratio:	101.81
Total % Inerts (% N2, CO2, He):	0.97%
RPC (%) (To 905 Btu/scf Fuel):	100%
Compressibility Factor:	0.997
Stoich A/F Ratio (Vol/Vol):	11.02
Stoich A/F Ratio (Mass/Mass):	16.47
Specific Gravity (Relative to Air):	0.669
Specific Heat Constant (K):	1.294

CONDITIONS AND DEFINITIONS

Caterpillar Methane Number represents the knock resistance of a gaseous fuel. It should be used with the Caterpillar Fuel Usage Guide for the engine and rating to determine the rating for the fuel specified. A Fuel Usage Guide for each rating is included on page 2 of its standard technical data sheet.

RPC always applies to naturally aspirated (NA) engines, and turbocharged (TA or LE) engines only when they are derated for altitude and ambient site conditions.

Project specific technical data sheets generated by the Caterpillar Gas Engine Rating Pro program take the Caterpillar Methane Number and RPC into account when generating a site rating.

Fuel properties for Btu/scf calculations are at 60F and 14.696 psia.

Caterpillar shall have no liability in law or equity, for damages, consequently or otherwise, arising from use of program and related material or any part thereof.

FUEL LIQUIDS

Field gases, well head gases, and associated gases typically contain liquid water and heavy hydrocarbons entrained in the gas. To prevent detonation and severe damage to the engine, hydrocarbon liquids must not be allowed to enter the engine fuel system. To remove liquids, a liquid separator and coalescing filter are recommended, with an automatic drain and collection tank to prevent contamination of the ground in accordance with local codes and standards.

To avoid water condensation in the engine or fuel lines, limit the relative humidity of water in the fuel to 80% at the minimum fuel operating temperature.

WARNING(S)

1. The lower heating value of the fuel is higher than or equal to 1050 Btu/scf and lower than 1250 Btu/scf. May require up to two 7E-1569 valve washers in the carburetor to lean out the part load operating points. The lower heating value of the fuel is higher than the known capabilities of the air fuel ratio control. To achieve part load NOx emissions, manual adjustment of the carburator and air fuel ratio control settings will be required.

Company:	Berry Petroleum
Subject:	Section 23 Compressor Station
Engine:	Caterpillar Olympian Genset 4SRB

Engine bhp (site rating):	72
Heat Input Capacity (MMBtu/hr):	0.6
Fuel LHV (Btu/scf,Btu/gal):	1,068
Fuel (MMscf/yr,gal/yr):	4.7
Hours/year:	8,760

	Emission Factor[a]	Estimated Individual Unit Emissions[b]	
	Uncontrolled Basis	Uncontrolled	Uncontrolled
Pollutant	lb/MMBtu	lb/hr	tpy
CRITERIA			
NOx (100% load)	2.21	1.27	5.6
CO (100% load)	3.72	2.14	9.4
SO_2	5.88E-04	3.38E-04	1.48E-03
VOC	0.03	0.02	0.1
PM10	7.71E-05	4.43E-05	1.94E-04
PM2.5	7.71E-05	4.43E-05	1.94E-04
GHGs			
CO_2	110	63	276.74
CH_4	0.23	0.13	0.58
CO2e			291
HAPs			
1,1,2,2-Tetrachloroethane	2.53E-05	1.45E-05	6.37E-05
1,1,2-Trichloroethane	1.53E-05	8.79E-06	3.85E-05
1.3-Butadiene	6.63E-04	3.81E-04	1.67E-03
1,3-Dichloropropene	1.27E-05	7.29E-06	3.20E-05
Acetaldehyde	2.79E-03	1.60E-03	7.02E-03
Acrolein	2.63E-03	1.51E-03	6.62E-03
Benzene	1.58E-03	9.08E-04	3.98E-03
Carbon Tetrachloride	1.77E-05	1.02E-05	4.45E-05
Chlorobenzene	1.29E-05	7.41E-06	3.25E-05
Chloroform	1.37E-05	7.87E-06	3.45E-05
Ethylbenzene	2.48E-05	1.42E-05	6.24E-05
Formaldehyde	2.05E-02	1.18E-02	5.16E-02
Methanol	3.06E-03	1.76E-03	7.70E-03
Methylene Chloride	4.12E-05	2.37E-05	1.04E-04
Naphthalene	9.71E-05	5.58E-05	2.44E-04
PAH	1.41E-04	8.10E-05	3.55E-04
Styrene	1.19E-05	6.84E-06	2.99E-05
Toluene	5.58E-04	3.21E-04	1.40E-03
Vinyl Chloride	7.18E-06	4.12E-06	1.81E-05
Xylene	1.95E-04	1.12E-04	4.91E-04
		Total HAP	0.08

Notes: (a) Emission factors based on AP-42, Table 3.2-3 for 4-stroke rich burn engines (7/00), Assumed SO2 content of 2000 gr/MMscf

(b) Annual Emission Rate for non-criteria pollutants (lbs/yr) = (Emission Factor, lb/MMBtu) * (Engine bhp) * (Engine BSFC (Btu/hp-hr) / 1,000,000* (8760 hrs/year)

Company:	Berry Petroleum
Subject:	Section 23 Compressor Station
Engine:	AJAX E-42 Pump Jack Engine 4SLB

Engine bhp (site rating):	40
Engine BSFC (Btu/hp-hr):	9,900
Heat Input Capacity (MMBtu/hr):	0.4
Fuel LHV (Btu/scf,Btu/gal):	1,060
Fuel (MMscf/yr,gal/yr):	3.3
Hours/year:	8,760

	Emission Factor[a]	Estimated Individual Unit Emissions[b]	
	Uncontrolled Basis	Uncontrolled	Uncontrolled
Pollutant	lb/MMBtu	lb/hr	tpy
CRITERIA			
NOx (100% load)	4.4 g/bhp-hr	0.39	1.7
CO (100% load)	3.30 g/bhp-hr	0.29	1.3
SO_2	5.88E-04	2.33E-04	1.02E-03
VOC	0.50 g/bhp-hr	0.04	0.2
PM10	7.71E-05	3.05E-05	1.34E-04
PM2.5	7.71E-05	3.05E-05	1.34E-04
GHGs			
CO_2	580 g/bhp-hr	51	224.03
CH_4	1.45	5.74E-01	2.51
CO2e			287
HAPs			
1,3-Butadiene	2.67E-04	1.06E-04	4.63E-04
2,2,4-Trimethylpentane	2.50E-04	9.90E-05	4.34E-04
Acetaldehyde	8.36E-03	3.31E-03	1.45E-02
Acrolein	5.14E-03	2.04E-03	8.92E-03
Benzene	4.40E-04	1.74E-04	7.63E-04
Biphenyl	2.12E-04	8.40E-05	3.68E-04
Formaldehyde	0.30 g/bhp-hr	2.65E-02	1.16E-01
Methanol	2.50E-03	9.90E-04	4.34E-03
n-Hexane	1.11E-03	4.40E-04	1.93E-03
Naphthalene	7.44E-05	2.95E-05	1.29E-04
Toluene	4.08E-04	1.62E-04	7.08E-04
Xylene	1.84E-04	7.29E-05	3.19E-04
		Total HAP	0.15

Notes: (a) Emission factors based on AP-42, Table 3.2-2 for 4-stroke lean burn engines (7/00), unless otherwise noted

'g/bhp-hr' factors provided by vendor

Assumed SO2 content of 2000 gr/MMscf

(b) Annual Emission Rate for non-criteria pollutants

(lbs/yr) = (Emission Factor, lb/MMBtu) * (Engine bhp) * (Engine BSFC (Btu/hp-hr) / 1,000,000* (8760 hrs/year)

Company: Berry Petroleum
Subject: Section 23 Compressor Station
Two 400 bbl **Crude Oil** Storage Tanks
Source: Flashing, Working and Breathing Losses

Throughput (bbl/d):	10
Throughput (gal/yr):	153,300
Hours/year:	8,760

Pollutant	Emission Factor[a]	Estimated Emissions[b]	
	Uncontrolled Basis	Uncontrolled	Uncontrolled
	(lb/bbl)	lb/hr	tpy
CRITERIA & GHGs			
VOCs	7.88E-01	3.28E-01	1.44
CO2	8.86E-03	3.69E-03	0.02
CH4	5.07E-02	2.11E-02	0.09
CO2e			2.33
HAPs			
Benzene	1.58E-02	6.56E-03	2.87E-02
2,2,4-Trimethylpentane	4.15E-03	1.73E-03	7.58E-03
Toluene	1.47E-02	6.13E-03	2.69E-02
ethylbenzene	2.60E-03	1.08E-03	4.75E-03
xylenes	5.74E-03	2.39E-03	1.05E-02
n-hexane	1.26E-01	5.24E-02	2.30E-01
		Total HAP	**3.1E-01**

Notes: (a) Emission factors based on ProMax® V3.2 Analyses
Representative emissions factors were developed from 12 individual site analyses across the field
Emission factor includes both flashing and working and breathing losses
(b) Estimated emissions
lb/hr = Emission Factor lb/bbl * 16 bbl/day / 24 hr/d
tpy = lb/hr * 8760 hr/yr / 2000 lb/ton
Controlled CH4 and VOC is assumed to convert to CO2; ratio of 3.143:1 and 1:1 lb, respectively

Company:	Berry Petroleum
Subject:	Section 23 Compressor Station
Source:	**Crude Oil** Truck Loading Losses

Throughput (bbl/d):	10
Throughput (gal/yr):	153,300
Hours/year:	8,760

Pollutant	Emission Factor[(a)]	Estimated Emissions	
	Uncontrolled Basis	Uncontrolled	Uncontrolled
	(lb/bbl)	lb/hr	tpy
CRITERIA & GHGs			
VOCs	1.13E-01	4.69E-02	2.06E-01
CO2	1.68E-03	6.98E-04	3.06E-03
CH4	9.59E-03	4.00E-03	1.75E-02
CO2e			4.41E-01
HAPs			
Benzene	2.54E-03	1.06E-03	4.64E-03
2,2,4-Trimethylpentane	7.41E-04	3.09E-04	1.35E-03
Toluene	1.96E-03	8.19E-04	3.59E-03
ethylbenzene	3.08E-04	1.28E-04	5.62E-04
xylenes	6.10E-04	2.54E-04	1.11E-03
n-hexane	1.62E-02	6.76E-03	2.96E-02
		Total HAP	**0.04**

Notes: (a) Emission factors based on ProMax® V3.2

Representative emissions factors were developed from 12 individual site analyses across the field

(b) Estimated emissions

lb/hr = Emission Factor lb/bbl * bbl/day / 24 hr/d

tpy = lb/hr * 8760 hr/yr / 2000 lb/ton

Company:	Berry Petroleum
Subject:	Section 23 Compressor Station
Source:	TEG Dehydration Unit Reboiler

Rating (MMBtu/hr):	0.25
Fuel HHV (Btu/scf):	1,160
Hours/year:	8,760

Pollutant	Emission Factor[a]	Estimated Emissions	
	Uncontrolled Basis	Uncontrolled	Uncontrolled
	lb/MMscf	lb/hr	tpy
CRITERIA			
NOx	100	0.022	0.09
CO	84	0.018	0.08
VOC	5.5	0.001	0.01
SO2	0.60	0.000	0.001
PM	7.60	0.002	0.01
GHGs			
CO2	120000	26	113.3
CH4	2.30	0.000	0.002
CO2e			1.13E+02
HAP			
Formaldehyde	0.075	1.62E-05	7.08E-05

Notes: (a) Emission factors from AP-42 1.4 (Small Boilers < 100 MMBtu/hr)

(b) Estimated emissions

lb/hr = Emission Factor lb/MMscf * Rating MMBtu/hr / HHV Btu/scf

tpy = lb/hr * 8760 hr/yr / 2000 lb/ton

Company: Berry Petroleum
Subject: Section 23 Compressor Station
Source: Messco VOCinerator

Emission Source:	TEG Still Vent	
Source Type:	VOCinerator	
Flowrate (MMscf/hr)[a]:	0.000266011	
Waste Gas HHV (Btu/scf):	400	
Operating Hours per Year:	8760	
Emission Factors from Natural Gas Combustion:		
NOx (lb/MMscf):	100	AP42 Tbl 1.4-1
CO (lb/MMscf):	84	AP42 Tbl 1.4-1

Compound	Emission Factor	Units	PTE[b,c]	
			Hourly	Annual
			(lb/hr)	(tpy)
NOx	100	lb/MMscf	0.010	0.05
CO	84	lb/MMscf	0.009	0.04

Notes:

(a) Waste gas flowrate and HHV based on ProMax V3.2

(b) PTE (lb/hr) = (Flowrate, MMscf/hr) * (Emission Factor, lb/MMscf)

Annual PTE Emission Rate (tpy) = (Hourly Emission Rate, lb/hr) * (Hour of Operation Per Year, hr/yr) / (2,000 lbs/ton)

(c) VOC emissions have been omitted as these are included on the source (Dehy) calculations

Company: Berry Petroleum
Subject: Section 23 Compressor Station
Engine: Compressor Blowdowns

Assumptions

Blowdown Volume	15,000	(scf/blowdown)
Gas MW	20.30	(lb/mol)
Gas Molar Volume	378	(scf/mol @ STP - 20 °C and 101.325 kPa)
Blowdown Frequency	12	(Blowdowns per compresor)
Blowdown Duration	10	(minutes per blowdown)
No. Compressors	2	

	Component wt Fraction	Emissions (lb/blowdown)	Emissions (lb/yr)	Emissions (tpy)
CO2	0.90%	14.50	348.0	0.17
CH4	64.5%	1,038.66	24,927.9	12.5
CO2e		25,981	623,544	311.77
VOC	21.59%	347.86	8,348.6	4.174
Benzene	0.06%	0.98	23.5	0.012
n-Hexane	0.75%	12.06	289.4	0.145
Toluene	0.07%	1.10	26.3	0.013
Ethylbenzene	0.009%	0.15	3.6	0.002
Xylene	0.033%	0.53	12.6	0.006

Notes: **Component wt fractions taken from wet gas inlet stream of GlyCalc report**
Emissions (lb/blowdown) = Volume (scf/blowdown) / Gas mol Vol scf/mol * Gas MW g/mol * wt% * No. Compressors
Emissions (lb/yr) = lb/blowdown * frequency blowdowns/yr
Emissions (tpy) = lb/yr / 2000 lb/ton

Company:	Berry Petroleum
Subject:	Section 23 Compressor Station
Engine:	Compressor Rod Packing

Rod Packing Emissions

Assumptions	
Vent Volume, scfh	60
Engines	2
Gas MW, lb/lbmole	20.30

	Component wt Fraction	Emissions (lb/hr)	Emissions (lb/yr)	Emissions (tpy)
CO2	0.90%	0.06	508.1	0.25
CH4	64.47%	4.15	36,394.7	18.2
CO2e		103.92	910,375	455.19
VOC	21.59%	1.39	12,189.0	6.09
Benzene	0.06%	0.004	34.3	0.02
n-Hexane	0.75%	0.05	422.6	0.21
Toluene	0.07%	0.004	38.4	0.02
Ethylbenzene	0.009%	0.0006	5.3	0.003
Xylene	0.03%	0.002	18.4	0.009

Notes:

Vent volume based on Canadian/GRI research reports

Component wt fractions taken from wet gas inlet stream of GlyCalc report

Emissions (lb/hr) = Volume (scf/hr) / 378 scf/mol * Gas MW g/mol * wt% * No. Compressors

Emissions (lb/yr) = lb/hr * 8760 hr/yr

Emissions (tpy) = lb/yr / 2000 lb/ton

Starter Emissions

Assumptions	
Starter Gas Usage, scf/start	550
Events/yr	52
Engines	2
VOC MW, lb/lbmole	20.30

	Component wt Fraction	Emissions (lb/start)	Emissions (lb/yr)	Emissions (tpy)
CO2	0.90%	0.53	27.6	0.01
CH4	64.47%	38.08	1,980.4	1.0
CO2e		876	45,576	22.79
VOC	21.59%	12.75	663.2	0.33
Benzene	0.06%	0.04	1.9	0.001
n-Hexane	0.75%	0.44	23.0	0.01
Toluene	0.07%	0.04	2.1	0.001
Ethylbenzene	0.01%	0.01	0.3	0.0001
Xylene	0.03%	0.02	1.0	0.0005

Notes:

Starter gas usage based on assumed 30 second startup

Component wt fractions taken from wet gas inlet stream of GlyCalc report

Emissions (lb/start) = Volume (scf/start) / 378 scf/mol * Gas MW g/mol * wt% * No. Compressors

Emissions (lb/yr) = lb/hr * starts/yr

Emissions (tpy) = lb/yr / 2000 lb/ton

Company: Berry Petroleum
Subject: Section 23 Compressor Station
Source: Fugitive Emissions

	Component					
	Valves	Connectors	Flanges	Other	Open End	Pump Seals
	Gas Service					
Count	230	625	313	15	0	0
Emission Factor lb TOC/component-hr	0.00992	0.00044	0.00086	0.0194	0.00441	0.00529
lb TOC/hr	2.28	0.28	0.27	0.29	0	0
	Light Oil Service					
Count	80	210	105	5	4	3
Emission Factor lb TOC/component-hr	0.00551	0.00046	0.00024	0.01653	0.00309	0.02866
lb TOC/hr	0.44	0.10	0.03	0.08	0.01	0.09

	Gas Service		
	Component wt Frac TOC	Emissions lb/hr	Emissions tpy
CO2	0.90%	0.028	0.1229
CH4	64.5%	2.009	8.8009
VOC	21.59%	0.673	2.9475
Benzene	0.06%	0.002	0.0083
n-Hexane	0.75%	0.023	0.1022
Toluene	0.07%	0.002	0.0093
Ethylbenzene	0.009%	0.0003	0.0013
Xylene	0.033%	0.0010	0.0045

	Light Oil Service		
	Component wt Frac TOC	Emissions lb/hr	Emissions tpy
CO2	0.89%	0.007	0.0291
CH4	4.9%	0.036	0.1591
VOC	100%	0.744	3.2569
Benzene	0.03%	0.000	0.0010
n-Hexane	0.49%	0.004	0.0161
Toluene	0.04%	0.000	0.0013
Ethylbenzene	0.004%	0.000	0.0001
Xylene	0.003%	0.000	0.0001

	Total	
	Emissions lb/hr	Emissions tpy
CO2	0.035	0.152
CH4	2.046	8.960
CO2e	51.2	224.2
VOC	1.417	6.204
Benzene	0.002	0.009
n-Hexane	0.027	0.118
Toluene	0.002	0.011
Ethylbenzene	0.0003	0.0014
Xylene	0.001	0.005

Notes: Component wt fractions taken from facility wet gas inlet analysis
Emissions (lb/hr) = count * lb TOC/hr-component
Emissions (tpy) = lb/yr / 2000 lb/ton

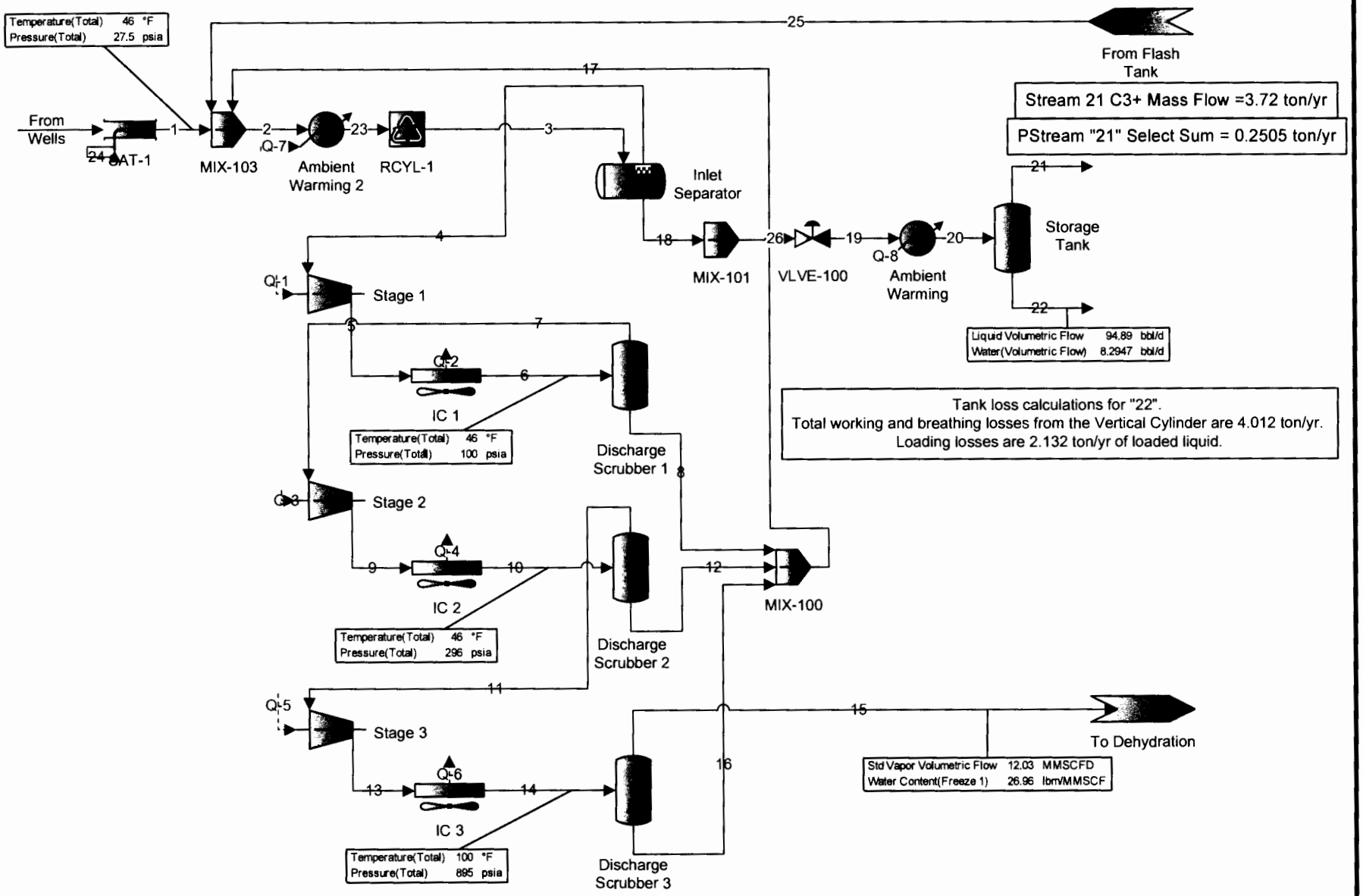

Section 23
Condensate Tank
Controlled Dehy Scenario
[POST-CHANGE]

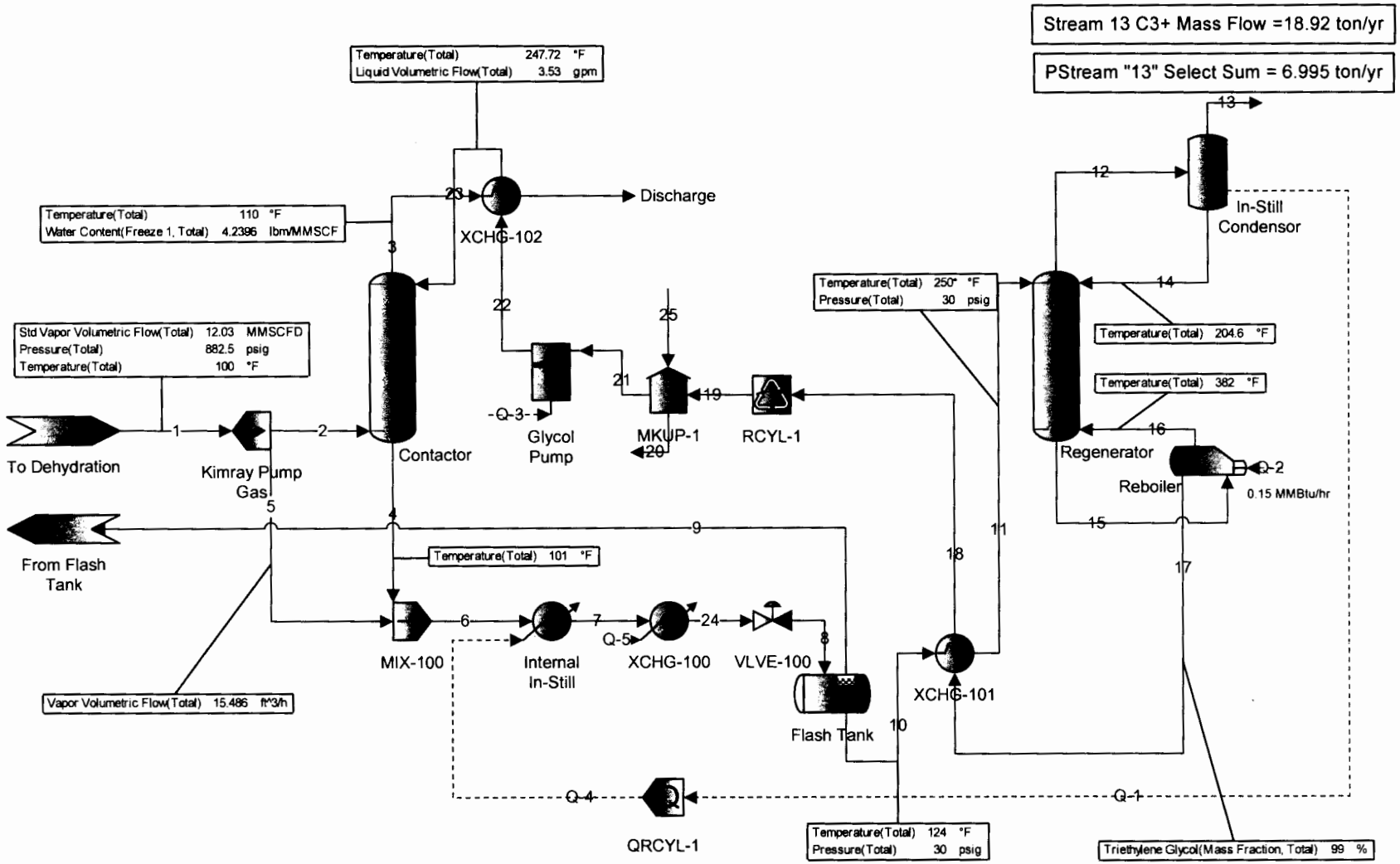

Section 23
Dehydration
Controlled Dehy Scenario
[POST-CHANGE]

Company:	Berry Petroleum
Subject:	Section 23 Compressor Station
Source:	**[POST-CHANGE]** TEG Unit Still Vent (Flash tank routed to facility inlet)

Capacity (site rating) (MMscf/day):	12
Pump Rate (site rating) (gpm):	3.50
Hours/year:	8,760
Condenser flowrate (scfh):	266

Pollutant	Control Device Description	Control Efficiency[a]	Still Vent Emission Factor[b]	Estimated Emissions[c]		
		(% Reduction)	Uncontrolled Basis	Controlled	Uncontrolled	Controlled
			lb/hr	lb/hr	tpy	tpy
CRITERIA & GHGs						
VOC	Combustor	98%	4.31	8.63E-02	1.89E+01	3.78E-01
CO2			0.08	7.73E-02	3.39E-01	2.23E+01
CH4	Combustor	98%	0.25	5.08E-03	1.11E+00	2.22E-02
CO2e					2.81E+01	2.28E+01
TRACE ORGANICS						
n-Hexane	Combustor	98%	2.54E-01	5.09E-03	1.11E+00	2.23E-02
2,2,4-Trimethylpentane	Combustor	98%	7.36E-05	1.47E-06	3.22E-04	6.44E-06
Benzene	Combustor	98%	1.19E+00	2.37E-02	5.20E+00	1.04E-01
Toluene	Combustor	98%	1.53E-01	3.06E-03	6.70E-01	1.34E-02
Ethylbenzene	Combustor	98%	8.87E-04	1.77E-05	3.89E-03	7.77E-05
Xylenes	Combustor	98%	1.88E-03	3.76E-05	8.24E-03	1.65E-04
					Total HAP	0.14

Notes: (a) Control efficiency assumed at 98%

(b) Emission factors based on ProMax, V3.2

Uncontrolled factors represent POST-CHANGE (i.e. with enforceable controls) emissions

(c) Controlled CH4 and VOC is assumed to convert to CO2; ratio of 3.143:1 and 1:1, respectively

Company: Berry Petroleum

Subject: Section 23 Compressor Station

Source: **[POST-CHANGE]** ProMax TEG Still Vent Stream Mass Flow Rates

Component	Post Change Still Vent lb/hr
Methane	0.2539
Ethane	0.2160
n-Propane	0.4086
i-Butane	0.0997
n-Butane	0.3381
i-Pentane	0.2527
n-Pentane	0.4233
3-Methylpentane	0.4365
n-Hexane	0.2543
Cyclohexane	2.1006
Cyclopentane	0.3024
Benzene	1.1868
Heptane	0.0934
Methylcyclohexane	0.0826
Toluene	0.1530
Octane+	0.0059
Ethylbenzene	0.0009
o-Xylene	0.0019
2,2,4-Trimethylpentane	0.0001
Nitrogen	0.0009
Carbon Dioxide	0.0773
Water	11.0919
Triethylene Glycol	0.0071

Company:	Berry Petroleum
Subject:	Section 23 Compressor Station
	[POST-CHANGE] Two 400 bbl Condensate Storage Tanks
Source:	Flashing, Working and Breathing Losses

Capacity (bbl/d):	95
Capacity (gal/yr):	1,454,664
Hours/year:	8,760

Pollutant	Emission Factor[a]	Estimated Emissions[b]	
	Uncontrolled Basis	Uncontrolled	Uncontrolled
	(lb/bbl)	lb/hr	tpy
CRITERIA & GHGs			
VOCs	3.40E-01	1.34E+00	5.88
CO2	7.63E-03	3.02E-02	0.13
CH4	2.29E-01	9.05E-01	3.96
CO2e			99.19
HAPs			
Benzene	1.10E-03	4.36E-03	1.91E-02
2,2,4-Trimethylpentane	1.18E-05	4.66E-05	2.04E-04
Toluene	5.97E-04	2.36E-03	1.03E-02
ethylbenzene	2.63E-05	1.04E-04	4.56E-04
xylenes	8.12E-05	3.21E-04	1.41E-03
n-hexane	1.39E-02	5.49E-02	2.40E-01
		Total HAP	**2.7E-01**

Notes: (a) Emission factors based on ProMax® V3.2

lb/bbl = ProMax Emission Rate tpy * 2000 lb/ton / (365 days/yr * bbl/d)

(b) Estimated emissions

lb/hr = Emission Factor lb/bbl * bbl/day / 24 hr/d

tpy = lb/hr * 8760 hr/yr / 2000 lb/ton

Controlled CH4 and VOC is assumed to convert to CO2; ratio of 3.143:1 and 1:1 lb, respectively

Company:	Berry Petroleum
Subject:	Section 23 Compressor Station
Source:	**[POST-CHANGE]** Truck Loading Losses

Capacity (bbl/d):	95
Capacity (gal/yr):	1,454,664
Hours/year:	8,760

Pollutant	Emission Factor[a]	Estimated Emissions[b]	
	Uncontrolled Basis	Uncontrolled	Uncontrolled
	(lb/bbl)	lb/hr	tpy
CRITERIA & GHGs			
VOCs	7.57E-02	2.99E-01	1.31E+00
CO2	1.00E-03	3.95E-03	1.73E-02
CH4	5.46E-03	2.16E-02	9.46E-02
CO2e			2.38E+00
HAPs			
Benzene	3.55E-05	1.40E-04	6.14E-04
2,2,4-Trimethylpentane	3.25E-06	1.29E-05	5.64E-05
Toluene	4.55E-05	1.80E-04	7.87E-04
ethylbenzene	3.99E-06	1.58E-05	6.91E-05
xylenes	1.51E-05	5.96E-05	2.61E-04
n-hexane	5.51E-04	2.18E-03	9.54E-03
		Total HAP	**1.13E-02**

Notes: (a) Emission factors based on ProMax® V3.2

lb/bbl = ProMax Emission Rate tpy * 2000 lb/ton / (365 days/yr * bbl/d)

(b) Estimated emissions

lb/hr = Emission Factor lb/bbl * bbl/day / 24 hr/d

tpy = lb/hr * 8760 hr/yr / 2000 lb/ton

Company: Berry Petroleum

Subject: Section 23 Compressor Station

Source: **[POST-CHANGE]** ProMax Stream Mass Flow Rates

	Flash Gas	Working and Breathing[(a)]	Total Tank Emissions	Truck Loading[(b)]
Component	**tpy**	**tpy**	**tpy**	**tpy**
Methane	3.7844	0.1779	3.9623	0.0946
Ethane	1.5321	0.9634	2.4955	0.5121
n-Propane	1.3587	0.8989	2.2576	0.4778
i-Butane	0.2858	0.2184	0.5042	0.1161
n-Butane	0.6040	0.4873	1.0913	0.2590
i-Pentane	0.2571	0.2241	0.4812	0.1191
n-Pentane	0.3495	0.3229	0.6724	0.1716
n-Hexane	0.2224	0.0180	0.2404	0.0095
Cyclohexane	0.0610	0.0054	0.0665	0.0029
Cycloheptane	0.0292	0.0246	0.0538	0.0131
Benzene	0.0179	0.0012	0.0191	0.0006
Heptane	0.1395	0.1665	0.3060	0.0885
Methylcyclohexane	0.0456	0.0539	0.0994	0.0286
Toluene	0.0089	0.0015	0.0103	0.0008
Octane	0.0332	0.0437	0.0769	0.0232
Ethylbenzene	0.0003	0.0001	0.0005	0.0001
m-xylene	0.0009	0.0005	0.0014	0.0003
o-Xylene	0.0000	0.0000	0.0000	0.0000
2,2,4-Trimethylpentane	0.0001	0.0001	0.0002	0.0001
Nonane	0.0000	0.0000	0.0000	0.0000
Decane	0.0000	0.0000	0.0000	0.0000
Nitrogen	0.0221	0.0001	0.0222	0.0000
Carbon Dioxide	0.0996	0.0326	0.1322	0.0173

Notes: (a) ProMax utilizes AP-42 ch.7 methodology to calculate working and breathing losses

(b) ProMax utilizes AP-42 ch.5 methodology to calculate loading losses

Loading losses based on submerged loading of dedicated normal service tanker truck

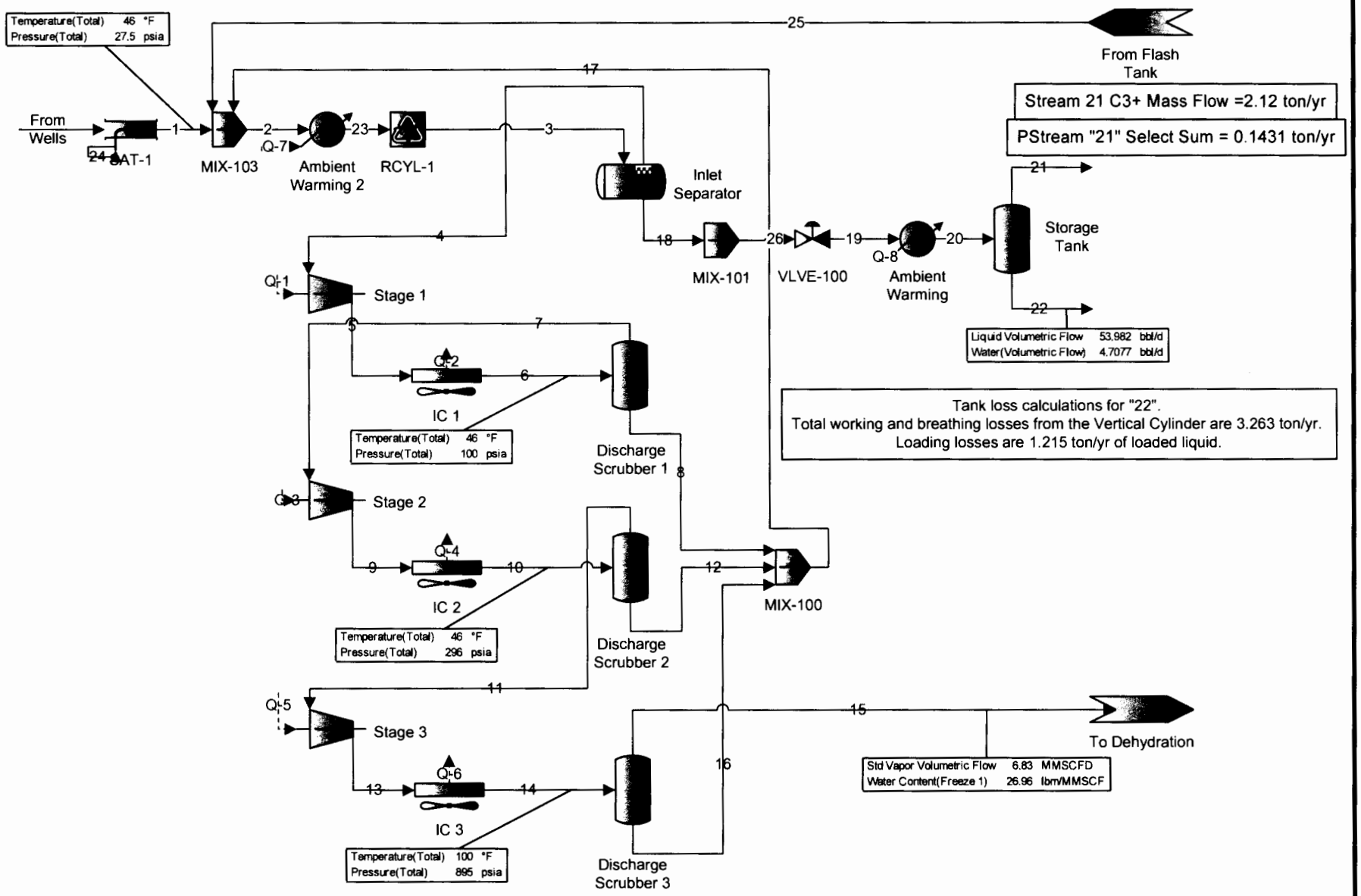

Section 23
Condensate Tank
Uncontrolled Dehy Scenario
[PRE-CHANGE]

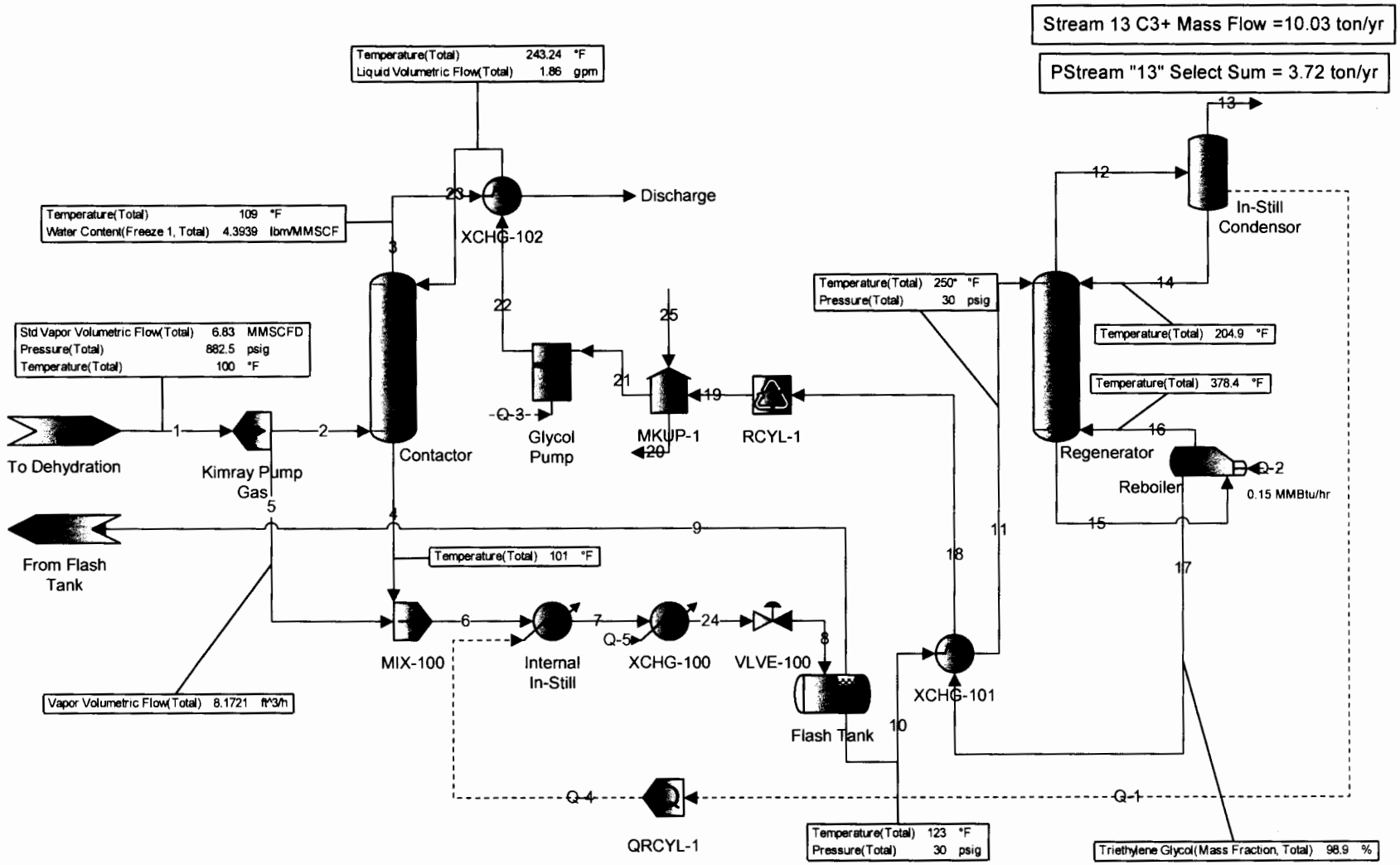

Section 23
Dehydration
Uncontrolled Dehy Scenario
[PRE-CHANGE]

Company:	Berry Petroleum
Subject:	Section 23 Compressor Station
Source:	**[PRE-CHANGE]** TEG Unit Still Vent (Flash tank routed to facility inlet)

Capacity (site rating) (MMscf/day):	6.8
Pump Rate (site rating) (gpm):	1.86
Hours/year:	8,760
Condenser flowrate (scfh):	152

Pollutant	Still Vent Emission Factor[a]	Estimated Emissions[c]
	Uncontrolled Basis	Uncontrolled
	lb/hr	tpy
CRITERIA & GHGs		
VOC	2.29	1.00E+01
CO2	0.04	1.80E-01
CH4	0.13	5.90E-01
CO2e		1.49E+01
TRACE ORGANICS		
n-Hexane	1.34E-01	5.88E-01
2,2,4-Trimethylpentane	3.90E-05	1.71E-04
Benzene	6.32E-01	2.77E+00
Toluene	8.12E-02	3.56E-01
Ethylbenzene	4.71E-04	2.06E-03
Xylenes	9.99E-04	4.38E-03
	Total HAP	3.72

Notes: (a) Emission factors based on ProMax, V3.2

Uncontrolled factors represent PRE-CHANGE emissions

Unit subject to optimum TEG circulation rate requirements

of §63.674(d)(2) in absence of enforceable control devi

Company: Berry Petroleum

Subject: Section 23 Compressor Station

Source: **[PRE-CHANGE]** ProMax TEG Still Vent Stream Mass Flow Rates

Component	Pre Change Still Vent lb/hr
Methane	0.1347
Ethane	0.1145
n-Propane	0.2165
i-Butane	0.0528
n-Butane	0.1792
i-Pentane	0.1339
n-Pentane	0.2244
3-Methylpentane	0.2309
n-Hexane	0.1343
Cyclohexane	3.1006
	0.1601
Benzene	0.6323
Heptane	0.0490
Methylcyclohexane	0.0434
Toluene	0.0812
Octane+	0.0031
Ethylbenzene	0.0005
o-Xylene	0.0010
2,2,4-Trimethylpentane	0.0000
Nitrogen	0.0005
Carbon Dioxide	0.0411
Water	6.3892
Triethylene Glycol	0.0040

Company:	Berry Petroleum
Subject:	Section 23 Compressor Station
	[PRE-CHANGE] Two 400 bbl Condensate Storage Tanks
Source:	Flashing, Working and Breathing Losses

Capacity (bbl/d):	54.0
Capacity (gal/yr):	827,544
Hours/year:	8,760

Pollutant	Emission Factor[a]	Estimated Emissions[b]	
	Uncontrolled Basis	Uncontrolled	Uncontrolled
	(lb/bbl)	lb/hr	tpy
CRITERIA & GHGs			
VOCs	4.01E-01	9.02E-01	3.95
CO2	8.44E-03	1.90E-02	0.08
CH4	2.33E-01	5.25E-01	2.30
CO2e			57.54
HAPs			
Benzene	1.13E-03	2.55E-03	1.12E-02
2,2,4-Trimethylpentane	1.46E-05	3.27E-05	1.43E-04
Toluene	6.32E-04	1.42E-03	6.22E-03
ethylbenzene	2.94E-05	6.62E-05	2.90E-04
xylenes	9.31E-05	2.09E-04	9.17E-04
n-hexane	1.44E-02	3.23E-02	1.42E-01
		Total HAP	**1.6E-01**

Notes: (a) Emission factors based on ProMax® V3.2

lb/bbl = ProMax Emission Rate tpy * 2000 lb/ton / (365 days/yr * bbl/d)

(b) Estimated emissions

lb/hr = Emission Factor lb/bbl * bbl/day / 24 hr/d

tpy = lb/hr * 8760 hr/yr / 2000 lb/ton

Controlled CH4 and VOC is assumed to convert to CO2; ratio of 3.143:1 and 1:1 lb, respectively

Company:	Berry Petroleum
Subject:	Section 23 Compressor Station
Source:	**[POST-CHANGE]** Truck Loading Losses

Capacity (bbl/d):	95
Capacity (gal/yr):	1,454,664
Hours/year:	8,760

Pollutant	Emission Factor[a]	Estimated Emissions[b]	
	Uncontrolled Basis	Uncontrolled	Uncontrolled
	(lb/bbl)	lb/hr	tpy
CRITERIA & GHGs			
VOCs	7.57E-02	2.99E-01	1.31E+00
CO2	1.00E-03	3.95E-03	1.73E-02
CH4	5.46E-03	2.16E-02	9.46E-02
CO2e			2.38E+00
HAPs			
Benzene	3.55E-05	1.40E-04	6.14E-04
2,2,4-Trimethylpentane	3.25E-06	1.29E-05	5.64E-05
Toluene	4.55E-05	1.80E-04	7.87E-04
ethylbenzene	3.99E-06	1.58E-05	6.91E-05
xylenes	1.51E-05	5.96E-05	2.61E-04
n-hexane	5.51E-04	2.18E-03	9.54E-03
		Total HAP	**1.13E-02**

Notes: (a) Emission factors based on ProMax® V3.2

lb/bbl = ProMax Emission Rate tpy * 2000 lb/ton / (365 days/yr * bbl/d)

(b) Estimated emissions

lb/hr = Emission Factor lb/bbl * bbl/day / 24 hr/d

tpy = lb/hr * 8760 hr/yr / 2000 lb/ton

Company: Berry Petroleum
Subject: Section 23 Compressor Station
Source: **[PRE-CHANGE]** ProMax Stream Mass Flow Rates

	Flash Gas	Working and Breathing[(a)]	Total Tank Emissions	Truck Loading[(b)]
Component	**tpy**	**tpy**	**tpy**	**tpy**
Methane	2.1541	0.1444	2.2985	0.0538
Ethane	0.8722	0.7830	1.6552	0.2916
n-Propane	0.7736	0.7308	1.5044	0.2722
i-Butane	0.1628	0.1776	0.3404	0.0662
n-Butane	0.3442	0.3965	0.7407	0.1477
i-Pentane	0.1468	0.1826	0.3294	0.0680
n-Pentane	0.1996	0.2633	0.4629	0.0981
n-Hexane	0.1270	0.0146	0.1417	0.0055
Cyclohexane	0.0349	0.0044	0.0393	0.0017
Cycloheptane	0.0167	0.0200	0.0367	0.0075
Benzene	0.0102	0.0009	0.0112	0.0004
Heptane	0.0793	0.1352	0.2145	0.0504
Methylcyclohexane	0.0259	0.0438	0.0697	0.0163
Toluene	0.0050	0.0012	0.0062	0.0004
Octane	0.0188	0.0353	0.0541	0.0132
Ethylbenzene	0.0002	0.0001	0.0003	0.0000
m-xylene	0.0005	0.0004	0.0009	0.0001
o-Xylene	0.0000	0.0000	0.0000	0.0000
2,2,4-Trimethylpentane	0.0001	0.0001	0.0001	0.0000
Nonane	0.0000	0.0000	0.0000	0.0000
Decane	0.0000	0.0000	0.0000	0.0000
Nitrogen	0.0126	0.0001	0.0126	0.0000
Carbon Dioxide	0.0567	0.0265	0.0831	0.0098

Notes: (a) ProMax utilizes AP-42 ch.7 methodology to calculate working and breathing losses

(b) ProMax utilizes AP-42 ch.5 methodology to calculate loading losses

Loading losses based on submerged loading of dedicated normal service tanker truck

UNITED STATES ENVIRONMENTAL PROTECTION AGENCY
REGION 8
1595 Wynkoop Street
DENVER, CO 80202-1129
Phone 800-227-8917
http://www.epa.gov/region08

2013 SEP 30 PM 12: 02
FILED
EPA REGION VIII
HEARING CLERK

IN THE MATTER OF:	)	
	)	
BERRY PETROLEUM COMPANY	)	**FINAL ORDER**
1999 Broadway, Suite 3700	)	
Denver, CO 80202	)	
	)	
RESPONDENT	)	

Pursuant to 40 C.F.R. §22.13(b) and 22.18, of EPA's Consolidated Rules of Practice, certain provisions of the attached Consent Agreement resolving this matter are hereby approved and incorporated by reference into this Final Order. Any paragraph that provides for compliance or corrective action in the Consent Agreement, including but not limited to, paragraphs 16-23 and 34, are not authorized under this Final Order.

Pursuant to 40 C.F.R. §22.1(c) Complainant shall prepare and both parties shall sign an Administrative Order on Consent or a functionally equivalent order that incorporates the compliance and corrective action provisions in the Consent Agreement, including but not limited to paragraphs 16-23 and 34. The parties shall file the Order on Consent with the Regional Hearing Clerk within 30 days of the signing of this Final Order.

Respondent is **ORDERED** to comply with all of the terms of the Consent Agreement, effective immediately upon receipt by Respondent of this Consent Agreement and Final Order. Both Complainant and Respondent are hereby **ORDERED** to comply with the Final Order.

SO ORDERED THIS 30th **Day of** September**, 2013.**

Elyana R. Sutin
Regional Judicial Officer

UNITED STATES
ENVIRONMENTAL PROTECTION AGENCY
REGION 8

2013 SEP 24 PM 1:24

FILED
EPA REGION VIII
HEARING CLERK

Docket No. CAA-08-2013-0014

IN THE MATTER OF:	)	
	)	
BERRY PETROLEUM COMPANY	)	**COMBINED COMPLAINT**
1999 BROADWAY, SUITE 3700	)	**AND CONSENT AGREEMENT**
DENVER, CO 80202	)	
	)	
Respondent.	)	
	)	

Complainant, United States Environmental Protection Agency, Region 8 (the EPA or Complainant), and Respondent, Berry Petroleum Company, by their undersigned representatives, hereby consent and agree as follows:

I. PRELIMINARY MATTERS

1. This matter is subject to the *Consolidated Rules of Practice Governing the Administrative Assessment of Civil Penalties, and the Revocation, Termination or Suspension of Permits* (Consolidated Rules), 40 C.F.R. part 22. This Combined Complaint and Consent Agreement (Agreement) contains all terms of the settlement agreed to by the parties.

2. This Agreement is entered into by the Parties for the purpose of simultaneously commencing and concluding this matter, as authorized by 40 C.F.R. §22.13(b), and executed pursuant to 40 C.F.R. §22.18(b)(2) and (3) of the Consolidated Rules.

3. The United States Department of Justice has determined the EPA's request for authority to commence an administrative enforcement action in this matter is appropriate, as allowed by §113(d)(1) of the Clean Air Act (the Act), 42 U.S.C. §7413(d)(1). Accordingly, the EPA has jurisdiction over this matter pursuant to §113(d)(1)(B) of the Act.

4. Respondent admits the jurisdictional allegations in this Agreement, but neither admits nor denies the specific factual allegations or legal conclusions made by the Complainant herein.

5. Complainant asserts that settlement of this matter is in the public interest, and Complainant and Respondent agree that entry of this Agreement and Final Order without further litigation and without adjudication of any issue of fact or law is the most appropriate means of resolving this matter.

6. This Agreement, upon incorporation into a final order, applies to and is binding upon the EPA and upon Respondent, and Respondent's officers, directors, employees, agents, successors and assigns. Any change in ownership or corporate status of Respondent shall not alter Respondent's responsibilities under this agreement. Respondent may not sell or otherwise transfer any Facility (defined below) unless Respondent shall have obtained a written undertaking from the purchaser or transferee to comply with paragraphs 16 through 23 hereof with respect to any Facility.

7. Respondent Berry Petroleum Company is a Delaware corporation, with its principal place of business located in Colorado, where it is registered and in good standing with the Colorado Secretary of State as a Colorado foreign corporation. Respondent is therefore a "person" as defined in §7602(e) of the Act.

8. The Complainant alleges Respondent violated the Act, specifically requirements contained in 40 C.F.R. part 63, subpart ZZZZ and 40 C.F.R. part 71, with respect to operations at Respondent's Section 22 Compressor Station located at coordinates latitude 40.0306°, and longitude -110.330233° in Duchesne County, UT.

9. The Complainant alleges Respondent violated the Act, specifically requirements contained in 40 C.F.R. part 63, subpart ZZZZ and 40 C.F.R. part 71, with respect to operations at Respondent's Section 23 Compressor Stations located at coordinates latitude 40.02965°, and longitude -110.408717° in Duchesne County, UT.

10. The Complainant alleges, based on information Respondent provided to the EPA in a "Self-Disclosure" letter dated October 25, 2012 and subsequent updates that engines identified in Attachment A were out of compliance[1] with performance test requirements contained in 40 C.F.R. part 60, subpart JJJJ at the time of the Self-Disclosure. Complainant further alleges that, based on information in the Self-Disclosure letter, the facilities identified in Attachment B were out of compliance with the requirement to timely register such facilities with the reviewing authority in accordance with the Federal Minor New Source Review Program in Indian Country (40 C.F.R. §§ 49.151-49.161).

11. The Respondent's Brundage Gas Plant, Section 7, Section 22 and Section 23 Compressor Stations, and the various facilities identified in Attachments A and B, are collectively referred to as the "Facilities", and are all owned and operated by Respondent in the Uinta Basin in Duchesne County, UT.

12. The Complainant acknowledges the Respondent's cooperation in seeking a resolution to this matter, as well as the Respondent's commitment to implementing pollution control measures as a means of resolution.

[1] Please see Footnote 5 to Attachment A.

13. Although not a part of this agreement and notwithstanding the allegations contained in Paragraphs 8 and 9 above, EPA has determined that Respondent's Engines and Glycol Dehydrators located at the Section 7 Compressor Station, the Section 21 Compressor Station, the Brundage Gas Plant, the Davis Hollow Compressor Station, and Respondent's Glycol Dehydrators located at Respondent's Section 22 Compressor Station and Respondent's Section 23 Compressor Station, are in compliance with 40 C.F.R. Part 63 Subpart HH, 40 C.F.R. Part 63 Subpart ZZZZ, 40 C.F.R Part 70, and 40 C.F.R Part 71, for the time period up to and including the date of this agreement.

14. EPA reserves its right to take any appropriate action against Respondent should EPA determine violations of the rules described in the preceding paragraph occurred at any of the locations described in the preceding paragraph, if EPA comes into possession of information that supports taking such action and the EPA does not currently possess such information as of the date this agreement is finalized.

II. TERMS OF SETTLEMENT

15. Respondent owns and operates the Facilities described in paragraphs 8, 9, 10 and 11, above and which are further described in Attachments A and B.

16. Respondent agrees, within 12 months of the date the Final Order is issued in this matter, to route all emissions from the still vent of the glycol dehydrator at its Section 22 Compressor Station to an installed combustor, designed and operated to achieve at least a 95% reduction of volatile organic compounds (VOC) and hazardous air pollutant (HAP) emissions. Operating and other compliance requirements for the combustor will be established through the air permit outlined in paragraph 19, below.

17. Respondent agrees, within 12 months of the date the Final Order is issued in this matter, to route all emissions from the still vent of the glycol dehydrator at its Section 23 Compressor Station to an installed combustor, designed and operated to achieve at least a 95% reduction of VOC and HAP emissions. Operating and other compliance requirements for the combustor will be established through the air permit outlined in paragraph 19 below.

18. Respondent agrees, within 12 months of the date the Final Order is issued in this matter, to route all emissions from the still vent of the glycol dehydrator at its Section 7 Compressor Station to an installed combustor, designed and operated to achieve at least a 95% reduction of VOC and HAP emissions. Operating and other compliance requirements for the combustor will be established through the air permit outlined in paragraph 19, below.

19. Respondent agrees to voluntarily accept enforceable restrictions on its potential to emit at its Section 7, Section 22 and Section 23 Compressor Stations and, within 6

months of the date the Final Order is issued in this matter, to apply for "synthetic-minor" air permits for its Section 22 and Section 23 Compressor Stations under provisions of the Federal Minor New Source Review Program in Indian Country and for the Section 7 Compressor Station under provisions of the Utah Administrative Code.

20. Respondent agrees, within 12 months of the date the Final Order is issued in this matter, to physically route all emissions from two existing condensate tanks to the combustor installed at its Section 23 Compressor Station per paragraph 17. As an alternative to performing the engineering task described in the preceding sentence, Respondent may elect to implement engineering process changes that result in equivalent emission reductions.

21. Respondent agrees, within 12 months of the date the Final Order is issued in this matter, with respect to its Brundage Gas Plant, to either retrofit the existing rich burn engine with air pollution control(s), or replace such engine with a lean burn engine.

22. Respondent agrees, within 12 months of the date the Final Order is issued in this matter, to conduct a Performance Test on an engine at either its Section 22 Compressor Station or its Section 23 Compressor Station. The Respondent shall provide the agency 30 days' notice prior to conducting such testing. The performance test will concurrently measure mass emissions of NOx, carbon monoxide (CO), VOC and formaldehyde in terms of grams per brake horsepower-hour using test methods and procedures set out in Appendix A of 40 C.F.R Part 60 (NO_X, CO, and VOC) and Appendix A of 40 C.F.R part 63 (formaldehyde). The EPA acknowledges that it may not use results from this Performance Test as the evidentiary basis to establish violations of the Act, if any, that occurred at any facility owned or operated by Respondent prior to the date the Performance Test is conducted. The EPA reserves its right to bring an enforcement action for violations of the Act, other than the alleged violations settled by this Agreement, occurring at any time using other evidence.

23. Respondent agrees to submit quarterly progress reports, including a Certification of Truth, Accuracy & Completeness signed by a responsible official, commencing within 90 days of the date the Final Order is issued in this matter. The purpose of such reports is to provide the status of Respondent's efforts to comply with the terms of settlement in this Agreement. Submissions of reports required by this Paragraph 23, shall be addressed to:

    Air & Toxics Technical Enforcement Program Director
    U.S. EPA Region 8 (Mail Code 8ENF-AT)
    1595 Wynkoop St.
    Denver, CO 80202-1129

The Certification of Truth, Accuracy & Completeness shall read:

I certify under penalty of law that I have examined and am familiar with the information in the enclosed documents, including all attachments. Based on my personal inquiry of those individuals with primary responsibility for obtaining the information, I certify that the statements and information are, to the best of my knowledge and belief, true and complete. I am aware that there are significant penalties for knowingly submitting false statements and information, including the possibility of fines or imprisonment pursuant to section 113(c)(2) of the Act, and 18 U.S.C. §§ 1001, 1341 and 1505.

24. The EPA has analyzed the facts and circumstances in this matter with the statutory factors described in section 113(d)(1)(B) of the Act. The EPA has determined that an appropriate civil penalty to resolve this matter is **TWENTY FIVE THOUSAND DOLLARS ($25,000.00).**

25. Respondent consents to the issuance of a Final Order and consents for the purposes of settlement, but without any admission of liability or wrongdoing, to pay a civil penalty in the amount of **TWENTY FIVE THOUSAND DOLLARS ($25,000.00)** in the manner described below in this paragraph:

    a. Payment is due within 30 calendar days from the date written on the Final Order, to be issued by the Regional Judicial Officer that adopts this Complaint and Consent Agreement. If the due date falls on a weekend or legal federal holiday, then the due date becomes the next business day. The date the payment is made is considered to be the date processed by the Bank described below. Payments received by 11:00 AM EST are processed on the same day, those received after 11:00 AM are processed on the next business day.

    b. The payment shall be made by making a wire transfer as provided below or remitting a cashier's or certified check, including the name and docket number of this case, for the amount, payable to "*Treasurer, United States of America*," to:

CHECK PAYMENT:

U.S. Environmental Protection Agency
Fines and Penalties
Cincinnati Finance Center
PO Box 979077
St. Louis, MO 63197-9000

OVERNIGHT MAIL:

US Bank
1005 Convention Plaza

Mail Station SL-MO-C2GL
St. Louis, MO 63101

Contact: Natalie Pearson
314-418-4087

WIRE TRANSFER:

Wire transfers should be directed to the Federal Reserve Bank of New York
Federal Reserve Bank of New York
ABA = 021030004
Account = 68010727
SWIFT address = FRNYUS33
33 Liberty Street
New York, NY 10045
Field Tag 4200 of the Fedwire message should read AD 68010727 Environmental Protection Agency"
ACH (also known as REX or remittance express)

Automated Clearinghouse (ACH) for receiving US currency
PNC Bank
808 17th Street, NW
Washington, DC 20074
Contact B Jesse White 301-887-6548
ABA = 051036706
Transaction Code 22 – checking
Environmental Protection Agency
Account 310006
CTX Format

ON LINE PAYMENT:

There is now an On Line Payment Option, available through the Dept. of Treasury.

This payment option can be accessed from the information below:

WWW.PAY.GOV
Enter sfo 1.1 in the search field. Open form and complete required fields.

A copy of the check, or notification that the payment has been made by one of the other methods listed above, including proof of the date payment was made, shall be sent simultaneously to:

Ms. Alexis North (8ENF-AT) U.S. EPA Region 8 Technical Enforcement Program 1595 Wynkoop St. Denver, CO 80202-1129	and	Ms. Tina Artemis Regional Hearing Clerk (8RC) U.S. EPA Region 8 1595 Wynkoop St. Denver, CO 80202-1129

c. In the event a payment is not received by the specified due date, interest accrues from 30 days prior to the applicable due date, at a rate established by the Secretary of the Treasury pursuant to 31 U.S.C. §3717, and will continue to accrue until payment in full is received.

d. In addition, a handling charge of fifteen dollars ($15) shall be assessed the 31st day from the applicable due date, and each subsequent thirty-day period that the debt, or any portion thereof, remains unpaid. In addition, a six percent (6%) per annum penalty shall be assessed on any unpaid principal amount if payment is not received within 90 days of the applicable due date. Payments are first applied to handling charges, 6% penalty interest, and late interest; then any balance is applied to the outstanding principal amount.

e. If Respondent elects to pay in installments, Respondent may nevertheless elect to pay the then-remaining amount due at any time prior to the applicable due date without penalty.

f. Respondent agrees that the penalty shall never be claimed as a federal or other tax deduction or credit.

26. Payment of the penalty in this matter does not relieve Respondent of its obligations to comply with the requirements of the Act and the Act's implementing regulations.

27. Failure by Respondent to comply with any of the terms of this Agreement shall constitute a breach of the Agreement and may result in referral of the matter to the United States Department of Justice for enforcement of this Agreement and for such other relief as may be appropriate.

28. Nothing in this Agreement shall be construed as a waiver by the EPA or any other federal entity of its authority to seek costs or any appropriate penalty associated with any collection action instituted as a result of Respondent's failure to perform pursuant to the terms of this Agreement. However, the EPA agrees that, before seeking such costs or penalty, it will first provide notice to Respondent of any failure to perform existing at the time of such notice and a reasonable opportunity to explain circumstances associated therewith and/or to demonstrate that performance was achieved or that no such performance is necessary.

III. GENERAL PROVISIONS

29. Each undersigned representative of the Parties to this Agreement certifies that he or she is fully authorized by the Party represented to bind the Party to the terms and conditions of this Agreement and to execute and legally bind that Party to this Agreement.

30. The Parties agree to submit this Agreement to the Regional Judicial Officer, with a request that it be incorporated into a final order. This Agreement, upon incorporation into a final order by the Regional Judicial Officer and full satisfaction by the Parties, shall be a complete, full and final settlement of the violations alleged in this Agreement.

31. The terms, conditions, and compliance requirements of this Agreement may not be modified or amended except upon the written agreement of the Parties, and approval of a Regional Judicial Officer.

32. Each Party shall bear its own costs and attorneys fees in connection with all issues associated with this Agreement.

33. Respondent remains obligated to comply with all requirements of the Act and its implementing regulations.

34. This Agreement may be executed in counterparts.

UNITED STATES ENVIRONMENTAL
PROTECTION AGENCY, REGION 8,
Office of Enforcement, Compliance, and
Environmental Justice

COMPLAINANT.

Date: Sept. 24, 2013 By: _____

Andrew M. Gaydosh
Assistant Regional Administrator
Office of Enforcement, Compliance and
Environmental Justice

BERRY PETROLEUM COMPANY

RESPONDENT.

Date: 9/17/2013 By: George W. Ciotti

PRINTED NAME: George W. Ciotti

TITLE: VICE PRESIDENT OF ROCKY MOUNTAIN PRODUCTION

ATTACHMENT A: ENGINE DETAILS

All engines are new (commenced construction after 6/12/06 AND manufacture dates after 7/1/2008) spark ignition, internal combustion engines (SI ICE) between 25 hp and 100 hp, NOT gasoline or rich burn LPG and are Non-certified.

Location	Well Name	Manufacture	Model	Serial #	Manufacture Date[2]	Start-up Date[3]	Compliance Demonstration Completed?
30-54Inj	30-54 Inj	Caterpillar	G3406	CTS00676	1/1/2010	10/1/2009	N/A[4]
15-26-56	15-26-56	AJAX	E565	85955	6/1/2011	3/30/2012	Yes
14-2-56	14-2-56	AJAX	E565	85956	6/1/2011	4/7/2012	Yes
11-3D-56	11-3D-56	AJAX	E565	85970	7/1/2011	4/28/2012	Yes
3-21D-56	3-21D-56	AJAX	E565	85971	7/1/2011	4/21/2012	Yes
14-14D-56	14-14D-56	AJAX	E565	85969	7/1/2011	1/18/2012	Yes
15-23D-56	15-23D-56	Arrow	L-795	L-600620	Unknown	3/30/2012	Yes
3-34-45	3-34-45	Arrow	L-795	L600885	Unknown	9/8/2012	Yes
2-5D-56	2-5D-56	Arrow	L-795	L-600736	10/20/2011	7/23/2012	Yes
11-17-56	11-17-56	Arrow	L-795	L-600489	2/17/2011	7/1/2010	Yes
9-8D-56	9-8D-56	Arrow	L-795	L-600497	2/24/2011	7/1/2012	Yes
13H-3-56	13H-3-56	Arrow	L-795	L-600618	Unknown	10/25/2011	Pending[5]
8 29 45	8 29 45	Arrow	L-795	L-600785	10/20/2011	1/22/2012	Yes
15-15D-56	15-15D-56	Arrow	L-795	L-600882	2/24/2011	6/25/2012	Yes
15-15D-56	9-15D-56	Arrow	L-795	L-600496	3/19/2012	6/25/2012	Yes
10 21 56	10 21 56	Arrow	L-795	L-600886	3/20/2012	6/7/2012	Yes
8-30D-56	8-30D-56	Arrow	L-795	L600883	3/20/2012	7/22/2012	Yes
3-15D-56	3-15D-56	Arrow	L-795	L-600490	2/10/2011	7/23/2011	Yes
8-16D-56	8-16D-56	Arrow	L-795	L-600619	Unknown	9/22/2011	Yes
13-29-45	13-29-45	Arrow	L-795	L-600784	10/20/2011	3/2/2012	Yes
16-3-54	16-3-54	Ajax	E-565	85996	Unknown	9/30/2012	Yes
16-30D-56	16-30D-56	Arrow	L-795	L600492	Unknown	8/16/2012	Yes
1A-29-54	1A-29-54	Arrow	C-106	303814C	Unknown	9/13/2012	Yes
15-9D-54	15-9D-54	Ajax	E-565	86004	Unknown	8/23/2012	Yes
14-9D-54	14-9D-54	Ajax	E-565	86011	Unknown	8/21/2012	Yes

[2] "Unknown" dates could not be determined due to a lack of records and an unreadable data plate.

[3] This table provides the date of first production as a proxy for the start-up date. Precise start-up dates are not known, but typically occur approximately one week after first production.

[4] Engine has been permanently removed from service.

[5] Engine has been and still is out of service pending certain drilling activity. An appropriate compliance determination will be completed after the engine is placed in service.

ATTACHMENT B: FEDERAL MINOR NSR PROGRAM IN INDIAN COUNTRY – EXISTING TRUE MINOR SOURCES FOR WHICH REGISTRATIONS WERE SUBMITTED

Source Name	Location			
	Qtr-Qtr	Section	Township	Range
BCUT 8-21	SENE	21	5S	4W
F 1-11-65	NENE	11	6S	5W
F 11-2D-65	NESW	2	6S	5W
F 14-6D-64	SESW	6	6S	4W
F 15-1D-65	SWSE	1	6S	5W
F 16-5-65	SESE	5	6S	5W
F 2-12D-65	NWNE	12	6S	5W
F 2-2-65	NWNE	2	6S	5W
F 5-3-64	SWNW	3	6S	4W
F 5-4-65	SWNW	4	6S	5W
F 5-6-65	SWNW	6	6S	4W
F 6-1-65	SENW	1	6S	5W
F 8-2D-64	SENE	2	6S	4W
F 9-1D-65	NESE	1	6S	5W
LF 1-22-57	NENE	22	5S	7W
LF 1-31D-45	NENE	31	4S	5W
LT 5-23D-56	SWNW	23	5S	6W
LT 6-28-45	SENW	28	4S	5W
LT 7-27-45	SWNE	27	4S	5W
LT 8-30D-56	SENE	30	5S	6W
LT 9-28D-45	NESE	28	4S	5W
LT 9-9D-56	NESE	9	5S	6W
UT 10S-21D-54	NWSE	21	5S	4W
UT 1-14D-55	NENE	14	5S	5W
UT 12-29D-55	NWSW	29	5S	5W
UT 1-29	NENE	29	5S	4W
UT 13-35D-55	SWSW	35	5S	5W
UT 13H-16-55	SWSW	16	5S	5W
UT 14-9D-54	SESW	9	5S	4W
UT 2-24-54	NWNE	24	5S	4W
UT 2-30-55	NWNE	30	5S	5W
UT 3-25-56	NENW	25	5S	6W
UT 3-30-55	NENW	30	5S	5W
UT 3-35-54	NENW	35	5S	4W
UT 4-20D-55	NWNW	20	5S	5W
UT 5-13-54	SWNW	13	5S	4W

Source Name	Location			
	Qtr-Qtr	Section	Township	Range
UT 5-25-56	SWNW	25	5S	6W
UT 5-35-54	SWNW	35	5S	4W
UT 6-24-54	SENW	24	5S	4W
UT 6-30-55	SENW	30	5S	5W
UT 7-19-55	SWNE	19	5S	5W
UT 7-21-54	SWNE	21	5S	4W
UT 7-24-56	SWNE	24	5S	6W
UT 7-25-56	SWNE	25	5S	6W
UT 8-10D-54	SENE	10	5S	4W
UT 8-20-55	SENE	20	5S	5W
UTE 10-24-54	NWSE	24	5S	4W
UTE 11-13-54	NESW	13	5S	4W
UTE 11-25-56	NESW	25	5S	6W
UTE 11-29-54	NESW	29	5S	4W
UTE 11-35-54	NESW	35	5S	4W
UTE 13-35-54	SWSW	35	5S	4W
UTE 1-35-54	NENE	35	5S	4W
UTE 14-18-55	SESW	18	5S	5W
UTE 14-24-56	SESW	24	5S	6W
UTE 14-25-54	SESW	25	5S	4W
UTE 15-35-54	SWSE	35	5S	4W
UTE 16-24-54	SESE	24	5S	4W
UTE 16-25-54	SESE	25	5S	4W
UTE 16-3-54	SESE	3	5S	4W
UTE 7-35-54	SWNE	35	5S	4W
UTE 8-19-55	SENE	19	5S	5W
UTE 8-25-54	SENE	25	5S	4W
UTE 9-35-54	NESE	35	5S	4W
UTF 2-13-55	NWNE	13	5S	5W

CERTIFICATE OF SERVICE

The undersigned certifies that the original of the attached **COMBINED COMPLAINT, CONSENT AGREEMENT and FINAL ORDER** in the matter **BERRY PETROLEUM COMPANY; DOCKET NO.: CAA-08-2013-0014** was filed with the Regional Hearing Clerk on September 24, 2013, the **FINAL ORDER** was filed on September 30, 2013.

Further, the undersigned certifies that a true and correct copy of the documents were delivered to, Dana Stotsky, Enforcement Attorney, U. S. EPA – Region 8, 1595 Wynkoop Street, Denver, CO 80202-1129. True and correct copies of the aforementioned documents were sent and placed in the United States mail certified/return receipt and emailed on September 30, 2013 to:

Counsel for Respondent:

Lawrence E. Volmert
Holland and Hart LLP.
555 Seventeenth Street, Suite 3200
Denver, CO 80202-3979
lvolmert@hollandhart.com

And emailed to:

Kim White
U. S. Environmental Protection Agency
Cincinnati Finance Center
26 W. Martin Luther King Drive (MS-0002)
Cincinnati, Ohio 45268

September 24, 2013

Tina Artemis
Paralegal/Regional Hearing Clerk