Natural Gas Industry

Green House Gas Control
&
Business Opportunity

GHG Reductions

- Essentially Efficiency Improvements
  - Energy Use Efficiency
  - Product Delivery Efficiency
- Not a Historical Focus for Upstream Operations
  - Paradigm of “Free” Lease Gas
- Focus is Changing Due to Competition and Profit Enhancement
- Efficiency = Cost Reduction/Product Sales

Green Completions Update

- Well Clean-up and Completion W/O Flaring or Venting
- Changes in Fracture Design
- Changes in Surface Completion Equipment
- Changes in Paradigms and Flow-Back Procedures
- Piloted in 2000; Operational 2001 Forward

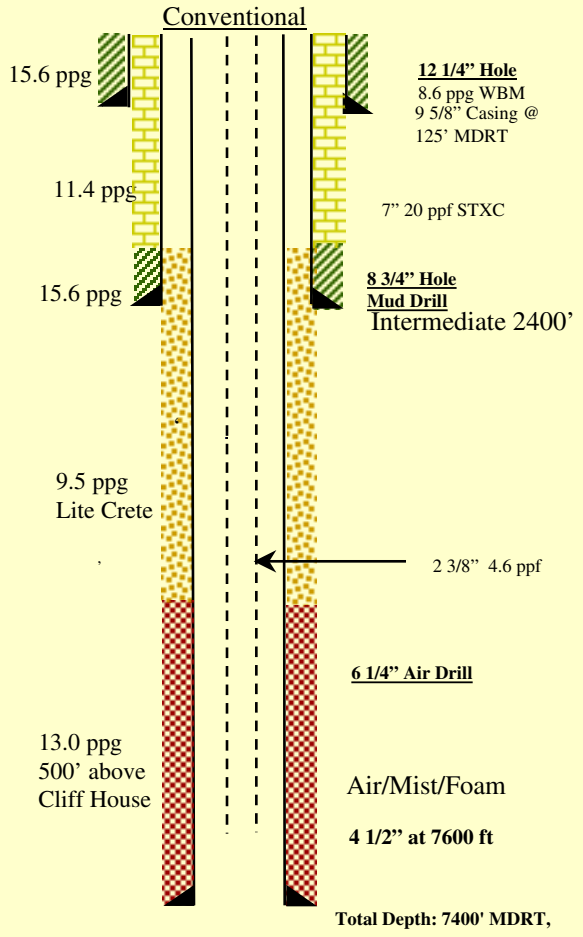

Schematic – temporary, mobile surface facilities

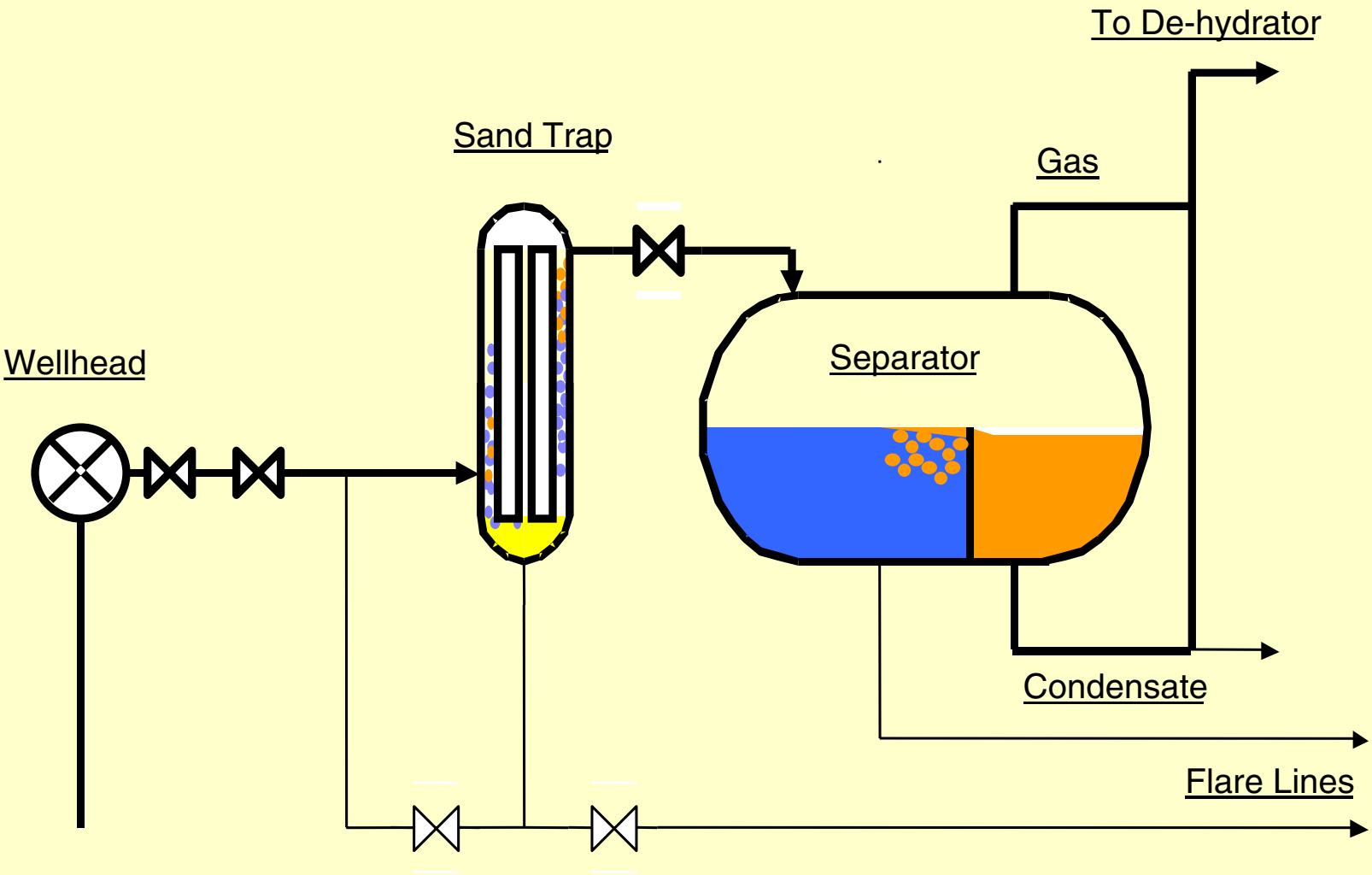

NATCO

Green Completions - Results

- Capital Investment of ~ $1.2 MM
- 1,515,126 MCF of Gas Not Flared = Sold
- 28,730 Bbls Condensate Not Flared = Sold
- Value to Date = $5,791,342.50
- ~ 109,000 Metric Tonnes of CO_2 Not Generated;
  ~ 2,200 Metric Tonnes of Methane Not Released

“Smart” Automation
Well Venting Optimization

- PLC based Automation System ~ 2,200 Wells
- With “Lift” Algorithms to Optimize:
  - Plunger Lift Cycles
  - Well-Shut-in Cycles
  - Well Vent Cycles & Time
- Includes “Vent Time” Monitoring and Recording

Southern San Juan Quarterly Vent

EL Paso & SAMS Combined Jan 2003

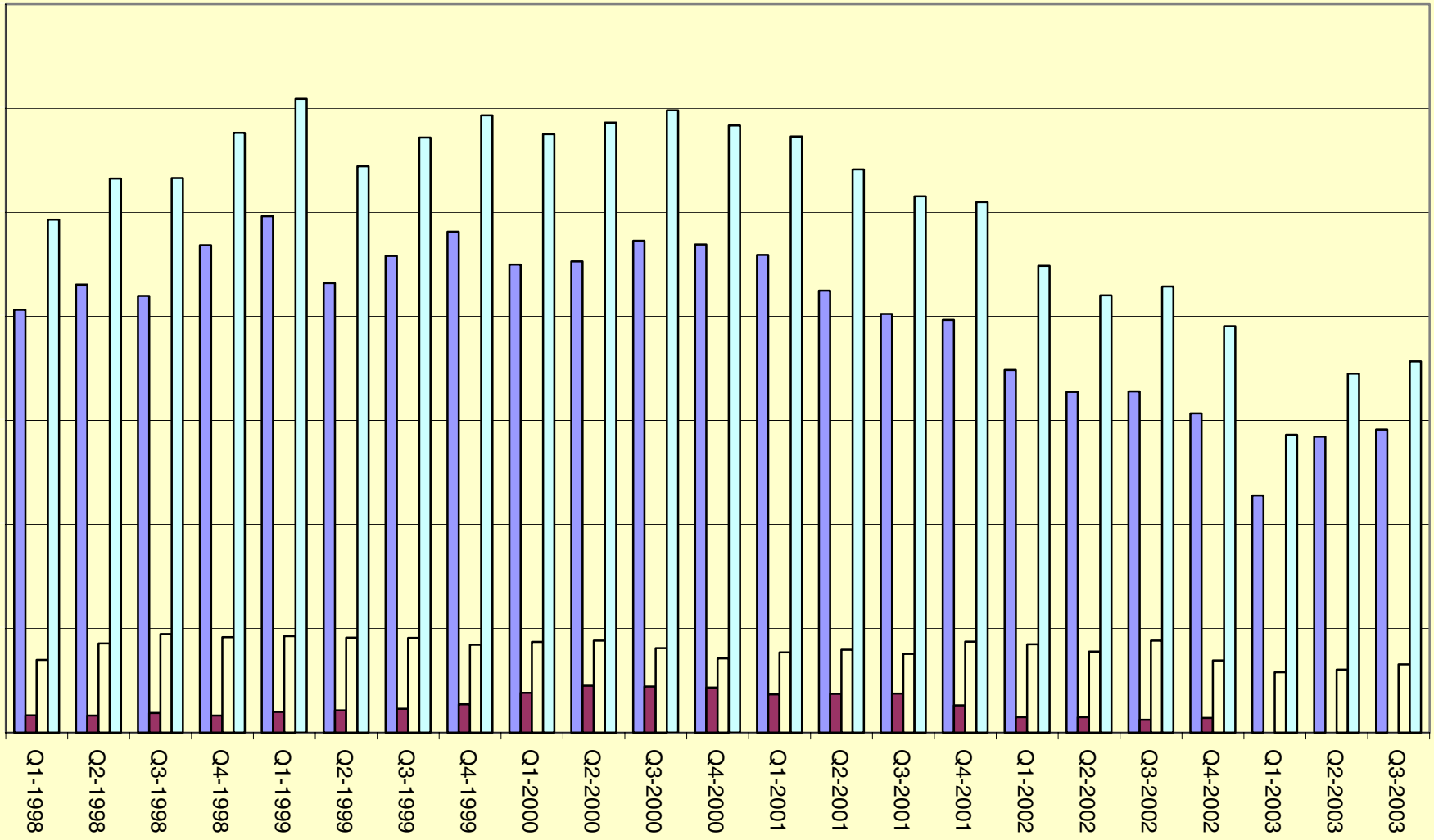

El Paso Automated Monthly Production & Vent Minutes

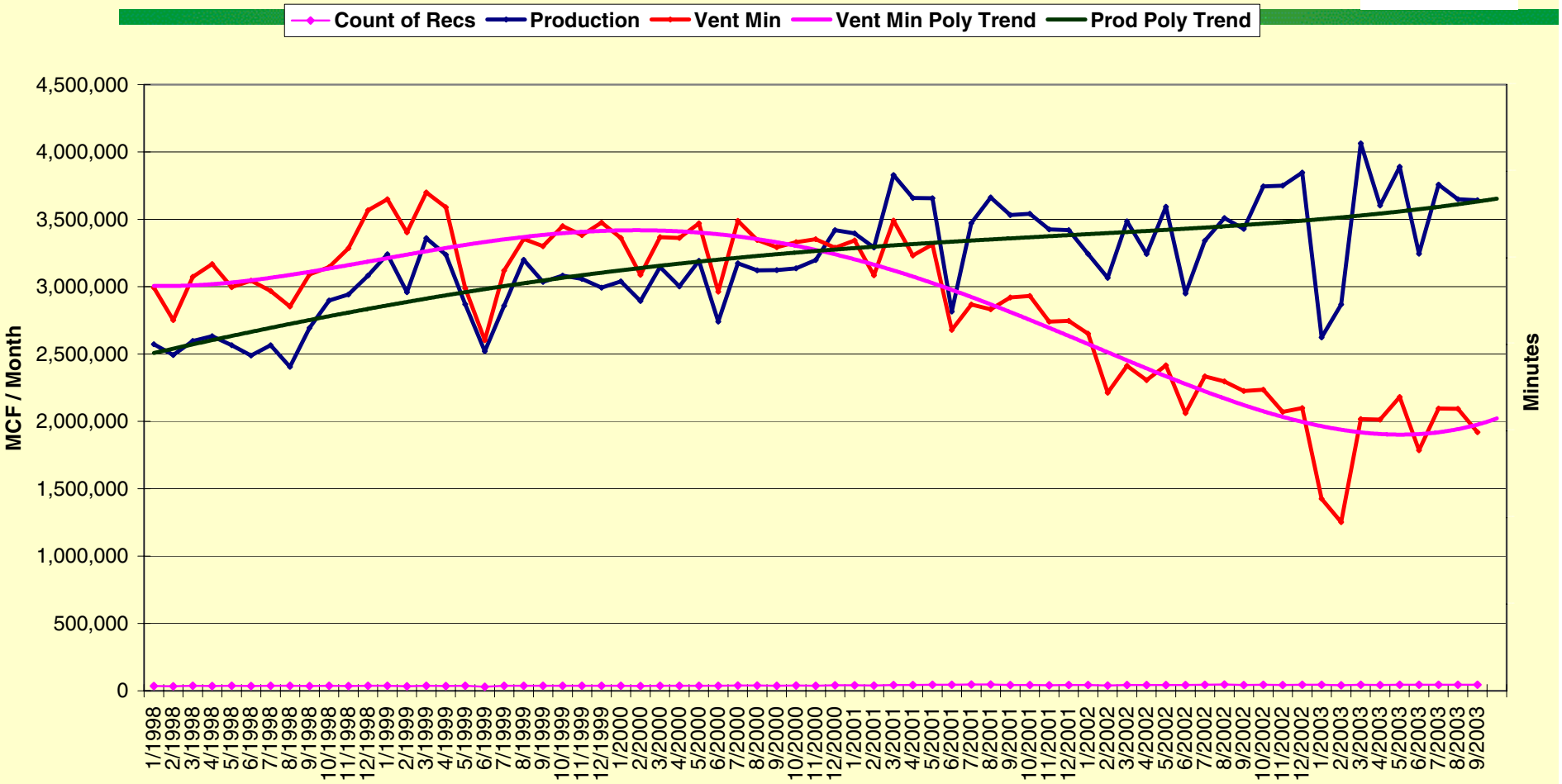

"Smart" Automation Results

- ~$12 MM Capital Investment
- 3,767,624 MCF Not Vented
- $13,186,684 Value to Date
- Reduced to Date:
  - ~ 61,325 Metric Tonnes of Methane
  - ~ 24,000 Metric Tonnes of Other Hydrocarbons
- Corollary Benefits:
  - Better Well Control
  - Production Uplift – Not Included Above

Well Venting
Next Steps??

Contact Information

Gordon Reid Smith

BP America Production Company

MC – 3.324

501 Westlake Park Blvd

Houston, TX 77079

281-366-7515 Telephone

Smithgr1@bp.com