ECMPS Reporting Instructions
Monitoring Plan

United States Environmental Protection Agency
Office of Air and Radiation
Clean Air Markets Division
1201 Constitution Ave, NW
Washington, DC 20004

March 3, 2021

Table of Contents

Page

1.0 Introduction: The Monitoring Plan 1
2.0 Monitoring Plan (Root Element) 4
2.1 Monitoring Plan Comment Data 5
2.2 Unit Stack Configuration Data 6
2.3 Monitoring Location Data 8
3.0 Stack Pipe Data 9
4.0 Unit Data 12
4.1 Unit Capacity Data 15
4.2 Unit Control Data 17
4.3 Unit Fuel Data 21
5.0 Monitoring Location Attribute Data 24
6.0 Monitoring Method Data 27
6.1 Supplemental MATS Monitoring Method Data 36
7.0 Component Data 40
7.1 Analyzer Range Data 47
8.0 Monitoring System Data 49
8.1 Monitoring System Fuel Flow Data 58
8.2 Monitoring System Component Data 60
9.0 Monitoring Formula Data 62
10.0 Monitoring Default Data 90
11.0 Monitoring Span Data 105
12.0 Rectangular Duct WAF Data 114
13.0 Monitoring Load Data 118
14.0 Monitoring Qualification Data 125
14.1 Monitoring Qual LME Data 128
14.2 Monitoring Qual Percent Data 133
14.3 Monitoring Qual LEE Data 138

List of Tables

Page

Table 1: Stack Pipe ID Prefixes 9
Table 2: Parameter Codes and Descriptions 18
Table 3: Control Codes and Descriptions 18
Table 4: Unit Fuel Codes and Descriptions 21
Table 5: Unit Fuel Indicator Codes and Descriptions 22
Table 6: Demonstration Method to Qualify for Monthly Fuel Sampling for GCV Codes and Descriptions 23
Table 7: Demonstration Method to Qualify for Daily or Annual Fuel Sampling for %S (ARP) Codes and Descriptions 23
Table 8: Duct/Stack Material Codes and Descriptions 25
Table 9: Duct/Stack Shape Codes and Descriptions 25
Table 10: Parameter Codes and Descriptions for Monitoring Methods 28
Table 11: Measured Parameters and Applicable Monitoring Methods 29
Table 12: Substitute Data Codes and Descriptions 32
Table 13: Bypass Approach Codes and Descriptions 32
Table 14: Supplemental MATS Parameter Codes 37
Table 15: Supplemental MATS Measured Parameters and Applicable Monitoring Methods 37
Table 16: Component Type Codes and Descriptions 41
Table 17: Sample Acquisition Method Codes for Components 43
Table 18: Moisture Basis Codes and Descriptions for CEM Analyzer and Sorbent Trap Sampling Train Components 44
Table 19: Analyzer Range Codes and Descriptions 47
Table 20: System Type Codes and Descriptions 50
Table 21: System Designation Codes and Descriptions 51
Table 22: Monitoring System Fuel Codes and Descriptions 52
Table 23: Units of Measure for Maximum Fuel Flow Rate Codes and Descriptions 59
Table 24: Parameter Codes and Descriptions for Monitoring Formula 63
Table 25: F-Factor* Reference Table 66
Table 26: SO_2 Formula References 68
Table 27: SO_2 Emissions Formulas 68
Table 28: SO_2 Emission Rate Formula Reference Table for the MATS Rule 70
Table 29: SO_2 Emission Formulas for the MATS Rule 70
Table 30: NO_x Emission Rate Formula Reference Table 71
Table 31: NO_x Emission Rate Formulas (lb/mmBtu) 72
Table 32: Hg Emission Formula Reference Table for the MATS Rule 73
Table 33: Hg Emissions Formulas for the MATS Rule 73
Table 34: HCl Emission Rate Formula Reference Table for the MATS Rule 75
Table 35: HCl Emission Formulas for the MATS Rule 75
Table 36: HF Emission Rate Formula Reference Table for the MATS Rule 76
Table 37: HF Emission Formulas for the MATS Rule 77
Table 38: Moisture Formulas* 78
Table 39: CO_2 Formula Reference Table 78
Table 40: CO_2 Concentration and Mass Emission Rate Formulas 79
Table 41: Heat Input Formula Reference Table 82
Table 42: Heat Input Formulas 82

Table 43: Apportionment and Summation Formulas....84
Table 44: NO_x Mass Emissions Formulas (lbs/hr)....85
Table 45: Miscellaneous Formula Codes....85
Table 46: Representations for Electronic Reporting of Formulas....87
Table 47: Parameter Codes and Descriptions for Monitoring Default....93
Table 48: Rounding Rules for Default Values....94
Table 49: Fuel-Specific Minimum Default Moisture Values for SO_2, NO_x, CO_2, and Heat Input Rate Calculations....96
Table 50: Fuel-Specific Maximum Default Moisture Values for NO_x Emission Rate Calculations....96
Table 51: NO_x Emission Factors (lb/mmBtu for Low Mass Emissions Units)....97
Table 52: SO_2 Emission Factors (lb/mmBtu) for Low Mass Emissions Units....97
Table 53: CO_2 Emission Factors (ton/mmBtu) for Low Mass Emissions Units....97
Table 54: Units of Measure Codes by Parameter....98
Table 55: Default Purpose Codes and Descriptions....98
Table 56: Monitoring Default Fuel Codes and Descriptions....99
Table 57: Monitoring Default Operating Condition Codes and Descriptions....102
Table 58: Default Source Codes and Descriptions....103
Table 59: Component Type Codes and Descriptions for Monitor Span....106
Table 60: Provision for Calculating MPC/MEC/MPF Codes and Descriptions....106
Table 61: Criteria for MPC/MEC/MPF Determinations....108
Table 62: Flow Span Calibration Units of Measure....111
Table 63: WAF Method Code and Descriptions....116
Table 64: Maximum Load Value Codes and Descriptions....119
Table 65: Qualification Type Codes and Descriptions....126
Table 66: Data Requirements for Monitoring Qual LME....129
Table 67: Qualification Data Type Codes and Descriptions....134
Table 68: Example Data for Qualification Based on Historical and Projected Data....135
Table 69: Example of Gas-Fired Qualification Based on Unit Operating Data....136

List of Figures

Page

Figure 1: Monitoring Plan XML Schema Complex Elements 3
Figure 2: *Monitoring Plan* XML Elements 4
Figure 3: *Monitoring Plan Comment Data* XML Elements 5
Figure 4: *Unit Stack Configuration Data* XML Elements 6
Figure 5: *Monitoring Location Data* Elements 8
Figure 6: *Stack Pipe Data* Elements 10
Figure 7: *Unit Data* XML Elements 13
Figure 8: *Unit Capacity Data* XML Elements 15
Figure 9: *Unit Control Data* XML Elements 17
Figure 10: *Unit Fuel Data* XML Elements 21
Figure 11: *Monitoring Location Attribute Data* XML Elements 24
Figure 12: *Monitoring Method Data* XML Elements 28
Figure 13: *Supplemental MATS Monitoring Method Data* XML Elements 36
Figure 14: *Component Data* XML Elements 40
Figure 15: *Analyzer Range Data* XML Elements 47
Figure 16: *Monitoring System Data* XML Elements 49
Figure 17: *Monitoring System Fuel Flow Data* XML Elements 58
Figure 18: *Monitoring System Component Data* XML Elements 60
Figure 19: *Monitoring Formula Data* XML Elements 62
Figure 20: *Monitoring Default Data* XML Elements 92
Figure 21: *Monitoring Span Data* XML Elements 105
Figure 22: *Rectangular Duct WAF Data* XML Elements 115
Figure 23: *Monitoring Load Data* XML Elements 118
Figure 24: *Monitoring Qualification Data* XML Elements 125
Figure 25: *Monitoring Qual LME Data* XML Elements 129
Figure 26: *Monitoring Qual Percent Data* XML Elements 133
Figure 27: *Monitoring Qual LEE Data* XML Elements 139

ECMPS Reporting Instructions
Monitoring Plan

1.0 Introduction: The Monitoring Plan

About This Document

In the Emissions Collection and Monitoring Plan System (ECMPS), data must be submitted to the EPA through the Client Tool using extensible-markup language (XML) format. XML files must contain certain data elements, which are defined in the XML schema. (Note: More information about the ECMPS XML Schemas can be found in the XML Schema Description Documents.)

The purpose of the reporting instructions is to provide the necessary information for owners and operators to meet the reporting requirements for sources affected by:

1) The Acid Rain Program (ARP);
2) The Cross-State Air Pollution Rule (CASPR);
3) The Mercury and Toxics Standards (MATS) Rule; and
4) Other programs required to report data using these XML schemas.

These instructions explain how to report the required data for the applicable regulations. Owners and operators of units should refer to the applicable regulations for information about what data are required to be reported.

The Monitoring Plan XML Schema is made up of a root element, complex elements, and simple elements. A simple element is a single piece of data. A complex element is a group of simple elements which are logically grouped together. The root element is the base of the XML schema.

The elements are related to each other in parent-child relationships. The root element is the parent element of the entire schema. Complex elements are children of the root element, and complex elements can also be children of other complex elements. If a complex element is dependent on a parent complex element, the child complex element cannot be included in the XML file unless the appropriate parent complex element is also included. Figure 1 below illustrates the relationships between the monitoring plan root element and the complex elements.

This document provides instructions on how the required data should be reported using this data structure. For each complex element, this document includes a separate section which includes:

- ***Element* Overview:** An overview of the kinds of data submitted under the element, including general information not specific to any associated child complex elements or simple elements
- ***Element* XML Model:** A model diagram of the element and any associated child complex elements or simple elements

- ***Element* Dependencies:** Description of dependent relationships for the element
- ***Element* XML Elements:** Instructions for submitting data for each associated simple element
- **Specific Considerations:** Additional considerations, including information that applies to particular types of monitoring plan configurations

About Monitoring Plan Data

The Monitoring Plan describes how a monitoring configuration monitors its emissions. Monitoring plan data define relationships between stacks, pipes, and units, specify locations at a facility from which emissions are monitored, and identify systems of monitoring equipment by detailing the individual system components. Monitoring plan data also provide operational characteristics and qualifications for certain special types of monitoring (e.g., Low Mass Emissions monitoring).

Figure 1: Monitoring Plan XML Schema Complex Elements

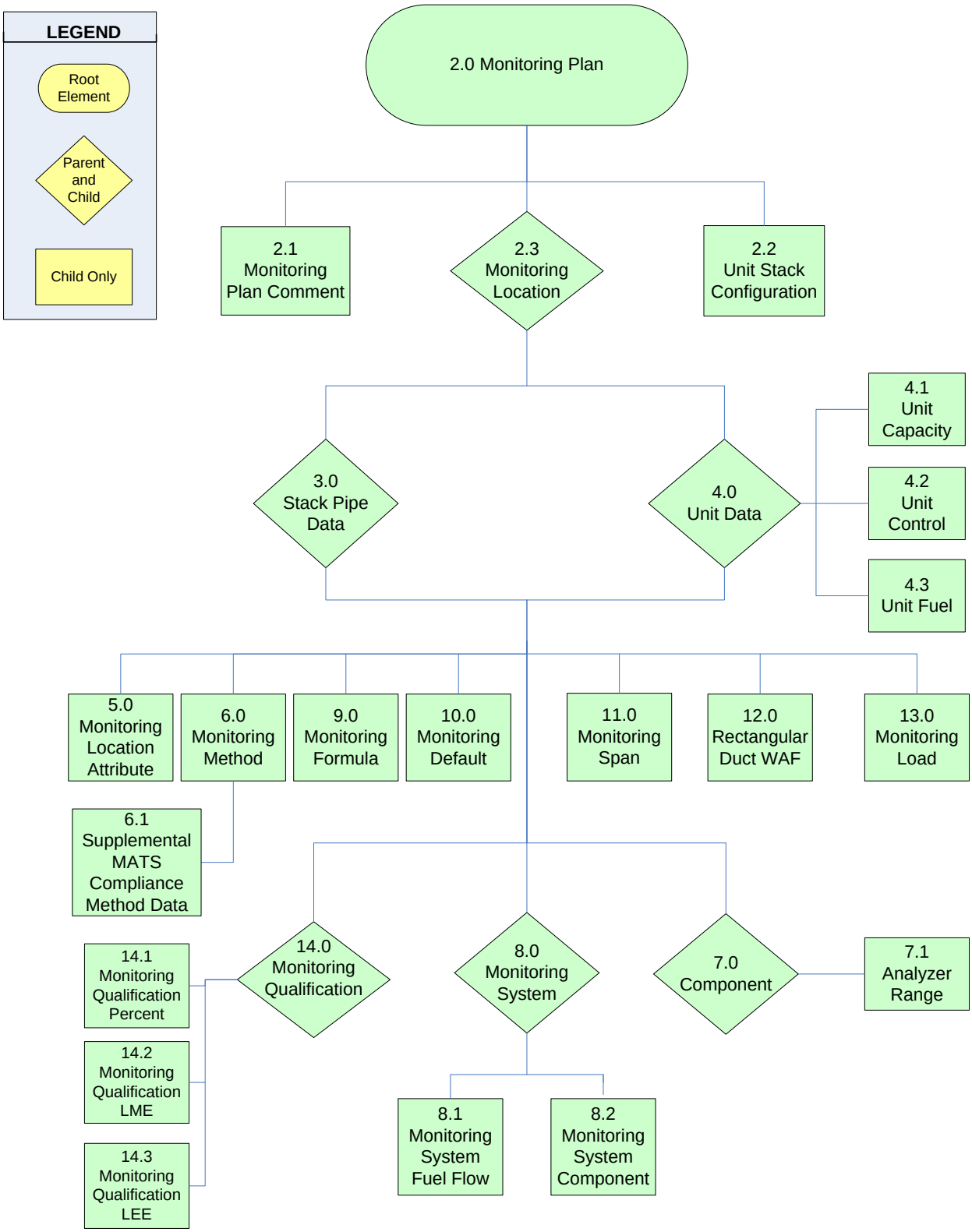

2.0 Monitoring Plan (Root Element)

Monitoring Plan Overview

The MONITORING PLAN root element defines the configuration of the monitoring plan and is the "keystone" record for building a monitoring plan. Hence the MONITORING PLAN record includes essential identifying information for a complete monitoring plan. Submit one MONITORING PLAN record for each monitoring plan and ensure that it is the first data record reported.

Monitoring Plan XML Model

Figure 2: *Monitoring Plan* XML Elements

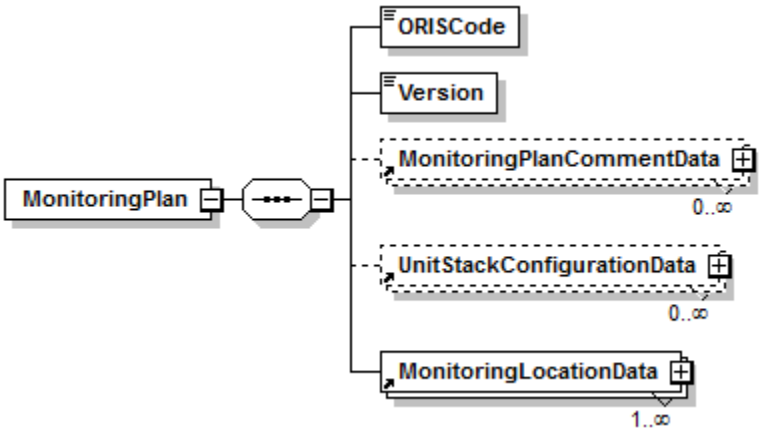

Dependencies for *Monitoring Plan*

The MONITORING PLAN record is not dependent on any other elements of the monitoring plan.

The following complex elements specify additional monitoring plan data and are dependent on the MONITORING PLAN record:

- **MONITORING PLAN COMMENT DATA**
- **UNIT STACK CONFIGURATION DATA**
- **MONITORING LOCATION DATA**

These complex elements *cannot* be submitted for a monitoring plan unless an applicable MONITORING PLAN record is included.

Monitoring Plan XML Elements

ORIS Code *(ORISCode)*
Report the code that indicates the unique identifying number given to a plant by the Energy Information Administration (EIA) and remains unchanged under ownership changes.

Version *(Version)*
Report the XML schema version number. Note that this is a numeric field -- do not include a "v" before the number.

2.1 Monitoring Plan Comment Data

Monitoring Plan Comment Data Overview

If necessary, you may submit a MONITORING PLAN COMMENT DATA record with each monitoring plan submission or revision. The MONITORING PLAN COMMENT DATA record allows you to include comments regarding the monitoring plan submission. If you do not have any comments on the plan, omit the MONITORING PLAN COMMENT DATA complex element entirely.

Monitoring Plan Comment Data XML Model

Figure 3: *Monitoring Plan Comment Data* XML Elements

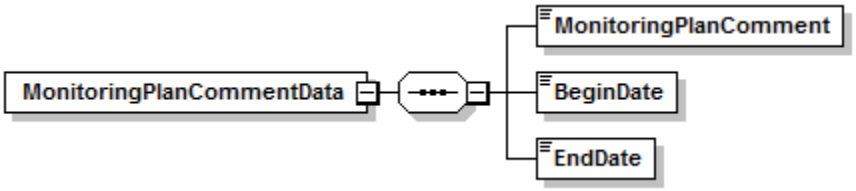

Dependencies for *Monitoring Plan Comment Data*

The MONITORING PLAN COMMENT DATA record is dependent on the MONITORING PLAN record.

No other records are dependent upon the MONITORING PLAN COMMENT DATA record.

Monitoring Plan Comment Data XML Elements

Monitoring Plan Comment *(MonitoringPlanComment)*
Report any comments concerning the monitoring plan.

Begin Date *(BeginDate)*
Report the date on which the comment became effective.

End Date *(EndDate)*
If applicable, report the last date on the comment was effective. This value should be left blank for active records.

2.2 Unit Stack Configuration Data

Unit Stack Configuration Data Overview

Submit a UNIT STACK CONFIGURATION DATA record for each unit-stack relationship defined in the monitoring plan. Each UNIT STACK CONFIGURATION DATA record identifies a specific configuration or relationship between a unit and a monitored stack through which it exhausts, or a unit and a pipe that serves the unit. This relationship defines the configuration and methods used for monitoring. See the instructions for the STACK PIPE DATA record for more information about when and how to define multiple and common stacks and pipes.

Unit Stack Configuration Data XML Model

Figure 4: *Unit Stack Configuration Data* XML Elements

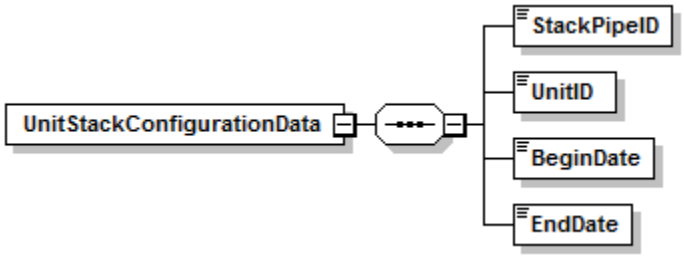

Dependencies for *Unit Stack Configuration Data*

The UNIT STACK CONFIGURATION DATA record is dependent on the MONITORING PLAN record.

No other records are dependent upon the UNIT STACK CONFIGURATION DATA record.

Unit Stack Configuration Data XML Elements

Stack Pipe ID *(StackPipeID)*
Report the Stack Pipe ID that corresponds to the monitoring location. This is the alphanumeric code assigned by a source to identify a multiple or common stack or pipe at which emissions are determined.

Unit ID *(UnitID)*
Report the applicable Unit ID for the unit that is linked to the stack or pipe. This is the one to six alphanumeric character code assigned by a source to identify a unit.

Begin Date *(BeginDate)*
Report the date on which some or all of the emissions from the unit were first measured at the common or multiple stack/pipe. This data should be equal to or later than the ActiveDate for the StackPipe, as reported in the STACK PIPE DATA record.

End Date *(EndDate)*
If the unit is no longer linked to the stack or pipe in terms of monitored emissions, report the last date on which the emissions from the unit were measured at the common or multiple stack/pipe. For an active relationship, leave this field blank.

2.3 Monitoring Location Data

Monitoring Location Data Overview

The MONITORING LOCATION DATA record is used to identify the unit(s) in the monitoring plan, as well as any stack(s) or pipe(s) defined as a monitoring location. Submit a MONITORING LOCATION DATA record for each stack, pipe, and unit in the monitoring plan. See instructions for the STACK PIPE DATA record for more information about defining stacks and pipes.

Monitoring Location Data XML Model

Figure 5: *Monitoring Location Data* Elements

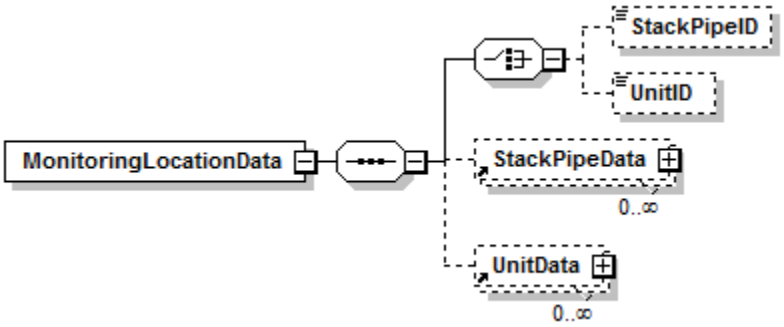

Dependencies for *Monitoring Location Data*

The MONITORING LOCATION DATA record is dependent on the MONITORING PLAN record.

The following complex elements specify additional monitoring location data and are dependent on the MONITORING LOCATION DATA record:

- **STACK PIPE DATA**
- **UNIT DATA**

These complex elements *cannot* be submitted for a monitoring location unless an applicable MONITORING LOCATION DATA record is included.

Monitoring Location Data XML Elements

Stack Pipe ID *(StackPipeID)*
If this record is for a stack or pipe, report the Stack Pipe ID that corresponds to the monitoring location. This is the alphanumeric code assigned by a source to identify the stack or pipe. If this record is for a unit, leave this field blank.

Unit ID *(UnitID)*
If this record is for a unit, report the Unit ID that corresponds to the monitoring location being described. This is the alphanumeric code assigned by a source to identify a unit. If this record is for a Stack or Pipe, leave this field blank.

3.0 Stack Pipe Data

Stack Pipe Data Overview

Submit a STACK PIPE DATA record describing each stack or pipe at which emissions from more than one unit are measured or determined (i.e., a common stack or pipe) or stacks from which partial emissions from a unit are measured (i.e., a multiple stack). Bypass stacks should be defined as monitoring locations only if the emissions from the bypass are monitored (as opposed to using maximum potential or other appropriate substitute data values).

Types of Stacks and Pipes

When assigning IDs to stacks or pipes, consider the following types of stacks and pipes and the associated ID prefix:

- Common Stacks: If a stack serves more than one unit and emissions are monitored at that stack, it must be defined as a "common stack" for reporting purposes. Assign a common stack ID beginning with the prefix "CS" followed by one to four alphanumeric characters.
- Common Pipes: If a fuel pipe serves more than one unit and fuel flow is monitored at that common pipe header, it must be defined as a "common pipe" for reporting purposes. Assign a pipe ID beginning with the prefix "CP" followed by one to four additional alphanumeric characters. If more than one fuel type is associated with the same group of units, it is not necessary to report a common pipe for each fuel type; rather, define one "common pipe" and define separate fuel flow monitoring systems for each fuel type at the pipe.
- Multiple Ducts or Stacks: A multiple stack defines two or more ducts or stacks in which CEMS are located for a single unit. (It also defines any additional monitoring location(s) for a single unit that is also monitored at a common stack or common pipe.) If a unit has a CEMS located in more than one duct or stack from the unit, assign a multiple stack ID to each monitoring location. Assign a stack ID beginning with the prefix "MS" followed by one to four alphanumeric characters.
- Multiple Pipes: For a combined cycle (CC) peaking unit with a combustion turbine and duct burner for which: (1) Appendices D and E are used; and (2) fuel flow is measured separately for the turbine and duct burner, define multiple pipes, i.e., one for each fuel flowmeter location. Assign a pipe ID beginning with the prefix "MP" followed by one to four alphanumeric characters. Consult with the EPA Clean Air Markets Division or state agency prior to initial monitoring plan submission if a facility has this configuration.

Table 1 summarizes the information above:

Table 1: Stack Pipe ID Prefixes

Prefix	Description
CS	Common Stack
CP	Common Pipe
MS	Multiple Stack or Duct
MP	Multiple Pipe

Stack Pipe Data XML Model

Figure 6: *Stack Pipe Data* Elements

Dependencies for *Stack Pipe Data*

The STACK PIPE DATA record is dependent on the MONITORING LOCATION DATA record.

The following complex elements specify additional monitoring plan data and are dependent on the STACK PIPE DATA record:

- **MONITORING LOCATION ATTRIBUTE DATA**
- **MONITORING METHOD DATA**
- **MONITORING FORMULA DATA**
- **MONITORING DEFAULT DATA**
- **MONITORING SPAN DATA**
- **MONITORING LOAD DATA**
- **COMPONENT DATA**
- **MONITORING SYSTEM DATA**
- **MONITORING QUALIFICATION DATA**
- **RECTANGULAR DUCT WAF DATA**

These complex elements *cannot* be submitted for a stack or pipe unless an applicable STACK PIPE DATA record is included.

Stack Pipe Data XML Elements

Active Date *(ActiveDate)*
Report either the date emissions first went through the stack or, for a stack or pipe existing prior to the date that the associated unit(s) became subject to the applicable program, report that program effective date. For a stack or pipe that became operational after the associated unit's program effective date, report the actual date on which emissions first exited the stack or fuel was combusted at the pipe or stack location by an affected unit.

Retire Date *(RetireDate)*
If applicable, report the actual date the stack or pipe was last used for emissions measurement or estimation purposes. Do not report estimated dates in this field. For active stacks and pipes, leave this field blank.

4.0 Unit Data

***Unit Data* Overview**

The UNIT DATA record is used to define, for each unit identified in the MONITORING LOCATION DATA record, whether that unit is a non-load-based unit under Part 75. Submit a UNIT DATA record for each unit that is part of the monitoring plan configuration, whether or not monitoring is to be performed at the unit level. Information regarding the unit's heat input capacity, associated controls, and available fuels will be linked to each unit identified by a UNIT DATA record.

Unit Data XML Model

Figure 7: *Unit Data* XML Elements

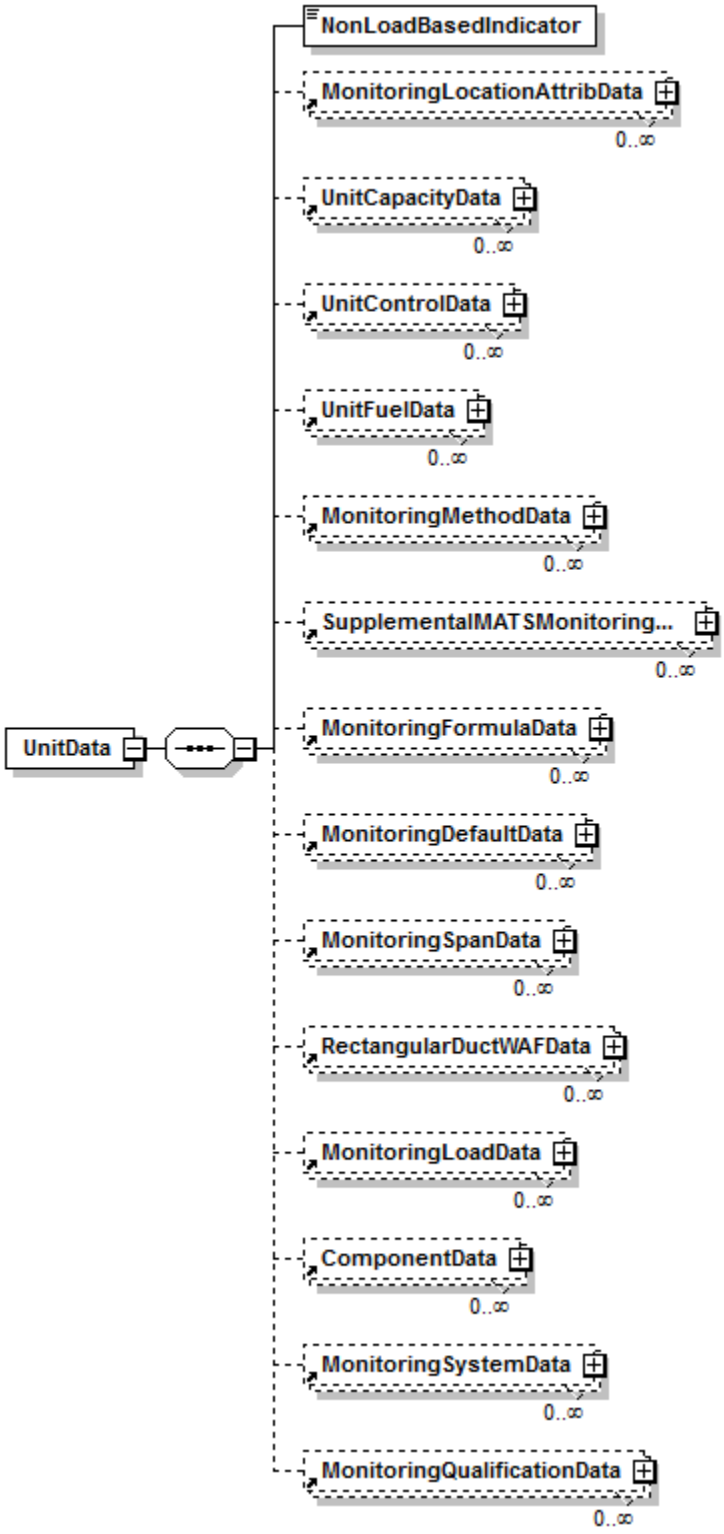

Dependencies for *Unit Data*

The UNIT DATA record is dependent on the MONITORING LOCATION DATA record.

The following complex elements specify additional unit data and are dependent on the UNIT DATA record:

- **MONITORING LOCATION ATTRIBUTE DATA**
- **UNIT CAPACITY DATA**
- **UNIT CONTROL DATA**
- **UNIT FUEL DATA**
- **MONITORING METHOD DATA**
- **MONITORING FORMULA DATA**
- **MONITORING DEFAULT DATA**
- **MONITORING SPAN DATA**
- **MONITORING LOAD DATA**
- **COMPONENT DATA**
- **MONITORING SYSTEM DATA**
- **MONITORING QUALIFICATION DATA**
- **RECTANGULAR DUCT WAF DATA**

These complex elements *cannot* be submitted for a unit unless an applicable UNIT DATA record is included. See the instructions for each complex element to determine whether or not to include it for a particular unit.

Unit Data XML Elements

Non Load Based Indicator *(NonLoadBasedIndicator)*
Report a non load-based indicator value of "1" if the unit does not produce electrical or steam load. Report a "0" if the unit does produce electrical or steam load.

4.1 Unit Capacity Data

Unit Capacity Data Overview

Report a UNIT CAPACITY DATA record for each unit defined in a UNIT DATA record of the monitoring plan. This record is used to specify the maximum hourly heat input capacity for each unit. Update this record only if the maximum hourly heat input capacity changes based on the design of the unit or its observed data over the past five years.

For more information on derated, combined cycle, and Low Mass Emission (LME) units for this record see the "Specific Considerations" section below.

Unit Capacity Data XML Model

Figure 8: *Unit Capacity Data* XML Elements

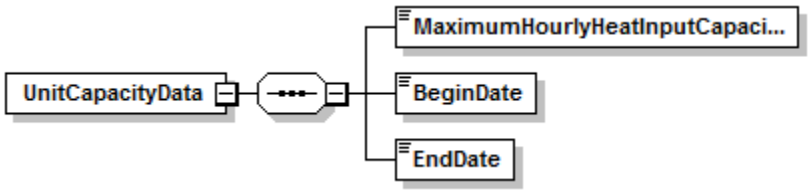

Dependencies for *Unit Capacity Data*

The UNIT CAPACITY DATA record is dependent on the UNIT DATA record.

No other records are dependent upon the UNIT CAPACITY DATA record.

Unit Capacity Data XML Elements

Maximum Hourly Heat Input Capacity *(MaximumHourlyHeatInputCapacity)*
Report the design heat input capacity (in mmBtu/hr) for the unit or the highest hourly heat input rate observed in the past five years, whichever is greater.

Begin Date *(BeginDate)*
Report the date on which the reported maximum hourly heat input capacity for a unit became effective.

End Date *(EndDate)*
Report the last date on which the reported maximum hourly heat input capacity for a unit was valid. This value should be left blank for active records.

Specific Considerations

Derated Units
If a unit has been derated, report the derated maximum heat input capacity.

Combined Cycle Units

For combined cycle units without duct burners, report the maximum heat input of the unit combustion turbine. For combined cycle units with duct burners, report the combined maximum heat input for the combustion turbine and duct burner.

Low Mass Emission (LME) Units

Enter the maximum rated hourly heat input for units using the LME methodology as defined in §72.2 or modified according to §75.19(c)(2)(i).

4.2 Unit Control Data

Unit Control Data Overview

The UNIT CONTROL DATA record is used to identify emissions controls that are utilized or planned for the specified unit. Submit a UNIT CONTROL DATA record for each type of NO_x, SO_2, or particulate control equipment in place or planned for each unit defined in the monitoring plan. If emission controls that are specific to Hg, HCl or HF removal are also in place or planned for a unit, EPA recommends that you submit additional UNIT CONTROL DATA records to represent these controls. These data include information describing the parameter emitted and the corresponding control type. For controls with co-benefits (e.g., flue gas desulfurization systems (FGD)), just list the control once using the parameter code that corresponds to the primary pollutant controlled.

Do not report unit control data for any parameter (NOX, SO2, HG, HCl, HF, or PART) for which the unit is uncontrolled. Similarly, do not report unit control data for a parameter if emissions of that parameter are controlled only by limiting production or by switching fuels.

Unit Control Data XML Model

Figure 9: *Unit Control Data* XML Elements

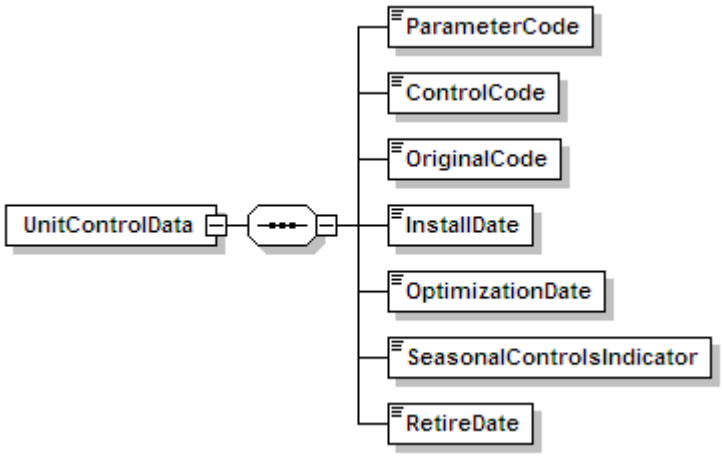

Dependencies for *Unit Control Data*

The UNIT CONTROL DATA record is dependent on the UNIT DATA record.

No other records are dependent upon the UNIT CONTROL DATA record.

Unit Control Data XML Elements

Parameter Code *(ParameterCode)*
Report the parameter being controlled by using one of the following uppercase codes as shown in Table 2:

Table 2: Parameter Codes and Descriptions

Code	Description
NOX	Nitrogen Oxides
SO2	Sulfur Dioxide
PART	Particulates (opacity)
HG	Mercury
HCL	Hydrogen chloride
HF	Hydrogen fluoride

Control Code *(ControlCode)*
Report the code for the corresponding control device by reporting the uppercase control code as shown in Table 3:

Table 3: Control Codes and Descriptions

Parameter	Control Code	Description
NOX	CM	Combustion Modification/Fuel Reburning
	DLNB	Dry Low NO_x Premixed Technology (turbines only)
	H2O	Water Injection (turbines and cyclone boilers only)
	LNB	Low NO_x Burner Technology (dry bottom wall-fired boilers or process heaters only)
	LNBO	Low NO_x Burner Technology with Overfire Air (dry bottom wall-fired boilers, dry bottom turbo-fired boilers, or process heaters only)
	LNC1	Low NO_x Burner Technology with Close-Coupled Overfire Air (OFA) (tangentially fired units only)
	LNC2	Low NO_x Burner Technology with Separated OFA (tangentially fired units only)
	LNC3	Low NO_x Burner Technology with Close-Coupled and Separated OFA (tangentially fired units only)
	LNCB	Low NO_x Burner Technology for Cell Burners
	NH3	Ammonia Injection
	O	Other
	OFA	Overfire Air
	SCR	Selective Catalytic Reduction
	SNCR	Selective Non-Catalytic Reduction
	STM	Steam Injection

Parameter	Control Code	Description
SO2	DA	Dual Alkali
	DL	Dry Lime FGD
	FBL	Fluidized Bed Limestone Injection
	MO	Magnesium Oxide
	O	Other
	SB	Sodium Based
	WL	Wet Lime FGD
	WLS	Wet Limestone
PART	B	Baghouse(s)
	ESP	Electrostatic Precipitator
	HESP	Hybrid Electrostatic Precipitator
	WESP	Wet Electrostatic Precipitator
	WS	Wet Scrubber
	O	Other
	C	Cyclone
HG	UPAC	Injection of untreated powdered activated carbon (PAC) sorbents
	HPAC	Injection of halogenated powdered activated carbon (PAC) sorbents
	SB	Sodium Based
	SORB	Injection of other (non-PAC) sorbents
	APAC	Additives to enhance PAC and existing equipment performance
	CAT	A catalyst (gold, palladium, or other) used to oxidize mercury
	REAC	Regenerative Activated Coke Technology
HCL, HF	DSI	Dry Sorbent Injection
	SB	Sodium Based

Original Code *(OriginalCode)*
For each record, indicate whether or not the control equipment was installed and operational as part of the original unit design. The number "1" indicates the equipment was a part of the original unit, and "0" indicates that it was not.

Install Date *(InstallDate)*
Report the approximate date on which controls were installed or will be installed at the unit, if the control equipment was not part of the original installation. If the equipment was part of the original installation, leave this field blank.

Optimization Date *(OptimizationDate)*
Report the approximate date on which optimization of the control equipment was completed and the equipment was fully operational at the unit, if the control equipment was not part of the original installation. If the equipment was part of the original installation, leave this field blank.

Seasonal Controls Indicator *(SeasonalControlsIndicator)*
Report a "1" in the Seasonal Control Indicator field if the NO_x control equipment is used only during the ozone season. If not, report "0" (zero).

Retire Date *(RetireDate)*
Report the date on which the control equipment was removed or retired from the unit. This value should be left blank if the control equipment is still in use.

4.3 Unit Fuel Data

Unit Fuel Data Overview

For each unit identified in the UNIT DATA record of the monitoring plan, submit a UNIT FUEL DATA record for each type of fuel combusted by the unit. The UNIT FUEL DATA record is used to indicate the primary, secondary, emergency, and startup fuels combusted by each unit, to report changes in the types of fuels combusted and to indicate when such changes occurred.

Unit Fuel Data XML Model

Figure 10: *Unit Fuel Data* XML Elements

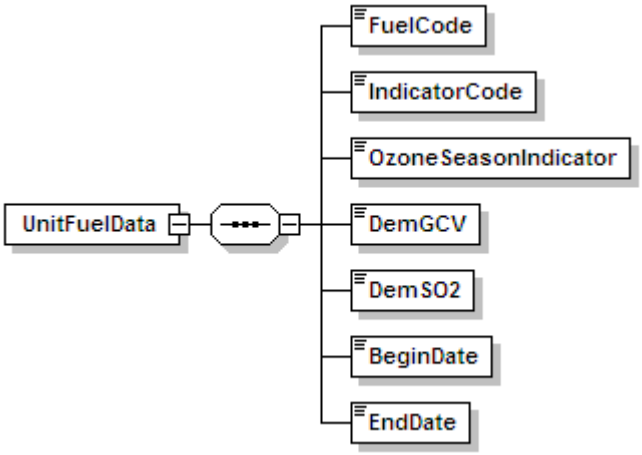

Dependencies for *Unit Fuel Data*

The UNIT FUEL DATA record is dependent on the UNIT DATA record.

No other records are dependent upon the UNIT FUEL DATA record.

Unit Fuel Data XML Elements

Fuel Code *(FuelCode)*
Report one of the following uppercase codes to indicate the types of fuel combusted by a unit as shown in Table 4:

Table 4: Unit Fuel Codes and Descriptions

Code	Description
C	Coal
CRF	Coal Refuse (culm or gob)
DSL	Diesel Oil*
LPG	Liquefied Petroleum Gas
NNG	Natural Gas

Code	Description
OGS	Other Gas
OIL	Residual Oil
OOL	Other Oil
OSF	Other Solid Fuel
PNG	Pipeline Natural Gas (as defined in §72.2)
PRG	Process Gas
PRS	Process Sludge
PTC	Petroleum Coke
R	Refuse
TDF	Tire Derived Fuel
W	Wood
WL	Waste Liquid

* Diesel oil is defined in §72.2 as low sulfur fuel oil of grades 1-D or 2-D, as defined by ASTM D-975-91, grades 1-GT or 2-GT, as defined by ASTM D2880-90a, or grades 1 or 2, as defined by ASTM D396-90. By those definitions (specifically ASTM D396-90) and for the purposes of this program, kerosene and ultra-low sulfur diesel fuel (ULSD) are considered subsets of diesel oil and therefore should be identified with the code DSL. If a fuel does not qualify as one of these types, do not report the code DSL.

Indicator Code *(IndicatorCode)*
Report whether the fuel type listed is the primary fuel (as defined in §72.2), a backup (secondary) fuel, a startup fuel, or an emergency fuel for this unit by using one of the uppercase codes shown in Table 5:

Table 5: Unit Fuel Indicator Codes and Descriptions

Code	Description
E	Emergency
I	Ignition (startup)
P	Primary
S	Backup (secondary)

Ozone Season Indicator *(OzoneSeasonIndicator)*
Report "1" in the Ozone Season Indicator for the secondary fuel(s) record(s) if fuel switching (to a secondary fuel or fuels) is used for seasonal control of ozone. If not, report "0" (zero).

Demonstration Method to Qualify for Monthly Fuel Sampling for GCV *(DemGCV)*
If applicable, report the method used to demonstrate that a unit using Appendix D qualifies for monthly GCV fuel sampling (see Section 2.3.5 of Appendix D) by using one of the following uppercase codes as shown in Table 6:

Table 6: Demonstration Method to Qualify for Monthly Fuel Sampling for GCV Codes and Descriptions

Code	Description
GHS	720 Hours of Data Using Hourly Sampling
GGC	720 Hours of Data Using an Online Gas Chromatograph
GOC	720 Hours of Data Using an Online Calorimeter

Demonstration Method to Qualify for Daily or Annual Fuel Sampling for %S (ARP) *(DemSO2)*

If applicable, report the method used to demonstrate that an Acid Rain unit using Appendix D qualifies for daily or annual percent sulfur sampling (see Section 2.3.6 of Appendix D) using one of the uppercase codes shown in Table 7:

Table 7: Demonstration Method to Qualify for Daily or Annual Fuel Sampling for %S (ARP) Codes and Descriptions

Code	Description
SHS	720 Hours of Data Using Manual Hourly Sampling
SGC	720 Hours of Data Using Online Gas Chromatograph

Begin Date *(BeginDate)*

Report the first date on which the unit combusted this fuel type (or the best available estimate if the exact date is not known). The fuel type Begin Date must precede or coincide with the date of any monitoring system certifications while combusting the fuel.

End Date *(EndDate)*

Report the last date on which a given fuel type was combusted at the unit if the combustion of this fuel type has been permanently discontinued at this unit. This value should be left blank for fuels that are still being used.

5.0 Monitoring Location Attribute Data

Monitoring Location Attribute Data Overview

The MONITORING LOCATION ATTRIBUTE DATA record provides a description of the physical characteristics of a specified monitoring location. Submit a MONITORING LOCATION ATTRIBUTE DATA record for each multiple or common stack defined in a monitoring plan. Also report a MONITORING LOCATION ATTRIBUTE DATA record for each unit in the monitoring plan if emissions are monitored or determined there. Do not report this record for pipes.

For multiple stack (MS) configurations, if the monitors are located on the stacks, report the height, elevation and inside cross-sectional area (CSA) information for each stack (i.e., stack exit CSA and, if applicable, the CSA at the flow monitor location). If the monitors are located at breechings or ducts rather than on the stack, in the MONITORING LOCATION ATTRIBUTE record for each multiple stack report the stack exit height, base elevation and inside CSA information for the exhaust stack, and report the CSA at the stack exit and, if applicable, the inside CSA at the flow monitor location in the ductwork.

For units that are part of a common pipe (CP) or multiple (MP) configuration and use Appendix D estimation procedures for heat input, CO_2, or SO_2, report (using the appropriate Unit ID or Stack ID) the stack height, elevation and inside cross-sectional area of the stack through which emissions are discharged to the atmosphere. This can be a single unit stack or a stack serving more than one unit. If the unit emits through more than one stack, report information for the stack typically associated with higher emissions for the unit.

Monitoring Location Attribute Data XML Model

Figure 11: *Monitoring Location Attribute Data* XML Elements

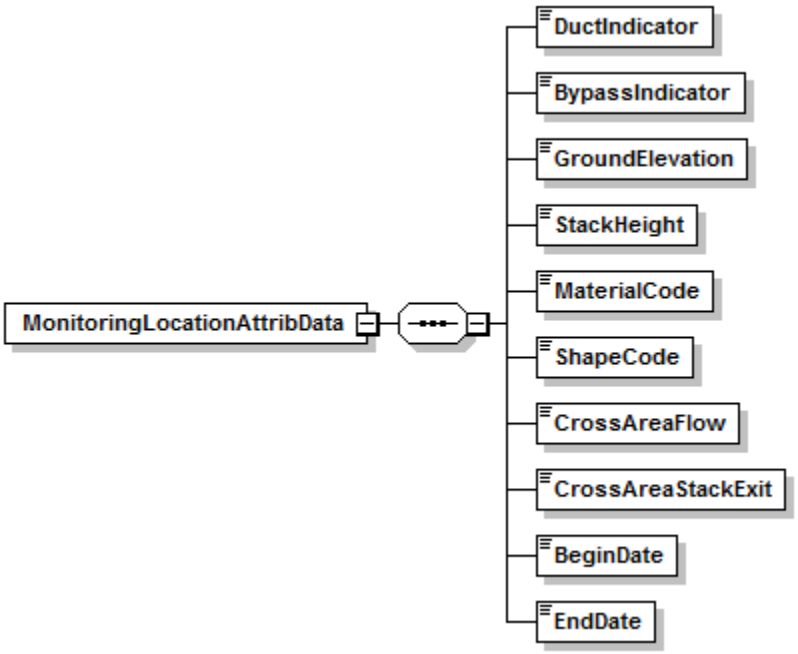

Dependencies for *Monitoring Location Attribute Data*

The MONITORING LOCATION ATTRIBUTE DATA record is dependent on the UNIT DATA record or the STACK PIPE DATA record.

No other records are dependent upon the MONITORING LOCATION ATTRIBUTE DATA record.

Monitoring Location Attribute Data XML Elements

Duct Indicator *(DuctIndicator)*
Report a "1" or a "0" indicating whether the monitoring location is a duct, with "1" meaning yes and "0" meaning no.

Bypass Indicator *(BypassIndicator)*
Report a "1" or a "0" indicating whether the monitoring location is a bypass stack, with "1" meaning yes and "0" meaning no.

Ground Elevation *(GroundElevation)*
Report the elevation of the ground level, in feet above sea level, at the base of a stack or unit.

Stack Height *(StackHeight)*
Report the height of the stack exit, in feet above ground level.

Material Code *(MaterialCode)*
If applicable (i.e., there is a stack flow monitor at this location), report a code from Table 8 that most accurately describes the material from which the inner wall of the duct or stack is constructed at the flow monitoring location:

Table 8: Duct/Stack Material Codes and Descriptions

Code	Description
BRICK	Brick and mortar
OTHER	Any material other than brick and mortar

Shape Code *(ShapeCode)*
If applicable (i.e., there is a stack flow monitor at this location), report a code from Table 9 that most accurately describes the shape of a duct or stack at the flow monitoring location:

Table 9: Duct/Stack Shape Codes and Descriptions

Code	Description
RECT	Rectangular
ROUND	Round

Cross Area Flow *(CrossAreaFlow)*
If applicable (i.e., there is a stack flow monitor at this location), report the inside cross-sectional area, in square feet, of the stack at the flow monitoring location.

Cross Area Stack Exit *(CrossAreaStackExit)*
Report the inside cross-sectional area, in square feet, of the stack at the flue exit.

Begin Date *(BeginDate)*
Report the date on which these physical characteristics first applied to the location. If this is the first or only MONITORING LOCATION ATTRIBUTE DATA record for the location, this date should equal the Active Date in the STACK PIPE DATA record (for common or multiple stacks), or the date that a unit first became subject to any applicable program (for units). If this is an updated MONITORING LOCATION ATTRIBUTE DATA record showing a change in one or more attribute value(s), this date should be the date on which the change took place.

End Date *(EndDate)*
Report the last date on which these physical characteristics applied to the location. This value should be left blank for active attribute information.

6.0 Monitoring Method Data

***Monitoring Method Data* Overview**

The MONITORING METHOD DATA record describes the emissions monitoring methodologies used at each monitoring location identified in the monitoring plan. A separate MONITORING METHOD DATA record must be included for each parameter (NOX, SO2, CO2, etc.) monitored or calculated at each identified monitoring location. For EGUs subject to the MATS rule, report the MONITORING METHOD DATA record only if compliance with an applicable Hg, HCl, HF, or SO_2 standard is demonstrated by continuously monitoring the pollutant emission rate. If MATS compliance for acid gases or HAP metals is determined by any other method (e.g., periodic stack testing, parameter monitoring, etc.), report the optional SUPPLEMENTAL MATS MONITORING METHOD DATA record instead (see section 6.1, below). Note that when heat input is not monitored at the unit level, a MONITORING METHOD DATA record for heat input must be included for both the monitoring location and at the unit level.

For example, if all emissions are monitored at a common stack for Units 1 and 2, report one set of monitor method records for the common stack location, which includes a single record for each parameter monitored, and (if heat input monitoring is required) two additional records (i.e., one each for Units 1 and 2) indicating the method by which heat input is determined at the unit level.

Report only one active method for each parameter monitored at the location. For locations with an unmonitored bypass stack, use the Bypass Approach Code field in the applicable method record(s) to report whether or not a fuel-specific default value will be used for bypass hours. For information on particular usages of this record for moisture, heat input, ARP units, NO_x program units, Hg monitoring, LME units and Alternative Monitoring System (AMS), refer to "Specific Considerations" below.

Also, for information on how to update this record, refer to the **"Updating the MONITORING METHOD DATA Record"** section below.

Monitoring Method Data XML Model

Figure 12: *Monitoring Method Data* XML Elements

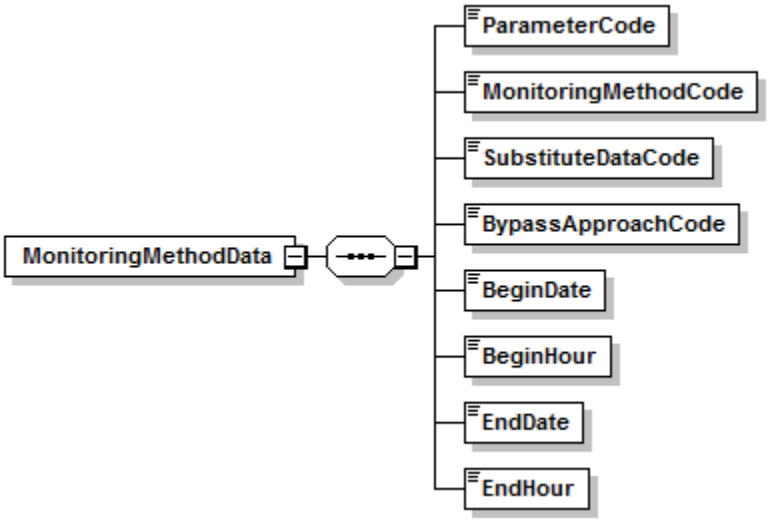

Dependencies for *Monitoring Method Data*

The MONITORING METHOD DATA record is dependent on the UNIT DATA record or the STACK PIPE DATA record.

No other records are dependent upon the MONITORING METHOD DATA record.

Monitoring Method Data XML Elements

Parameter Code *(ParameterCode)*
Report the appropriate Parameter Code as shown in Table 10:

Table 10: Parameter Codes and Descriptions for Monitoring Methods

Code	Description (Units)
CO2	CO_2 Mass Emissions Rate (tons/hr)
CO2M	CO_2 Mass Emissions (tons)
H2O	Moisture (%H_2O)
HCLRE	Electrical Output-Based HCl Emission Rate (lb/MWh)
HCLRH	Heat Input-Based HCl Emission Rate (lb/mmBtu)
HFRE	Electrical Output-Based HF Emission Rate (lb/MWh)
HFRH	Heat Input-Based HF Emission Rate (lb/mmBtu)
HGRE	Electrical Output-Based Hg Emission Rate (lb/GWh)
HGRH	Heat Input-Based Hg Emission Rate (lb/TBtu)
HI	Heat Input Rate (mmBtu/hr)

Code	Description (Units)
HIT	Heat Input Total (mmBtu) (LME only)
NOX	NO_x Mass Emissions Rate (lb/hr)
NOXM	NO_x Mass Emissions (lb) (LME only)
NOXR	NO_x Emissions Rate (lb/mmBtu)
OP	Opacity (percent)
SO2	SO_2 Mass Emissions Rate (lb/hr)
SO2M	SO_2 Mass Emissions (lb) (LME only)
SO2RE	Electrical Output-Based SO_2 Emission Rate (lb/MWh)
SO2RH	Heat Input-Based SO_2 Emission Rate (lb/mmBtu)

Monitoring Method Code *(MonitoringMethodCode)*
Report the Monitoring Method Code that identifies the methodology employed to monitor the specified parameters at the specified monitoring location. Report the appropriate uppercase code as shown in Table 11:

Table 11: Measured Parameters and Applicable Monitoring Methods

Parameter	Method Code	Description
CO2	AD	Appendix D Gas and/or Oil Flow System(s) (Formula G-4)
	AMS	Alternative Monitoring System*
	CEM	CO_2 Continuous Emission Monitor
CO2M	FSA	Fuel Sampling and Analysis (Formula G-1)
	LME	Low Mass Emissions (§75.19)
H2O	MMS	Continuous Moisture Sensor
	MDF	Moisture Default
	MTB	Moisture Lookup Table
	MWD	H_2O System with Wet and Dry O_2 Analyzers
HCLRE or HCLRH	CEM	HCl Continuous Emission Monitoring System
	CALC	Calculated from values measured at other locations. Used only for Multistack Configurations where the HCl hourly emission rate is determined at multiple stacks and then summed to the unit.
HFRE or HFRH	CEM	HF Continuous Emission Monitoring System
	CALC	Calculated from values measured at other locations. Used only for Multistack Configurations where the HF hourly emission rate is determined at multiple stacks and then summed to the unit.
HGRE	ST	Sorbent Trap Monitoring System
	CEM	Hg Continuous Emission Monitoring System (Hg CEMS)

Parameter	Method Code	Description
	CEMST	Hg CEMS and Sorbent Trap Monitoring System
	CALC	Calculated from values measured at other locations. Used only for Multistack Configurations where the HG electrical output-based hourly emission rate is determined at multiple stacks and then summed to the unit.
HGRH	ST	Sorbent Trap Monitoring System
	CEM	Hg Continuous Emission Monitoring System (Hg CEMS)
	CEMST	Hg CEMS and Sorbent Trap Monitoring System
	CALC	Calculated from values measured at other locations. Used only for Multistack Configurations where the HG heat input-based hourly emission rate is determined at multiple stacks and then summed to the unit.
HI	AD	Appendix D Gas and/or Oil Flow System(s)
	ADCALC	Appendix D Gas and/or Oil Flow System at location (unit) and different Oil or Gas Measured at Common Pipe. (Heat Input at the unit is determined by adding the appropriate value apportioned from the Common Pipe to the unit value)
	AMS	Alternative Monitoring System*
	CALC	Calculated from values measured at other locations. (Used for three situations: (1) this is the method at a unit when heat input is determined at a common stack or common pipe and then apportioned to the constituent units; or (2) this is the method at a unit when heat input is determined at multiple stacks and then summed to the unit; or (3) this is the method at a common stack if heat input is determined at the units and then summed to the common stack in order to calculate NO_x mass)
	CEM	Flow and O_2 or CO_2 Continuous Emission Monitors
	EXP	Exempt from Heat Input monitoring
HIT	LTFF	Long-Term Fuel Flow (Low Mass Emissions -- §75.19)
	LTFCALC	Long-Term Fuel Flow (Low Mass Emissions -- §75.19) at the unit and different Long Term Fuel Flow at the common pipe. (Heat Input at the unit is determined by adding the appropriate value apportioned from the Common Pipe to the unit value)
	MHHI	Maximum Rated Hourly Heat Input (Low Mass Emissions)
	CALC	Calculated from values measured at the common pipe. (This is the method at a unit when heat input is determined at a common pipe and apportioned to the constituent units)
NOX	AMS	Alternative Monitoring System*
	CEM	NO_x Concentration times Stack Flow rate
	CEMNOXR	NO_x Concentration times Stack Flow rate <u>and</u> NO_x Emission Rate times Heat Input Rate (one as a primary method and the other as secondary). ***This method is not permitted after December 31, 2007***
	NOXR	NO_x Emission Rate times Heat Input Rate

Parameter	Method Code	Description
NOXM	LME	Low Mass Emissions (§75.19)
NOXR	AMS	Alternative Monitoring System*
	AE	Appendix E
	CEM	NO_x Emission Rate CEMS
	PEM	Predictive Emissions Monitoring System (as approved by petition)
OP	COM	Continuous Opacity or Particulate Matter Monitor
	EXP	Exempted
SO2	AD	Appendix D Gas and/or Oil Flow System(s)
	AMS	Alternative Monitoring System*
	CEM	SO_2 Continuous Emission Monitoring System
	CEMF23	SO_2 Continuous Emission Monitor, and Use of F-23 Equation during hours when only very low sulfur fuel is burned per §§75.11(e) and 75.11(e)(4)
	F23	Use of F-23 Equation if only very low sulfur fuel is burned per §§75.11(e) and 75.11(e)(4)
SO2M	LME	Low Mass Emissions (§75.19)
SO2RE	CEM	SO_2 Continuous Emission Monitoring System
	CALC	Calculated from values measured at other locations. Used only for Multistack Configurations where the SO_2 electrical output-based hourly emission rate is determined at multiple stacks and then summed to the unit.
SO2RH	CEM	SO_2 Continuous Emission Monitoring System
	CALC	Calculated from values measured at other locations. Used only for Multistack Configurations where the SO_2 heat input-based hourly emission rate is determined at multiple stacks and then summed to the unit.

* Use of this method requires EPA approval

Substitute Data Code *(SubstituteDataCode)*
Report the Substitute Data Code that designates the methodology used to determine substitute values during periods of missing data. Leave this field blank when NOX Mass is calculated from NOX Rate and HI (Method Code NOXR and Parameter Code NOX). Also, leave this field blank for parameter codes OP, HGRE, HGRH, HCLRE, HCLRH, HFRE, HFRH, SO2RE, SO2RH, and all LME methods, with the following exception. When using long-term fuel flow as the heat input methodology for an LME unit, report a Substitute Data Code of MHHI only if it will ever be necessary to report the unit's maximum rated hourly heat input rate as the heat input rate for any hour. This may be necessary for either of two reasons: (1) for any hour when burning a secondary fuel that is not measured by a long-term fuel flow system, or (2) if a unit operated for only a very short period or used only a very limited amount of fuel during a quarter or reporting period, so that a tank drop measurement will not yield an accurate estimate of the fuel combusted during the reporting period. Report the appropriate uppercase code as shown in Table 12:

Table 12: Substitute Data Codes and Descriptions

Code	Description	Appropriate for Parameter Codes
FSP75	Fuel-Specific Part 75	NOXR, NOX, SO2, CO2, H2O, and HI
FSP75C	Fuel-Specific Part 75 with separate co-fired database	NOXR, NOX, SO2, CO2, H2O, and HI
MHHI	Maximum Rated Hourly Heat Input Rate for LME Units using Long Term Fuel Flow methodology	HIT
NLB	Non-Load Based	NOXR, NOX, and HI
NLBOP	Non-Load Based with Operational Bins	NOXR, NOX, and HI
OZN75	Ozone vs. Non-Ozone Season	NOX, NOXR
REV75	Reverse of Standard Part 75	H2O
SPTS	Standard Part 75	NOXR, NOX, SO2, CO2, H2O, and HI

Bypass Approach Code *(BypassApproachCode)*
Report the Bypass Approach Code used to calculate emissions for an unmonitored bypass stack whose method of determining emissions is based on a default value. The Bypass Approach Code is not required if a bypass stack is directly monitored or valid data are calculated from monitors at other locations (e.g., at a control device inlet). This code is only applicable for parameters SO2, NOX, and NOXR with CEM, CEMF23, and NOXR method codes. Report the appropriate uppercase codes as shown in Table 13:

Table 13: Bypass Approach Codes and Descriptions

Code	Description
BYMAX	MPC or MER* for Highest Emitting Fuel
BYMAXFS	Fuel-Specific MPC or MER*

***** Note that MEC or MCR may be used for documented controlled hours.

Begin Date *(BeginDate)*
Report the date on which the methodology was first used to determine emissions or heat input rate for the monitoring location. For opacity, report the same starting date as for emission reporting, whether the applicable units are exempted from opacity monitoring or not.

For new units, report the first date on which the methodology is expected to be used to determine emissions or heat input rate. Correct as needed when the actual begin date is known.

Begin Hour *(BeginHour)*
Report the hour in which the methodology was first used to determine emissions or heat input rate for the monitoring location.

End Date *(EndDate)*
Report the date on which the methodology was last used to determine emissions or heat input rate for the monitoring location. This value should be left blank for active records.

End Hour *(EndHour)*
Report the hour in which the methodology was last used to determine emissions or heat input rate for the monitoring location. This value should be left blank for active records.

Specific Considerations

Moisture
If required to correct for moisture (H_2O) when calculating emissions or heat input at a monitoring location, report a separate monitor method record for the H2O parameter. Do this for each location at which moisture is needed, defining the methodology used to determine hourly moisture for emissions calculations.

Heat Input
If heat input monitoring is required, there must be a separate monitor method record for heat input (HI) data for each unit, even if the monitor location is not at the unit level. For example, if SO_2, CO_2, NO_x, and Flow monitors are installed at CS001, which serves Unit 1, 2, and 3, there will be a full set of monitor method records for CS001 and only one monitor method record for HI at each unit. The unit records for monitor method should indicate that the heat input is calculated for the unit, using the "CALC" monitoring method code.

Acid Rain Program Units

- If a location which has an SO_2 monitor combusts both high sulfur fuel (e.g., coal or oil) and a low sulfur fuel, and uses a default SO_2 emission rate in conjunction with Equation F-23 for hours in which very low sulfur fuel is combusted (see §75.11(e)(1)), report one monitor method record for parameter SO2 with a monitoring methodology code CEMF23. If only low-sulfur fuel is combusted and the F-23 calculation is used for every hour, report the SO_2 monitoring method as F23.
- If a unit or stack is exempt from opacity monitoring, report a monitor method record for the unit or stack defining the parameter OP with a monitor method code of EXP.
- If opacity is monitored at a common stack or multiple stacks, but no other parameters are monitored at that location, do not define the stack(s). Instead, report the opacity method and system data at the unit level.
- If a unit is also subject to Subpart H, be sure to include the appropriate method record(s) indicating how NO_x mass is determined.

NO_x Program Units

- Report a monitor methodology record for parameter NOX at each applicable location.
- Report the method code as NOXR if NO_x mass emissions are calculated by determining NO_x emission rate and heat input rate. Report method code CEM if NO_x mass is calculated as the product of NO_x concentration and stack gas flow rate.
- If applicable, report methodology records for NO_x emission rate and/or heat input.

Hg Program Units (MATS Rule):

- Report a monitoring methodology record for parameter HGRE or HGRH at each applicable location where the Hg emission rate is continuously monitored.
- If you plan to install, certify and operate a backup Hg monitoring system using a different monitoring methodology other than the primary system, (e.g., where Hg CEMS is used as the primary monitoring system and a sorbent trap system is used as a redundant backup), report the combination method code (CEMST). The backup system may only be used for reporting Hg concentration during operating hours in which the primary Hg system is not available.

SO_2, HCl and HF Program Units (MATS Rule):
Report a monitoring methodology record for parameter SO2RE, SO2RH, HCLRE, HCLRH, HFRE, or HFRH (as applicable) at each location where the SO_2, HCl, or HF emission rate is continuously monitored.

Low Mass Emissions (LME) Units
For all LME units as under the methodology in §75.19:

- For Acid Rain Program LME units: Submit separate monitor methodology records for parameters SO2M, NOXM, CO2M, HIT, and, if applicable OP.
- For Non-Acid Rain LME Units: Submit monitor method records to describe the methodologies for both NO_x mass (NOXM) and heat input (HIT).

Part 75 Alternative Monitoring System (AMS)
The use of method code AMS for determining average hourly emissions for parameters CO2, HI, NOX, NOXR, or SO2 is granted through petition based on meeting the requirements of Subpart E of Part 75.

Updating the *Monitoring Method Data* Record
When changing monitoring methodologies for a parameter, report both the old and new MONITORING METHOD DATA records. First, close out the existing monitoring methodology record by entering the date and hour that the methodology was discontinued (EndDate, EndHour). Second, create a new monitoring method record for that parameter indicating the date and hour during which use of the replacement methodology began (BeginDate, BeginHour). For the new method, leave the values for End Date and End Hour blank.

(Note: For EGUs subject to the MATS rule, if CEM, ST, or CEMST is the old methodology for Hg emission rate, or if CEM is the old methodology for HCl, HF, or SO_2 emission rate and you switch to another monitoring methodology for acid gases or HAP metals (e.g., periodic stack testing), close out the existing MONITORING METHOD DATA record by entering the date and hour that the methodology was discontinued (EndDate, EndHour). Then, EPA strongly encourages you to create a new, optional SUPPLEMENTAL MATS MONITORING METHOD DATA record, as described in section 6.1.

In order to correct a previously submitted record that contains erroneous information, resubmit that MONITORING METHOD DATA record with the corrected information. For example, if the SO_2

Monitoring Method Code was previously submitted as "CEM" and the correct code should have been "CEMF23," the record should be updated and resubmitted. Note that the BeginDate and BeginHour elements should not be updated, unless the BeginDate and/or BeginHour are the elements to be corrected.

6.1 Supplemental MATS Monitoring Method Data

Supplemental MATS Monitoring Method Data Overview

When Hg, HCl, HF, or SO_2 emission rates are not continuously monitored at a particular monitoring location, EPA strongly encourages you to report the optional SUPPLEMENTAL MATS MONITORING METHOD DATA record, which describes the methods that you have chosen to comply with the acid gas and HAP metals reduction requirements of the MATS rule. The purpose of this optional record is to provide EPA with a clear picture of the overall MATS monitoring strategy for the affected EGUs and to track any changes to the monitoring strategy that occur over time. Although this is not required, it must be filled out correctly and completely if reported.

A separate SUPPLEMENTAL MATS MONITORING METHOD DATA record must be reported for each applicable parameter.

Supplemental MATS Monitoring Method Data XML Model

Figure 13: *Supplemental MATS Monitoring Method Data* XML Elements

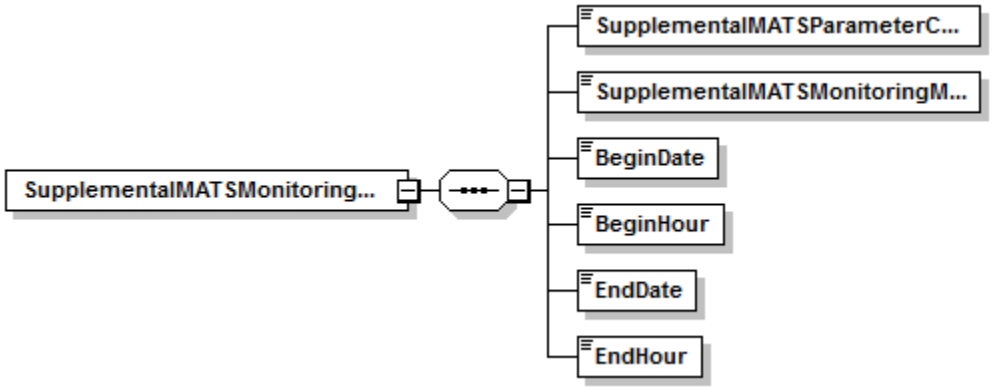

Dependencies for *Supplemental MATS Monitoring Method Data*

The SUPPLEMENTAL MATS MONITORING METHOD DATA record is dependent on the UNIT DATA record or the STACK PIPE DATA record.

No other records are dependent upon the SUPPLEMENTAL MATS MONITORING METHOD DATA record.

Supplemental MATS Monitoring Method Data XML Elements

Supplemental MATS Parameter Code *(SupplementalMATSParameterCode)*
Report the appropriate Parameter Code as shown in Table 14:

Table 14: Supplemental MATS Parameter Codes

Parameter Code	Description (Units)
HG	Mercury
HF	Hydrogen Fluoride
HCL	Hydrogen Chloride
TM	Total HAP Metals (Including Hg)
TNHGM	Total non-Hg HAP Metals
IM	Individual HAP Metals (Including Hg)
INHGM	Individual non-Hg HAP Metals
LU	Limited-Use Oil-Fired Unit

Supplemental MATS Monitoring Method Code *(SupplementalMATSMonitoringMethodCode)*
Report the uppercase Method Code in Table 15 that identifies the monitoring method employed for each applicable parameter at the monitoring location.

Table 15: Supplemental MATS Measured Parameters and Applicable Monitoring Methods

Parameters	Method Code	Description
HG (Coal and pet coke-fired EGUs and IGCCs, only)	LEE	Low Emitting EGU
HF or HCL	LEE	Low Emitting EGU
	QST	Quarterly Stack Testing
	PMO	Percent Moisture in the Oil (Oil-fired EGUs, only)
TM (Oil-fired EGUs only)	LEE	Low Emitting EGU for Total HAP metals, including Hg
	QST	Quarterly Stack Testing for Total HAP metals, including Hg
	PMQST	Quarterly Stack Testing for Particulate Matter
	PMCEMS	Particulate Matter Continuous Monitoring System
	PMCPMS	Particulate Matter Continuous Parametric Monitoring System
	CEMS	Continuous Emission Monitoring System (Requires Administrative Approval under 40 CFR 63.7(f))

Parameters	Method Code	Description
TNHGM (Coal & pet coke-fired EGUs and IGCCs, only)	LEE	Low Emitting EGU for Total non-Hg HAP metals
	QST	Quarterly Stack Testing for Total non-Hg HAP metals
	PMQST	Quarterly Stack Testing for Particulate Matter
	PMCEMS	Particulate Matter Continuous Monitoring System
	PMCPMS	Particulate Matter Continuous Parametric Monitoring System
	CEMS	Continuous Emission Monitoring System (Requires Administrative Approval under 40 CFR 63.7(f))
IM (Oil-fired EGUs, only)	LEE	Low Emitting EGU for each of the individual HAP metals, including Hg
	QST	Quarterly Stack Testing for each of the HAP metals, including Hg
	LEST	Low Emitting EGU for some of the HAP metals and Quarterly Stack Testing for the rest
	CEMS	Continuous Emission Monitoring System for the individual HAP metals (Requires Administrative Approval under 40 CFR 63.7(f))
INHGM (Coal-fired and IGCC EGUs, only)	LEE	Low Emitting EGU (for each of the non-Hg HAP metals)
	QST	Quarterly Stack Testing (for each of the non-Hg HAP metals)
	LEST	Low Emitting EGU for some of the non-Hg HAP metals and Quarterly Stack Testing for the rest
	CEMS	Continuous Emission Monitoring System for the individual non-Hg HAP metals (Requires Administrative Approval under 40 CFR 63.7(f))
LU (Oil-fired units, only)	NA	No Applicable Method

Begin Date *(BeginDate)*
Report the date on which the monitoring method is first used at the monitoring location.

For new units, report the first date on which the monitoring method is expected to be used. Correct as needed when the actual begin date is known.

Begin Hour *(BeginHour)*
Report the hour in which the monitoring method is first used at the monitoring location.

End Date *(EndDate)*
Report the date on which the monitoring method is last used at the monitoring location. Leave this field blank for active records.

End Hour *(EndHour)*
Report the hour in which the monitoring method is last used at the monitoring location. Leave this field blank for active records.

Specific Considerations

- For Hg, LEE status is available only for existing EGUs. For all other parameters, LEE status is available for both new and existing EGUs.
- For all parameters except Hg, you must obtain 3 years of performance test data showing that the emissions are < 50% of the standard to qualify for LEE status.

Updating the *Supplemental MATS Monitoring Method Data* Record

When you change the monitoring method for a parameter, report both the old and new SUPPLEMENTAL MATS MONITORING METHOD DATA records, except as described in the Note, below. First, close out the existing record by entering the date and hour that the monitoring method was discontinued (EndDate, EndHour). Second, create a new record, indicating the date and hour at which use of the replacement monitoring method began (BeginDate, BeginHour). In the new SUPPLEMENTAL MATS MONITORING METHOD DATA record, leave the values for End Date and End Hour blank.

In order to correct a previously submitted SUPPLEMENTAL MATS MONITORING METHOD DATA record that contains erroneous information, resubmit that record with the corrected information.

Note: If the new monitoring method involves continuous monitoring of the Hg, HCl, HF, or SO_2 emission rate, deactivate the SUPPLEMENTAL MATS MONITORING METHOD DATA record and create a new MONITORING METHOD DATA record to represent the change (see section 6.0, above).

7.0 Component Data

Component Data Overview

The COMPONENT DATA record describes each of the components used to make up the monitoring systems defined in the monitoring plan. A component can be either a hardware component, such as a NO_x analyzer, or a software component, such as a DAHS. Under most circumstances, only one COMPONENT DATA record is required for components that are shared by multiple monitoring systems defined at that location. For example, an O_2 monitor that is used in both the NO_x emissions rate system and the moisture monitoring system needs only to be identified in one COMPONENT DATA record. The exception exists for a combined cycle combustion unit using a "time-share" CEMS configuration to monitor emissions from both the main and bypass stacks. Please refer to "Specific Considerations" below for more information.

Information describing the monitoring system of which the component is a part is not needed for this record. The relationship between components and monitoring systems is defined by the MONITORING SYSTEM COMPONENT DATA record.

For information on defining DAHS components, how to report fuel flowmeter data when using flowmeter rotation, and how to represent manufacturer and serial number information, refer to "Specific Considerations" below.

Component Data XML Model

Figure 14: *Component Data* XML Elements

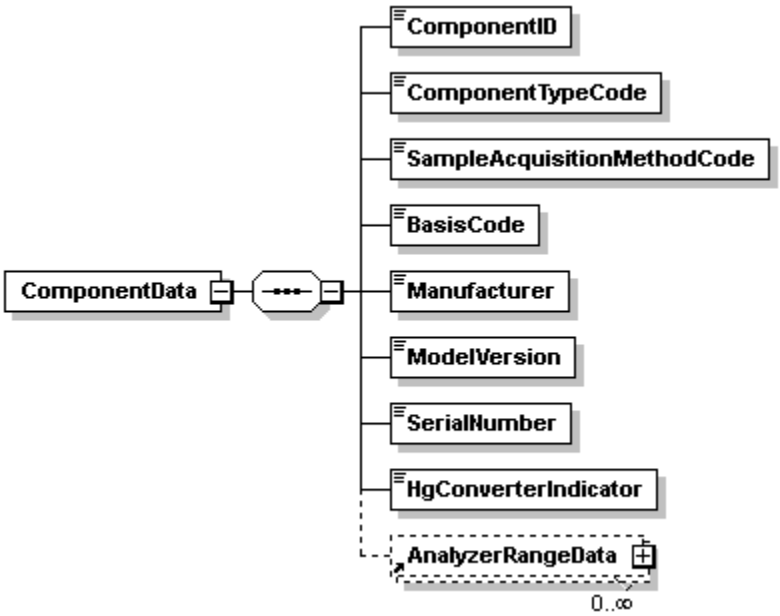

Dependencies for *Component Data*

The COMPONENT DATA record is dependent on the UNIT DATA record or the STACK PIPE DATA record.

The following records are dependent upon the COMPONENT DATA record:

- **ANALYZER RANGE DATA**
- **MONITORING SYSTEM COMPONENT DATA**

Component Data XML Elements

Component ID *(ComponentID)*
Report the three-character ID assigned to the component. This ID is assigned by a source and must be unique to a stack, pipe, or unit. For example, two different monitored units or stacks, e.g., CS1 and CS2, could each have an O_2 monitor with the same assigned Component ID of 123. However, no two components at the same monitored location (in this case, either CS1 or CS2) are allowed to have the same Component ID. For temporary like-kind analyzer replacements under §75.20(d), the component ID of the like-kind analyzer must begin with the prefix "LK" (e.g., "LK1," "LK2," etc.).

Note that components are linked to each system that the component serves using the MONITORING SYSTEM COMPONENT record. The MONITORING SYSTEM COMPONENT record includes a begin date and hour to track when a particular component is placed into service as part of the system, and an end date and hour to indicate when the component is removed or is replaced.

Do not close out primary monitoring components that are temporarily removed from service for maintenance, e.g., when a like-kind monitoring component is placed into service while the primary component is being repaired.

Also, do not close out temporary like-kind replacement analyzer ("LK") components unless a particular like-kind analyzer will never be used again at the unit or stack location. You may represent the "LK" analyzer in the monitoring plan as an active component of the primary monitoring system, for the entire useful life of the LK analyzer.

Component Type Code *(ComponentTypeCode)*
Report the code indicating the function of the component. The code does not necessarily correspond to the function of the monitoring system as a whole in which a component is included. Report the Component Type Code by using the appropriate uppercase code as shown in Table 16. (Note: For sorbent trap monitoring systems, do not include a probe (PRB) component).

Table 16: Component Type Codes and Descriptions

Code	Description
BGFF	Billing Gas Fuel Flowmeter
BOFF	Billing Oil Fuel Flowmeter

Code	Description
CALR	Calorimeter
CO2	Carbon Dioxide Concentration Analyzer
DAHS	Data Acquisition and Handling System
DL	Data Logger or Recorder
DP	Differential Pressure Transmitter/Transducer
FLC	Flow Computer
FLOW	Stack Flow Monitor
GCH	Gas Chromatograph
GFFM	Gas Fuel Flowmeter
H2O	Percent Moisture (Continuous Moisture System only)
HCL	HCl Concentration Analyzer
HF	HF Concentration Analyzer
HG	Mercury Concentration Analyzer (Hg CEMS)
MS	Mass Spectrograph
NOX	Nitrogen Oxide Concentration Analyzer
O2	Oxygen Concentration Analyzer
OFFM	Oil Fuel Flowmeter
OP	Opacity Measurement
PLC	Programmable Logic Controller
PRB	Probe
PRES	Pressure Transmitter/Transducer
SO2	Sulfur Dioxide Concentration Analyzer
STRAIN	Sorbent Trap Sampling Train Component, consisting of a sample gas flow meter and the associated sorbent trap
TANK	Oil Supply Tank
TEMP	Temperature Transmitter/Transducer

Sample Acquisition Method Code *(SampleAcquisitionMethodCode)*
Report the appropriate concentration/diluent codes, operational principle (volumetric flow codes), or type of fuel flowmeter (fuel flowmeter type codes). Leave this field blank if a sample acquisition method is not applicable to the component type (e.g., for a DAHS component). For LME long-term fuel flow components, leave this field blank unless using a certified fuel flowmeter to quantify heat input. Report the Sample Acquisition Method Code by using the appropriate uppercase codes as shown in Table17:

Table 17: Sample Acquisition Method Codes for Components

Component	Code	Description
For CEMS	DIL	Dilution
	DIN	Dilution In-Stack
	DOD	Dry Out-of-Stack Dilution
	DOU	Dilution Out-of-Stack
	EXT	Dry Extractive
	IS	In Situ
	ISP	Point/Path in Situ
	ISC	Cross Stack in Situ
	O	Other
	WXT	Wet Extractive
For Sorbent Traps	ADSP	Hg Adsorption on Sorbent Medium
For Volumetric Stack Flow Monitor	DP	Differential Pressure
	O	Other
	T	Thermal
	U	Ultrasonic
For Fuel Flowmeter Types	COR	Coriolis
	DP	Differential Pressure (e.g., Annubar)
	NOZ	Nozzle
	O	Other
	ORF	Orifice
	PDP	Positive Displacement
	T	Thermal Mass Flowmeter
	TUR	Turbine
	U	Ultrasonic
	VCON	V-Cone
	VEN	Venturi
	VTX	Vortex

Basis Code (BasisCode)
For CEM analyzer components and STRAIN components, report a code indicating whether the applicable components sample on a wet or dry basis or use both wet and dry methods. Use the appropriate uppercase codes as shown in Table18:

Table 18: Moisture Basis Codes and Descriptions for CEM Analyzer and Sorbent Trap Sampling Train Components

Code	Description*
W	Wet
D	Dry
B	Both wet and dry (O_2 only)

* For sample acquisition method (SAM) codes IS, ISP, ISC, DIN, DOU, DIL, and WXT---wet basis. For SAM code EXT---dry basis. For all stack flow monitors---wet basis. For sampling train (STRAIN) components in sorbent trap systems---dry basis. For others---check with vendor if uncertain.

Manufacturer *(Manufacturer)*
Report the name or commonly used acronym for the manufacturer or developer of the component. Do not use this field to identify the unit or location of the component. For LME long-term fuel flow components, leave this field blank unless using a certified fuel flowmeter to quantify heat input.

Model Version *(ModelVersion)*
Report the manufacturer designated model name or number of any hardware component or the version number of a software component. For LME units using long-term fuel flow, leave this field blank unless using a certified fuel flowmeter to quantify heat input.

Serial Number *(SerialNumber)*
Report the serial number for each component. For hardware or analytical components, the serial number should be unique and should allow identification of the instrument or device in the field. For flow monitors, provide a single component serial number that represents the control unit of the monitor. For fuel flow meter components, report the serial number associated with the orifice plate. Leave this field blank for LME long-term fuel flow components, unless using a certified fuel flowmeter to quantify heat input.

Hg Converter Indicator *(HgConverterIndicator)*
For Hg CEM components, report "1" if the Hg analyzer has a converter. Report "0" if it does not. Leave this field blank for all other component types.

Specific Considerations

Essential DAHS Components (Software and Hardware)
Identify the software component(s) of the Data Acquisition and Handling System (DAHS) as individual components. Any software program that calculates emissions or heat input rate, or implements missing data substitution algorithms or quarterly reporting functions should be defined as a component. Identify the programmable logic controller (PLC) or automated data logger (DL) as a system component if it performs any of those functions.

Non-Essential Software or Hardware Components
Software or hardware components that perform the following functions do not have to be identified as part of the DAHS and therefore do not need component definitions[1]:

- Calculation of RATA results;
- Calculation of flow-to-load results (that are merged with the final quarterly report); or
- Recording of operating parameters (that are merged with the final quarterly report), e.g., unit load.

Rotating Fuel Flowmeters
When fuel flowmeters are rotated among different units to facilitate the removal of meters for accuracy testing (e.g., three fuel flowmeters rotated between two units), submit a new MONITORING SYSTEM COMPONENT DATA record each time that a fuel flowmeter is being placed into service, and update the end date and hour of the MONITORING SYSTEM COMPONENT DATA record for the fuel flowmeter that is being removed. Use the reinstallation date and hour in the FUEL FLOWMETER ACCURACY DATA record as the begin date and hour in the new MONITORING SYSTEM COMPONENT DATA record, and use the hour prior to the reinstallation date and hour as the end date and hour in the MONITORING SYSTEM COMPONENT DATA record for the fuel flowmeter that is being removed. If the fuel flowmeter that is being placed into service had previously been installed, you may report its previously assigned component ID in the MONITORING SYSTEM COMPONENT DATA record or you may assign a new component ID.

The rotation of dilution probes should be reported in the same manner as fuel flowmeters.

Manufacturer and Serial Number Data for DAHS Components

- Use an abbreviation that clearly identifies the utility or operating company responsible for the software development if software has been developed in-house. Use the same abbreviation or name in the Manufacturer field for all units and sources using the software.
- Serial numbers are optional for DAHS software components and billing fuel flowmeters. If choosing to assign one, it must be unique to the software installation.

Time-Share CEMS on Single Unit
When using a "time-share" CEMS configuration to monitor emissions from both the main stack and bypass stack for a combined cycle combustion unit using a single monitoring location, define separate systems with unique Monitoring System IDs for each effluent point, and define separate component records with unique Component IDs for each system. Defining separate components for each system will allow for the tracking of component specific tests (e.g., linearity, seven day calibration, online offline calibration, and cycle time) where the test cannot be otherwise uniquely identified. (This is a distinct change from the previous EDR format, where it was acceptable to include the same component in both systems, since the Monitoring System ID used to be included in the test record.) If the same component was previously reported in both

[1] While these components do not have to be identified in the monitoring plan, identify them in the data flow diagram under § 75.53(c)(5)(iii) and/or the quality assurance plan under Appendix B to Part 75.

systems, EPA recommends that affected units define new component records only for the system that represents the monitoring of the bypass stack, so as to minimize the amount of data that would need to be resubmitted. The most recent component specific QA test data (previously submitted under the old format) will need to be resubmitted under the new Component IDs.

Manufacturer, Model, and Serial Number for STRAIN components

When reporting the Manufacturer, Model Number, or Serial Number for STRAIN components, report the Sample Gas Flow Meter manufacturer, model number, and serial number. Do not report the numbers, etc. associated with the sorbent traps or other associated hardware.

7.1 Analyzer Range Data

Analyzer Range Data Overview

Submit an ANALYZER RANGE DATA record for each gas analyzer component (NO_x, Hg, HCl, HF, SO_2, CO_2, and O_2) identified in a COMPONENT DATA record of the monitoring plan. This record specifies for each component whether that component is a high scale, low scale, or autoranging component, and whether it is a dual range analyzer.

Analyzer Range Data XML Model

Figure 15: *Analyzer Range Data* XML Elements

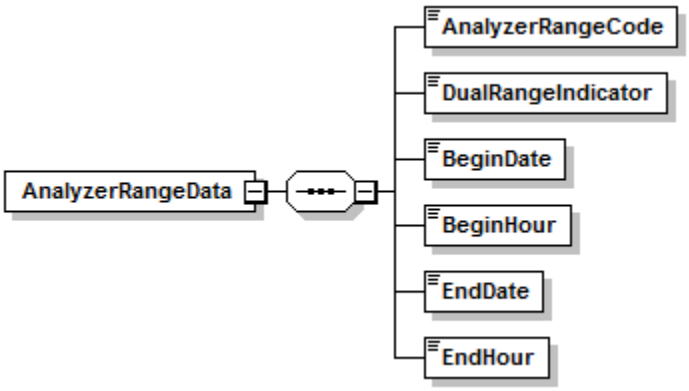

Dependencies for *Analyzer Range Data*

The ANALYZER RANGE DATA record is dependent on the COMPONENT DATA record.

No other records are dependent upon the ANALYZER RANGE DATA record.

Analyzer Range Data XML Elements

Analyzer Range Code *(AnalyzerRangeCode)*
Report the code specifying the range by using the appropriate uppercase code as shown in Table 19. If using a default high range value for SO_2 or NO_x, the correct range code for the analyzer is L. For Hg analyzers, report an analyzer code of H in all cases. There are no dual-range requirements for Hg CEMS.

Table 19: Analyzer Range Codes and Descriptions

Code	Description
H	High Range
L	Low Range
A	Auto Ranging

Dual Range Indicator *(DualRangeIndicator)*
Report a Dual Range Indicator code equal to "1" whenever a single analyzer is used to satisfy a dual range monitoring requirement. There are two possible ways to represent this in the component data:

- As two separate components in the monitoring plan (i.e., when the Analyzer Range Code is reported as "H" for the analyzer under one component ID and as "L" for the same analyzer under another unique component ID); or
- As a single auto-ranging component in the monitoring plan (i.e., Analyzer Range Code equal to "A").

Note that reporting dual range analyzers as a single auto-ranging component is recommended.

If more than one analyzer is used to satisfy a dual range monitoring requirement (i.e., when two separate analyzers are used, one for the low-range and another for the high-range), report each analyzer component separately in the monitoring plan and report "0" as the Dual Range Indicator.

Also report "0" if the component represents a single range analyzer that is not part of a dual range monitoring configuration.

Begin Date *(BeginDate)*
Report the date on which the range information reported in this record became effective. In most cases, this date will be the same as the earliest begin date in the MONITOR SYSTEM COMPONENT DATA record. However, if the analyzer range changes (e.g., from a single scale to dual range), be sure to put the proper End Date and End Hour in the existing ANALYZER RANGE DATA record and enter another ANALYZER RANGE DATA record for the new range code using the appropriate Begin Date and Hour.

Begin Hour *(BeginHour)*
Report the hour during which the range information reported in this record became effective.

End Date *(EndDate)*
Report the last date on which the range information reported in this record was effective. This value should be left blank for active records.

End Hour *(EndHour)*
Report the last hour in which the range information reported in this record was effective. This value should be left blank for active records.

8.0 Monitoring System Data

Monitoring System Data Overview

Submit a MONITORING SYSTEM DATA record to define each monitoring system that is installed (or will be installed) at each monitoring location in the monitoring plan. For continuous emission monitoring methodologies, a monitoring system is any combination of analytical components, sensors, and data software components for which a relative accuracy test is required (i.e., SO_2 concentration system, Hg CEMS, HCl CEMS, HF CEMS, sorbent trap monitoring system, flow rate system, NO_x diluent system, NO_x concentration system, O_2 concentration system, CO_2 concentration system, or moisture system, as applicable). For monitoring methodologies based on fuel flow metering, a monitoring system consists of the fuel flowmeter component(s) and the software component(s) needed to calculate and report hourly fuel flow for a unit or common pipe for a particular fuel. See the "Specific Considerations" section below for more detailed information about system types.

Information describing the monitoring system's individual components is not needed for this record. The relationship between COMPONENT DATA and MONITORING SYSTEM DATA is defined in the MONITORING SYSTEM COMPONENT DATA record.

Monitoring System Data XML Model

Figure 16: *Monitoring System Data* XML Elements

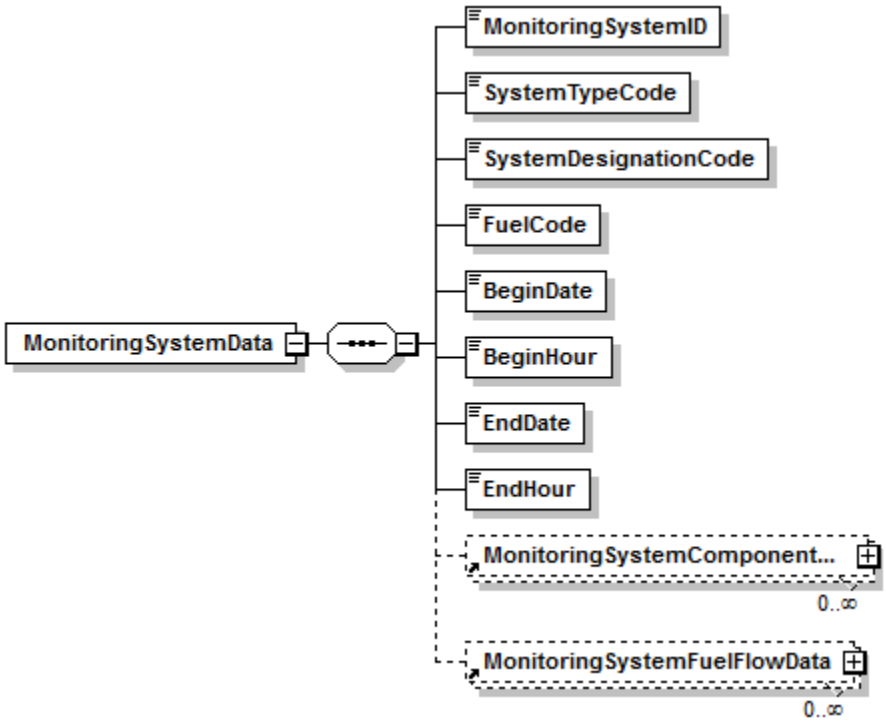

Dependencies for *Monitoring System Data*

The MONITORING SYSTEM DATA record is dependent on the UNIT DATA record or the STACK PIPE DATA record.

The following records are dependent upon the MONITORING SYSTEM DATA record:

- **MONITORING SYSTEM COMPONENT DATA**
- **MONITORING SYSTEM FUEL FLOW DATA**

Monitoring System Data XML Elements

Monitoring System ID *(MonitoringSystemID)*
Assign unique three-character alphanumeric IDs to each monitoring system at a stack, pipe, or unit. Do not repeat a system ID for a given stack, pipe, or unit, and do not re-use the ID number of a system that has been permanently removed from service. However, the same system numbering scheme may be used for different units, stacks, or pipes at the same facility.

System Type Code *(SystemTypeCode)*
Report the code that indicates the type of system by using the appropriate uppercase codes as shown in Table 20:

Table 20: System Type Codes and Descriptions

Code	Description
CO2	CO_2 Concentration System
FLOW	Stack Flow System
GAS	Gas Fuel Flow System
H2O	Moisture System that uses wet and dry O_2 analyzers
H2OM	Moisture System that uses a continuous moisture sensor
H2OT	Moisture System that uses a temperature sensor and a table of lookup values
HCL	HCl Concentration CEMS
HF	HF Concentration CEMS
HG	Hg Concentration CEMS
LTGS	Long Term Gas Fuel Flow System (LME)
LTOL	Long Term Oil Fuel Flow System (LME)
NOX	NO_x Emission Rate System
NOXC	NO_x Concentration System
NOXE	Appendix E NO_x System
NOXP	NO_x Emission Rate PEMS System
O2	O_2 Concentration System

Code	Description
OILM	Mass of Oil Fuel Flow System
OILV	Volumetric Oil Fuel Flow System
OP	Opacity (ARP only)
PM	Particulate Matter Monitoring System
SO2	SO_2 Concentration System
ST	Sorbent Trap Monitoring System

System Designation Code *(SystemDesignationCode)*
Report one of the following uppercase codes indicating the designation of the monitoring system.

Table 21: System Designation Codes and Descriptions

Code	Description
P	Primary
PB	Primary Bypass-- a monitoring system located on a bypass stack before a heat recovery steam generator (HRSG)[1]
RB	Redundant Backup-- a redundant backup (RB) monitoring system is operated and maintained by meeting all of the same program QA/QC requirements as a primary system
B	Non-Redundant Backup-- a "cold" backup or portable monitoring system, having its own probe, sample interface, and analytical components
DB	Data Backup-- a system comprised of the analytical components contained in the primary monitoring system (or in a redundant backup system), but includes a backup DAHS component
RM	Reference Method Backup-- a monitoring system that is operated as a reference method pursuant to the requirements of Appendix A to Part 60
CI[2]	Certified Monitoring System at the Inlet to an Emission Control Device

[1] Use code "P" for the monitoring system located on the main HRSG stack.

[2] Use code "CI" <u>only</u> for units with add-on SO_2, or NO_x emission controls. Specifically, the use of a "CI" monitoring system is limited to the following circumstances:

- If the unit has an exhaust configuration consisting of a monitored main stack and an unmonitored bypass stack, and you elect to report SO_2 data from a certified monitoring system located at the control device inlet (in lieu of reporting maximum potential concentration) during hours in which the flue gases are routed through the bypass stack; or
- If the outlet SO_2, or NO_x monitor is unavailable and proper operation of the add-on emission controls is not verified, and you elect to report data from a certified SO_2, or NO_x monitor at the control device inlet in lieu of reporting MPC or MER values. However, note that for the purposes of reporting NO_x emission rate, this option may only be used if the inlet NO_x monitor is paired with a diluent monitor and represented as a NO_x-diluent monitoring system in the Component record.

Fuel Code *(FuelCode)*
For Appendix D fuel flowmeter systems and Appendix E NO_x systems, report the type of fuel measured by the system by using the appropriate uppercase codes as shown in Table 22. For all other systems, report the Fuel Code as "NFS" (Non Fuel-Specific).

Table 22: Monitoring System Fuel Codes and Descriptions

Code	Description
BFG	Blast Furnace Gas
BUT	Butane Gas
CDG	Coal Derived Gas
COG	Coke Oven Gas
DGG	Digester Gas
DSL	Diesel Oil
LFG	Landfill Gas
LPG	Liquefied Petroleum Gas (if measured as a gas)
MIX	Mixture of oil/gas fuel types (for NOXE system for co-fired curve only)
NFS	Non-Fuel-Specific for all CEMS (including H_2O), Sorbent Trap Monitoring Systems, and Opacity Systems
NNG	Natural Gas
OGS	Other Gas
OIL	Residual Oil
OOL	Other Oil
PDG	Producer Gas
PNG	Pipeline Natural Gas (as defined in §72.2)
PRG	Process Gas
PRP	Propane Gas
RFG	Refinery Gas
SRG	Unrefined Sour Gas

Begin Date *(BeginDate)*
Report the date on which the system became responsible for reporting emissions data. Under most circumstances, this date should be the actual date when the system first reported emissions data. However, if this is a primary monitoring system associated with the use of a new methodology, this date should be the same as the BeginDate of the associated Monitor Method record.

This date may be later than the dates of any initial certification tests performed on the system or related components.

Begin Hour *(BeginHour)*
Report the hour on which the system became responsible for reporting emissions data.

End Date *(EndDate)*
Report the date the system was last used if a system is retired or permanently deactivated. Do not submit emissions data using this monitoring system ID after this date. This value should be left blank for active records.

End Hour *(EndHour)*
If the system is retired or permanently deactivated, report the hour during which the system was last used. Do not submit emissions data using this monitoring system ID after this time. This value should be left blank for active records.

Specific Considerations

Characteristics of Monitoring Systems

- Monitoring systems are generally comprised of the actual, physical components that are installed or will be installed for a unit, pipe, or stack where the measurement equipment is installed. Each monitoring system either directly measures a specific emissions parameter (for example, NO_x emission rate) or provides a parameter necessary for calculating emissions (for example, pollutant concentration, stack flow, moisture, or mass oil flow). A monitoring system can include both hardware and software components.
- CEM Systems must include the probe component in addition to the analyzer(s) and DAHS software.

Types of Systems Which May Be Defined and Used

- CO_2 or O_2 System. A CO_2 monitoring system may be used to: (1) measure percent CO_2 to determine CO_2 mass emissions; or (2) determine hourly heat input rate (in conjunction with a flow monitoring system). O_2 monitoring systems are only used for determining hourly heat input rate. A CO_2 or O_2 system is comprised of a CO_2 or O_2 analyzer and a DAHS software component. When using Equation F-14A or F-14B to convert a measured O_2 value to CO_2 for purposes of determining hourly CO_2 mass emissions, define a CO_2 monitoring system containing an O_2 component and DAHS software. A probe component must be added to the system when the sample acquisition method of the CO_2 or O_2 System is either dilution (DIL), dilution in-stack (DIN), dilution out-of-stack (DOU), dry extractive (EXT), or wet extractive (WXT).
- Flow Monitoring System. This monitoring system is used to measure stack flow rate in standard cubic feet per hour (scfh). The flow rate is used to calculate heat input rate and/or SO_2, CO_2, and/or NO_x mass emissions. At a minimum, the system is comprised of a flow monitor and DAHS software. For flow monitors, identify a single component as representative of the control unit of the monitor. If the average of two or more flow monitors will be used to determine the hourly flow value, identify each separate flow monitor as a component in the flow monitoring system.

- Gas Fuel Flow System. This monitoring system measures gas flow rate in 100 standard cubic feet per hour. Gas flow rate is used to calculate SO_2 and CO_2 mass emissions and/or heat input rate. At a minimum, this system is comprised of a gas fuel flowmeter and DAHS software.

- Moisture System. This system is used to measure hourly percent moisture for the calculation of hourly heat input rate, NO_x emission rate, NO_x mass emissions, CO_2 mass emissions, or SO_2 mass emissions, if an hourly moisture adjustment is required because component monitors use different moisture bases. A moisture system may be comprised of a moisture sensor and DAHS software or one or more dry and wet basis oxygen analyzers and DAHS software. One of these oxygen analyzers may also be a component of the NO_x-diluent system described below. For units with saturated gas streams (e.g., following a wet scrubber, it is also possible to use a moisture system comprised of a temperature sensor and a moisture look-up table. This type of system is represented by a single DAHS software component (note that this is the same DAHS component that is listed as a component of the other monitoring systems at the unit or stack).

- Long Term Gas or Oil Fuel Flow System. These monitoring systems are for low mass emissions (LME) units only. They measure fuel flow on a long term (non-hourly) basis, for the purpose of quantifying unit heat input. The systems are comprised of DAHS software components and, depending on the methodology selected, may also include Appendix D or billing fuel flowmeters or other relevant components. These systems are used in conjunction with default or unit-specific, fuel-specific emission rates to determine SO_2, NO_x, and CO_2 mass emissions for LME units (see §75.19(c)(3)(ii)).

- NO_x-Diluent System. This monitoring system is used to determine NO_x emission rate in lb/mmBtu. It is comprised of a NO_x concentration monitor, a CO_2 or O_2 diluent monitor, and DAHS software. A probe component must be added to the system when the sample acquisition method of the NO_x-Diluent System is either dilution (DIL), dilution in-stack (DIN), dilution out-of-stack (DOU), dry extractive (EXT), or wet extractive (WXT).

- Appendix E NO_x System (NOXE). This monitoring system is used to determine NO_x emission rate in lb/mmBtu based on a NO_x/heat input rate correlation curve derived from emission testing. Each NOXE system represents a single correlation curve (either for a single fuel or for a consistent mixture of fuels) and is comprised of the DAHS software component. Appendix E systems are associated with a unit, not with multiple or common stacks.

- NO_x Concentration System. This monitoring system is used to determine NO_x concentration, and is used in conjunction with a separately certified flow monitoring system to calculate NO_x mass emission rate (lb/hr). It is comprised of a NO_x concentration monitor and DAHS software. A probe component must be added to the system when the sample acquisition method of the NO_x Concentration System is either dilution (DIL), dilution in-stack (DIN), dilution out-of-stack (DOU), dry extractive (EXT), or wet extractive (WXT).

- NO_x Predictive Emissions Monitoring System. This type of monitoring system must be approved by petition under §75.66 and Subpart E of Part 75. It is used to determine NO_x emission rate for a gas or oil-fired turbine or boiler and is comprised only of a DAHS software component (or components).

- Volumetric Oil Fuel Flow System. This monitoring system measures hourly volumetric oil flow rate. Oil flow rate is used to calculate SO_2 and CO_2 mass emissions and/or heat input rate. At a minimum, it is comprised of an oil fuel flowmeter and DAHS software.
- Mass Oil Fuel Flow System. This monitoring system measures hourly mass of oil combusted in pounds per hour. Oil flow rate is used to calculate SO_2 or CO_2 mass emissions and/or heat input rate. At a minimum, it is comprised of an oil fuel flowmeter and DAHS software.
- Opacity System. This monitoring system is used to determine the opacity of emissions. It is comprised of a continuous opacity monitor (COM) and DAHS software.
- Particulate Matter Monitoring System. This monitoring system is used to continuously monitor particulate emissions. Affected units with a particulate monitoring system are exempt from opacity monitoring under Part 75.
- SO_2 Concentration System. This monitoring system is used to measure SO_2 concentration. It is used in conjunction with a flow monitoring system to determine hourly SO_2 mass emission rates in lb/hr. The system consists of an SO_2 concentration monitor and a DAHS software component. A probe component must be added to the system when the sample acquisition method of the SO_2 Concentration System is either dilution (DIL), dilution in-stack (DIN), dilution out-of-stack (DOU), dry extractive (EXT), or wet extractive (WXT).
- Hg Concentration System. This monitoring system is used to measure hourly Hg concentration in units of μg/scm. It is used in conjunction with auxiliary measurements (i.e., stack gas flow rate, diluent gas concentration, stack gas moisture content, electrical output, as applicable) to determine hourly Hg mass emission rates in units of lb/TBtu or lb/GWh. The monitoring system consists of a Hg pollutant concentration monitor, and a DAHS software component. A probe component must be added to the system when the sample acquisition method of the Hg Concentration System is either dilution (DIL), dilution in-stack (DIN), dilution out-of-stack (DOU), dry extractive (EXT), or wet extractive (WXT).
- Sorbent Trap Monitoring System. This monitoring system is used to determine Hg concentration in units of μg/dscm. Paired sampling trains are used to collect vapor phase Hg over a discrete period of time (up to 14 operating days), using sorbent traps that contain a suitable adsorbing medium (e.g., halogenated carbon). The total volume of dry gas sampled by each train during the collection period is measured. After the traps are removed from service, they are analyzed to determine the mass of Hg collected. The Hg mass collected by each train is used together with the dry gas sample volume to determine an Hg concentration value. Generally speaking, the two Hg concentrations are averaged, and the average value is assigned to each operating hour of the sampling period. This average concentration is used in conjunction with auxiliary measurements (i.e., stack gas flow rate, diluent gas concentration, stack gas moisture content, electrical output, as applicable) to determine hourly Hg mass emission rates in units of lb/TBtu or lb/GWh. The monitoring system consists of two sampling train components (each one representing a sorbent trap and the associated sample gas flow meter) and a DAHS component.
- HCl Concentration System. This monitoring system is used to measure hourly HCl concentration in units of ppm. It is used in conjunction with auxiliary measurements

(i.e., stack gas flow rate, diluent gas concentration, stack gas moisture content, electrical output, as applicable) to determine hourly HCl mass emission rates in units of lb/mmBtu or lb/MWh. The monitoring system consists of a HCl pollutant concentration monitor, and a DAHS software component. A probe component must be added to the system when the sample acquisition method of the HCl Concentration System is either dilution (DIL), dilution in-stack (DIN), dilution out-of-stack (DOU), dry extractive (EXT), or wet extractive (WXT).

- HF Concentration System. This monitoring system is used to measure hourly HF concentration in units of ppm. It is used in conjunction with auxiliary measurements (i.e., stack gas flow rate, diluent gas concentration, stack gas moisture content, electrical output, as applicable) to determine hourly HF mass emission rates in units of lb/mmBtu or lb/MWh. The monitoring system consists of a HF pollutant concentration monitor, and a DAHS software component. A probe component must be added to the system when the sample acquisition method of the HF Concentration System is either dilution (DIL), dilution in-stack (DIN), dilution out-of-stack (DOU), dry extractive (EXT), or wet extractive (WXT).

OILM, OILV, and GAS Systems

- If different types of oil or gas are burned in one unit, define a separate oil or gas system for each type of fuel combusted in the unit.
- Each oil or gas system must include at least one fuel flowmeter hardware component. Each oil and gas system must also include a DAHS component to record and calculate fuel flow and heat input and to perform missing data substitutions.
- The oil or gas system for the unit or common pipe must include all fuel flowmeters that are necessary to determine net fuel flow for one type of fuel. For example, if net oil flow is measured by using one flowmeter for the main fuel line to the unit and subtracting the value measured by the flowmeter on the return fuel line, the system must include both the main and return flowmeters as separate components of the same system. If more than one pipe supplies the same type of fuel to a unit and separate fuel flowmeters are installed on each of the pipes (e.g., for a combined cycle turbine with a duct burner), all the flowmeters measuring that one fuel are considered separate components of the same system.

Low Mass Emissions Units (LMEs)

- For low mass emissions units reporting under §75.19, do not define monitoring systems, and do not report this record unless long term fuel flow monitoring systems are used to measure fuel flow and heat input.
- For a group of oil or gas-fired LME units served by a common pipe (or supply tank), define a LTOL or LTGS monitoring system for the pipe or tank. In both cases (i.e., for common pipe or tank), the pipe or tank ID number must begin with a "CP" prefix (e.g., CP001). If two or more common pipes or tanks of *different* fuel types supply the same group of LME units, define a separate LTOL or LTGS system for each pipe or tank. If two or more pipes or tanks supply the *same* type of fuel to a group of LME units, define a single LTOL or LTGS system.

Monitoring System Data Updates

If changes must be made to key data fields and/or a system must be redefined after that system has been certified and used to report emissions, recertification testing may be required. If it is necessary to make such changes and it is unclear what testing or other requirements may be associated with that change, consult with EPA or the applicable state agency.

8.1 Monitoring System Fuel Flow Data

Monitoring System Fuel Flow Data Overview

The MONITORING SYSTEM FUEL FLOW DATA record provides the maximum fuel flow rate for the system for use in missing data substitution routines. Report one MONITORING SYSTEM FUEL FLOW DATA record for each GAS, OILV, OILM, LTOL, or LTGS system defined in MONITORING SYSTEM DATA.

Monitoring System Fuel Flow Data XML Model

Figure 17: *Monitoring System Fuel Flow Data* XML Elements

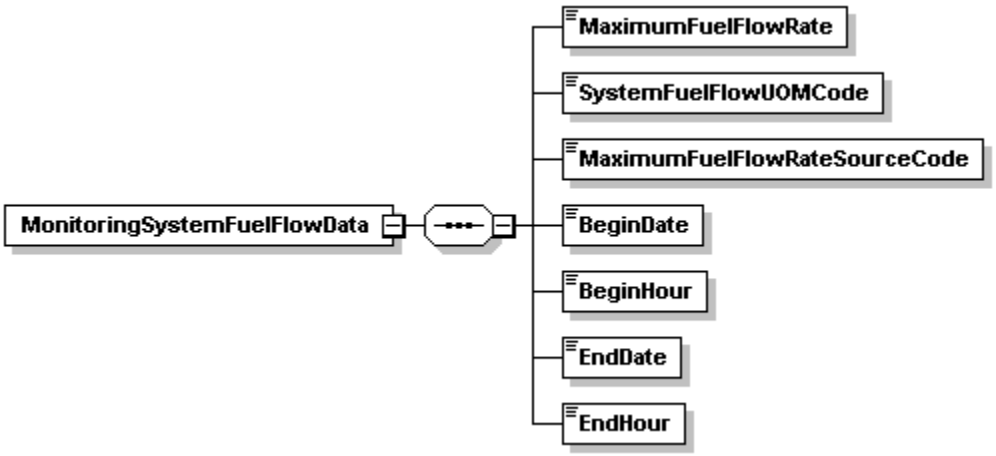

Dependencies for *Monitoring System Fuel Flow Data*

The MONITORING SYSTEM FUEL FLOW DATA record is dependent on the SYSTEM DATA record.

No other records are dependent upon the MONITORING SYSTEM FUEL FLOW DATA record.

Monitoring System Fuel Flow Data XML Elements

Maximum Fuel Flow Rate *(MaximumFuelFlowRate)*
Report the maximum fuel flow rate for the system. This maximum fuel flow rate is needed for missing data purposes. If the system is comprised of main supply and return components, calculate the net system maximum fuel flow rate assuming that the main supply is operating at the maximum potential fuel flow rate, as defined in Section 2.4.2.1 of Appendix D, and that the return flow rate is zero. For a combined cycle turbine with a duct burner, if the fuel flowmeter system includes both the turbine and duct burner flowmeter components, report the sum of the maximum potential fuel flow rates of the component flowmeters.

System Fuel Flow UOM Code *(SystemFuelFlowUOMCode)*
Report the units of measure for fuel flow rate provided by the system using the appropriate uppercase codes as shown in Table 23:

Table 23: Units of Measure for Maximum Fuel Flow Rate Codes and Descriptions

Parameter	Code	Description
Volumetric Flow of Oil	SCFH	Standard cubic feet per hour
	GALHR	Gallons per hour
	BBLHR	Barrels per hour
	M3HR	Cubic meters per hour
Mass of Oil	LBHR	Pounds per hour
Gas Flow	HSCF	100 standard cubic feet per hour

Maximum Fuel Flow Rate Source Code *(MaximumFuelFlowRateSourceCode)*
Report either "URV" to indicate that the maximum rate is based on the upper range value, or "UMX" to indicate that the maximum rate is determined by the rate at which the unit can combust fuel.

Begin Date *(BeginDate)*
Report the date on which the monitoring system fuel flow data became effective. This will usually be the same as the begin date for the monitoring system. If there was a change to the maximum fuel flow rate, in the record for the new information report the date that the change took place.

Begin Hour *(BeginHour)*
Report the hour in which the monitoring system fuel flow data became effective.

End Date *(EndDate)*
If applicable, report the last date on which the fuel flow record was in effect. This value should be left blank for active records.

End Hour *(EndHour)*
If applicable, report the last hour in which the fuel flow record was in effect. This value should be left blank for active records.

8.2 Monitoring System Component Data

Monitoring System Component Data Overview

This record links individual monitoring components to each monitoring system in which they serve and defines the time frame for that relationship. Report a MONITORING SYSTEM COMPONENT DATA record for each system-component relationship. See the descriptions for each type of monitoring system in the instructions for the MONITORING SYSTEM DATA record for general information about what components to include in each system.

Except for primary monitoring systems containing like-kind replacement ("LK") components, a system should not contain any active components that are not in service when the system is being used to monitor and report data. For example, do not include backup DAHS software as an additional DAHS component of a primary system. If you have defined primary SO_2 system 101, consisting of a SO_2 concentration monitor (component ID S01) and a DAHS software installation (component ID D01), and you also have a second installation of that DAHS software, you should define a separate Data Backup (DB) SO_2 monitoring system.

Monitoring System Component Data XML Model

Figure 18: ***Monitoring System Component Data*** **XML Elements**

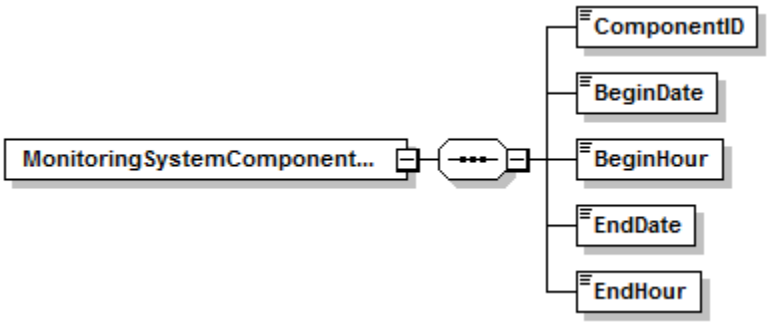

Dependencies for *Monitoring System Component Data*

The MONITORING SYSTEM COMPONENT DATA record is dependent on the MONITORING SYSTEM DATA record.

No other records are dependent upon the MONITORING SYSTEM COMPONENT DATA record.

Monitoring System Component Data XML Elements

Component ID *(ComponentID)*
Report the three-character alphanumeric ID for the component. For sorbent trap monitoring systems, define two unique sampling train component ID numbers (each one representing a sorbent trap and the associated sample gas flow meter). Report all sample gas flow rate data under these two component ID numbers-- do not change these ID numbers when the sorbent traps are changed out.

Begin Date *(BeginDate)*
Report the date on which the component became an active part of the system. If this component is an original part of the system, this date will be the same as the System Begin Date.

Begin Hour *(BeginHour)*
Report the hour in which the component became an active part of the system.

End Date *(EndDate)*
Report the last date that the component was an active part of the system. This value should be left blank for active system-component relationships.

End Hour *(EndHour)*
Report the last hour that the component was an active part of the system. This value should be left blank for active system-component relationships.

9.0 Monitoring Formula Data

Monitoring Formula Data Overview

The MONITORING FORMULA DATA record is used to identify the formulas that will be used to calculate required data from the monitoring systems defined in the MONITORING SYSTEM DATA record. It is not necessary to define formulas referencing backup monitoring systems unless the backup monitoring systems use different formulas than the primary system.

MONITORING FORMULA DATA are used for three primary purposes:

- To verify that the formulas selected are appropriate to the monitoring approach and reflect a thorough understanding of emissions calculations and the use of appropriate variables;
- To provide the basis for formula verification to ensure that the DAHS software calculates emissions and selected values accurately; and
- To verify hourly calculations in quarterly reports.

Monitoring Formula Data XML Elements

Figure 19: *Monitoring Formula Data* XML Elements

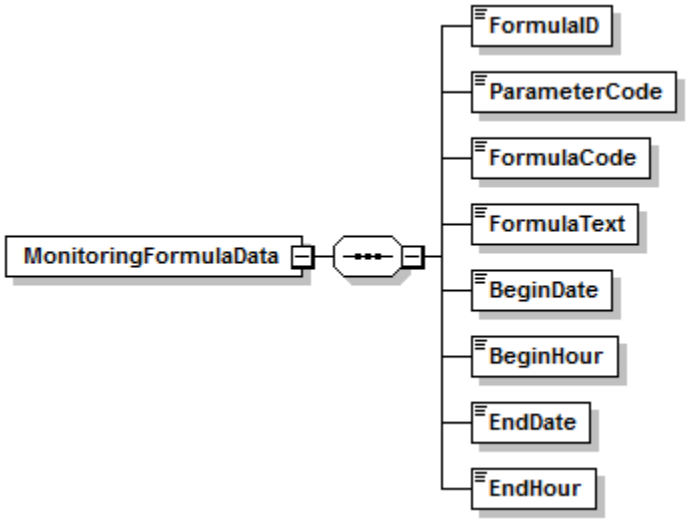

Dependencies for *Monitoring Formula Data*

The MONITORING FORMULA DATA record is dependent on the UNIT DATA record or the STACK PIPE DATA record.

No other records are dependent upon the MONITORING FORMULA DATA record.

Monitoring Formula Data XML Elements

Formula ID *(FormulaID)*
Assign a unique three-character Formula ID for each formula defined at a unit, stack, or pipe. Assign unique formula IDs across all related units and stacks, if a facility includes a common stack, pipe header, or multiple stack. Do not reuse formula IDs if changing component types (e.g., from dry extractive to wet dilution systems) and therefore changing the type of formula in use.

Parameter Code *(ParameterCode)*
Report the parameter representing the pollutant or parameter calculated by the formula by using the appropriate uppercase codes as shown in Table 24.

Table 24: Parameter Codes and Descriptions for Monitoring Formula

Code	Description
CO2	CO_2 Hourly Mass Emission Rate (tons/hr)
CO2C	CO_2 Concentration (%CO_2)
CO2M	CO_2 Daily Mass (tons)
FC	F-Factor Carbon-Based
FD	F-Factor Dry-Basis
FGAS	Gas Hourly Flow Rate (hscf)
FLOW	Net Stack Gas Volumetric Flow Rate
FOIL	Net Oil Flow Rate to Unit/Pipe
FW	F-Factor Wet-Basis
H2O	Moisture (%H_2O)
HCLRE	Electrical Output-Based HCl Emission Rate (lb/MWh)
HCLRH	Heat Input-Based HCl Emission Rate (lb/mmBtu)
HFRE	Electrical Output-Based HF Emission Rate (lb/MWh)
HFRH	Heat Input-Based HF Emission Rate (lb/mmBtu)
HGRE	Electrical Output-Based Hg Emission Rate (lb/GWh)
HGRH	Heat Input-Based Hg Emission Rate (lb/TBtu)
HI	Heat Input Rate (mmBtu/hr)
HIT	Heat Input Total (mmBtu)
NOX	NO_x Hourly Mass Emission Rate (lb/hr)
NOXR	NO_x Emission Rate (lb/mmBtu)
OILM	Oil Mass Flow Rate (lb/hr)
SO2	SO_2 Hourly Mass Emission Rate (lb/hr)
SO2R	SO_2 Emission Rate (lb/mmBtu) when Equation D-1h is used

Code	Description
SO2RE	Electrical Output-Based SO_2Emission Rate (lb/MWh)
SO2RH	Heat Input-Based SO_2 Emission Rate (lb/mmBtu)

Formula Code *(FormulaCode)*
Report the formula code of the formula that appears in the Tables below and in 40 CFR Part 75, Appendices D through G (or, if appropriate, in 40 CFR Part 60, Appendix A, Method 19 or in the MATS Rule) that is applicable to the parameter and the types of monitoring components. EPA relies on the accuracy of the formula code to verify hourly emissions calculations. The Tables provide summaries of the primary formulas used to calculate SO_2, NO_x, CO_2, Hg, HCl, and HF emissions, moisture, and heat input rate. For moisture monitoring systems comprised of wet and dry oxygen analyzers, see Table 38, Equations F-31 and M-1K. For net fuel flow and average stack flow formulas, see Table 45. All formula codes must be entered exactly as they are presented in Table 25 through Table 45. This includes the use of dashes and capital letters.

For example, report "F-1" (from Table 27) if using the equation for converting measurements of SO_2 concentration and flow rate on a wet basis to SO_2 in lb/hr. Report "19-1" (from Table 31) if you are using Equation 19-1 from Method 19, Appendix A, 40 CFR Part 60 to convert measurements of NO_x concentration and O_2 diluent on a dry basis to NO_x emission rate in lb/mmBtu. In the second example, formula code "F-5" could have been used instead of "19-1" since Equation 19-1 in Method 19 is identical to Equation F-5 in Appendix F to Part 75.

For heat input-based Hg, HCl, HF, and SO_2 emission rates (parameters HGRH, HCLRH, HFRH, and SO2RH), report the formula code for the Method 19 equation used to convert Hg, HCl, HF, or SO_2 concentration from units of lb/scf to lb/mmBtu.

For electrical output-based Hg, HCl, HF, and SO_2 emission rates (parameters HGRE, HCLRE, HFRE, and SO2RE), report the formula code that is used to calculate the Hg, HCl, HF, or SO_2 emission rate in lb/hr. That is:

- For Hg, report either Equation A-2 or A-3 (from Appendix A of 40 CFR Part 63, Subpart UUUUU);
- For HCl, report either Equation HC-2 or HC-3;
- For HF, report either Equation HF-2 or HF-3; and
- For SO_2, report either Equation S-2 or S-3.

For Hg, do not report the formula code HG-1 or the formula code (i.e., A-4) for the Appendix A equation used to convert lb/hr to lb/GWh. For HCl, HF, and SO_2, do not report the formula code for the equation used to convert lb/hr to lb/MWh, i.e., formula code HC-4, HF-4, or S-4, as applicable.

For MATS parameters (HGRE, HGRH, HCLRE, HCLRH, HFRE, HFRH, SO2RE, and SO2RH) which are monitored at multiple stacks with the rate summed to the unit, report formula code MS-1.

$$E_h = \frac{\sum_{i=1}^{n} (ER)_i \, (Q)_i}{\sum_{i=1}^{n} (Q)_i}$$

(Equation MS-1)

Where:

E_h	=	Flow-weighted hourly average pollutant emission rate for the EGU (lb/mmBtu, lb/TBtu, lb/MWh, or lb/GWh, as appropriate)
ER	=	Hourly average pollutant emission rate measured in the monitored stack or duct (lb/mmBtu, lb/TBtu, lb/MWh, or lb/GWh, as appropriate)
Q	=	Hourly stack gas flow rate measured in the monitored stack or duct (scfh, wet basis)
i	=	Designation for a particular stack or duct
n	=	Total number of monitored stacks or ducts

For MATS-affected units with a multiple-stack or duct configuration that are subject to an electrical output-based standard, use equation MS-2 to apportion the unit load to each stack or duct.

$$L_i = L_u \left[\frac{Q_i t_i}{\sum_{i=1}^{n} Q_i t_i} \right]$$

(Equation MS-2)

Where:

L_i	=	Hourly flow rate-apportioned load for the stack or duct (MW)
L_u	=	Hourly unit load (MW)
Q_i	=	Hourly average stack gas flow rate through the stack or duct (scfh)
t_i	=	Stack (or duct) operating time
i	=	Designation or a particular stack or duct
n	=	Total number of monitored stacks or ducts

For custom or non-standard intermediate equations that are not listed in Table 25 through Table 45 below, leave the Formula Code blank.

Table 25: F-Factor* Reference Table

Option 1: Fuel-Based Constants				
Fuel		**F-Factor (dscf/ mmBtu)**	**F_c-Factor (scf CO_2/ mmBtu)**	**F_w-Factor (wscf/mmBtu)**
Coal	Anthracite	10,100	1,970	10,540
	Bituminous	9,780	1,800	10,640
	Sub-bituminous	9,820	1,840	------
	Lignite	9,860	1,910	11,950
	Petroleum Coke	9,830	1,850	------
	Tire-Derived Fuel	10,260	1,800	------
Gas	Natural Gas	8,710	1,040	10,610
	Propane	8,710	1,190	10,200
	Butane	8,710	1,250	10,390
Oil	Oil	9,190	1,420	10,320
Waste	Municipal Solid Waste	9,570	1,820	------
Wood	Bark	9,600	1,920	------
	Wood Residue	9,240	1,830	------

Option 2: Calculated F-Factors			
Code	**Para-meter**	**Formula**	**Where:**
F-7A	FD	$F = \frac{3.64(\%H) + 1.53(\%C) + 0.57(\%S) + 0.14(\%N) - 0.46(\%O)}{GCV} x\ 10^6$	F = Dry-basis F-factor (dscf/mmBtu) F_c = Carbon-based F-factor (scf CO_2/mmBtu) F_w = Wet-basis F-factor (wscf/mmBtu) %H,%N, %S, %C, %O,%H_2O = Content of element, percent by weight, as determined on the same basis as the gross calorific value by ultimate analysis of the fuel combusted using ASTM D3176-89 for solid fuels, ASTM D1945-91 or ASTM D1946-90 for gaseous fuels, as applicable GCV = Gross calorific value (Btu/lb) of fuel combusted determined by ASTM D2015-91 for solid and liquid fuels or ASTM D1826-88 for gaseous fuels, as applicable GCV_w = Calorific value (Btu/lb) of fuel combusted, wet basis
F-7B	FC	$F_c = \frac{321\ x\ 10^3\ x\ (\%C)}{GCV}$	
19-14	FW	$F_w = \frac{5.57(\%H) + 1.53(\%C) + 0.57(\%S) + 0.14(\%N) - 0.46(\%O) + 0.21(\%\ H_2O)}{GCV_w} x\ 10^6$	
F-8**	FD, FC, or FW	$F = \sum_{i=1}^{n} X_i F_i$	F = Dry-basis F-factor (dscf/mmBtu) F_c = Carbon-based F-factor (scf CO_2/mmBtu) n = Number of fuels being combusted F_i,$(F_c)_i$,$(F_w)_i$ = Applicable F, F_c, or F_w factor for each fuel type X_i = Fraction of total heat input derived from each type of fossil fuel
		$F_c = \sum_{i=1}^{n} X_i (F_c)_i$	
		$F_w = \sum_{i=1}^{n} X_i (F_w)_i$	

* F-factor is the ratio of the gas volume of all the products of combustion (less water) to the heat content of the fuel. F_c-factor is the ratio of the gas volume of the CO_2 generated to the heat content of the fuel (see Part 75, Appendix F, Section 3.3). F_w-factor is the ratio of the quantity of wet effluent gas generated by the combustion to the heat content of the fuel including free water in the fuel.

** This formula should be used for affected units that combust combinations of fossil fuels or fossil fuels and wood residue. For affected units that combust a combination of fossil and non-fossil fuels, the selected F-factor must receive state or EPA approval.

Table 26: SO_2 Formula References

Usage	Moisture Basis*	Appropriate Hourly Formulas (Part 75, Appendices D&F)
SO_2 CEMS	WET	F-1
	DRY	F-2
Default SO_2 emission rate when low sulfur fuels are burned (e.g., natural gas)		F-23 (and D-1H)
Oil Fuel Flowmeter		D-2
Gas Fuel Flowmeter		D-4 or D-5 (and D-1H)
Overall values for multiple fuel flowmeter systems		D-12

* For sample acquisition method (SAM) codes IS, ISP, ISC, DIN, DOU, DIL, and WXT = wet extractive; for EXT = dry extractive, located under component. Exceptions are possible. Check with vendor if uncertain.

Table 27: SO_2 Emissions Formulas

Code	Parameters	Formula	Where:
F-1	SO2	$E_h = K \times C_h \times Q_h$	E_h = Hourly SO_2 mass emission rate (lb/hr) K = 1.660×10^{-7} for SO_2 ((lb/scf)/ppm) C_{hp} = Hourly average SO_2 concentration (ppm (dry)) C_h = Hourly average SO_2 concentration (ppm (stack moisture basis)) Q_h and Q_{hs} = Hourly average volumetric flow rate (scfh (stack moisture basis)) $\%H_2O$ = Hourly average stack moisture content (percent by volume)
F-2	SO2	$E_h = K \times C_{hp} \times Q_{hs} \times \frac{100 - \% H_2O}{100}$	
D-1H	SO2R	$ER = \frac{2.0}{7000} \times 10^6 \times \frac{S_{total}}{GCV}$	ER = Default SO_2 emission rate for natural gas (or "other" gaseous fuel) combustion (lb/mmBtu) S_{total} = Total sulfur content of gaseous fuel (grains/100 scf) GCV = Gross calorific value of the gas (Btu/100 scf) 2.0 = Ratio of lb SO_2/lb S 7000 = Conversion of grains/100 scf to lb/ 100 scf 10^6 = Conversion of Btu to mmBtu
D-2	SO2	$SO2_{rate\text{-}oil} = 2.0 \times OIL_{rate} \times \frac{\% S_{oil}}{100.0}$	$SO_{2_{rate\text{-}oil}}$ = Hourly mass emission rate of SO_2 from combustion of oil (lb/hr) OIL_{rate} = Mass rate of oil consumed per hour during combustion (lb/hr) $\%S_{oil}$ = Percent sulfur by weight measured in oil sample 2.0 = Ratio of lb SO_2 to lb S

Code	Parameters	Formula	Where:
D-4	SO2	$SO2_{rate} = (2.0/7000) \times GAS_{rate} \times S_{gas}$	SO_{2rate} = Hourly mass rate of SO_2 from combustion of gaseous fuel (lb/hr) GAS_{rate} = Hourly metered flow rate of gaseous fuel combusted (100 scf/hr) S_{gas} = Sulfur content of gaseous fuel (grains/100 scf) 2.0 = Ratio of lb SO_2/lb S 7000 = Conversion of grains/100 scf to lb/ 100 scf
D-5	SO2	$SO2_{rate} = ER \times HI_{rate}$	SO_{2rate} = Hourly mass emission rate of SO_2 from combustion of gaseous fuel (lb/hr) ER = SO_2 emission rate from Appendix D, Section 2.3.1.1 or Appendix D, Section 2.3.2.1.1 to Part 75 (lb/mmBtu) HI_{rate} = Hourly heat input rate of a gaseous fuel, calculated using procedures in Appendix D, Section 3.4.1 to Part 75 (mmBtu/hr)
F-23	SO2	$E_h = ER \times HI$	E_h = Hourly SO_2 mass emission rate (lb/hr) ER = Applicable SO_2 default emission rate from Appendix D, Section 2.3.1.1, or Appendix D, Section 2.3.2.1.1 to Part 75 (lb/mmBtu) HI = Hourly heat input rate, determined using a certified flow monitor and diluent monitor, according to Appendix F, Section 5.2 (mmBtu/hr)
D-12*	SO2	$SO2_{rate} = \frac{\sum_{all-fuels} SO_{2rate-i}\, t_i}{t_u}$	SO_{2rate} = Hourly mass emission rate of SO_2 from combustion of all fuels (lb/hr) $SO_{2rate-i}$ = SO_2 mass emission rate for each type of gas or oil fuel combusted during the hour (lb/hr) t_i = Time each gas or oil fuel was combusted for the hour (fraction of an hour) t_u = Operating time of the unit

* This equation is a modified form of Equation D-12 as described in Appendix D, Section 3.5.1, and must be used when reporting in the XML format.

Table 28: SO_2 Emission Rate Formula Reference Table for the MATS Rule

Usage	Moisture Basis	Appropriate Hourly Formulas
SO_2 CEMS	WET	S-2 and S-4 for electrical output-based SO_2 emission limit (lb/MWh)
		19-2, 19-3, 19-4, 19-7, or 19-8 (select one) for heat input-based SO_2 emission limit (lb/mmBtu)
	DRY	S-3 and S-4 for electrical output-based SO_2 emission limit (lb/MWh)
		19-1, 19-5, 19-6, or 19-9 (select one) for heat input-based SO_2 emission limit (lb/mmBtu)

Table 29: SO_2 Emission Formulas for the MATS Rule

Code	Formula	Where:
19-1	$E = K \times C_d \times F_d \times \frac{20.9}{20.9 - \%O_{2d}}$	The conversion factor "K" is needed to convert SO_2 concentration (C_d or C_w) from ppm to lb/scf.
19-2	$E = K \times C_w \times F_w \times \frac{20.9}{20.9(1 - B_{wa}) - \%O_{2w}}$	E = Unadjusted heat input-based SO_2 emission rate (lb/mmBtu) K = 1.660×10^{-7} (lb/scf-ppm)
19-3*	$E = K \times C_w \times F_d \times \frac{20.9}{20.9 \times \left[\frac{100 - \%H_2O}{100}\right] - \%O_{2w}}$	C_d = Unadjusted SO_2 concentration (ppm, dry basis) C_w = Unadjusted SO_2 concentration (ppm, wet basis)
19-3D	$E = K \times C_w \times F_d \times \frac{20.9}{20.9 \times \left[\frac{100 - \%H_2O}{100}\right] - \%O_{2def} \times \left[\frac{100 - \%H_2O}{100}\right]}$	F_d = Dry-basis F-factor (dscf/mmBtu)
19-4*	$E = K \times \frac{(C_w \times F_d)}{(100 - \%H_2O) \div 100} \times \frac{20.9}{(20.9 - \%O_{2d})}$	F_c = Carbon-based F-factor (scf CO_2/mmBtu) F_w = Wet-basis F-factor (wscf/mmBtu)
19-5*	$E = \frac{20.9 \times K \times C_d \times F_d}{20.9 - \left[\%O_{2w} \div \left(\frac{100 - \%H_2O}{100}\right)\right]}$	B_{wa} = Moisture fraction of ambient air (default value 0.027)
19-5D	$E = K \times C_d \times F_d \times \frac{20.9}{20.9 - \%O_{2def}}$	$\%H_2O$ = Moisture content of effluent gas O_{2d} = Oxygen diluent concentration (percent of effluent gas, dry basis)
19-6	$E = K \times C_d \times F_c \times \frac{100}{\%CO_{2d}}$	O_{2w} = Oxygen diluent concentration

Code	Formula	Where:
19-7	$E = K \times C_w \times F_c \times \frac{100}{\% CO_{2_w}}$	(percent of effluent gas, wet basis) O_{2def} = Default diluent cap O_2 value (14.0 percent) CO_{2d} = Carbon dioxide diluent concentration (percent of effluent gas, dry basis) CO_{2w} = Carbon dioxide diluent concentration (percent of effluent gas, wet basis)
19-8*	$E = K \times \frac{(C_w \times F_c)}{(100 - \% H_2O) \div 100} \times \frac{100}{\% CO_{2_d}}$	
19-9*	$E = K \times C_d \times \left[\frac{100 - \% H_2O}{100}\right] \times F_c \times \frac{100}{\% CO_{2_w}}$	
S-2	$M_h = K\, C_h\, Q_h$	M_h = Hourly SO_2 mass emission rate (lb/hr) K = 1.660×10^{-7} (lb/scf-ppm) C_h = Unadjusted hourly average SO_2 concentration, dry basis (ppm) Q_h = Unadjusted hourly average volumetric flow rate (scfh) B_{ws} = Moisture fraction of the stack gas, expressed as a decimal (equal to $\%H_2O/100$)
S-3	$M_h = K\, C_h\, Q_h\, (1 - B_{ws})$	
S-4	$E_{ho} = \frac{M_h}{(MW)_h}$	E_{ho} = Unadjusted electrical output-based SO_2 emission rate (lb/MWh) M_h = Hourly SO_2 mass emission rate (lb/hr) $(MW)_h$ = Hourly gross electrical load (megawatts)

Table 30: NO_x Emission Rate Formula Reference Table

Usage	Moisture Basis			Appropriate Hourly Formulas
	NO_x	CO_2	O_2	
NO_x CEMS (CO_2 Diluent)	DRY	DRY		19-6
	DRY	WET		19-9
	WET	DRY		19-8
	WET	WET		19-7 or F-6
NO_x CEMS (O_2 Diluent)	DRY		DRY	19-1 or F-5
	DRY		WET	19-5 or 19-5D
	WET		DRY	19-4
	WET		WET	19-2, 19-3, or 19-3D
Overall Value from Multiple Appendix E Systems				E-2

Table 31: NO_x Emission Rate Formulas (lb/mmBtu)

Code	Parameter	Formula	Where:
19-1 (F-5)	NOXR	$E = K \times C_d \times F_d \times \frac{20.9}{20.9 - \%O_{2_d}}$	Formulas should be multiplied by the conversion factor "K" (if C_d or C_w is in ppm) FROM / TO / MULTIPLY BY "K" ppm NO_x / lb/scf / **K = 1.194 X 10^{-7}** E = Emission rate (lb/mmBtu) C_d = Pollutant concentration (ppm, dry basis) C_w = (Pollutant concentration ppm, wet basis) F_d = Dry-basis F-factor (dscf/mmBtu) F_c = Carbon-based F-factor (scf CO_2/mmBtu) F_w = Wet-basis F-factor (wscf/mmBtu) B_{wa} = Moisture fraction of ambient air (default value 0.027) $\%H_2O$ = Moisture content of effluent gas O_{2_d} = Oxygen diluent concentration (percent of effluent gas, dry basis) O_{2_w} = Oxygen diluent concentration (percent of effluent gas, wet basis) $O_{2_{def}}$ = Default diluent cap O_2 value (14.0 percent for boilers, 19.0 percent for combustion turbines) CO_{2_d} = Carbon dioxide diluent concentration (percent of effluent gas, dry basis) CO_{2_w} = Carbon dioxide diluent concentration (percent of effluent gas, wet basis) E_f = NO_x emission rate for the unit for a given fuel at heat input rate HI_f, lb/mmBtu HI_f = Heat input rate for the hour for a given fuel, during the fuel usage time, as determined using Equation F-19 or F-20 in Section 5.5 of Appendix F to this part, mmBtu/hr H_T = Total heat input for all fuels for the hour from Equation E-1 t_f = Fuel usage time for each fuel (rounded to the nearest fraction of an hour (in equal increments that can range from one hundredth to one quarter of an hour, at the option of the owner or operator))
19-2	NOXR	$E = K \times C_w \times F_w \times \frac{20.9}{20.9(1 - B_{wa}) - \%O_{2_w}}$	
19-3*	NOXR	$E = K \times C_w \times F_d \times \frac{20.9}{20.9 \times \left[\frac{100 - \%H_2O}{100}\right] - \%O_{2_w}}$	
19-3D*	NOXR	$E = K \times C_w \times F_d \times \frac{20.9}{20.9 \times \left[\frac{100 - \%H_2O}{100}\right] - \%O_{2_{def}} \times \left[\frac{100 - \%H_2O}{100}\right]}$	
19-4*	NOXR	$E = K \times \frac{(C_w \times F_d)}{(100 - \%H_2O) \div 100} \times \frac{20.9}{(20.9 - \%O_{2_d})}$	
19-5*	NOXR	$E = \frac{20.9 \times K \times C_d \times F_d}{20.9 - \left[\%O_{2_w} \div \left(\frac{100 - \%H_2O}{100}\right)\right]}$	
19-5D	NOXR	$E = K \times C_d \times F_d \times \frac{20.9}{20.9 - \%O_{2_{def}}}$	
19-6	NOXR	$E = K \times C_d \times F_c \times \frac{100}{\%CO_{2_d}}$	
19-7 (F-6)	NOXR	$E = K \times C_w \times F_c \times \frac{100}{\%CO_{2_w}}$	
19-8*	NOXR	$E = K \times \frac{(C_w \times F_c)}{(100 - \%H_2O) \div 100} \times \frac{100}{\%CO_{2_d}}$	
19-9*	NOXR	$E = K \times C_d \times \left[\frac{100 - \%H_2O}{100}\right] \times F_c \times \frac{100}{\%CO_{2_w}}$	
E-2	NOXR	$E_h = \frac{\sum_{f=1}^{all\ fuels} (E_f \times HI_f\, t_f)}{H_T}$	

* Note that [(100 - $\%H_2O$/100] may also represented as (1 - B_{ws}), where B_{ws} is the proportion by volume of water vapor in the stack gas stream.

Table 32: Hg Emission Formula Reference Table for the MATS Rule

Monitoring Methodology	Moisture Basis	Appropriate Hourly Formulas Part 63, Subpart UUUUU, Appendix A
Hg CEMS	WET	A-2 and A-4 for electrical output-based Hg emission limit (lb/GWh)
		19-2, 19-3, 19-4, 19-7, or 19-8 (select one) for heat input-based Hg emission limit (lb/TBtu)
	DRY	A-3 and A-4 for electrical output-based Hg emission limit (lb/GWh)
		19-1, 19-5, 19-6, or 19-9 (select one) for heat input-based Hg emission limit (lb/TBtu)
Sorbent Trap Hg Monitoring Systems	DRY	A-3 and A-4 for electrical output-based Hg emission limit (lb/GWh)
		19-1, 19-5, 19-6, or 19-9 (select one) for heat input-based Hg emission limit (lb/TBtu)

Table 33: Hg Emissions Formulas for the MATS Rule

Code	Formula	Where:
A-2	$M_h = K\ C_h\ Q_h$	M_h = Hourly Hg mass emissions rate (lb/hr) K = 6.24×10^{-11} (lb-scm/µg-scf) C_h = Hourly average, Hg concentration, wet basis (µg/scm) Q_h = Hourly unadjusted average volumetric flow rate (scfh)
A-3	$M_h = K\ C_h\ Q_h\ (1 - B_{ws})$	M_h = Hourly Hg mass emissions rate (lb/hr) K = 6.24×10^{-11} (lb-scm/µg-scf) C_h = Hourly average, Hg concentration, dry basis (µg/scm) Q_h = Hourly unadjusted average volumetric flow rate (scfh) B_{ws} = Moisture fraction of the stack gas, expressed as a decimal (equal to $\%H_2O/100$)
19-1	$E = K\ x\ C_d\ x\ F_d\ x\ \frac{20.9}{20.9 - \%O_{2_d}}$	The conversion factor "K" is needed to convert Hg concentration (C_d or C_w) from µg/scm to lb/scf. E = Hg emission rate (lb/mmBtu) K = 6.24×10^{-11} (lb-scm/ µg/scf) C_d = Hg concentration (µg/scm, dry basis) C_w = Hg concentration (µg/scm, wet basis)
19-2	$E = K\ x\ C_w\ x\ F_w\ x\ \frac{20.9}{20.9(1 - B_{wa}) - \%O_{2_w}}$	
19-3*	$E = K\ x\ C_w\ x\ F_d\ x\ \frac{20.9}{20.9\ x \left[\frac{100 - \%H_2O}{100}\right] - \%O_{2_w}}$	

Code	Formula	Where:
19-3D	$E = K \times C_w \times F_d \times \frac{20.9}{20.9 \times \left[\frac{100 - \%H_2O}{100}\right] - \%O_{2def} \times \left[\frac{100 - \%H_2O}{100}\right]}$	F_d = Dry-basis F-factor (dscf/mmBtu) F_c = Carbon-based F-factor (scf CO_2/mmBtu) F_w = Wet-basis F-factor (wscf/mmBtu) B_{wa} = Moisture fraction of ambient air (default value 0.027) $\%H_2O$ = Moisture content of effluent gas O_{2d} = Oxygen diluent concentration (percent of effluent gas, dry basis) O_{2w} = Oxygen diluent concentration (percent of effluent gas, wet basis) O_{2def} = Default diluent cap O_2 value (14.0 percent for boilers, 19.0 percent for IGCC units) CO_{2d} = Carbon dioxide diluent concentration (percent of effluent gas, dry basis) CO_{2w} = Carbon dioxide diluent concentration (percent of effluent gas, wet basis)
19-4*	$E = K \times \frac{(C_w \times F_d)}{(100 - \%H_2O) \div 100} \times \frac{20.9}{(20.9 - \%O_{2d})}$	
19-5*	$E = \frac{20.9 \times K \times C_d \times F_d}{20.9 - \left[\%O_{2w} \div \left(\frac{100 - \%H_2O}{100}\right)\right]}$	
19-5D	$E = K \times C_d \times F_d \times \frac{20.9}{20.9 - \%O_{2def}}$	
19-6	$E = K \times C_d \times F_c \times \frac{100}{\%CO_{2d}}$	
19-7	$E = K \times C_w \times F_c \times \frac{100}{\%CO_{2w}}$	
19-8*	$E = K \times \frac{(C_w \times F_c)}{(100 - \%H_2O) \div 100} \times \frac{100}{\%CO_{2d}}$	
19-9*	$E = K \times C_d \times \left[\frac{100 - \%H_2O}{100}\right] \times F_c \times \frac{100}{\%CO_{2w}}$	
A-4	$E_{ho} = \frac{M_h}{(MW)_h} \times 10^3$	E_{ho} = Electrical output based emissions rate (lb/GWh) M_h = Hourly Hg mass emissions rate (lb/hr) $(MW)_h$ = Hourly gross electrical load (megawatts) 10^3 = Conversion factor from MW to GW
HG-1	$E_f = E \times 10^6$	E_f = Hg emission rate (lb/TBtu) E = Hg emission rate (lb/mmBtu) 10^6 = Conversion factor (mmBtu/TBtu)

* Note that [(100 - $\%H_2O$/100] may also represented as (1 - B_{ws}), where B_{ws} is the proportion by volume of water vapor in the stack gas stream.

Table 34: HCl Emission Rate Formula Reference Table for the MATS Rule

Usage	Moisture Basis	Appropriate Hourly Formulas
HCl CEMS	WET	HC-2 and HC-4 for electrical output-based HCl emission limit (lb/MWh)
		19-2, 19-3, 19-4, 19-7, or 19-8 (select one) for heat input-based HCl emission limit (lb/mmBtu)
	DRY	HC-3 and HC-4 for electrical output-based HCl emission limit (lb/MWh)
		19-1, 19-5, 19-6, or 19-9 (select one) for heat input-based HCl emission limit (lb/mmBtu)

Table 35: HCl Emission Formulas for the MATS Rule

Code	Formula	Where:
19-1	$E = K \times C_d \times F_d \times \frac{20.9}{20.9 - \%O_{2_d}}$	The conversion factor "K" is needed to convert HCl concentration (C_d or C_w) from ppm to lb/scf. E = Unadjusted heat input-based SO_2 emission rate (lb/mmBtu) K = 9.43×10^{-8} (lb/scf-ppm) C_d = Unadjusted HCl concentration (ppm, dry basis) C_w = Unadjusted HCl concentration (ppm, wet basis) F_d = Dry-basis F-factor (dscf/mmBtu) F_c = Carbon-based F-factor (scf CO_2/mmBtu) F_w = Wet-basis F-factor (wscf/mmBtu) B_{wa} = Moisture fraction of ambient air (default value 0.027) $\%H_2O$ = Moisture content of effluent gas O_{2d} = Oxygen diluent concentration (percent of effluent gas, dry basis) O_{2w} = Oxygen diluent concentration (percent of effluent gas, wet basis)
19-2	$E = K \times C_w \times F_w \times \frac{20.9}{20.9(1 - B_{wa}) - \%O_{2_w}}$	
19-3*	$E = K \times C_w \times F_d \times \frac{20.9}{20.9 \times \left[\frac{100 - \%H_2O}{100}\right] - \%O_{2_w}}$	
19-3D	$E = K \times C_w \times F_d \times \frac{20.9}{20.9 \times \left[\frac{100 - \%H_2O}{100}\right] - \%O_{2_{def}} \times \left[\frac{100 - \%H_2O}{100}\right]}$	
19-4*	$E = K \times \frac{(C_w \times F_d)}{(100 - \%H_2O) \div 100} \times \frac{20.9}{(20.9 - \%O_{2_d})}$	
19-5*	$E = \frac{20.9 \times K \times C_d \times F_d}{20.9 - \left[\%O_{2_w} \div \left(\frac{100 - \%H_2O}{100}\right)\right]}$	
19-5D	$E = K \times C_d \times F_d \times \frac{20.9}{20.9 - \%O_{2_{def}}}$	
19-6	$E = K \times C_d \times F_c \times \frac{100}{\%CO_{2_d}}$	

Code	Formula	Where:
19-7	$E = K \times C_w \times F_c \times \frac{100}{\% CO_{2_w}}$	O_{2def} = Default diluent cap O_2 value (14.0 percent) CO_{2d} = Carbon dioxide diluent concentration (percent of effluent gas, dry basis) CO_{2w} = Carbon dioxide diluent concentration (percent of effluent gas, wet basis)
19-8*	$E = K \times \frac{(C_w \times F_c)}{(100 - \% H_2O) \div 100} \times \frac{100}{\% CO_{2_d}}$	
19-9*	$E = K \times C_d \times \left[\frac{100 - \% H_2O}{100}\right] \times F_c \times \frac{100}{\% CO_{2_w}}$	
HC-2	$M_h = K\, C_h\, Q_h$	M_h = Hourly HCl mass emission rate (lb/hr) K = 9.43×10^{-8} (lb/scf-ppm) C_h = Unadjusted hourly average HCl concentration, dry basis (ppm) Q_h = Unadjusted hourly average volumetric flow rate (scfh) B_{ws} = Moisture fraction of the stack gas, expressed as a decimal (equal to $\%H_2O/100$)
HC-3	$M_h = K\, C_h\, Q_h\, (1 - B_{ws})$	
HC-4	$E_{ho} = \frac{M_h}{(MW)_h}$	E_{ho} = Unadjusted electrical output-based HCl emission rate (lb/MWh) M_h = Hourly HCl mass emission rate (lb/hr) $(MW)_h$ = Hourly gross electrical load (megawatts)

Table 36: HF Emission Rate Formula Reference Table for the MATS Rule

Usage	Moisture Basis	Appropriate Hourly Formulas
HF CEMS	WET	HF-2 and HF-4 for electrical output-based HF emission limit (lb/MWh)
		19-2, 19-3, 19-4, 19-7, or 19-8 (select one) for heat input-based HF emission limit (lb/mmBtu)
	DRY	HF-3 and HF-4 for electrical output-based HF emission limit (lb/MWh)
		19-1, 19-5, 19-6, or 19-9 (select one) for heat input-based HF emission limit (lb/mmBtu)

Table 37: HF Emission Formulas for the MATS Rule

Code	Formula	Where:
19-1	$E = K \times C_d \times F_d \times \frac{20.9}{20.9 - \%O_{2_d}}$	The conversion factor "K" is needed to convert HF concentration (C_d or C_w) from ppm to lb/scf. E = Unadjusted heat input-based HF emission rate (lb/mmBtu) K = 5.18×10^{-8} (lb/scf-ppm) C_d = Unadjusted HF concentration (ppm, dry basis) C_w = Unadjusted HF concentration (ppm, wet basis) F_d = Dry-basis F-factor (dscf/mmBtu) F_c = Carbon-based F-factor (scf CO_2/mmBtu) F_w = Wet-basis F-factor (wscf/mmBtu) B_{wa} = Moisture fraction of ambient air (default value 0.027) $\%H_2O$ = Moisture content of effluent gas O_{2d} = Oxygen diluent concentration (percent of effluent gas, dry basis) O_{2w} = Oxygen diluent concentration (percent of effluent gas, wet basis) O_{2def} = Default diluent cap O_2 value (14.0 percent) CO_{2d} = Carbon dioxide diluent concentration (percent of effluent gas, dry basis) CO_{2w} = Carbon dioxide diluent concentration (percent of effluent gas, wet basis)
19-2	$E = K \times C_w \times F_w \times \frac{20.9}{20.9(1 - B_{wa}) - \%O_{2_w}}$	
19-3*	$E = K \times C_w \times F_d \times \frac{20.9}{20.9 \times \left[\frac{100 - \%H_2O}{100}\right] - \%O_{2_w}}$	
19-3D	$E = K \times C_w \times F_d \times \frac{20.9}{20.9 \times \left[\frac{100 - \%H_2O}{100}\right] - \%O_{2_{def}} \times \left[\frac{100 - \%H_2O}{100}\right]}$	
19-4*	$E = K \times \frac{(C_w \times F_d)}{(100 - \%H_2O) \div 100} \times \frac{20.9}{(20.9 - \%O_{2_d})}$	
19-5*	$E = \frac{20.9 \times K \times C_d \times F_d}{20.9 - \left[\%O_{2_w} \div \left(\frac{100 - \%H_2O}{100}\right)\right]}$	
19-5D	$E = K \times C_d \times F_d \times \frac{20.9}{20.9 - \%O_{2_{def}}}$	
19-6	$E = K \times C_d \times F_c \times \frac{100}{\%CO_{2_d}}$	
19-7	$E = K \times C_w \times F_c \times \frac{100}{\%CO_{2_w}}$	
19-8*	$E = K \times \frac{(C_w \times F_c)}{(100 - \%H_2O) \div 100} \times \frac{100}{\%CO_{2_d}}$	
19-9*	$E = K \times C_d \times \left[\frac{100 - \%H_2O}{100}\right] \times F_c \times \frac{100}{\%CO_{2_w}}$	

Code	Formula	Where:
HF-2	$M_h = K\,C_h\,Q_h$	M_h = Hourly HF mass emission rate (lb/hr) K = 5.18×10^{-8} (lb/scf-ppm) C_h = Unadjusted hourly average HF concentration, dry basis (ppm) Q_h = Unadjusted hourly average volumetric flow rate (scfh) B_{ws} = Moisture fraction of the stack gas, expressed as a decimal (equal to $\%H_2O/100$)
HF-3	$M_h = K\,C_h\,Q_h\,(1 - B_{ws})$	
HF-4	$E_{ho} = \dfrac{M_h}{(MW)_h}$	E_{ho} = Unadjusted electrical output-based HF emission rate (lb/MWh) M_h = Hourly HF mass emission rate (lb/hr) $(MW)_h$ = Hourly gross electrical load (megawatts)

Table 38: Moisture Formulas*

Code	Parameter	Formula	Where:
F-31	H2O	$\%H_2O = \dfrac{(O_{2d} - O_{2w})}{O_{2d}} x\,100$	$\%H_2O$ = Percent moisture O_{2d} = Oxygen diluent concentration (percent of effluent gas, dry basis) O_{2w} = Oxygen diluent concentration (percent of effluent gas, wet basis)
M-1K	H2O	$\%H_2O = \dfrac{(O_{2d} - O_{2w})}{O_{2d}} \times 100$, as adjusted[1]	

* Please contact the EPA Clean Air Markets Division for the assigned code for other moisture formulas.
[1] Using a K-factor or other mathematical algorithm, per Appendix A, Section 6.5.7(a).

Table 39: CO_2 Formula Reference Table

Usage	Moisture Basis	Appropriate Formulas (Part 75, Appendices F, G)
CO_2 CEMS (O_2 Analyzer)	WET	F-14B and F-11
	DRY	F-14A and F-2
CO_2 CEM (CO_2 Analyzer)	WET	F-11
	DRY	F-2
Fuel Sampling		G-1 (and possibly G-2, G-3, G-5, G-6 and G-8)

Usage	Moisture Basis	Appropriate Formulas (Part 75, Appendices F, G)
Gas or Oil Flowmeter		G-4
Overall Value from Multiple Flowmeter Systems		G-4A

Table 40: CO_2 Concentration and Mass Emission Rate Formulas

Code	Parameter	Formula	Where:
F-2	CO2	$E_h = K \times C_{hp} \times Q_{hs} \times \frac{100 - \%H_2O}{100}$	E_h = Hourly CO_2 mass emissions (tons/hr) K = 5.7 x 10^{-7} for CO_2 ((tons/scf)/percent CO_2) C_{hp} = Hourly average, CO_2 concentration (percent CO_2, dry basis) Q_{hs} = Hourly average volumetric flow rate (scfh, wet basis) $\%H_2O$ = Hourly average stack moisture content (percent by volume)
F-11	CO2	$E_h = K \times C_h \times Q_h$	E_h = Hourly CO_2 mass emission rate (tons/hr) K = 5.7x10^{-7} for CO_2 ((tons/scf)/percent CO_2) C_h = Hourly average CO_2 concentration (percent CO_2, wet basis) Q_h = Hourly average volumetric flow rate (scfh, wet basis)
F-14A	CO2C	$CO_{2d} = 100 \times \frac{F_c}{F} \times \frac{20.9 - O_{2d}}{20.9}$	CO_{2d} = Hourly average CO_2 concentration (percent by volume, dry basis) F = Dry-basis F-factor (dscf/mmBtu) F_c = Carbon-based F-factor (scf CO_2/mmBtu) 20.9 = Percentage of O_2 in ambient air O_{2d} = Hourly average O_2 concentration (percent by volume, dry basis)
F-14B	CO2C	$CO_{2w} = \frac{100}{20.9} \times \frac{F_c}{F} \times \left[20.9\left(\frac{100 - \%H_2O}{100}\right) - O_{2W} \right]$	CO_{2w} = Hourly average CO_2 concentration (percent by volume, wet basis) F = Dry-basis F-factor (dscf/mmBtu) F_c = Carbon-based F-factor (scf CO_2/mmBtu) 20.9 = Percentage of O_2 in ambient air O_{2W} = Hourly average O_2 concentration (percent by volume, wet basis) $\%H_2O$ = Moisture content of gas in the stack (percent)
G-1	CO2M	$W_{CO_2} = \frac{\left(MW_c + MW_{O_2}\right) \times W_c}{2000 MW_c}$	W_{CO_2} = CO_2 emitted from combustion (tons/day) MW_c = Molecular weight of carbon (12.0) MW_{O_2} = Molecular weight of oxygen (32.0) W_c = Carbon burned (lb/day) determined using fuel sampling and analysis and fuel feed rates*

Code	Parameter	Formula	Where:
G-2	CO2M	$W_{NCO2} = W_{CO2} - \frac{MW_{CO2}}{MW_c} \times \left(\frac{A\%}{100}\right) \times \left(\frac{C\%}{100}\right) \times W_{COAL}$	W_{NCO2} = Net CO_2 mass emissions discharged to the atmosphere (tons/day) W_{CO2} = Daily CO_2 mass emissions calculated by Equation G-1 (tons/day) MW_{CO2} = Molecular weight of carbon dioxide (44.0) MW_c = Molecular weight of carbon (12.0) A% = Ash content of the coal sample (percent by weight) C% = Carbon content of ash (percent by weight) W_{COAL} = Feed rate of coal from company records (tons/day)
G-3	CO2M	$W_{NCO2} = .99 \times W_{CO2}$	W_{NCO2} = Net CO_2 mass emissions from the combustion of coal discharged to the atmosphere (tons/day) .99 = Average fraction of coal converted into CO_2 upon combustion W_{CO2} = Daily CO_2 mass emissions from the combustion of coal calculated by Equation G-1 (tons/day)
G-4	CO2	$W_{CO_2} = \frac{F_c \times H \times U_f \times MW_{CO_2}}{2000}$	W_{CO_2} = CO_2 emitted from combustion (tons/hr) F_c = Carbon-based F-factor, 1,040 scf/mmBtu for natural gas; 1,420 scf/mmBtu for crude, residual, or distillate oil and calculated according to the procedures in Section 3.3.5 of Appendix F to Part 75 for other gaseous fuels H = Hourly heat input rate (mmBtu/hr) U_f = 1/385 scf CO_2/lb-mole at 14.7 psi and 68EF MW_{CO_2} = Molecular weight of carbon dioxide (44.0)
G-4A	CO2	$CO2_{unit} = \frac{\sum_{all-fuels} CO2_{fuel}\, t_{fuel}}{t_{unit}}$	$CO2_{unit}$ = Unit CO_2 mass emission rate (tons/hr) $CO2_{fuel}$ = CO_2 mass emission rate calculated using Equation G-4 for a single fuel (tons/hr) t_{fuel} = Fuel usage time t_{unit} = Unit operating time
G-5	CO2M	$SE_{CO_2} = W_{CaCO_3} \times F_u \times \frac{MW_{CO_2}}{MW_{CaCO_3}}$	SE_{CO_2} = CO_2 emitted from sorbent (tons/day) W_{CaCO_3} = Calcium carbonate used (tons/day) F_u = 1.00, the calcium to sulfur stoichiometric ratio MW_{CO_2} = Molecular weight of carbon dioxide (44.0) MW_{CaCO_3} = Molecular weight of calcium carbonate (100.0)

Code	Parameter	Formula	Where:
G-6	CO2M	$$SE_{CO_2} = F_u \frac{W_{SO_2}}{2000} \frac{MW_{CO2}}{MW_{SO_2}}$$	SE_{CO_2} = CO_2 emitted from sorbent (tons/day) MW_{CO_2} = Molecular weight of carbon dioxide (44.0) MW_{SO_2} = Molecular weight of sulfur dioxide (64.0) W_{SO_2} = Sulfur dioxide removed (lb/day) based on applicable procedures, methods, and equations in § 75.15 F_u = 1.00, the calcium to sulfur stoichiometric ratio
G-8	CO2M	$$W_t = W_{CO_2} + SE_{CO_2}$$	W_t = Estimated total CO_2 mass emissions (tons/day) W_{CO_2} = CO_2 emitted from fuel combustion (tons/day) SE_{CO_2} = CO_2 emitted from sorbent (tons/day)

* See Appendix G, sections 2.1.1 through 2.1.3

** For a unit linked to a common pipe with one additional fuel flowmeter system defined at the unit, report a G-4A formula to calculate the unit hourly CO_2 rate, even though there is only a single fuel flowmeter defined at the unit. Because the fuel usage time may not be equal to the unit operating time, the hourly CO_2 rate for the fuel may be different from the hourly CO_2 rate for the unit. Use formula G-4A to calculate the unit hourly CO_2 rate.

Table 41: Heat Input Formula Reference Table

Usage	Moisture Basis*	Appropriate Hourly Formulas (Part 75, Appendices D and F)
CEMS (O_2 Analyzer)	WET	F-17
	DRY	F-18
CEMS (CO_2 Analyzer)	WET	F-15
	DRY	F-16
Gas Fuel Flowmeter System		D-6 (F-20)
Oil Fuel Flowmeter System (Mass)		D-8 (F-19)
Oil Fuel Flowmeter System (Volumetric)		D-3 and D-8 (F-19) or F-19V
Overall Value from Multiple Fuel Flowmeter Systems		D-15A
Apportioned Value from Common Stack or Common Pipe		F-21A, F-21B, or F-21
Summed Value from Multiple Stacks		F-21C
Summed Value from Unit		F-25

* For sample acquisition method (SAM) codes IS, ISP, ISC, DIN, DOU, DIL, and WXT = wet extractive; for EXT = dry extractive, locate under the component. Exceptions are possible. Check with vendor if uncertain.

Table 42: Heat Input Formulas

Code	Parameter	Formula	Where:
D-15A	HI	$$HI_{rate\text{-}hr} = \frac{\sum_{all\text{-}fuels} HI_{rate\text{-}i}\, t_i}{t_u}$$	$HI_{rate\text{-}hr}$ = Heat input rate from all fuels combusted during the hour (mmBtu/hr) $HI_{rate\text{-}i}$ = Heat input rate for each type of gas or oil combusted during the hour (mmBtu/hr) t_i = Time each gas or oil fuel was combusted for the hour (fuel usage time) (fraction of an hour) t_u = Operating time of the unit
F-15	HI	$$HI = Q_w \, x \, \frac{1}{F_c} \, x \, \frac{\% CO_{2w}}{100}$$	HI = Hourly heat input rate (mmBtu/hr) Q_w, Q_h = Hourly average volumetric flow rate (scfh, wet basis) F_c = Carbon-based F-factor (scf/mmBtu)
F-16	HI	$$HI = Q_h \, x \left[\frac{100 - \% H_2O}{100 F_c} \right] \left[\frac{\% CO_{2d}}{100} \right]$$	

Code	Parameter	Formula	Where:
F-17	HI	$HI = Q_W \, x \, \frac{1}{F} \, x \, \frac{[(20.9/100)(100 - \% H_2O) - \% O_{2w}]}{20.9}$	F = Dry basis F-factor (dscf/mmBtu) $\%CO_{2w}$ = Hourly concentration of CO_2 (percent CO_2, wet basis) $\%CO_{2d}$ = Hourly concentration of CO_2 (percent CO_2, dry basis) $\%O_{2w}$ = Hourly concentration of O_2 (percent O_2, wet basis) $\%O_{2d}$ = Hourly concentration of O_2 (percent O_2, dry basis) $\%H_2O$ = Hourly average moisture of gas in the stack (percent)
F-18	HI	$HI = Q_w \, x \left[\frac{(100 - \% H_2O)}{100F} \right] \left[\frac{(20.9 - \% O_{2d})}{20.9} \right]$	
D-3	OILM	$OIL_{rate} = V_{oil\text{-}rate} \, x \, D_{oil}$	OIL_{rate} = Mass rate of oil consumed per hr (lb/hr) $V_{oil\text{-}rate}$ = Volume rate of oil consumed per hr, measured (scf/hr, gal/hr, barrels/hr, or m^3/hr) D_{oil} = Density of oil, measured (lb/scf, lb/gal, lb/barrel, or lb/m^3)
D-8** (F-19V)	HI	$HI_{rate\text{-}oil} = OIL_{rate} \, x \, \frac{GCV_{oil}}{10^6}$	$HI_{rate\text{-}oil}$ = Hourly heat input rate from combustion of oil (mmBtu/hr) OIL_{rate} = Rate of oil consumed (lb/hr for Equation D-8 or gal/hr for Equation F-19V) GCV_{oil} = Gross calorific value of oil (Btu/lb for Equation D-8 or Btu/gal for Equation F-19V) 10^6 = Conversion of Btu to mmBtu
F-19	HI	$HI_o = M_o \, x \, \frac{GCV_o}{10^6}$	HI_o = Hourly heat input rate from combustion of oil (mmBtu/hr) M_o = Mass rate of oil consumed per hour (lb/hr) GCV_o = Gross calorific value of oil (Btu/lb) 10^6 = Conversion of Btu to mmBtu
D-6	HI	$HI_{rate\text{-}gas} = \frac{GAS_{rate} \, x \, GCV_{gas}}{10^6}$	$HI_{rate\text{-}gas}$ = HI_g Hourly heat input rate from combustion of gaseous fuel (mmBtu/hr) GAS_{rate} = Q_g Average volumetric flow rate of fuel (100 scfh) GCV_{gas} = GCV_g Gross calorific value of gaseous fuel (Btu/100 scf) 10^6 = Conversion of Btu to mmBtu
F-20	HI	$HI_g = \frac{(Q_g \, x \, GCV_g)}{10^6}$	

** For units required to monitor NO_x mass emissions but <u>not</u> SO_2 mass emissions, if there is a volumetric oil flowmeter, it is possible to use Equation D-8 on a volumetric basis, rather than a mass basis. If using this option, represent the Equation as F-19V in the monitoring plan.

Table 43: Apportionment and Summation Formulas

Code	Parameter	Formula	Where:
F-21A	HI	$HI_i = HI_{CS}\left(\frac{t_{CS}}{t_i}\right)\left[\frac{MW_i\, t_i}{\sum_{i=1}^{n} MW_i\, t_i}\right]$	HI_i = Heat input rate for a unit (mmBtu/hr) HI_{CS} = Heat input rate at the common stack or pipe (mmBtu/hr) MW_i = Gross electrical output (MWe) t_i = Operating time at a particular unit t_{CS} = Operating time at common stack or pipe n = Total number of units using the common stack or pipe i = Designation of a particular unit
F-21B	HI	$HI_i = HI_{CS}\left(\frac{t_{CS}}{t_i}\right)\left[\frac{SF_i\, t_i}{\sum_{i=1}^{n} SF_i\, t_i}\right]$	HI_i = Heat input rate for a unit (mmBtu/hr) HI_{CS} = Heat input rate at the common stack or pipe (mmBtu/hr) n = Number of stacks or pipes SF_i = Gross steam load (flow) (lb/hr) t_i = Operating time at a particular unit t_{CS} = Operating time at common stack or pipe n = Total number of units using the common stack or pipe i = Designation of a particular unit
F-21C	HI	$HI_{Unit} = \frac{\sum_{s=1}^{n} HI_s\, t_s}{t_{Unit}}$	HI_{Unit} = Heat input rate for a unit (mmBtu/hr) HI_s = Heat input rate for each stack or duct (mmBtu/hr) t_{Unit} = Operating time for the unit t_s = Operating time for a particular stack or duct s = Designation of a particular stack or duct n = Total number stacks, ducts
F-21D	HI	$HI_i = HI_{CP}\left(\frac{t_{CP}}{t_i}\right)\left[\frac{FF_i\, t_i}{\sum_{i=1}^{n} FF_i\, t_i}\right]$	HI_i = Heat input rate for a unit (mmBtu/hr) HI_{CP} = Heat input rate at the common pipe (mmBtu/hr) FF_i = Fuel flow rate to a particular unit (appropriate units) t_i = Operating time at a particular unit (hr) t_{CP} = Operating time at common pipe (hr) n = Total number of units using the common pipe i = Designation of a particular unit

Code	Parameter	Formula	Where:
F-25	HI	$$HI_{CS} = \frac{\sum_{u=1}^{p} HI_u \; t_u}{t_{CS}}$$	HI_{CS} = Hourly average heat input rate at the common stack (mmBtu/hr) HI_u = Hourly average heat input rate for a unit (mmBtu/hr) p = Number of units t_u = Operating time at a particular unit t_{CS} = Operating time at common stack u = Designation of a particular unit

Table 44: NO_X Mass Emissions Formulas (lbs/hr)

Code	Parameter	Formula	Where:
F-24A	NOX	$$E_{(NOx)h} = ER_{(NOx)h} \; x \; HI_h$$	$E_{(NOx)h}$ = Hourly NO_x mass emissions rate in lb/hr K = 1.194×10^{-7} for NO_x ((lb/scf)/ppm) C_{h_d} = Hourly average, NO_x concentration (ppm (dry)) C_{h_w} = Hourly average, NO_x concentration, stack moisture basis (ppm (wet)) Q_h = Hourly average volumetric flow rate (scfh) $\%H_2O$ = Hourly average stack moisture content (percent by volume) HI_h = Hourly average heat input rate (mmBtu/hr) $ER_{(NOx)_h}$ = Hourly average NO_x emission rate (lb/mmBtu)
F-26A	NOX	$$E_{(NOx)h} = K \times C_{hw} \times Q_h$$	
F-26B	NOX	$$E_{(NOx)h} = K \; x \; C_{h_d} \; x \; Q_h \; x \; \frac{(100 - \% H_2O)}{100}$$	

Table 45: Miscellaneous Formula Codes

Code	Parameter	Description
N-GAS	FGAS	Net or total gas fuel flow rate (100 scfh)
N-OIL	FOIL	Net or total oil fuel flow rate (scf/hr, gal/hr, barrels/hr, m^3/hr, or lb/hr)
X-FL	FLOW	Average hourly stack flow rate (scfh). (To calculate the average of two or more primary flow monitors, for example, two ultrasonic monitors in an X-pattern)
T-FL	FLOW	Total stack flow rate (scfh)
SS-1A	SO2	Total hourly SO_2 mass emissions from the affected unit(s) in a subtractive stack configuration (lb/hr)
SS-1B	SO2	Hourly SO_2 mass emissions from a particular affected unit in a subtractive stack configuration (lb/hr)

Code	Parameter	Description
SS-2A	NOX	Total hourly NO_x mass emissions from the affected unit(s) in a subtractive stack configuration (lb/hr)
SS-2B	NOX	Hourly NO_x mass emissions from a particular affected unit in a subtractive stack configuration (lb/hr). (Apportioned by gross load)
SS-2C	NOX	Hourly NO_x mass emissions from a particular affected unit in a subtractive stack configuration (lb/hr). (Apportioned by steam load)
SS-3A	HIT	Total hourly heat input for the affected unit(s) in a subtractive stack configuration (mmBtu)
SS-3B	HI	Hourly heat input rate for a particular affected unit in a subtractive stack configuration (mmBtu/hr)
NS-1	NOXR	Hourly NO_x apportionment for NO_x affected units in a subtractive stack configuration (lb/mmBtu)
NS-2	NOXR	Hourly NO_x apportionment for NO_x affected units using simple NO_x apportionment (lb/mmBtu)
MS-1	HGRE, HGRH, HCLRE, HCLRH, HFRE, HFRH, SO2RE, SO2RH	Hourly flow-weighted pollutant emission rate for a MATS unit with monitored multiple stacks or ducts (lb/mmBru, lb/TBtu, lb/MWh, or lb/GWh, as appropriate)
MS-2	HGRE, HCLRE, HFRE, SO2RE	Flow rate-apportioned load value for a MATS unit with monitored multiple stacks or ducts subject to an electrical output-based standard

Formula Text *(FormulaText)*
When using a standard formula from Table 25 through Table 44 above, leave the Formula Text field blank. The Formula Text element is required only when a non-standard or custom equation is used, i.e., either: (1) one of the equations in Table 45; or (2) another site-specific equation not listed in Table 25 through Table 45. Use the following guidelines to construct formula text:

- **Variables.** In non-standard and custom equations, use recognizable symbols in conjunction with the operators and other representations shown in Table 46. To the extent possible, use symbols and nomenclature consistent with Table 25 through Table 44. Use parentheses and square brackets as needed, for added clarity.
- **Formula References.** Wherever another formula in the monitoring plan is part of a non-standard or custom equation, you may refer to the other formulas as "F#(XYZ)" where XYZ is the Formula ID, rather than rewriting the entire text of the formula in the non-standard or custom equation.
- **Constants.** Appropriate constants must also be included in each non-standard or custom equation, such as unit conversion factors, fuel factors, etc., that are required for the calculation.

Table 46: Representations for Electronic Reporting of Formulas

Operation	Recommended Representation	Example
Addition	+	MW_1 + MW_2
Subtraction	-	(100 - %H_2O)
Multiplication	*	C_d * F_d
Division	/	%CO_2/100
Exponential Power	**	1.66 x 10^{-7} = 1.66 * 10 ** -7
Subscript	Underscore	MW_1 = MW_1
Fraction of Heat Input from Fuel	X_<fuel>	X_oil
Gross Electrical Output	MW_<unit>	MW_1
Gross Steam Load (Flow)	SF_<unit>	SF_1
Hourly Emissions	E_h	E_h
Operating Time	T_<unit/stack>	T_CS1

Begin Date *(BeginDate)*
Report the date on which the formula was first applied to calculate the data. This date should correspond to the earliest date of the Begin Dates for the systems used in the calculation.

Begin Hour *(BeginHour)*
Report the hour in which the formula was first applied to calculate the data.

End Date *(EndDate)*
For formulas that are discontinued due to a change in monitoring, report the last date on which the formula was used to calculate the data. This value should be left blank for active records.

End Hour *(EndHour)*
Report the last hour in which the formula was used to calculate the data. This value should be left blank for active records.

Specific Considerations

Required Formulas
Depending on the monitoring methodologies and component types in use, include in the monitoring plan one or more of the following formulas:

- For CEMS Based Methodologies
  - SO_2 mass emission rate
  - NO_x emission rate
  - NO_x mass emission rate
  - CO_2 concentration (if CO_2 is calculated from O_2 data)

  - CO_2 mass emission rate
  - Hg emission rate
  - HCl emission rate
  - HF emission rate
  - SO_2 emission rate (MATS)
  - Heat input rate
  - F-factor proration calculation for mixed fuels (if elected)
  - Flow-weighted or heat input-weighted NO_x emission rate formulas for multiple stacks using two primary NO_x systems
  - Moisture formulas for moisture systems using O_2 wet and dry readings
  - Flow formulas for all flow systems containing two flow monitors
- For Fuel Flow Based Methodologies
  - SO_2 mass emission rate (ARP)
  - CO_2 mass emission rate (ARP)
  - NO_x emission rate for the unit where separate Appendix E single fuel curves were used (Equation E-2)
  - Heat input rate
  - Mass of oil formulas for OILV measurements (ARP)
  - Net fuel flow formulas for systems with more than one flowmeter
  - F-factor proration calculation for mixed fuels (if elected)

F-Factors and F-Factor Formulas

Heat input rate, NO_x emission rate, and CO_2 emission rate formulas based on CEMS require the inclusion of a specific F-factor based on the fuel being combusted. If a combination of fuels may be combusted within any given hourly period, two options for calculating emissions are available: (1) use the highest F-factor, or (2) use a prorated F-factor. Calculate prorated F-factors using Equation F-8 in 40 CFR Part 75, Appendix F. If a pro-rated F-factor formula is used, include it in this data set.

Equations 19-3D and 19.5D

- For units that use Equation 19-3 or 19-5 to calculate NO_x, SO_2, Hg, HCl, or HF emission rate (lb/mmBtu) during normal unit operation, if the O_2 diluent cap value is applied during startup and shutdown hours, you must use Equation 19-3D instead of Equation 19-3 or Equation 19-5D instead of Equation 19-5 (as applicable) for each hour in which the diluent cap is used, to avoid generating negative NO_x, SO_2, Hg, HCl, or HF emission rates.

Situations That Do <u>Not</u> Require Formulas

- Appendix E units do not need formulas for the NO_x emission rate.

- Units using LME methodology in §75.19 do not need formulas.
- Do not include formulas for cumulative quarterly or annual emissions or heat input.
- Do not provide formulas representing the default heat input rate or default NO_x emission rate for the unit or stack.

10.0 Monitoring Default Data

Monitoring Default Data Overview

MONITORING DEFAULT DATA records define Maximum Values, Minimum Values, Defaults, and Constants that are used in the Part 75 calculations or in the missing data routines. Report one record for each fuel type and parameter combination to define the applicable emission factor, moisture content, maximum potential value or diluent cap to be used at a monitoring location, as described below.

MONITORING DEFAULT DATA records are required for the following situations:

Missing Data Defaults (DefaultPurposeCode "MD")

- Maximum NO_x emission rate (MER) for any location using a NO_x-diluent monitoring CEM system.
- Maximum controlled NO_x emission rate (MCR) for bypass stacks or missing data substitution for hours in which the add-on controls are documented to be operating properly (see §§75.17(d), 75.31(c)(3), and 75.34(a)(5)).
- Fuel-specific maximum potential SO_2 or NO_x concentrations (MPCs), maximum potential NO_x emission rates (MERs), or maximum potential flow rates (MPFs), for units using fuel-specific CEMS missing data option under §75.33.
- Fuel-specific maximum potential SO_2 or NO_x concentrations or maximum potential NO_x emission rates, for units with add-on emission controls and unmonitored bypass stacks, if the fuel-specific MPC or MER is reported during hours when the flue gases are routed through the bypass stack and the add-on controls are either bypassed or not documented to be operating properly (see §§75.16 (c)(3) and 75.17 (d)).
- Fuel-specific maximum controlled NO_x concentrations or maximum controlled NO_x emission rates (MCR), for units with add-on emission controls and unmonitored bypass stacks, if the fuel-specific MEC or MCR is reported during hours when the flue gases are routed through the bypass stack when the add-on emissions controls are not bypassed, are in use, and are documented to be operating properly (see §75.17 (d)).
- Generic NO_x emission rate defaults for low mass emissions units. Use this value when NO_x controls are not operating or when default has expired.
- Maximum potential NO_x concentration and emission rate for Appendix E units. Use maximum emissions rate when NO_x controls are not operating, when burning emergency fuels, or when Appendix E curve has been invalidated or has expired.
- Maximum or minimum potential moisture percentage (required only if monitoring moisture continuously or using a moisture look-up table). Used for missing data purposes.
- Minimum emission values for subtractive stack situations, if approved by petition.
- Minimum potential O_2 used for missing data purposes.
- Maximum potential CO_2 concentration for missing data purposes for unit/stacks using an O_2 monitor to determine CO_2.

Low Mass Emissions Defaults (DefaultPurposeCode "LM")

- Fuel-specific defaults for NO_x, SO_2, and CO_2 emission rates for low mass emissions (LME) units under §75.19.
- Default maximum rated hourly heat input rate (mmBtu/hr) for low mass emissions units. Use this value if the heat input monitoring method is MHHI or if the substitute data code for a LTFF unit is MHHI. This parameter should be active beginning with the first quarter the unit uses the LME methodology.

Primary Monitoring Methodology Default (DefaultPurposeCode "PM")

- Default moisture values from §75.11(b) or §75.12(b), used to estimate stack moisture content for specific fuels.
- Site-specific default moisture percentages, approved by petition under §75.66.
- Moisture Fraction in Ambient Air for use with equation 19-2.

Diluent Cap Default (DefaultPurposeCode "DC")
CO_2 or O_2 diluent cap for heat input-based NO_x, SO_2, Hg, HCl, or HF emission rate calculations (lb/mmBtu or lb/TBtu, as applicable).

Default for Use with Equation F-23 (DefaultPurposeCode "F23")
Default SO_2 emission rates for units which use Equation F-23 to determine SO_2 mass emissions (see §75.11(e)(1)).

Minimum Fuel Flow Rate Default (DefaultPurposeCode "DM")
Default minimum fuel flow rate (refer to the Part 75 Emissions Monitoring Policy Manual).

See "Specific Considerations" section about when *not* to report this record.

Monitoring Default Data XML Model

Figure 20: Monitoring Default Data XML Elements

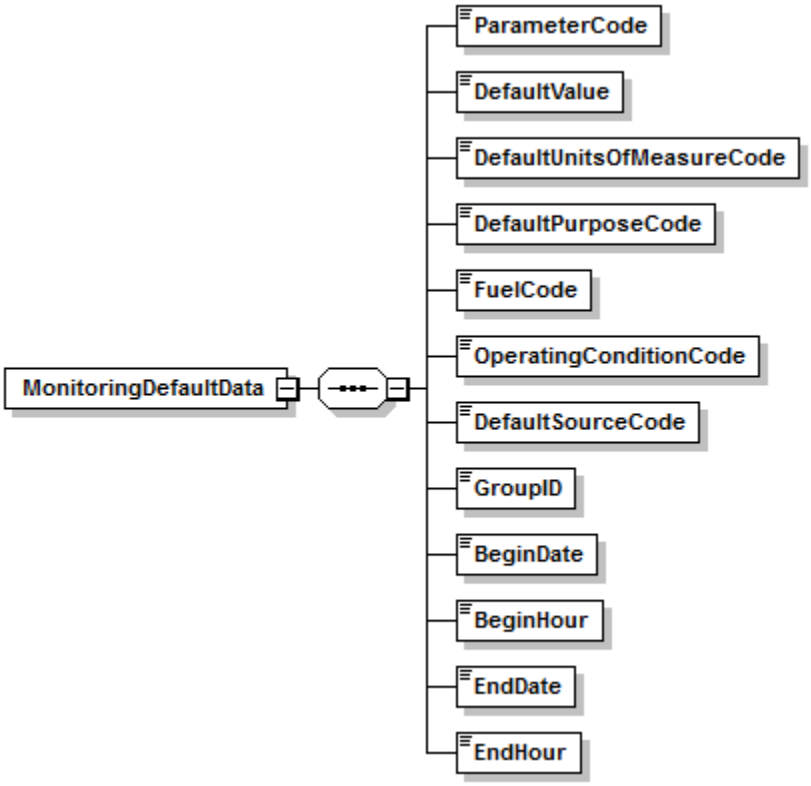

Dependencies for *Monitoring Default Data*

The MONITORING DEFAULT DATA record is dependent on the UNIT DATA record or the STACK PIPE DATA record.

No other records are dependent upon the MONITORING DEFAULT DATA record.

Monitoring Default Data XML Elements

Parameter Code *(ParameterCode)*
Report the parameter for which a default value is defined by using the appropriate uppercase codes as shown in Table 47:

Table 47: Parameter Codes and Descriptions for Monitoring Default

Category	Parameter Code	Description
Diluent Cap	CO2N	CO_2 Diluent Cap
	O2X	O_2 Diluent Cap
Low Mass Emissions Parameters (§§75.19 and 75.81(b))	CO2R	CO_2 Default Emission Factor, from Table 51 or Fuel and Unit-Specific CO_2 Default Emission Factor, for Combustion of "Other" Gaseous Fuel (tons/mmBtu)
	NOXR	NO_x Default Emission Factor, from Table 49 or Fuel and Unit-Specific NO_x Emission Rate[1] (lb/mmBtu)
	SO2R	SO_2 Default Emission Factor, from Table 50 or Fuel and Unit-Specific SO_2 Default Emission Factor Calculated Using Equation D-1h, either (1) for combustion of "other" gaseous fuel; or (2) for fuel oil combustion, based on the maximum weight percent sulfur in the operating permit (lb/mmBtu)
	MHHI	Maximum Rated Hourly Heat Input Rate (mmBtu/hr)
Missing Data Values or Maximum Values for Unmonitored Bypass Stack and Emergency Fuels	H2ON	Minimum Potential Percent Moisture
	H2OX	Maximum Potential Percent Moisture
	CO2X	Maximum Percent CO_2
	O2N	Minimum Potential Percent Oxygen
	SO2X	Fuel-Specific Maximum Potential SO_2 Concentration (ppm)
	NOCX	Fuel-Specific Maximum Potential (MPC) or Maximum Expected NO_x Concentration (ppm) for all hours or controlled hours. For Appendix E missing data purposes, report the MPC used to calculate the Maximum NO_x Emission Rate for each fuel curve and, if applicable, for Emergency fuel.
	NORX	Maximum NO_x Emission Rate (MER), MCR, or Fuel-Specific Maximum Potential or Maximum Controlled NO_x Emission Rate (lb/mmBtu) for all hours or controlled hours. For Appendix E missing data purposes, an MER must be determined for each fuel curve and, if applicable, for Emergency fuel.
	FLOX	Fuel-Specific Maximum Potential Flow Rate (scfh)
Moisture Default Parameter	H2O	Hourly Percent Moisture Content (%H_2O)
	BWA	Moisture Fraction in Ambient Air

Category	Parameter Code	Description
SO_2 Emission Rate Parameter for Use in Formula F-23	SO2R	SO_2 Generic Default Emission Factor for Pipeline Natural Gas; or Fuel and Unit-Specific Default Emission Factor Calculated Using Equation D-1h for combustion of "other" gaseous fuel; or Emission Factor approved by petition for a very low sulfur solid or liquid fuel (or combination of fuels) per §75.11 (e).
Other Parameters (subject to EPA approval of petition)	MNHI	Minimum Heat Input Rate (mmBtu/hr)
	MNNX	Minimum NO_x Emission Rate (lb/mmBtu)
Other Parameters (not subject to EPA approval of petition)	MNOF	Minimum Oil Flow Rate
	MNGF	Minimum Gas Flow Rate

[1] Report "NOXR" in the following cases: (1) for fuel-and-unit specific NO_x emission rates obtained by testing; and (2) for the maximum potential NO_x emission rate, if that value is reported in the interval from the first hour of use of the LME methodology until the hour of completion of fuel-and-unit specific NO_x emission rate testing (see §75.19 (a)(4)).

Default Value *(DefaultValue)*
Report the Maximum, Minimum, Default, or Constant Value to be used to the number of decimal places consistent with the corresponding hourly data record.

Table 48: Rounding Rules for Default Values

	Round to 0 Decimal Places	Round to 1 Decimal Places	Round to 2 Decimal Places	Round to 3 Decimal Places	Round to 4 Decimal Places	Round to Nearest 1000
Parameter Codes		CO2N, CO2X, H2O, H2ON, H2OX, MHHI, MNGF, MNHI, MNOF, NOCX, O2X, O2N, SO2X		BWA, CO2R, MNNX, NORX, NOXR	SO2R	FLOX

NO_x Maximum Emission Rate (MER)
For a NO_x-diluent monitoring system (lb/mmBtu), calculate and report a maximum potential NO_x emission rate (MER), based on the MPC value (reported in the Monitoring Span record) for use with missing data procedures.

Calculate NO_x MER on a unit or stack basis by using one of the following formulas and values:

$$E = K \ x \ C_d \ x \ F_d \ x \ \frac{20.9}{20.9 - \% O_{2_d}}$$

(Equation F-5)

Where:

E	=	Pollutant emissions during unit operation, lb/mmBtu;
K	=	1.194×10^{-7} (lb/dscf)/ppm NO_x;
C_d	=	NO_x concentration (dry) (use MPC value);
F_d (dscf/mmBtu)	=	Dry basis F-factor used for the unit in Monitoring Formula; and
$\%O_{2d}$	=	Maximum oxygen concentration during normal operating conditions, <u>or</u> use the diluent cap value of 14.0 percent O_2 for boilers and 19.0 percent O_2 for turbines <u>or</u> if MPC is derived from historical data, the O_2 reading recorded at the hour of the MPC may be used.

$$E = K \ x \ C_w \ x \ F_c \ x \ \frac{100}{\% CO_{2_w}}$$

(Equation F-6)

Where:

E	=	Pollutant emissions during unit operation, lb/mmBtu;
K	=	1.194×10^{-7} (lb/dscf)/ppm NO_x;
C_w	=	NO_x concentration (wet) (use MPC value);
F_c (scf CO_2/mmBtu)	=	Carbon-based F-factor used for the unit in Monitoring Formula 20; and
$\%CO_{2w}$	=	Minimum CO_2 concentration during normal operating conditions, <u>or</u> use the diluent cap value of 5.0 percent CO_2 for boilers and 1.0 percent CO_2 for turbines <u>or</u> if MPC is derived from historical data, the CO_2 reading recorded at the hour of the MPC may be used.

Diluent Cap Values

For a CO_2 diluent cap value, report 5.0 percent for a boiler or 1.0 percent for combustion turbines (including IGCC units). For an O_2 diluent cap value, report 14.0 percent for a boiler or 19.0 percent for turbines (including IGCC units).

Moisture Defaults

If using a default value to determine moisture, report fuel-specific moisture default values. Table 49 and Table 50 provide the fuel-specific moisture default values for coal-fired and wood-burning units and natural gas-fired boilers. Table 49 provides minimum default moisture values that are used in all emission (SO_2, NO_x, CO_2) and heat input rate calculations requiring moisture corrections, except for calculation of NO_x emission rates using Equation 19-3, 19-4, or 19-8 from EPA Method 19 in Appendix A-7 to 40 CFR 60. If Equation 19-3, 19-4, or 19-8 is used to

calculate NO_x emission rate, SO_2 emission rate, HCl emission rate, HF emission rate, or Hg emission rate, use the appropriate maximum default moisture value from Table 50.

If using a monitoring system to determine moisture, report either the maximum or minimum potential moisture percentage, depending on whether you use the standard or inverse missing data procedure from Part 75. For the minimum potential moisture percentage, report either a default value of 3.0 percent H_2O or a site-specific value obtained from 720 or more hours of historical data. For the maximum potential moisture percentage, report either a default value of 15.0 percent H_2O or a site-specific value derived from 720 or more hours of historical data.

Table 49: Fuel-Specific Minimum Default Moisture Values for SO_2, NO_x, CO_2, and Heat Input Rate Calculations

Fuel	Minimum Moisture Default Value
Anthracite Coal	3.0%
Bituminous Coal	6.0%
Sub-bituminous Coal	8.0%
Lignite Coal	11.0%
Wood	13.0%
Natural Gas (boilers only)	14.0%

Table 50: Fuel-Specific Maximum Default Moisture Values for NO_x Emission Rate Calculations

Fuel	Maximum Moisture Default Value
Anthracite Coal	5.0%
Bituminous Coal	8.0%
Sub-bituminous Coal	12.0%
Lignite Coal	13.0%
Wood	15.0%
Natural Gas (boilers only)	18.0%

LME Defaults

Table 51 contains the "generic" default NO_x emission factors for qualifying oil and gas-fired low mass emissions units under §75.19, which are based on the unit type and the type of fuel combusted. Unit and fuel-specific NO_x emission rates may be determined for low mass emissions units by emission testing, in lieu of using the defaults in Table 51. If testing is used to derive default emission rates, use the default source code "TEST" (see Table 58) and conduct LME Unit Default testing as described in Section 3.6 of the Quality Assurance and Certification Reporting Instructions.

For fuel oil combustion, in lieu of using the default values in Table 52, fuel and unit-specific default SO_2 emission rates may be determined based on the maximum allowable weight percentage of sulfur in the fuel, as specified in the operating permit (see §75.19(c)(1)(i)). For gaseous fuels other than natural gas, there are no generic default values available. Therefore, fuel and unit-specific emission rates must be determined for all emission parameters.

Table 51: NO_x Emission Factors (lb/mmBtu for Low Mass Emissions Units)

Boiler Type	Fuel Type	NO_x Emission Factors
Turbine	Natural Gas	0.7
	Oil	1.2
Boiler	Natural Gas	1.5
	Oil	2.0

Table 52 contains the Part 75 SO_2 emission factors for low mass emissions units, which are based on the type of fuel combusted.

Table 52: SO_2 Emission Factors (lb/mmBtu) for Low Mass Emissions Units

Fuel Type	SO_2 Emission Factors
Pipeline Natural Gas (as defined in §72.2)	0.0006
Natural Gas	0.06
Residual Oil or Other Oil	2.10
Diesel Fuel	0.50

Table 53 contains fuel-specific CO_2 emission factors for low mass emissions units.

Table 53: CO_2 Emission Factors (ton/mmBtu) for Low Mass Emissions Units

Fuel Type	CO_2 Emission Factors
Natural Gas	0.059
Oil	0.081

Default Units of Measure Code *(DefaultUnitsOfMeasureCode)*
Report the appropriate measurement units using the appropriate uppercase codes as shown in Table 54. For Parameter BWA, leave this field blank.

Table 54: Units of Measure Codes by Parameter

Units of Measure Code	Description	Parameter Code
PCT	Percent	CO2N, CO2X, H2O, H2ON, H2OX, O2N, O2X
LBMMBTU	Pounds per Million Btu	MNNX, NOXR, SO2R, NORX
MMBTUHR	Million Btu per Hour	MNHI, MHHI
TNMMBTU	Tons per Million Btu	CO2R
SCFH	Standard Cubic Feet per Hour	MNOF, FLOX
PPM	Parts per million	SO2X, NOCX
GALHR	Gallons of Oil per Hour	MNOF
BBLHR	Barrels of Oil per Hour	MNOF
M3HR	Cubic Meters of Oil per Hour	MNOF
LBHR	Pounds of Oil per Hour	MNOF
HSCF	Hundred SCF of Gas per Hour	MNGF

Default Purpose Code *(DefaultPurposeCode)*
Identify the purpose or intended use of the Default Value for reporting and emissions measurement by using the appropriate uppercase codes as shown in Table 55:

Table 55: Default Purpose Codes and Descriptions

Code	Description	Parameter Code
DC	Diluent Cap	CO2N, O2X
DM	Default Minimum Fuel Flow Rate	MNGF, MNOF
F23	SO_2 Emission Rate Default for Use in Equation F-23	SO2R
LM	Low Mass Emissions Unit Default (§§75.19 and 75.81(b))	CO2R, SO2R, NOXR, MHHI
MD	Missing Data, Unmonitored Bypass Stack, or Emergency Fuel	CO2X, FLOX, H2ON, H2OX, MNHI, MNNX, NOCX, NORX, O2N, SO2X
PM	Primary Measurement Methodology	BWA, H2O

Fuel Code *(FuelCode)*
Report the type of fuel associated with the default by using the appropriate uppercase codes as shown in Table 56. For maximum NO_x emission rate that is not fuel-specific or for maximum or minimum potential moisture or O_2/CO_2 values, report a Non-Fuel Specific code, or "NFS."

Table 56: Monitoring Default Fuel Codes and Descriptions

Type	Code	Description
LME Defaults (§75.19)	BFG	Blast Furnace Gas
	BUT	Butane (if measured as a gas)
	CDG	Coal Derived Gas
	COG	Coke Oven Gas
	DGG	Digester Gas
	DSL	Diesel Oil
	LFG	Landfill Gas
	LPG	Liquefied Petroleum Gas (if measured as a gas)
	NNG	Natural Gas
	OGS	Other Gas
	OIL	Residual Oil
	OOL	Other Oil
	PDG	Producer Gas
	PNG	Pipeline Natural Gas (as defined in §72.2)
	PRG	Process Gas
	PRP	Propane (if measured as a gas)
	RFG	Refinery Gas
	SRG	Unrefined Sour Gas
Moisture	ANT	Anthracite Coal
	BT	Bituminous Coal
	CRF	Coal Refuse (culm or gob)
	LIG	Lignite
	NNG	Natural Gas (including Pipeline Natural Gas)
	PNG	Pipeline Natural Gas
	SUB	Sub-bituminous Coal
	W	Wood

Type	Code	Description
SO_2 Emission Rate Default for Use in Equation F-23	NNG	Natural Gas
	PNG	Pipeline Natural Gas
	OGS	Other Gas
	* or MIX	*With an approved petition, any liquid or solid fuel type that qualifies as very low sulfur fuel, or a mixture of such fuels. See fuel code list in UNIT FUEL DATA
Fuel-Specific CEMS Missing Data	BFG	Blast Furnace Gas
	BUT	Butane (if measured as a gas)
	C	Coal
	CDG	Coal-Derived Gas
	COG	Coke Oven Gas
	CRF	Coal Refuse (culm or gob)
	DGG	Digester Gas
	DSL	Diesel Oil
	LFG	Landfill Gas
	LPG	Liquefied Petroleum Gas (if measured as a gas)
	MIX	Co-Fired Fuels
	NNG	Natural Gas
	OGS	Other Gas
	OIL	Residual Oil
Fuel-Specific CEMS Missing Data (cont.)	OOL	Other Oil
	OSF	Other Solid Fuel
	PDG	Producer Gas
	PNG	Pipeline Natural Gas (as defined in §72.2)
	PRG	Process Gas
	PRP	Propane (if measured as a gas)
	PRS	Process Sludge
	PTC	Petroleum Coke
	R	Refuse
	RFG	Refinery Gas
	SRG	Unrefined Sour Gas
	TDF	Tire-Derived Fuel
	W	Wood
	WL	Waste Liquid

Type	Code	Description
Fuel-Specific MPC/MER or MEC/MCR Reporting During Bypass Stack Operating Hours	BFG	Blast Furnace Gas
	BUT	Butane (if measured as a gas)
	C	Coal
	CDG	Coal-Derived Gas
	COG	Coke Oven Gas
	CRF	Coal Refuse (culm or gob)
	DGG	Digester Gas
	DSL	Diesel Oil
	LFG	Landfill Gas
	LPG	Liquefied Petroleum Gas (if measured as a gas)
	NNG	Natural Gas
	OGS	Other Gas
	OIL	Residual Oil
	OOL	Other Oil
	OSF	Other Solid Fuel
Fuel-Specific MPC/MER or MEC/MCR Reporting During Bypass Stack Operating Hours (cont.)	PDG	Producer Gas
	PNG	Pipeline Natural Gas (as defined in §72.2)
	PRG	Process Gas
	PRP	Propane (if measured as a gas)
	PRS	Process Sludge
	PTC	Petroleum Coke
	R	Refuse
	RFG	Refinery Gas
	SRG	Unrefined Sour Gas
	TDF	Tire-Derived Fuel
	W	Wood
	WL	Waste Liquid

Operating Condition Code *(OperatingConditionCode)*
If the value is used only for controlled or uncontrolled hours, indicate this using a "C" or "U," as appropriate (for example, if using separate NORX codes for controlled and uncontrolled operating conditions, use the "C" code for the MCR rate value and "U" code for the MER rate value). If this is a unit-specific default NO_x emission rate for an LME combustion turbine that has base and peak rates, report "B" or "P" to indicate the operating condition to which this rate applies. Report "A" if the use of the value is not related to the control status of the unit or base versus peak operation, such as for diluent cap records. Table 57 summarizes operating condition codes and descriptions.

Table 57: Monitoring Default Operating Condition Codes and Descriptions

Operating Condition Code	Description
A	Any Hour
C	Controlled Hour
B	Base Load Hour (LME units)
P	Peak Load Hour (LME units)
U	Uncontrolled Hour

Default Source Code *(DefaultSourceCode)*
Report the means of selecting or determining the Maximum, Minimum, or Constant value by using the appropriate uppercase codes for the parameters reported as shown in Table 58:

Table 58: Default Source Codes and Descriptions

Default Source Code	Source of Value Description	Parameter
APP*	Approved (Petition)	MNNX, SO2R, MNHI, H2O, MHHI
DATA**	Historical or Other Relevant Data	O2N, O2X, CO2X, H2ON, H2OX, FLOX, SO2X, NOCX, NORX, NOXR, MNOF, MNGF, BWA
PERM	Maximum Weight Percent Sulfur in Fuel Oil, as Specified by Operating Permit (for LME)	SO2R, NORX, NOCX
TEST	Unit/Stack Testing	NOXR, FLOX, SO2X, NOCX, NORX
SAMP	Fuel Sampling	SO2R, CO2R, SO2X,
CONT	Contract Maximum	SO2R
DEF	Default Value from Part 75	CO2R, NOXR, CO2N, O2X, SO2R, H2ON, H2OX, SO2X, NOCX, NORX, H2O
MAXD	Maximum Value Based on Design or Nameplate Capacity	MHHI, NORX, NOCX

* Report "APP" if you have an approved petition to use a site-specific SO_2 emission factor for very low sulfur solid or liquid fuels.

** Report code "DATA" in this field if reporting the maximum potential NO_x emission rate in the interval from the first hour of use of the LME methodology until the hour of completion of fuel-and-unit specific NO_x emission rate testing (see §75.19 (a)(4)).

Group ID *(GroupID)*
Report data in this field only if the unit is included in a group of identical low mass emissions (LME) units under §75.19. Otherwise, leave this field blank.

Report the Group ID that has been assigned by the Designated Representative, if the default value reported in this MONITORING DATA DEFAULT record is a currently-applicable (i.e., active) fuel-and-unit-specific default NO_x emission rate for this unit and for the other units in a group of identical LME units under §75.19.

The default value for the group of identical units must be updated each time that a subset of the group is tested to establish the new default NO_x emission rate (for LME units). The minimum retest frequency for LME units is once every five years (20 calendar quarters).

Begin Date *(BeginDate)*
Report the date on which the default became effective for purposes of reporting emissions data.

Begin Hour *(BeginHour)*
Report the hour on which the default became effective for purposes of reporting emissions data.

End Date *(EndDate)*
Report the date after which the value will no longer be used. Submit a second Monitor Default record with an effective date to report a new value. This value should be left blank for active records.

End Hour *(EndHour)*
Report the hour after which the value will no longer be used. Submit a second Monitor Default record with an effective hour to report a new value. This value should be left blank for active records.

Specific Considerations

Situations *Not* Requiring Monitoring Default Data Submission

- Values for CO_2 or O_2 used to calculate the maximum potential velocity (MPV), which is used to determine the flow rate span value. Submit the information to support flow span calculations in hardcopy with the initial monitoring plan (and store on site). Do not report this information electronically in the EDR.
- Maximum oil and gas fuel flow rate. These values are defined in SYSTEM FUEL FLOW DATA.
- Maximum potential (or maximum expected) SO_2, NO_x, CO_2, or flow rate values, for units using the standard (*non-fuel-specific* (NSF)) CEMS missing data routines in §75.33. (These maximum potential and expected values are defined in MONITOR SPAN DATA.)
- Default high range value for SO_2 or NO_x (already defined in monitor span).
- Default SO_2 emission rates for Acid Rain Program units that use Appendix D to account for SO_2 mass emissions from the combustion of gaseous fuel. For these units, report the default SO_2 emission rates in the PARAMETER FUEL FLOW DATA record.
- Appendix D density and GCV values for oil and gas. These values are defined in the FUEL FLOW DATA record.

Specific Considerations for Units Using Equation F-23

- For pipeline natural gas combustion, report 0.0006 lb/mmBtu.
- For other natural gas combustion, report the default SO_2 emission rate (lb/mmBtu) calculated using Equation D-1h.
- For gaseous fuels other than natural gas that qualify under Section 2.3.6 of Appendix D to use a default SO_2 emission rate, report the emission rate (lb/mmBtu), calculated using Equation D-1h.
- For very low sulfur solid or liquid fuels or mixtures of these fuels with gaseous fuel, report the custom default SO_2 emission rate(s) approved by petition.

11.0 Monitoring Span Data

Monitoring Span Data Overview

MONITORING SPAN DATA contains information concerning the span and range values associated with the continuous emission monitors installed at unit or stack and the time period in which these values are effective. It also contains information regarding the Maximum Potential and Maximum controlled values for each parameter monitored.

Monitoring Span Data XML Model

Figure 21: *Monitoring Span Data* XML Elements

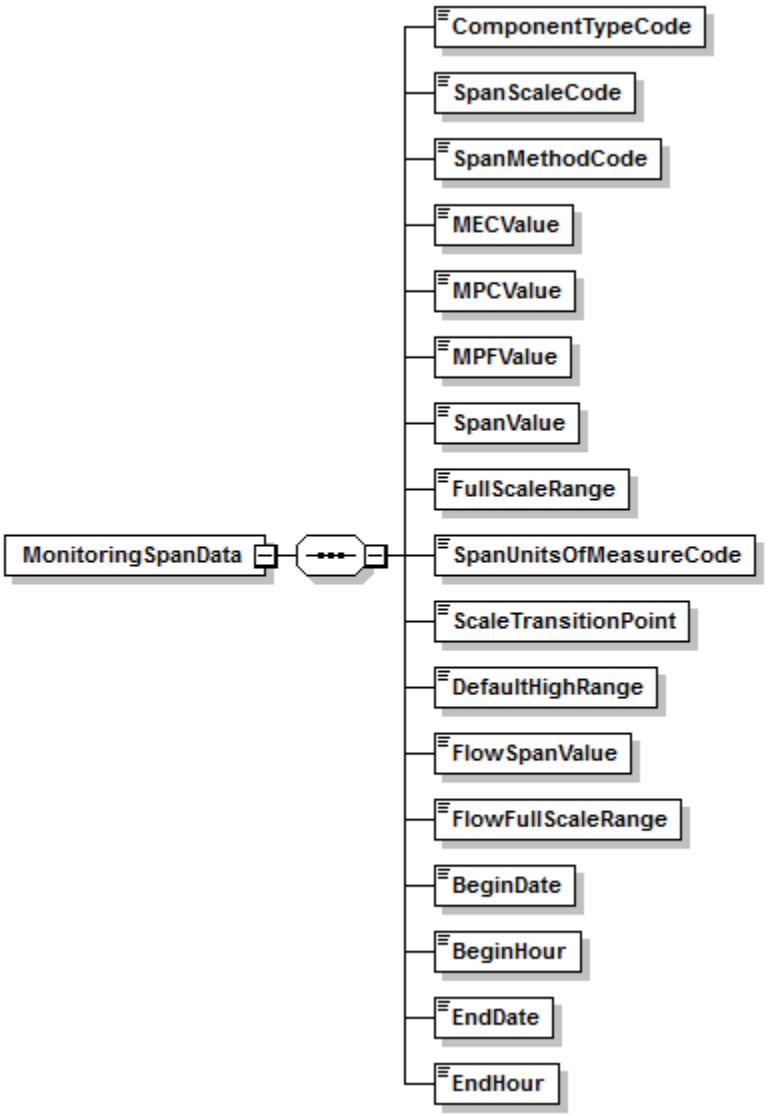

Dependencies for *Monitoring Span Data*

The MONITORING SPAN DATA record is dependent on the UNIT DATA record or the STACK PIPE DATA record.

No other records are dependent upon the MONITORING SPAN DATA record.

Monitoring Span Data XML Elements

Component Type Code *(ComponentTypeCode)*
Identify the component type (parameter) of the monitor using the following uppercase codes:

Table 59: Component Type Codes and Descriptions for Monitor Span

Code	Description
CO2	CO_2 Concentration (percent)
FLOW	Stack Flow
HCL	HCl Concentration (ppm)
HG	Hg concentration (µg/scm)
NOX	NO_x Concentration (ppm)
O2	O_2 Concentration (percent)
SO2	SO_2 Concentration (ppm)

Span Scale Code *(SpanScaleCode)*
Report either "H" to indicate high scale or "L" to indicate low scale, as appropriate for the component types in Table 59, except for FLOW. For HG and HCL, the span scale code must be "H." For FLOW leave this field blank.

Span Method Code *(SpanMethodCode)*
Report the method used to determine the maximum potential (or expected) concentration (MPC or MEC) or flow rate (MPF) by using the appropriate uppercase codes as shown in Table 60:

Table 60: Provision for Calculating MPC/MEC/MPF Codes and Descriptions

Code	Description
F	Formula (low and high-scale SO_2, flow rate, and low-scale NO_x, only)
HD	Historical Data
TR	Test Results
TB	Table Value or Other Default Value from Part 75 or from 40 CFR Part 63, Subpart UUUUU, Appendix A
OL	Other Limit
GS	Low Scale Default for SO_2 for Gas Units
PL	NO_x MEC Based on Permit Limit

Code	Description
ME	NO_x MPC Based on Manufacturer's Estimate of Uncontrolled Emissions
FS	Fuel Sampling and Analysis (for Hg MPC)

- Table 61 summarizes the recommended methods for determining MPC/MEC/MPF.
- Submit documentation with the original hardcopy monitoring plan submission and retain files of the supporting information concerning a unit for recordkeeping purposes if using Equations A-1a or A-1b from Appendix A to Part 75 or historical data to determine maximum potential flow (MPF).
- Leave this field blank for O_2 records.
- For CO_2, enter a default MPC value of 14.0 percent CO_2 for boilers and 6.0 percent CO_2 for turbines. For turbines, an alternative default MPC value below 6.0 percent CO_2 may be used if a technical justification is provided in the hard copy monitoring plan. Report a Span Method Code of "TB" if the default value is reported. The MPC may also be determined based on historical data. If historical data are used (720 hours, minimum), report the highest %CO_2 value observed in the historical look-back period as the MPC.

Table 61: Criteria for MPC/MEC/MPF Determinations

Component Type	Scale	Method Used to Determine MPC/MEC/MPF	Selection Criteria	Method Code
NOX	High	800 or 1600 ppm, as applicable	For coal-fired units	TB
		400 ppm	For oil- or gas-fired units	TB
		2000 ppm	Cement kilns	TB
		500 ppm	Process heaters burning oil	TB
		200 ppm	Process heaters burning only gaseous fuels	TB
		Historical CEM data	For initial determination or for changes in MPC as described in Section 2.1.2.5 of Appendix A	HD
		Other constant values from Appendix A, Tables 2-1 and 2-2	If historical data not available by boiler type and fuel	TB
		Test results	If historical data not available	TR
		Other, including other state/federal requirements	As justified	OL
		Manufacturer's estimate of uncontrolled emissions	For initial MPC determination, principally for new units	ME
	Low	Equation A-2	For units with emission controls	F
		Historical CEM data	For initial determination or for changes in MEC as described in Sections 2.1.2.2(c) and 2.1.2.5 of Appendix A	HD
		Other, including other state/federal requirements	As justified	OL
		Test results	If available	TR
		Permit limit	For initial MEC determination, principally for new units	PL
HCL	High	Other, including other state/federal requirements	As justified	OL
HG	High	Fuel-Specific Default MPC Values from 40 CFR Part 63, Subpart UUUUU, Appendix A	10 µg/scm Bituminous coal 10 µg/scm Sub-bituminous coal 16 µg/scm Lignite 10 µg/scm Waste coal	TB
		Site-Specific Emission Testing	Use the highest observed test results	TR
		Fuel Sampling and Analysis	Use the average weight percent of Hg from 3 samples, together with maximum fuel feed rate, fuel GCV, appropriate F-factor, etc.	FS

Component Type	Scale	Method Used to Determine MPC/MEC/MPF	Selection Criteria	Method Code
FLOW	N/A	Equation A-3a and Equation of Continuity*	Based on $\%CO_2$	F
		Equation A-3b and Equation of Continuity*	Based on $\%O_2$	F
		Historical data	For changes in MPF, as described in Section 2.1.4.3 of Appendix A	HD
		Test results	If available	TR
SO2	High	Equation A-1a	Based on $\%CO_2$	F
		Equation A-1b	Based on $\%O_2$	F
		Historical CEM data	For initial determination or for changes in MPC as described in Section 2.1.1.5 of Appendix A	HD
		Test results	If available	TR
		Other, including other state/federal requirements	As justified	OL
	Low	Equation A-2	For units with emission controls	F
		Historical CEM data	For initial determination or for changes in MEC as described in Section 2.1.1.5 of Appendix A	HD
		# 200 ppm (span value)	For units burning only very low sulfur fuel (as defined in §72.2)	GS
		Other, including other state/federal requirements	As justified	OL

* The maximum potential flow rate (MPF) is calculated using the Equation of Continuity: MPF = 60 x MPV x A_s. In this equation, MPV is the maximum potential velocity (from Equation A-3a or A-3b or from test results), in units of wet, standard feet per minute, and A_s is the cross-sectional area of the stack at the flow monitor location.

MEC Value *(MECValue)*
If required to determine MEC per Part 75, Appendix A, report the Maximum Expected Concentration (MEC) value for the location in the SO_2 and NO_x span records. Report MEC for SO_2 and NO_x to one decimal place. Report this value in the high-scale record and, if a low scale is defined, also in the low-scale record. Leave this field blank for other parameters.

MPC Value *(MPCValue)*
In the high scale record for NO_x, SO_2, or CO_2, report the Maximum Potential Concentration (MPC) value for the location. Report MPC for NO_x, SO_2, and Hg to one decimal place. For O_2, leave this field blank.

MPF Value *(MPFValue)*
If the span record is for parameter FLOW, report the Maximum Potential Flow (MPF) value for the monitoring location in standard cubic feet per hour (scfh) on a wet basis.

Span Value *(SpanValue)*
Report the Span Value determined according to the requirements of Part 75 or (if applicable) 40 CFR Part 63, Subpart UUUUU. If using a default high range value for SO_2 or NO_x, leave this field blank in the high scale record.

For HCl, determine the span value as follows. Multiply the HCl concentration (ppm) corresponding to the emissions standard by two and round off the result to the next highest multiple of 5 ppm. Span values must be between 1 ppm and 20 ppm.

For Hg, determine the span value as follows. Multiply the Hg concentration (µg/scm) corresponding to the emission standard by two and round off the result to either: the next highest integer; the next highest multiple of 5 µg/scm; or the next highest multiple of 10 µg/scm.

For SO_2 and NO_x, high-scale span values must be between 100 percent and 125 percent of the maximum potential concentration, rounded up to the next highest multiple of 100 ppm (or, alternatively, rounded up to the next 10 ppm if 125 percent of MPC is less than 500 ppm). Low-scale span values must be between 100 percent and 125 percent of MEC, rounded upward to the next highest multiple of 10 ppm.

For flow rate, the span value is the calibration span value and must be reported in the units used for daily calibrations. To determine the calibration span value for monitors that are not calibrated in units of inches of H_2O, first convert the maximum potential velocity (MPV) from units of wet standard feet per minute (wsfpm) to the units used for daily calibration. Multiply the result by a factor no less than 1.00 and no more than 1.25 and round up, retaining at least two significant figures. For flow monitors calibrated in inches of water, report the calibration span value to two decimal places.

For CO_2 and O_2, report the appropriate percentage (see Part 75, Appendix A, §2.1.3), to the nearest one percent CO_2 or O_2, not ppm.

Full Scale Range *(FullScaleRange)*
Report the full-scale range in the units used for daily calibrations for SO_2, NO_x, CO_2, O_2, HCl, and flow rate. As a general guideline, select the range such that, to the extent practicable, the majority of the readings obtained during normal operation of the monitor are between 20 and 80 percent of full-scale. See Section 2.1 of Appendix A to Part 75 for allowable exceptions to this guideline. The full-scale range must be greater than or equal to the span value. Leave this field blank in the high scale Monitoring Span record if using a default high range value for SO_2 or NO_x. For Hg, the analyzer range must be high enough to read the MPC value.

Span Units of Measure Code *(SpanUnitsOfMeasureCode)*
For SO_2, HCl, and NO_x, report PPM. For O_2 and CO_2, report PCT.

For Hg, report UGSCM, which represents micrograms per standard cubic meter.

For a flow span record, report one of the following uppercase codes to indicate the units used to report and perform daily calibrations based on span:

Table 62: Flow Span Calibration Units of Measure

Code	Description
ACFH	Actual Cubic Feet of Stack Flow per Hour
ACFM	Actual Cubic Feet of Stack Flow per Minute
AFPM	Actual Feet of Stack Flow per Minute
AFSEC	Actual Feet of Stack Flow per Second
AMSEC	Actual Meters of Stack Flow per Second
INH2O	Inches of Water
KACFH	Thousand Actual Cubic Feet of Stack Flow per Hour
KACFM	Thousand Actual Cubic Feet of Stack Flow per Minute
KAFPM	Thousand Actual Feet of Stack Flow per Minute
KSCFH	Thousand Standard Cubic Feet of Stack Flow per Hour
KSCFM	Thousand Standard Cubic Feet of Stack Flow per Minute
KSFPM	Thousand Standard Feet of Stack Flow per Minute
MACFH	Million Actual Cubic Feet of Stack Flow per Hour
MSCFH	Million Standard Cubic Feet of Stack Flow per Hour
SCFH	Standard Cubic Feet of Stack Flow per Hour
SCFM	Standard Cubic Feet of Stack Flow per Minute
SFPM	Standard Feet of Stack Flow per Minute
SMSEC	Standard Meters of Stack Flow per Second

Scale Transition Point *(ScaleTransitionPoint)*
If a dual range analyzer is installed for NO_x, SO_2 or CO_2 (see ANALYZER RANGE DATA), report the concentration value at which the DAHS switches from recording on the normal range to recording on the secondary range (usually low to high). Report this value in both the low and high scale records. Scale transition point is not reported for FLOW, HCl, and Hg span.

Default High Range *(DefaultHighRange)*
For parameter SO_2 or NO_x, if using a default high range, report the actual default value in this field in the high scale record. The default high range value must be 200 percent of the maximum potential concentration. Report this value only in the high scale record for the parameter.

For the parameters HG, HCl, CO_2, O_2, or FLOW, leave this field blank.

Flow Span Value *(FlowSpanValue)*
For the parameter FLOW, report the flow rate span value in scfh, which is the product of the MPF and a factor no less than 1.00 and no greater than 1.25. This factor must be the same one that was used to determine the calibration span value. Round the flow rate span value upward to the next highest 1000 scfh.

Flow Full Scale Range *(FlowFullScaleRange)*
Report the actual full-scale range value expressed in units of scfh for the parameter FLOW. The flow rate full-scale range value must be greater than or equal to the flow rate span value.

Begin Date *(BeginDate)*
Report the date that the current span value became effective for reporting emissions data.

If you have elected to use a default high range value for SO_2 or NO_x, report the date on which the default high range was implemented in the DAHS.

Begin Hour *(BeginHour)*
Report the hour that the current span value became effective for reporting emissions data.

If you have elected to use a default high range value for SO_2 or NO_x, report the hour on which the default high range was implemented in the DAHS.

End Date *(EndDate)*
Report the last date on which the span record was in effect. Leave this field blank for active span records. If a span change was made, report both the original span record with the appropriate end date and the new span record with the appropriate begin date.

End Hour *(EndHour)*
Report the last hour in which the span record was in effect. Leave this field blank for active span records.

Specific Considerations

CEMS Methodology

- If you are using a CEMS methodology, MONITORING SPAN DATA must be included for each parameter (e.g., NOX, SO2, CO2, O2, HCL, HG, or FLOW) that is measured with CEMS.
- Note that for units that combust more than one type of fuel, the maximum potential concentration (MPC) values reported in MONITORING SPAN DATA are generally based on the fuel that produces the highest pollutant concentration or emission rate. However, if you elect to use one of the fuel-specific missing data options in §75.33, 75.16(c)(3), or 75.17(d)(2), in addition to reporting the "conventional" MPC or MER values for the highest emitting fuel in MONITORING SPAN DATA, you must report a fuel-specific maximum potential value for each of the other fuels, using MONITORING DEFAULT DATA.

Dual Ranges and Separate *Monitoring Span Data* Records
If SO_2, NO_x, CO_2, or O_2 emission concentrations vary such that dual ranges are required (e.g., due to fuel switching or emission controls), provide separate MONITORING SPAN DATA records for the low scale and high scale values.

High Scale and Low Scale Span Records
If you elect to use a default high range value (200 percent of MPC for SO_2 or NO_x) instead of calibrating and maintaining a high monitor range for hours in which emissions exceed the full-scale of the low range, submit both high scale and low scale span records, but in the high scale

record, only report values for the following elements: the MPC, Begin Date and Begin Hour, the activation date and hour of the default high range value, and Default High Range (the default high range value of 200 percent of MPC).

DP-Type Flow Monitors Calibrated in Units of Inches of H_2O

For DP-type flow monitors that are calibrated in units of inches of H_2O, select a value between 100 percent and 125 percent of the MPV. Then convert that value from units of wet, standard feet per minute (wsfpm) to units of wet actual feet per second (wafps). Then use Equation 2-7 in EPA Reference Method 2 (40 CFR 60, Appendix A-1) to convert the actual velocity to an equivalent delta-P value in inches of H_2O. Retain at least two decimal places in the delta-P value. In performing these calculations, the values of stack temperature, stack pressure, stack gas molecular weight and the pitot tube coefficient may be estimated based on the results of previous emission testing.

Updating the *Monitoring Span Data* Record

When any value in a MONITORING SPAN DATA record changes, update the information by reporting both the original span record with the appropriate end date and the new span record with the appropriate begin date.

If you have discontinued the use of a default high range value for SO_2 or NO_x in favor of using a span value, report in the old record the last date and hour on which the default high range was in use. In the new record, report the date and hour on which the new span value became effective. If changing from a span value to a default high range value for SO_2 or NO_x, report the date on which the default high range was implemented in the DAHS.

In order to correct a previously submitted record that contains erroneous information, resubmit the MONITORING SPAN DATA record with the corrected information.

12.0 Rectangular Duct WAF Data

***Rectangular Duct WAF Data* Overview**

Submit a RECTANGULAR DUCT WAF DATA record for rectangular ducts or stacks with installed flow monitors, in which a wall effects adjustment factor (WAF) was determined using Conditional Test Method CTM-041 and applied to the hourly flow rate data. Conditional Test Method CTM-041 is used to either:

- Determine a site-specific default WAF; or
- Make wall effects measurements and calculate an average WAF, based on three or more test runs.

If you elect to measure wall effects, the measurements may be made at any load level (low, mid or high) and may either be coupled with the test runs of a flow RATA or may be made separately. Once a default or measured WAF has been determined, it may be entered into the programming of the flow monitor as a correction to the cross-sectional area of the rectangular stack or duct, thereby adjusting the measured stack gas flow rates for wall effects. Then, when a subsequent RATA of the flow monitor is performed, the same WAF that is being used to correct the flow monitor readings should be applied to the reference method test data.

All units/stacks currently applying a wall effects correction obtained using CTM-041 to flow rate data must report a RECTANGULAR DUCT WAF DATA record in each quarterly submission. For units not presently applying a wall effects correction, if you intend to begin using a WAF, report this record after the WAF has been determined and prior to the next quarterly file that uses that WAF.

If a new WAF test has been performed (because the stack or ductwork is altered such that the flow profile is significantly changed), report two RECTANGULAR DUCT WAF DATA records: one that ends the record that is no longer effective, and one that reports the new wall effects adjustment factor data.

Rectangular Duct WAF Data XML Model

Figure 22: *Rectangular Duct WAF Data* XML Elements

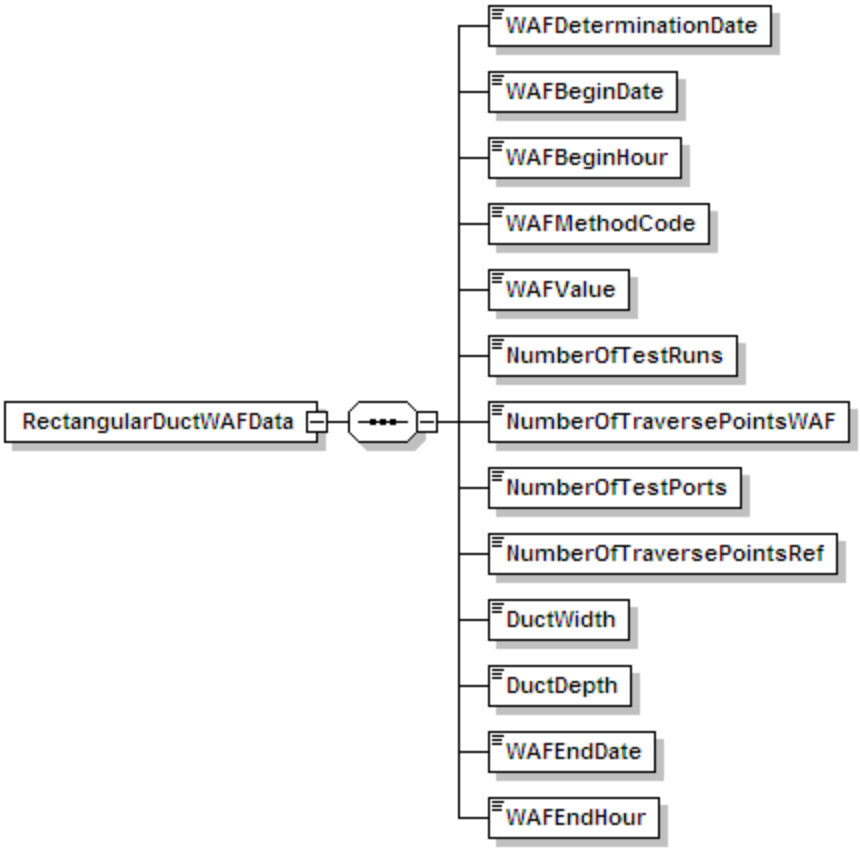

Dependencies for *Rectangular Duct WAF Data*

The RECTANGULAR DUCT WAF DATA record is dependent on the UNIT DATA record or the STACK PIPE DATA record.

No other records are dependent upon the RECTANGULAR DUCT WAF DATA record.

Rectangular Duct WAF Data XML Elements

WAF Determination Date *(WAFDeterminationDate)*
Report the date the WAF was determined. Unless you are a first time user of CTM-041, this date must be on or prior to the WAF Begin Date. First time users of CTM-041 may retroactively apply the rectangular duct WAF back to January 1 of the year in which the rectangular duct WAF determination is made, unless the flow profile changed significantly during that period. Therefore, for first-time users, the WAF Begin Date may be earlier than the WAF Determination Date.

WAF Begin Date *(WAFBeginDate)*
Report the date on which the WAF was first applied to the flow rate data.

WAF Begin Hour *(WAFBeginHour)*
Report the hour in which the WAF was first applied to the flow rate data.

WAF Method Code *(WAFMethodCode)*
Report the appropriate WAF Method Code displayed in Table 63 to indicate the WAF calculation approach.

Table 63: WAF Method Code and Descriptions

Code	Description
FT	Full Test (CTM-041 §§8.1 and 8.2)
AT	Abbreviated Test (CTM-041 §8.4.1)
DF	Default Value (CTM-041 §8.4.2)

WAF Value *(WAFValue)*
Report the WAF applied to the flow rate data, to four decimal places, with a leading zero (e.g., 0.9750).

Number of Test Runs *(NumberOfTestRuns)*
Report the number of runs in the WAF test (must be one for default WAF and at least three for a measured WAF).

Number of Traverse Points WAF *(NumberOfTraversePointsWAF)*
Report the number of Method 1 traverse points in the WAF test runs.

Number of Test Ports *(NumberOfTestPorts)*
Report the number of test ports at which measurements were made during the WAF test runs.

Number of Traverse Points Reference *(NumberOfTraversePointsRef)*
Report the number of Method 1 traverse points in the "reference" flow RATA test runs. The reference flow RATA is either the RATA that accompanied the CTM-041 determination, or if the WAF was determined separately from a RATA, the RATA that most recently preceded the WAF determination. Consistent with CTM-041, the number of this data element for the "reference" flow RATA and for all subsequent flow RATAs must equal the Number of Traverse Points WAF data element, for the WAF test run(s). If you wish to increase the number of Method 1 traverse points used in a subsequent flow RATA, you must re-determine the WAF using an equal number of Method 1 traverse points.

Duct Width *(DuctWidth)*
Report the width of the rectangular duct at the test location (i.e., dimension L_x in Figure 1 of CTM-041), to the nearest 0.1 ft.

Duct Depth *(DuctDepth)*
Report the depth of the rectangular duct at the test location (i.e., dimension L_y in Figure 1 of CTM-041), to the nearest 0.1 ft.

WAF End Date *(WAFEndDate)*
Report the date on which the WAF was last applied to the flow rate data. Leave this field blank if this WAF is still being applied.

WAF End Hour *(WAFEndHour)*
Report the hour in which the WAF was last applied to the flow rate data. Leave this field blank if this WAF is still being applied.

13.0 Monitoring Load Data

Monitoring Load Data Overview

The MONITORING LOAD DATA record identifies the maximum load, the lower and upper boundaries of the range of operation and, if applicable, the normal load level(s) for a unit or other monitoring location. Report this record for every unit, stack, and pipe in the monitoring plan.

Monitoring Load Data XML Model

Figure 23: *Monitoring Load Data* XML Elements

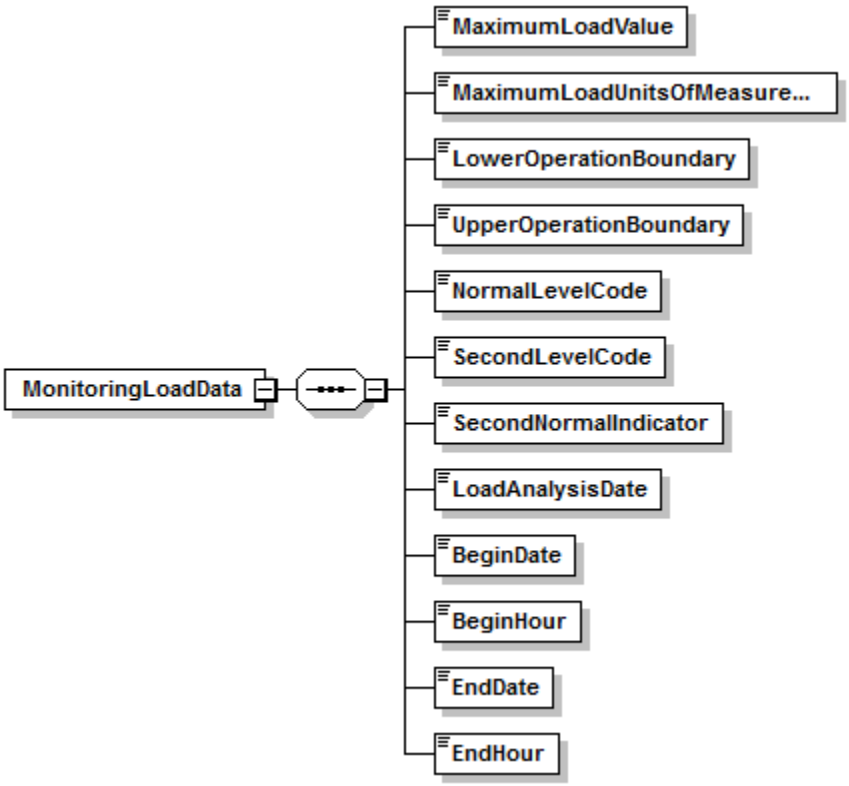

Dependencies for *Monitoring Load Data*

The MONITORING LOAD DATA record is dependent on the UNIT DATA record or the STACK PIPE DATA record.

No other records are dependent upon the MONITORING LOAD DATA record.

Monitoring Load Data XML Elements

Maximum Load Value *(MaximumLoadValue)*
This value is required for all units and all additional monitoring locations with the exception of non-load based units. Define the maximum hourly gross load associated with the unit, stack, or pipe at full capacity:

- For boilers and simple cycle turbines (including units with multiple stack exhaust configurations), this value is based on one of the following: (1) the nameplate capacity; (2) the nameplate capacity as derated; or (3) a value higher than nameplate, if the unit or stack historically operates at levels exceeding nameplate.
- For common stack (or common pipe) configurations, the maximum load will be the highest sustainable combined operating load for the units serving the common stack (or pipe).
- For multiple stacks, report the maximum hourly gross load for the associated unit.
- Determine the total maximum hourly gross load according to the guidelines in the Part 75 Emissions Monitoring Policy Manual for combined cycle (CC) combustion turbine units. For combined cycle combustion turbines where the HRSG produces steam, the equivalent load for the HRSG must be included in the maximum hourly gross load determination. Express the total unit load on a consistent basis, i.e., either in terms of electrical or steam load.
- For units subject to the MATS rule that use CEMS or sorbent trap monitoring systems to continuously monitor the Hg emissions rate in units of lb/GWh, or for MATS units that use CEMS to continuously monitor the SO_2, HCl, or HF emission rate in units of lb/MWh:
  1) If, for Part 75 purposes, you report gross electrical load in megawatts (MW) in the HOURLY OPERATING DATA records, report the maximum gross electrical load value in MW in this field. In this case, the hourly load data stream, in megawatts, in the HOURLY OPERATING DATA records will suffice for both Part 75 and MATS purposes. Otherwise:
  2) If, for Part 75 purposes, you report steam load or mmBtu/hr in the HOURLY OPERATING DATA records, report the maximum steam load or the maximum mmBtu/hr value in this field (as applicable). However, for the purposes of the MATS rule, you must report a second hourly load data stream, i.e., the equivalent hourly gross electrical load in megawatts, in the HOURLY OPERATING DATA records.
- Leave this field blank for units that do not produce electrical or steam load.

Maximum Load Units of Measure Code *(MaximumLoadUnitsOfMeasureCode)*
Identify the type of load information reported in this record by using the appropriate uppercase codes as shown in Table 64. Note that you must report the same units of measure in this field as are used to report hourly load for Part 75 purposes in the HOURLY OPERATING DATA records.

Table 64: Maximum Load Value Codes and Descriptions

Code	Description
MW	Electrical Capacity (in megawatts)
KLBHR	Steam (load) Mass Rate (in units of 1000 lbs/hr)
MMBTUHR	BTUs of Steam Produced (in mmBtu/hr)

Note: Leave this field blank for units that do not produce electrical or steam load.

Lower Operation Boundary *(LowerOperationBoundary)*
This value is required for all units and all additional monitoring locations where load-based missing data are used. Report the lower boundary of the range of operation for units that produce electrical or steam load, in units of megawatts, 1000 lb/hr of steam or mmBtu/hr of steam, as appropriate.

For single units (including units that have a multiple stack exhaust configuration), report the minimum safe, sustainable load for the unit.

For a common stack (or pipe), report the lowest safe, sustainable load for any of the units using the stack (or pipe) as the lower boundary of the range of operation. Alternatively, for frequently operated units discharging to a common stack (or using a common pipe), the sum of the minimum safe, stable loads of the units serving the common stack (or pipe) may be reported as the lower boundary of the operating range.

For multiple stacks, report, the minimum safe, stable load for the associated unit.

For non load-based units, report the lower boundary of the range of operation in terms of stack gas velocity (ft/sec), as described in Section 6.5.2.1(a) of Appendix A.

Upper Operation Boundary *(UpperOperationBoundary)*
This value is required for all units and all additional monitoring locations where load-based missing data are used. Report the upper boundary of the range of operation for units that produce electrical or steam load, in units of megawatts, 1000 lb/hr of steam, or mmBtu/hr of steam, as appropriate. The upper boundary of the range of operation must be equal to or less than the maximum hourly gross load reported in the Maximum Load Value.

Report the maximum sustainable load for single units (including units that have a multiple stack exhaust configuration), to either: (1) the nameplate capacity of the unit (less any physical or regulatory deratings); or (2) the highest sustainable load, based on a minimum of four representative quarters of historical operating data.

Report the sum of the maximum sustainable loads of all units using the stack (or pipe) for a common stack (or pipe), as the upper boundary of the range of operation. If that combined load is unattainable in practice, report the highest sustainable combined load, based on a minimum of four representative quarters of historical operating data.

For multiple stacks, report the maximum sustainable load for the associated unit.

For non load-based units, report the upper boundary of the range of operation in terms of stack gas velocity (ft/sec), as described in Section 6.5.2.1(a) of Appendix A.

Normal Level Code *(NormalLevelCode)*
This value is required for all units and all additional monitoring locations where load-based missing data are used, except for peaking units or stacks linked to peaking units. Designate and report the most frequently used load level ("L," "M," or "H") as the "normal" load level for units that produce electrical or steam load, based upon the results of the historical load data analysis

described in Section 6.5.2.1(c) of Appendix A. For all SO_2, NO_x, and flow RATAs conducted at the designated normal load, a bias test is required.

For non load-based units, designate the normal operating level based on knowledge of the unit and operating experience with the industrial process.

Second Level Code *(SecondLevelCode)*
This value is required for all units and all additional monitoring locations where load-based missing data are used, except for peaking units or stacks linked to peaking units. Report the second most frequently used level based on the results of the historical load data analysis described in Section 6.5.2.1(c) of Appendix A (for units that produce electrical or steam load), or, based on knowledge of the unit and operating experience with the industrial process (for non load-based units).

Second Normal Indicator *(SecondNormalIndicator)*
This value is required for all units and all additional monitoring locations where load-based missing data are used, except for peaking units or stacks linked to peaking units. For units that produce electrical or steam load, based upon the results of the historical load data analysis, the second most frequently used load level may be elected to be designated as an additional normal load level. If you wish to designate the second most frequently used operating level as a second normal level, report "1" for this element. Otherwise, report "0." Note that if you designate the second level as a normal level, you must perform a bias test for all SO_2, NO_x, and flow RATAs conducted at this load level.

For non load-based units, a second normal operating level may be designated, based on knowledge of the unit and operating experience with the industrial process.

Load Analysis Date *(LoadAnalysisDate)*
Report the year, month and day of the historical load data analysis (see Sections 6.5.2.1 (c) and (d) of Appendix A) that defines the two most frequently used load levels, and the normal load level(s) for units that produce electrical or steam load.

Leave this field blank for new units since no load analysis has yet been completed.

Leave this field blank for non load-based units.

Begin Date *(BeginDate)*
Report the date on which the load information became effective. For the <u>initial</u> load analysis at a particular unit or stack, report the Begin Date as the first day of the quarter in which the data analysis was performed (i.e., 2005-01-01 or 2005-04-01, etc.), rather than the actual date of the analysis unless the two dates are the same. For records created to indicate a change to the load information, this date should equal the load analysis date if the change is based on a new load analysis. But, if you are simply electing to add a second normal load, or to make minor adjustments to the boundaries of the operating range, or updating other information that is not dependent on the load analysis, the Begin Date may be later than the load analysis date.

For peaking units, report the later of: (a) the date of program participation; or (b) the date on which peaking status was first claimed for the unit.

For non load-based units, report the date on which the determination of the operating range, the most frequent operating level(s), and the normal operating level(s) is made.

Begin Hour *(BeginHour)*
Report the hour in which the load information became effective.

End Date *(EndDate)*
Report the last date on which the load information was in effect. Report an end date only when another MONITORING LOAD DATA record will be reported to provide a change to one or more data elements, either because a new historical load data analysis was performed which indicated a change, or because you elect to change the second normal load designation or the range of operation. When this occurs, submit one MONITORING LOAD DATA record with the results of the previous load data analysis and report the end date in this field. Submit a second MONITORING LOAD DATA record with the results of the new load data analysis or choice, leaving this field blank (see "Specific Considerations" below).

For non load-based units, report an end date only when a change in the manner of unit or process operation results in a change in the operating range and/or the most frequently used operating levels, and/or the designated normal operating level(s). Should this occur, submit two MONITORING LOAD DATA records, one to deactivate the old information, and one to activate the new information, as described immediately above for load-based units.

End Hour *(EndHour)*
Report the last date on which the load information was in effect. This value should be left blank for active records.

Specific Considerations

Range of Operation for Electrical or Steam Load Units and Non Load-Based Units
MONITORING LOAD DATA defines the upper and lower boundaries of the "range of operation" for the unit (or units, for a common stack or pipe). For units that produce electrical or steam load, the range of operation extends from the minimum safe, stable operating load to the maximum sustainable load, and provides the basis for defining the low, mid, and high operating load levels. For non load-based units (e.g., cement kilns, refinery process heaters, etc.), the range of operation extends from the minimum potential stack gas velocity, in ft/sec (or, alternatively, from 0.0 ft/sec) to the maximum potential velocity.

Purpose of Historical Load Data Analysis
MONITORING LOAD DATA is also used to report the results of an analysis of historical load data for the unit or stack, as described in Part 75 (see Section 6.5.2.1(c) of Appendix A). The results of the historical load data analysis provide the basis for: (1) defining the normal operating load level (or levels) for the unit or stack; (2) determining the two appropriate load levels at which to conduct annual two-load flow RATAs; (3) determining, for multi-load flow RATAs, the two appropriate load levels at which to calculate bias adjustment factors, when two load levels are designated as normal and a normal load bias test is failed; and (4) determining the appropriate load level at which to conduct the quarterly flow-to-load ratio test. Note that for peaking units, the historical load data analysis is not required.

Historical Load Data Analysis for Non Load-Based Units
Non load-based units are exempted from the historical load data analysis in Section 6.5.2.1 (c) of Appendix A. For these units, the most frequently used operating levels and the normal operating level(s) are determined by the owner or operator, using sound engineering judgment, based on operating experience with the unit and knowledge of the industrial process.

Upper and Lower Boundaries for New or Newly-Affected Units
For new or newly-affected units, in the initial monitoring plan submittal, use the best available estimates of the upper and lower boundaries of the range of operation and determine the normal load (or operating level) and the two most frequently-used load (or operating) levels based on the anticipated manner of operating the unit. Report the date of submittal of the initial monitoring plan or the date on which commercial operation of the unit begins (whichever is earlier) in the Begin Date field.

Updating the *Monitoring Load Data* Record
When the manner of operating the unit(s) changes significantly, update the information in MONITORING LOAD DATA by submitting two MONITORING LOAD DATA records. First, close out the existing monitor load record by entering an end date and hour. Next, create a new monitor load record indicating the Begin Date and Hour for the new record.

In order to correct a previously submitted record that contains erroneous information, resubmit the MONITORING LOAD DATA record with the corrected information. For example, if the Normal Level Code was previously submitted as "H" (for high-load) when the normal load level should have been "M" (for mid-load), the record should be updated and resubmitted. Note that the BeginDate and BeginHour elements should not be updated, unless the BeginDate and/or BeginHour are the elements to be corrected.

Once the operating range and normal load level(s) have been established, Part 75 does <u>not</u> require repeating the historical load analysis unless a significant change in the manner of unit operation occurs, which may result in a re-designation of the operating range and/or the normal load level(s) and/or the two most frequently used load levels. At least two quarters of representative data are required to document that such a change in unit operation has occurred. If such a change has been determined, establish the new load information by creating a new MONITORING LOAD DATA record with the new information, and report the old record with the appropriate End Date and End Hour (which must be just prior to the Begin Date and Begin Hour of the new record).

If, however, you elect to repeat the load analysis periodically, e.g., prior to each annual RATA, in order to confirm that nothing has changed (this is good practice, even though this is not required by the regulation), do <u>not</u> change the Begin Date unless the new data analysis shows that a re-designation of the operating range and/or the normal load and/or the two most frequently-used load levels is necessary.

For peaking units, if peaking status is lost at the end of a year or ozone season, the MONITORING LOAD DATA record information must be deactivated as of December 31 (for a year-round reporter) or September 30 (for an ozone season-only reporter) of that year. Then, you must perform a historical load analysis and activate a new MONITORING LOAD DATA record, as described in the Load Analysis data element instructions above.

When transitioning from non-peaking status to peaking unit status at the beginning of a new calendar year or ozone season, deactivate the existing MONITORING LOAD DATA record, as of December 31 of the previous year (for a year-round reporter) or September 30 of the previous year (for an ozone season-only reporter). Then, activate a new MONITORING LOAD DATA record, as of January 1 of the current year (for a year-round reporter) or October 1 of the previous year (for an ozone season-only reporter). A new load analysis is not required, because the whole operating range is considered normal for a peaking unit. Therefore, in the new MONITORING LOAD DATA record, leave Normal Level Code through Second Level Indicator data elements blank. A MONITORING QUALIFICATION PERCENT DATA record must also be submitted, to claim peaking unit status.

MATS Units Reporting Steam Load or mmBtu/hr for Part 75

If you seek to comply with one or more electrical output-based SO_2, Hg, HF, or HCl emission rate limits under the MATS rule, you must report gross electrical load in megawatts. However, if, for Part 75 purposes, you report steam load or mmBtu/hr in the HOURLY OPERATING DATA records and in the Maximum Load Value data element of this section, you must report the equivalent hourly electrical load (MW) in the MATS Hour Load data element in the HOURLY OPERATING DATA records.

14.0 Monitoring Qualification Data

Monitoring Qualification Data Overview

Report a MONITORING QUALIFICATION DATA record for a unit for which qualification is sought as a gas-fired unit or a peaking unit, or to use the low mass emissions (LME) monitoring and reporting provisions in §75.19. Also, you are strongly encouraged to report an optional MONITORING QUALIFICATION DATA record if your EGU is subject to the MATS rule and you are using the low-emitting EGU (LEE) option to demonstrate:

- Hg compliance for any EGU(s); or
- HCl compliance for any coal-fired, petroleum coke-fired, or IGCC EGU(s).

A separate record must be submitted for each type of qualification sought. For example, two separate record sets must be submitted for a single unit to indicate both gas-fired and peaking unit status. Also include the appropriate Monitoring Qualification records providing the historical or projected information to demonstrate peaking, gas-fired, or LME status. See instructions for MONITORING QUAL LME DATA and MONITORING QUAL PERCENT DATA for more information.

To indicate that a unit or stack has an approved petition to perform flow RATAs at only a single load or two loads, report this record using the applicable Qualification Type Code (PRATA1 or PRATA2).

To indicate that a MATS-affected unit or units are in an emissions averaging group, report this record with the applicable Qualification Type Code (HGAVG).

Monitoring Qualification Data XML Model

Figure 24: *Monitoring Qualification Data* XML Elements

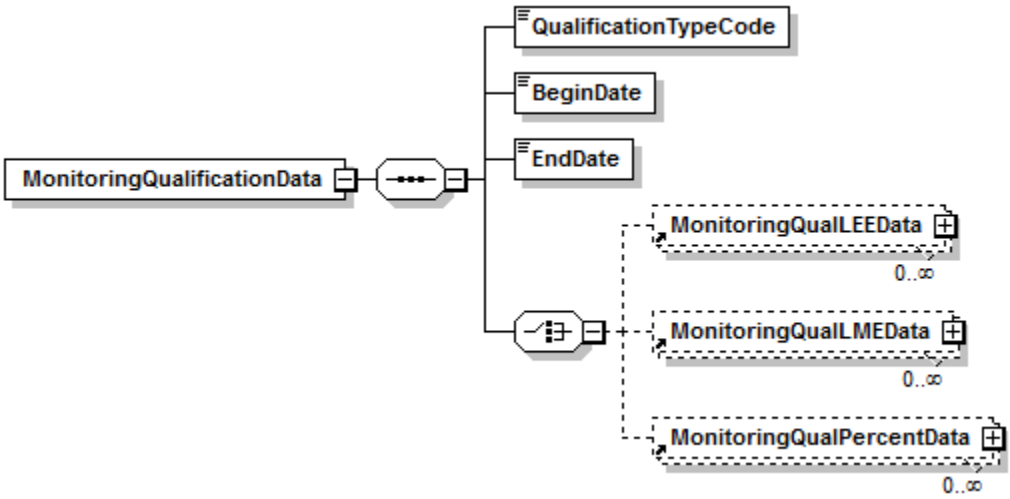

Dependencies for *Monitoring Qualification Data*

The MONITORING QUALIFICATION DATA record is dependent on the UNIT DATA record or the STACK PIPE DATA record.

The following complex elements specify additional qualification data and are dependent on the MONITORING QUALIFICATION DATA record:

- **MONITORING QUAL LME DATA**
- **MONITORING QUAL PERCENT DATA**
- **MONITORING QUAL LEE DATA**

The complex elements *cannot* be submitted for a monitoring plan unless an applicable MONITORING QUALIFICATION DATA record is included.

Monitoring Qualification Data XML Elements

Qualification Type Code *(QualificationTypeCode)*
Report a code from the Table 65 specifying the type of qualification being sought:

Table 65: Qualification Type Codes and Descriptions

Category	Code	Description
Low-emitting EGU (LEE)— Hg or HCl	LEE	LEE qualification
Gas-Fired	GF	Gas-Fired Qualification
Low Mass Emitter	LMEA	Low Mass Emitter Qualification (Annual) -- Required when reporting on a year-round basis
	LMES	Low Mass Emitter Qualification (Ozone Season) -- Required when subject to an Ozone-Season NO_x program
Peaking	PK	Peaking Unit Qualification (Annual)
	SK	Peaking Unit Qualification for Ozone Season (applies exclusively to sources that report on an ozone season-only basis)
QA Test Exemption	PRATA1	Single Load RATA Qualification by petition approval
	PRATA2	Two Load RATA Qualification by petition approval
	COMPLEX	Exemption from Flow-to-Load Testing Due to Complex Configuration
	LOWSULF	SO_2 RATA Exemption for a Source Combusting Only Very Low Sulfur Fuel
MATS Emissions Averaging	HGAVG	MATS-affected unit in an emission averaging group

Begin Date *(BeginDate)*
Report the date on which qualification will become effective.

For gas-fired and peaking unit qualifications and for LME, LEE, and HGAVG qualifications, this should equal the first date on which the qualification is needed for monitoring and reporting purposes. It must be no later than the begin date of any MONITORING METHOD DATA record that depends on the qualification.

For Flow RATA qualifications, this date should be equal to or earlier than the first RATA which relies on the petition provisions.

For Flow-to-Load exemptions, this date should be equal to the completion date of the first flow RATA that qualifies for the exemption.

End Date *(EndDate)*
If applicable, report the date on which the qualification ended.

For gas-fired and peaking unit qualifications and for LME and LEE qualifications, this would be the last day of the calendar year (or ozone season) in which the qualification was lost. This date triggers the requirement to meet new monitoring and reporting requirements within the specified time allowed by Part 75 or the MATS Rule.

For HGAVG qualifications, this would be the last day the unit was associated with an emission averaging group.

Specific Considerations

Optional Reporting of LEE Qualification Data
For units that qualify for and elect to use the LEE compliance option for Hg or HCl, EPA strongly encourages you to report an optional Hg or HCl LEE qualification record. Although reporting of this record is not required, if reported, it must be filled out correctly and completely.

14.1 Monitoring Qual LME Data

Monitoring Qual LME Data Overview

Report MONITORING QUALIFICATION DATA records to provide the initial evidence that a unit qualifies for low mass emissions (LME) status. If the unit reports on a year-round basis, report a MONITORING QUALIFICATION DATA record with a QualificationTypeCode of "LMEA" and three supporting MONITORING QUAL LME DATA records (one for each required QualificationDataYear). If the unit is subject to an ozone-season NO_x program, report a MONITORING QUALIFICATION DATA record with a QualificationTypeCode of "LMES" and three supporting MONITORING QUAL LME DATA records (one for each required QualificationDataYear).

If the unit reports on a year-round basis and is also subject to an ozone-season NO_x program, the unit must report both sets of records and meet both the annual and ozone-season emissions limits to qualify for LME status.

See Table 66 for more information about which MONITORING QUALIFICATION DATA records to report and which elements must be filled out in the associated MONITORING QUAL LME DATA records.

Table 66: Data Requirements for Monitoring Qual LME

Reporting Frequency	Program Applicability	Linked to MONITORING QUALIFICATION DATA Record with QualificationTypeCode:			
		LMEA		LMES	
		SO_2 Tons	NO_x Tons	SO_2 Tons	NO_x Tons
Annual	Subject to Acid Rain Program (or CSSO2G1/ CSSO2G2 plus CSNOX), but not subject to Ozone Season NO_x program	✓	✓	Do not report LMES record	
	Subject to Acid Rain Program (or CSSO2G1/ CSSO2G2 plus CSNOX), and also subject to Ozone Season NO_x program	✓	✓	--	✓
	Subject toCSSO2G1/ CSSO2G2, but not subject to any NO_x program	✓	--	Do not report LMES record	
	Subject to Ozone Season NO_x program and reporting year-round, but not subject to CSSO2G1/ CSSO2G2	--	✓	--	✓
	Subject to CSNOX, but not subject to CSSO2G1/ CSSO2G2or Ozone Season NO_x program	--	✓	Do not report LMES record	
Ozone Season Only	Subject to Ozone Season NO_x program and reporting during Ozone Season only	Do not report LMEA record		--	✓

Monitoring Qual LME Data XML Model

Figure 25: *Monitoring Qual LME Data* XML Elements

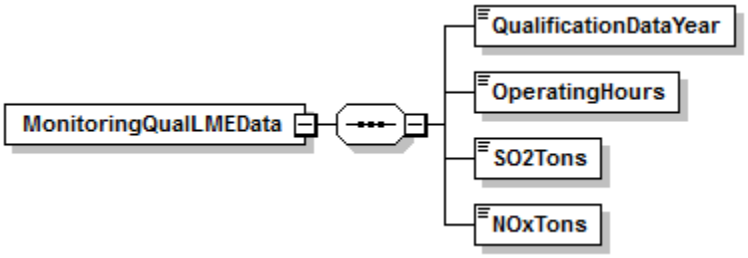

Dependencies for *Monitoring Qual LME Data*

The MONITORING QUAL LME DATA record is dependent on the MONITORING QUALIFICATION DATA record.

No other records are dependent upon the MONITORING QUAL LME DATA record.

Monitoring Qual LME Data XML Elements

Qualification Data Year *(QualificationDataYear)*
Report the calendar year used for the measured, estimated, or projected SO_2 and/or NO_x mass emissions.

Operating Hours *(OperatingHours)*
Report the number of unit operating hours (as defined in §72.2) for the Qualification Data Period (i.e., full year or ozone season) in the Qualification Data Year.

SO_2 Tons *(SO2Tons)*
If this record is linked to a MONITORING QUALIFICATION DATA record with a QualificationTypeCode of "LMEA," and the unit is subject to an SO_2 program, report the SO_2 mass emissions for the Qualification Data Year based on either measured or estimated SO_2 mass emissions or projected SO_2 mass emissions, as appropriate according to § 75.19. Round and report this value to one decimal place.

Otherwise, leave this field blank.

NO_x Tons *(NOxTons)*
If this record is linked to a MONITORING QUALIFICATION DATA record with a QualificationTypeCode of "LMEA," and the unit is subject to a NO_x program and is reporting year-round, report the annual NO_x mass emissions for the Qualification Data Year based on either measured or estimated NO_x mass emissions or projected NO_x mass emissions, as appropriate according to §75.19. Round and report this value to one decimal place.

If this record is linked to a MONITORING QUALIFICATION DATA record with a QualificationTypeCode of "LMES," and the unit is subject to an ozone-season NO_x program, report the seasonal NO_x mass emissions for the Qualification Data Year based on either measured or estimated NO_x mass emissions or projected NO_x mass emissions, as appropriate according to §75.19. Round and report this value to one decimal place.

Otherwise, leave this field blank.

Specific Considerations

SO_2 Mass Emissions Reduction Program Units
Use this record type to qualify as a low mass emissions unit by demonstrating that the unit emits no more than 25 tons of SO_2 per year.

NO_x Mass Emissions Reduction Program Units

- For a unit subject to a program with a seasonal NO_x emission cap, use this record type to qualify as a low mass emissions unit by demonstrating that the unit emits no more than 50 tons of NO_x per ozone season.
- For a unit that reports NO_x mass emission data year-round, use this record to qualify as a low mass emissions unit by demonstrating that the unit emits < 100 tons of NO_x per year.

Data Projections

Projections may be used, as necessary, for Year 1, Year 2, or Year 3 (or for Ozone Season 1, 2, or 3), when:

- Actual measured data (e.g., EDR reports) or reasonable estimates of actual emissions derived from other sources (e.g., Part 60 monitoring data, process operating data, fuel usage records, etc.) are not available (e.g., for a new unit);
- One or more of the past three years is not representative of current unit operation (e.g., if controls were recently installed); or
- The owner or operator takes a federally enforceable permit restriction on unit operating hours.

Historical Data

- If only historical data are being used to qualify, Year 1 would be three years before the Qualification Data Year (i.e., the year of the LME application (see §75.19(a)(2)).
- If only projected data are being used, Year 1 would be the calendar year of the Qualification Data Year (i.e., the year of the LME application).
- If only historical data are being used, Year 3 would be one year before the Qualification Data Year or if only projected data were being used, Year 3 would be two years after the Qualification Data Year (i.e., the year of the LME application).
- The appropriate calendar years for Ozone Seasons 1, 2, and 3 are determined in a similar manner.

LME Attainment Failure

- If a qualifying LME unit emits more than the allowable number of tons of SO_2 or NO_x in a particular year or ozone season, the unit loses its LME status. Should this occur, the owner or operator must install and certify monitoring systems in a timely manner, as described in §75.19(b)(2).
- If LME status is lost, update the MONITORING QUALIFICATION DATA record by completing the end date. Also submit a MONITORING METHOD DATA record indicating changes in monitoring methodologies with the appropriate effective dates.

LME Emission Testing

For information on emission testing of a group of identical LME units, refer to the UNIT DEFAULT TEST SUMMARY DATA record instructions in the QA Certification Data section of the reporting instructions.

Updating the *Monitoring Qual LME Data* Record

This record is not designed to be updated from year to year. Rather, ongoing LME status is demonstrated by the cumulative SO_2 and NO_x mass emissions reported in the hourly emissions records. Changes to this data should only be necessary if the unit loses its LME status or needs additional qualification records based on a change in program applicability or a change in reporting frequency.

14.2 Monitoring Qual Percent Data

Monitoring Qual Percent Data Overview

Report this record in conjunction with the MONITORING QUALIFICATION DATA record to support the qualifications of a peaking unit or gas-fired unit. For any year or ozone season in which a unit qualifies as a peaking or gas-fired unit, submit a MONITORING QUAL PERCENT DATA record documenting the capacity or fuel usage of the unit during a three year period. "Peaking unit" is defined in 40 CFR 72.2 for an annual basis and is described in 40 CFR 75.74(c)(11) for an ozone season basis. "Gas-fired" is defined in 40 CFR 72.2. Do this for any regulatory purpose (i.e., either for the selection of monitoring methodology, exemption from multi-load testing, or frequency of on-going QA/QC activities).

Monitoring Qual Percent Data XML Model

Figure 26: *Monitoring Qual Percent Data* XML Elements

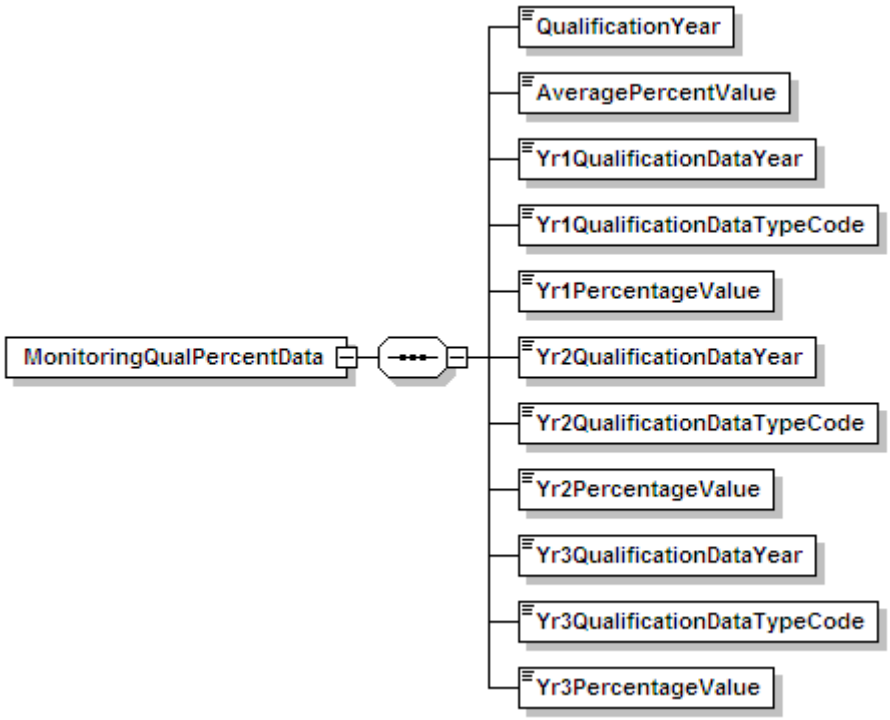

Dependencies for *Monitoring Qual Percent Data*

The MONITORING QUAL PERCENT DATA record is dependent on the MONITORING QUALIFICATION DATA record.

No other records are dependent upon the MONITORING QUAL PERCENT DATA record.

Monitoring Qual Percent Data XML Elements

Qualification Year *(QualificationYear)*
Report the year for which qualification is sought.

Average Percentage Value *(AveragePercentageValue)*
Report the average of the three years' Percentage Values.

Year 1 Qualification Data Year *(Yr1QualificationDataYear)*
Report the calendar year or season represented by Year 1.

Year 1 Qualification Data Type Code *(Yr1QualificationDataTypeCode)*
Report one of the following codes that describe the type of percent data for Year 1 supporting qualification as a peaking unit or gas-fired unit:

Table 67: Qualification Data Type Codes and Descriptions

Code	Description
A	Actual Percent Capacity Factor or Fuel Usage
P	Projected Capacity Factor or Fuel Usage
D	720 Hours of Unit Operating Data (gas-fired only)

Year 1 Percentage Value *(Yr1PercentageValue)*
Report the percent capacity factor or the percent of heat input from gaseous fuel for Year 1.

Year 2 Qualification Data Year *(Yr2QualificationDataYear)*
Report the calendar year or season represented by Year 2.

Year 2 Qualification Data Type Code *(Yr2QualificationDataTypeCode)*
Report one of the codes from Table 65, above, that describes the type of percent data for Year 2 supporting qualification as a peaking unit or gas-fired unit:

Year 2 Percentage Value *(Yr2PercentageValue)*
Report the percent capacity factor or the percent of heat input from gaseous fuel for Year 2.

Year 3 Qualification Data Year *(Yr3QualificationDataYear)*
Report the calendar year or season represented by Year 3.

Year 3 Qualification Data Type Code *(Yr3QualificationDataTypeCode)*
Report one of the codes from Table 65, above, that describes the type of percent data for Year 3 supporting qualification as a peaking unit or gas-fired unit:

Year 3 Percentage Value *(Yr3PercentageValue)*
Report the percent capacity factor or the percent of heat input from gaseous fuel for Year 3.

Specific Considerations

Qualifying Using Historical and/or Projected Data

- Provide three years of historical percent capacity factor or fuel usage information using projected data as provided for in the definitions of gas-fired and peaking unit in §72.2.

- For a unit in a NO_x mass emissions reduction program reporting on an ozone season-only basis, provide ozone season capacity factor information for the period from May 1 through September 30 of each year. Year 1 should be the earliest year for which data are reported (for example, if all historical data are being used, Year 1 would be three years before the current calendar year or, if all projected data were being used, Year 1 would be the current calendar year). Similarly, Year 3 should be the last year for which data are reported (for example, if all historical data are being used, Year 3 would be one year before the current calendar year or if all projected data were being used, Year 3 would be two years after the current calendar year).
- Calculate the three year average annual capacity factor or percentage of the annual heat input (HI) from the combustion of gaseous fuel, by averaging the percent capacity factor (or percent of HI from gaseous fuel) for the three years of data provided. For example, if a unit has operated for three years at 6.0 percent, 10.0 percent, and 12.0 percent annual capacity factor, report each of these values as a Percentage Value element.

Table 68: Example Data for Qualification Based on Historical and Projected Data

Initial Qualifying Methodology	Data Reported in MONITORING QUAL PERCENT DATA Record						
	Current Year	Year 1	Type*	Year 2	Type*	Year 3	Type*
Actual Historical Data	2000	1997	A	1998	A	1999	A
	2001	1998	A	1999	A	2000	A
	2002	1999	A	2000	A	2001	A
Projected Data	2000	2000	P	2001	P	2002	P
	2001	2000	A	2001	P	2002	P
	2002	2000	A	2001	A	2002	P
	2003	2000	A	2001	A	2002	A
Combination of Actual Historical Data and Projected Data	2001	2000	A	2001	P	2002	P
	2002	2000	A	2001	A	2002	P
	2003	2000	A	2001	A	2002	A

* A = Actual historical data; P = Projected data

Peaking and Gas-Fired Unit Qualification

If reporting to qualify both as a peaking unit and as a gas-fired unit, submit two MONITORING QUALIFICATION DATA records, one with QualificationTypeCode of GF (gas-fired) and one with QualificationTypeCode of PK or SK. With each, report the appropriate MONITORING QUAL PERCENT DATA record to demonstrate that the unit meets the gas-fired or peaking unit criteria.

Qualifications for Gas-Fired Units

- In accordance with paragraph (3)(ii)(B) of the "gas-fired" definition in §72.2, 720 hours of unit operating data may be provided to initially qualify as a gas-fired unit, if the designated representative certifies that the pattern of fuel usage has permanently changed.

- A unit is classified as gas-fired as of the date on which the results of the 720-hour demonstration are submitted to the Administrator (see paragraph (3)(iii) of "gas-fired" definition). The 720-hour demonstration data qualifies a unit as gas-fired from the date on which the results of the demonstration are submitted until the end of that same calendar year.
- For the next year, actual, historical fuel usage data must be submitted from the previous year (beginning with the date on which gas-fired qualification was first met) to verify that fuel usage requirements were met for the first reporting year.
- For example, if qualified based on the 720-hour demonstration as of June 30, 2000, then, in 2001, historical data must be submitted for the time interval from June 30, 2000 through December 31, 2000 (labeled as Year 1). In 2002, historical data would be submitted for 2000 (labeled as Year 1) and 2001 (labeled as Year 2). In 2003, historical data would be submitted for 2000, 2001, and 2002, labeled as Year 1, Year 2, and Year 3, respectively (see Table 69, below).

Table 69: Example of Gas-Fired Qualification Based on Unit Operating Data

Initial Qualifying Methodology	Data Reported in MONITORING QUAL PERCENT DATA Record						
	Current Year	Year 1	Type	Year 2	Type	Year 3	Type
Qualifying Based on 720 Hours of Unit Operating Data After the first year, available historical data must be provided.	2000	2000	D**	2001	P	2002	P
	2001	2000	A	2001	P	2002	P
	2002	2000	A	2001	A	2002	P
	2003	2000	A	2001	A	2002	A

** Initial qualification based on 720 hours of unit operating data

Initial and Subsequent Qualification

It is possible a unit may initially qualify as a gas-fired or peaking unit by using historical data or projected data. A combination of historical and projected data may be used. However, to maintain peaking unit or gas-fired unit status, actual capacity factor or fuel usage data for each subsequent year must be reported. Thus, if the basis for qualifying in the first reporting year is on three years of projections, it is not possible to re-qualify in the second reporting year based solely on projections. The qualifying data for the second reporting year must include the actual capacity factor or fuel usage data from the first reporting year.

Loss of Status

- If, after evaluating the capacity factor or fuel usage data for a particular reporting year, the unit no longer qualifies as a peaking or gas-fired unit, update the MONITORING QUAL DATA record by reporting the appropriate End Date, to indicate that the peaking or gas-fired unit status has been lost.
- If a unit has previously qualified as a peaking or gas-fired unit but has lost that status and re-establishing peaking or gas-fired status is wished, the unit may <u>only</u> re-qualify based

on three years of actual historical data. The use of projections is disallowed in such cases (see §72.2, paragraph (4) of "gas-fired" definition and paragraph (3) of the "peaking unit" definition).

Updating the MONITORING QUAL PERCENT DATA Record

For each unit, as applicable, add another MONITORING QUAL PERCENT DATA record at the beginning of each calendar year (for year-round reporters) or at the start of the ozone season (for ozone season-only reporters) to demonstrate on-going qualification, based on the previous year (or ozone season) of historical data.

14.3 Monitoring Qual LEE Data

Monitoring Qual LEE Data Overview

For EGUs subject to the MATS Rule, you are encouraged to report a MONITORING QUAL LEE DATA record to provide initial and on-going evidence that an existing EGU (or a group of EGUs sharing a common stack) qualifies as a low-emitter of Hg or HCl under 40 CFR 63.10005(h). Note, however, that for HCl, this record applies only to coal-fired, petroleum coke-fired, and IGCC EGUs.

(Note: For Hg, use of the LEE methodology is restricted to existing EGUs and is prohibited for scrubbed units with main stack and bypass stack configurations). For HCl, the LEE option is available for both new and existing EGUs).

For an EGU with a single unit-single stack configuration, the LEE methodology may be used if it is demonstrated either that:

- The unit's potential to emit is less than 29.0 lb of Hg per year; or
- The unit's Hg emission rate is less than 10% of the applicable emission standard in Table 2 of 40 CFR Part 63, Subpart UUUUU.

A candidate EGU must undergo a 30 operating day demonstration test using EPA Method 30B (for Hg concentration) together with other measured parameters to show that the unit qualifies as a LEE. To retain LEE status, the demonstration test must be repeated annually.

For a group of candidate units that share a common stack, you may either perform the 30 operating day demonstration test on each individual unit or test at the common stack.

- If the common stack testing option is chosen, the individual units sharing the stack will qualify as LEEs if:
    - The average Hg emission rate from the test is < 10% of the applicable emission standard; or
    - The average Hg emission rate from the test meets the applicable emission standard and the calculated annual Hg mass emissions from the group of units do not exceed 29.0 lb times the number of units sharing the stack.
- If the group of units sharing the stack qualifies for LEE status, report a MONITORING QUAL LEE DATA record for the common stack.

For a candidate EGU with a multiple stack or duct exhaust configuration (excluding scrubbed units with a main stack and bypass stack), you must separately test each stack or duct. The unit qualifies for LEE status if:

- The Hg emission rate is < 10% of the applicable Hg emission standard at all of the stacks or ducts; or
- The sum of the calculated annual Hg mass emissions from all of the stacks or ducts does not exceed 29.0 lb.

The LEE methodology for HCl may be used if performance test results show that the HCl emissions are less than 50 percent of the applicable limit in Table 1 or Table 2 of Subpart UUUUU for 3 consecutive years.

Monitoring Qual LEE Data XML Model

Figure 27: *Monitoring Qual LEE Data* XML Elements

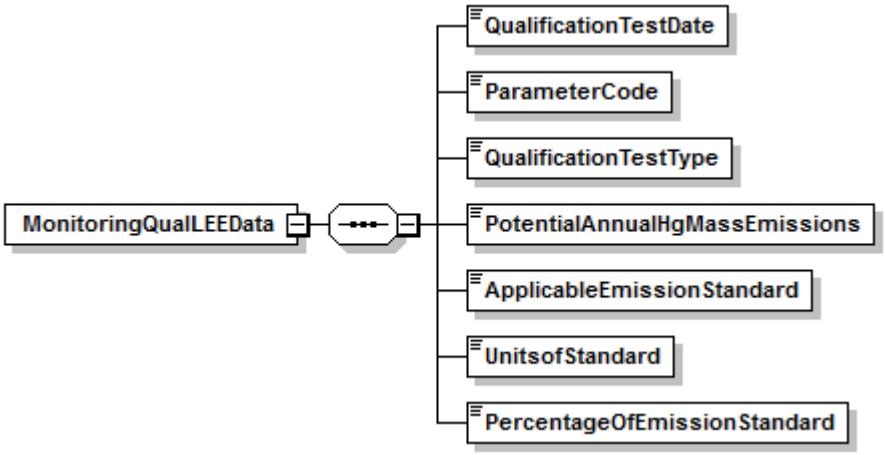

Dependencies for *Monitoring Qual LEE Data*

The MONITORING QUAL LEE DATA record is dependent on the MONITORING QUALIFICATION DATA record.

No other records are dependent upon the MONITORING QUAL LEE DATA record.

Monitoring Qual LEE Data XML Elements

Qualification Test Date *(QualificationTestDate)*
For Hg, report the end date (MMDDYYYY) of the demonstration test (i.e., either the initial LEE qualifying test or the latest retest, as applicable) showing that the unit (or group of units sharing a common stack) qualifies to use the LEE methodology.

For HCl, report the end date (MMDDYYYY) of the performance test that completes the 3-year demonstration for LEE qualification.

Parameter Code *(ParameterCode)*
Report the appropriate Parameter code (HG or HCL) associated with the LEE qualification.

Qualification Test Type *(QualificationTestType)*
Indicate whether the LEE qualification test is the initial 30 operating day demonstration test or a retest. Report "INITIAL" if it is the initial test and "RETEST" if it is a retest.

Potential Annual Hg Mass Emissions *(PotentialAnnualHgMassEmissions)*
If the unit (or group of units sharing a common stack) seeks to qualify for the LEE methodology based on its potential annual Hg mass emissions, report the calculated annual emissions in pounds (rounded off to one decimal place). Calculate the potential annual Hg mass emissions according to 40 CFR 63.10005(h). Leave this field blank if LEE qualification for Hg is based on emitting at less than 10% of the applicable emission standard.

Applicable Emission Standard *(ApplicableEmissionStandard)*
If the unit (or group of units sharing a common stack) seeks to qualify as a LEE by emitting at less than 10% of the applicable Hg emission standard, specify the numerical value of that standard. This field should be reported in standard notation and not scientific notation. Leave this field blank if LEE qualification is based on the potential annual Hg mass emissions.

Units of Standard *(UnitsofStandard)*
If the unit (or group of units sharing a common stack) seeks to qualify for LEE by emitting at less than 10% of the applicable Hg emission standard or less than 50% of the applicable HCl emission standard, specify the units of measure of that standard. Report "LBTBTU" if the units of the standard are lb/TBtu, "LBMBTU" if the units of the standard are lb/mmBtu, "LBMWH" if the units of the standard are lb/MWh, and "LBGWH" if the units of the standard are lb/GWh. Leave this field blank if Hg LEE qualification is based on the potential annual Hg mass emissions.

Percentage of Emission Standard *(PercentageOfEmissionStandard)*
If the unit (or group of units sharing a common stack) qualifies for LEE based on emitting at less than 10% of the applicable Hg emission standard or less than 50% of the applicable HCl emission standard, report the results of the demonstration test (or retest) as a percentage of the standard, rounded to one decimal place. Leave this field blank if Hg LEE qualification is based on the potential annual Hg mass emissions.

Specific Considerations

Loss of LEE Status

- If the annual retest of a LEE (or group of LEEs sharing a common stack) shows that the unit (or group of units) no longer qualifies for Hg LEE status, the owner or operator must install and certify Hg CEMS or sorbent trap monitoring system(s) within 6 months (see section 63.10006(b)(2) of Subpart UUUUU).
- If the triennial (i.e., once every 3 years) HCl retest of a LEE shows that the unit no longer qualifies for HCl LEE status, the owner or operator must conduct quarterly emissions testing for HCl.
- If LEE status is lost, update the MONITORING QUALIFICATION DATA record by completing the end date. Also submit MONITORING METHOD DATA or SUPPLEMENTAL MATS MONITORING METHOD DATA records (as applicable), indicating changes in monitoring methodologies with the appropriate effective dates (see Sections 6.0 and 6.1, above). Note that reporting of SUPPLEMENTAL MATS MONITORING METHOD DATA records is optional.

Updating the *Monitoring Qual LEE Data* Record

For a unit (or group of units sharing a common stack) that initially qualifies for LEE status, the MONITORING QUAL HG LEE DATA record must be updated annually (for Hg) or every three years (for HCl), based on the results of each required retest.