ECMPS Reporting Instructions
Quality Assurance and Certification

United States Environmental Protection Agency
Office of Air and Radiation
Clean Air Markets Division
1201 Constitution Ave, NW
Washington, DC 20004

March 3, 2021

Table of Contents

Page

1.0 Introduction: Quality Assurance and Certification 1
1.1 QUALITY ASSURANCE AND CERTIFICATION ROOT ELEMENT 5
1.2 TEST SUMMARY DATA ELEMENTS 6
2.0 CEM Tests 9
2.1 7-DAY CALIBRATION ERROR TEST 9
2.1.1 Test Summary Data Elements for 7-Day Calibration 12
2.1.2 Calibration Injection Data 15
2.2 CYCLE TIME TEST 18
2.2.1 Test Summary Data Elements for Cycle Time Test 21
2.2.2 Cycle Time Summary Data 23
2.2.3 Cycle Time Injection Data 24
2.3 LINEARITY CHECK DATA (SO_2, NO_X, CO_2, AND O_2) 26
2.3.1 Test Summary Data Elements for Linearity 30
2.3.2 Linearity Summary Data 32
2.3.3 Linearity Injection Data 34
2.3.4 Linearity Protocol Gas Data 35
2.4 HG LINEARITY AND 3-LEVEL SYSTEM INTEGRITY CHECK DATA 38
2.4.1 Test Summary Data Elements for Hg Linearity and System Integrity 41
2.4.2 Hg Summary Data 43
2.4.3 Hg Injection Data 45
2.5 RELATIVE ACCURACY TEST AUDIT (RATA) 46
2.5.1 Test Summary Data Elements for RATA 53
2.5.2 RATA Data 55
2.5.3 RATA Summary Data 57
2.5.4 RATA Run Data 64
2.5.5 Flow RATA Run Data 67
2.5.6 RATA Traverse Data 70
2.5.7 RATA Test Qualification Data 74
2.5.8 RATA Protocol Gas Data 77
2.5.9 RATA Air Emission Testing Data 79
2.6 FLOW-TO-LOAD REFERENCE 81
2.6.1 Test Summary Data Elements for Flow-to-Load Reference 84
2.6.2 Flow-to-Load Reference Data 86
2.7 FLOW-TO-LOAD CHECK 88
2.7.1 Test Summary Data Elements for Flow-to-Load Check 91
2.7.2 Flow-to-Load Check Data 93
2.8 ONLINE OFFLINE CALIBRATION ERROR DEMONSTRATION 96
2.8.1 Test Summary Data Elements for Online Offline Calibration 99
2.8.2 Online Offline Calibration Data 102
3.0 Non-CEM Tests 106
3.1 APPENDIX E CORRELATION TEST 106
3.1.1 Test Summary Data Elements for Appendix E Correlation Test 109
3.1.2 Appendix E Correlation Test Summary Data 111
3.1.3 Appendix E Correlation Test Run Data 112

3.1.4 Appendix E Heat Input from Oil Data 114
3.1.5 Appendix E Heat Input from Gas Data 117
3.1.6 Appendix E Protocol Gas Data 118
3.1.7 Appendix E Air Emission Testing Data 120
3.2 FUEL FLOWMETER ACCURACY TEST 122
3.2.1 Test Summary Data Elements for Fuel Flowmeter Accuracy 125
3.2.2 Fuel Flowmeter Accuracy Data 127
3.3 TRANSMITTER TRANSDUCER TEST 129
3.3.1 Test Summary Data Elements for Transmitter Transducer Test 132
3.3.2 Transmitter Transducer Data 134
3.4 FUEL FLOW-TO-LOAD BASELINE 136
3.4.1 Test Summary Data Elements for Fuel Flow-to-Load Baseline 139
3.4.2 Fuel Flow-to-Load Baseline Data 141
3.5 FUEL FLOW-TO-LOAD TEST 144
3.5.1 Test Summary Data Elements for Fuel-Flow-to-Load Test 147
3.5.2 Fuel Flow-to-Load Test Data 149
3.6 UNIT DEFAULT TEST (LME) 151
3.6.1 Test Summary Data Elements for LME Unit Default Test 154
3.6.2 Unit Default Test Data 156
3.6.3 Unit Default Test Run Data 158
3.6.4 Unit Default Protocol Gas Data 160
3.6.5 Unit Default Air Emission Testing Data 162
4.0 Miscellaneous Tests 164
5.0 QA Certification Event Data 169
6.0 Test Extension Exemption Data 180

List of Tables

Page

Table 1: 7-Day Calibration Test Reason Codes and Descriptions....12
Table 2: 7-Day Calibration Test Result Codes and Descriptions....13
Table 3: Injection Protocol Codes and Descriptions....14
Table 4: Cycle Time Test Reason Codes and Descriptions....21
Table 5: Cycle Time Test Result Codes and Descriptions....22
Table 6: Linearity Test Reason Codes and Descriptions....30
Table 7: Linearity Test Result Codes and Descriptions....31
Table 8: Linearity Gas Level Codes and Descriptions....32
Table 9: PGVP Gas Type Codes and Descriptions....35
Table 10: Hg Linearity or 3-Level System Integrity Check Reason Codes and Descriptions....41
Table 11: Hg Linearity or 3-Level System Integrity Check Result Codes and Descriptions....42
Table 12: Linearity and 3-Level System Integrity Check Gas Level Codes and Descriptions....43
Table 13: RATA Test Reason Codes and Descriptions....53
Table 14: RATA Test Result Codes and Descriptions....54
Table 15: RATA Frequency Codes and Descriptions....56
Table 16: RATA Operating Level Codes and Descriptions....58
Table 17: Reference Method Codes for Gas System RATAs....58
Table 18: Reference Method Codes for Flow RATAs....60
Table 19: RATA Run Status Codes and Descriptions....66
Table 20: Reference Method Probe Type Codes and Descriptions....70
Table 21: Pressure Measure Codes and Descriptions....71
Table 22: RATA Test Claim Codes and Descriptions....75
Table 23: Flow-to-Load Test Result Codes and Descriptions....91
Table 24: Test Basis Indicator Codes and Descriptions for Flow-to-Load Check....93
Table 25: Online Offline Calibration Test Reason Codes and Descriptions....99
Table 26: Online Offline Calibration Test Result Codes and Descriptions....100
Table 27: Appendix E Test Reason Codes and Descriptions....109
Table 28: Oil GCV Units of Measure Codes and Descriptions....115
Table 29: Oil Volume Units of Measure Codes and Descriptions....115
Table 30: Oil Density Units of Measure Codes and Descriptions....116
Table 31: Fuel Flowmeter Accuracy Test Reason Codes and Descriptions....125
Table 32: Fuel Flowmeter Accuracy Test Result Codes and Descriptions....126
Table 33: Accuracy Test Method Codes and Descriptions....127
Table 34: Transmitter Transducer Test Reason Codes and Descriptions....132
Table 35: Transmitter Transducer Test Result Codes and Descriptions....133
Table 36: Accuracy Spec Codes and Descriptions....134
Table 37: Base Fuel Flow-to-Load Units of Measure Codes and Descriptions....142
Table 38: Baseline GHR Units of Measure Codes and Descriptions....143
Table 39: Fuel Flow-to-Load Test Result Codes and Descriptions....147
Table 40: LME Unit Default Test Reason Codes and Descriptions....154
Table 41: Fuel Codes and Descriptions for Unit Default Tests....156
Table 42: Unit Default Test Operating Condition Codes and Descriptions....157
Table 43: Miscellaneous Test Type Codes and Descriptions....166
Table 44: Miscellaneous Test Reason Codes and Descriptions....167
Table 45: Miscellaneous Test Result Codes and Descriptions....167

Table 46: QA or Certification Event Codes and Descriptions 172
Table 47: Required Test Codes and Descriptions.....176
Table 48: Fuel Codes and Descriptions for Test Extension Exemption 182
Table 49: Test Extension or Exemption Code.....183

List of Figures

Page

Figure 1: Quality Assurance and Certification Data Complex Elements....4
Figure 2: *Quality Assurance and Certification* XML Elements....5
Figure 3: *Test Summary Data* XML Elements....7
Figure 4: 7-Day Calibration Error Test XML Structure....10
Figure 5: *Calibration Injection Data* XML Elements....15
Figure 6: Cycle Time Test XML Structure....19
Figure 7: *Cycle Time Summary Data* XML Elements....23
Figure 8: *Cycle Time Injection Data* XML Elements....24
Figure 9: Linearity Checks XML Structure (Including: Test Summary Data, Linearity Summary Data, and Linearity Injection Data)....27
Figure 10: *Linearity Summary Data* XML Elements....32
Figure 11: *Linearity Injection Data* XML Elements....34
Figure 12: Linearity *Protocol Gas Data* XML Elements....35
Figure 13: Hg Linearity/System Integrity Check XML Structure....39
Figure 14: *Hg Summary Data* XML Elements....43
Figure 15: *Hg Injection Data* XML Elements....45
Figure 16: RATA XML Models....48
Figure 17: *RATA Data* XML Elements....55
Figure 18: *RATA Summary Data* XML Elements....57
Figure 19: *RATA Run Data* XML Elements....64
Figure 20: *Flow RATA Run Data* XML Elements....67
Figure 21: *RATA Traverse Data* XML Elements....70
Figure 22: *RATA Test Qualification Data* XML Elements....74
Figure 23: RATA *Protocol Gas Data* XML Elements....77
Figure 24: RATA *Air Emission Testing Data* XML Elements....79
Figure 25: Flow-to-Load Reference Data XML Structure....82
Figure 26: *Flow-to-Load Reference Data* XML Elements....86
Figure 27: Flow-to-Load Check XML Structure....89
Figure 28: *Flow-to-Load Check Data* XML Elements....93
Figure 29: Online Offline Calibration Error Demonstration XML Structure....97
Figure 30: *Online Offline Calibration Data* XML Elements....102
Figure 31: Appendix E Correlation Test XML Structure....107
Figure 32: *App E Correlation Test Summary Data* XML Elements....111
Figure 33: *App E Correlation Test Run Data* XML Elements....112
Figure 34: *Appendix E Heat Input from Oil Data* XML Elements....114
Figure 35: *Appendix E Heat Input from Gas Data* XML Elements....117
Figure 36: Appendix E *Protocol Gas Data* XML Elements....118
Figure 37: Appendix E *Air Emission Testing Data* XML Elements....120
Figure 38: Fuel Flowmeter Accuracy Test XML Structure....123
Figure 39: *Fuel Flowmeter Accuracy Data* XML Elements....127
Figure 40: Transmitter Transducer Accuracy Test XML Structure....130
Figure 41: *Transmitter Transducer Data* XML Elements....134
Figure 42: Fuel Flow-to-Load Baseline XML Structure....137
Figure 43: *Fuel Flow-to-Load Baseline Data* XML Elements....141
Figure 44: Fuel Flow-to-Load Test XML Structure....145

Figure 45: *Fuel Flow-to-Load Test Data* XML Elements 149
Figure 46: Unit Default Test XML Structure 152
Figure 47: *Unit Default Test Data* XML Elements 156
Figure 48: *Unit Default Test Run Data* XML Elements 158
Figure 49: *Unit Default Protocol Gas Data* XML Elements 160
Figure 50: Unit Default *Air Emission Testing Data* XML Elements.....162
Figure 51: Miscellaneous Tests XML Structure.....165
Figure 52: *QA Certification Event Data* XML Elements.....171
Figure 53: *Test Extension Exemption Data* XML Elements 181

ECMPS Reporting Instructions
Quality Assurance and Certification

1.0 Introduction: Quality Assurance and Certification

About This Document

In the Emissions Collection and Monitoring Plan System (ECMPS), data must be submitted to the EPA through the Client Tool using extensible-markup language (XML) format. XML files must contain certain data elements, which are defined in the XML schema. (Note: more information about the ECMPS XML Schemas can be found in the XML Schema Description Documents.)

The purpose of the reporting instructions is to provide the necessary information for owners and operators to meet the reporting requirements for sources affected by:

1) The Acid Rain Program (ARP);
2) The Cross-State Air Pollution Rule (CASPR);
3) The Mercury and Air Toxics Standards (MATS); and
4) Other programs required to report data using these XML schemas.

These instructions explain how to report the required data for the applicable regulations. Owners and operators of units should refer to the applicable regulations for information about what data are required to be reported.

The Quality Assurance and Certification XML Schema is made up of a root element, complex elements, and simple elements. A simple element is a single piece of data. A complex element is a group of simple elements which are logically grouped together. The root element is the base of the XML schema.

The elements are related to each other in parent-child relationships. The root element is the parent element of the entire schema. Complex elements are children of the root element, and complex elements can also be children of other complex elements. If a complex element is dependent on a parent complex element, the child complex element cannot be included in the XML file unless the appropriate parent complex element is also included. Figure 1 below illustrates the relationships between the QA and certification root element and the complex elements.

This document provides instructions on how the required data should be reported using this data structure. For each complex element, this document includes a separate section which includes:

- ***Element* Overview:** An overview of the kinds of data submitted under the element, including general guidance not specific to any associated child complex elements or simple elements
- ***Element* XML Model:** A model diagram of the element and any associated child complex elements or simple elements

- ***Element* XML Elements:** Instructions for submitting data for each associated simple element
- **Specific Considerations:** Additional considerations, including information that applies to particular types of monitoring plan configurations

About QA and Certification Data

QA and certification tests are required for all types of monitoring systems. Test extension or exemption data indicate variances from prescribed testing requirements or extensions to the normal QA testing schedule. QA or Certification Events (e.g., monitor replacements), as well as data elements for submitting an electronic certification application when certifications are required, are submitted when there is either diagnostic or recertification testing of specific monitoring systems or components.

QA and Certification Reporting Guidelines

All certification, recertification, and periodic quality assurance tests that affect data validation must be reported for each primary monitoring system, each redundant backup monitoring system, and each non-redundant backup system used to report data. For routine QA tests and diagnostics, the tests results may either be submitted prior to quarterly report submission period, or with the quarterly emissions file whose hourly data are affected by the test(s). For initial certification and recertification events, the test results must be submitted to EPA electronically within 45 days of completing all required tests.

Certification, Recertification and Diagnostic Tests

For initial certifications, recertifications, and for certain diagnostic tests, you must submit a corresponding QA CERTIFICATION EVENT DATA record along with the test results, to indicate the event that triggered the need for the tests, and which QA tests were required for that event (refer to the Part 75 Emissions Monitoring Policy Manual). Also, you will need to submit a QA CERTIFICATION EVENT DATA record whenever the conditional data validation procedures in §75.20(b)(3) are used for routine QA tests.

Aborted Tests

Report all QA tests that are discontinued due to problems with the monitoring systems. Also report the results of all trial RATA runs and gas injections that do not meet the acceptance criteria in §75.20(b)(3)(vii)(E). These are regarded as failed tests and trigger out-of-control periods.

However, do not report the results of tests that are discontinued for reasons unrelated to the monitors' performance (e.g., due to process upsets, unit outages, or reference method failures). And do not report the results of trial runs and gas injections that meet the acceptance criteria in §75.20(b)(3)(vii)(E), which are part of the process of optimizing the performance of a continuous emissions monitoring system (CEMS). The results of these tests are not used to establish the validity of hourly emissions data. Simply keep a record of them in the unit's test log.

Entering Test Run Times

When entering test run times for QA tests, use the same frame of reference for entering the end time as is used for the begin time. ECMPS assumes the run duration to be the difference between the reported end time and begin time for a run. For example, if a run is begun at 10:20:00 (hr:min:sec) and the run is 21 minutes long, ending at 10:40:59, then the begin time should be reported as 10:20 and the end time should be entered as 10:41 and not 10:40.

Test Calculations

Whenever you perform QA test calculations that involve a number of steps in sequence (e.g., linearity error or percent relative accuracy calculations), begin the calculation sequence with the raw data values reported in the XML (i.e., begin with flow rates that are rounded to the nearest 1000 scfh, gas concentrations that are rounded to the nearest 0.1 ppm, etc.). However, once you have begun the calculation sequence, do not round off any of the intermediate values (such as the mean difference, confidence coefficient, |R-A|, etc.). Rather retain the full decimal display of the computer in the intermediate values until the final result is obtained and then round off the final result. Similarly, do not use rounded intermediate values of statistical terms such as the standard deviation, mean difference, and confidence coefficient when you perform a bias test of a CEMS or determine a bias adjustment factor (BAF).

Figure 1: Quality Assurance and Certification Data Complex Elements

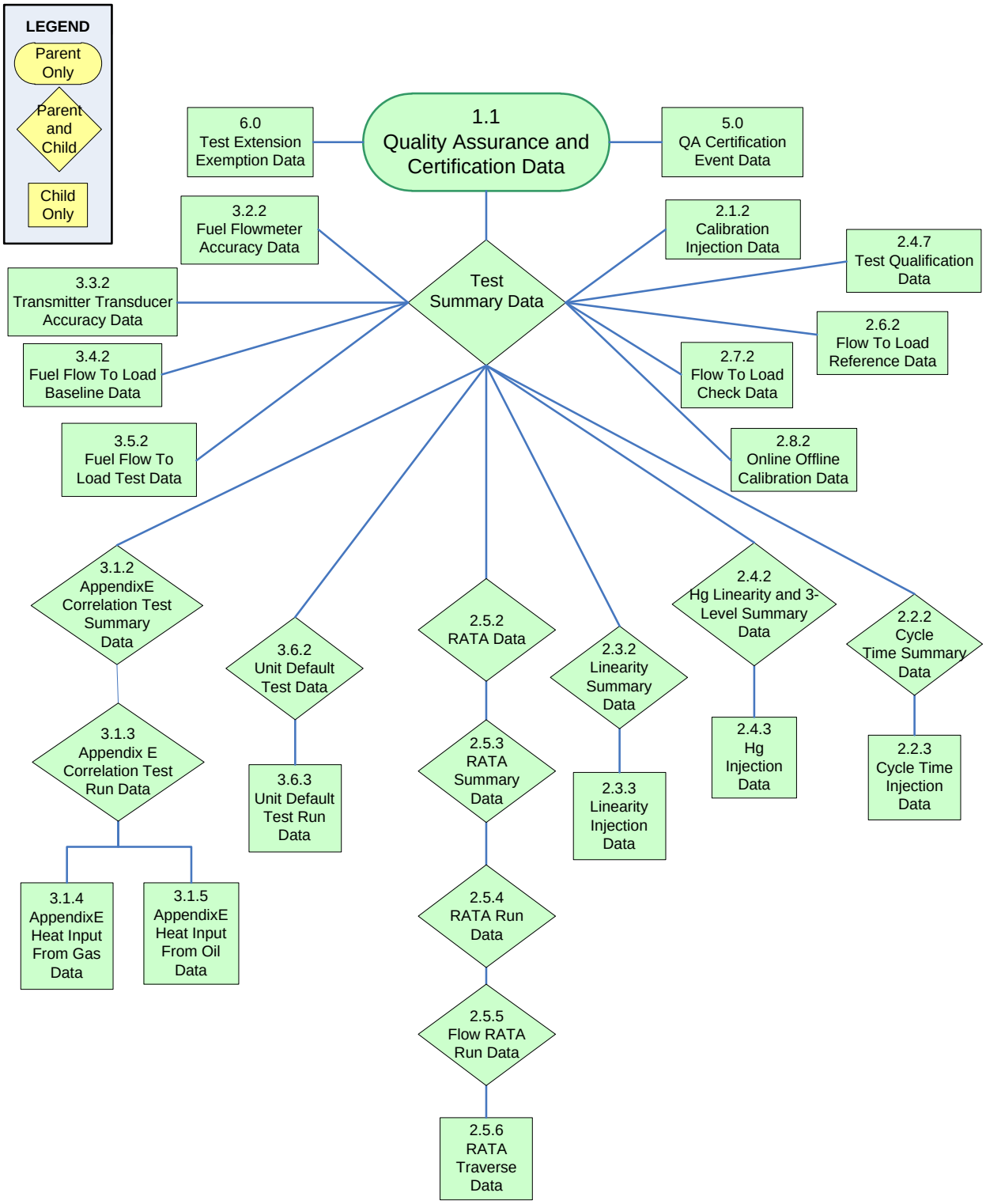

1.1 Quality Assurance and Certification Root Element

Quality Assurance and Certification Overview

The QUALITY ASSURANCE AND CERTIFICATION record is the root element for the Quality Assurance and Certification data XML schema. This element identifies the facility for which QA test data are being reported. In addition, it provides information about the XML Version. Include a single QUALITY ASSURANCE AND CERTIFICATION record in each Quality Assurance and Certification file.

Quality Assurance and Certification XML Model

Figure 2: *Quality Assurance and Certification* XML Elements

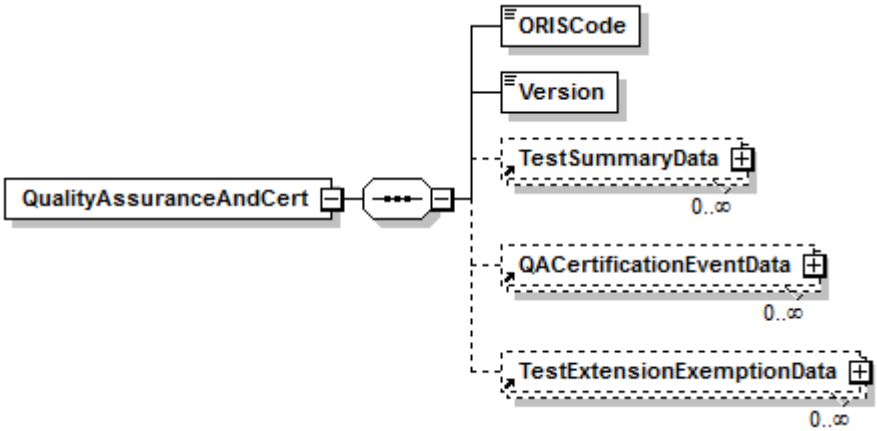

Quality Assurance and Certification XML Elements

ORIS Code *(ORISCode)*
Report the code that indicates the unique identifying number given to a plant by the Energy Information Administration (EIA).

Version *(Version)*
Report the XML schema version number. Note that this is a numeric field -- do not include a “v” before the number.

1.2 Test Summary Data Elements

Test Summary Data Overview

Submit one TEST SUMMARY DATA record for each periodic quality assurance, certification, and diagnostic test submitted as part of the QUALITY ASSURANCE AND CERTIFICATION test file. This record summarizes each test performed and provides the test results, the reason for the conducting each test, and other fundamental information about each test reported (e.g., Span Scale).

Some tests are quite simple and all the relevant data are reported in the TEST SUMMARY DATA record. For example, a Data Acquisition and Handling System (DAHS) verification or Primary Element Inspection (PEI) can be fully described in this record.

On the other hand, most tests have additional data such as gas injections or test runs that must be linked to the TEST SUMMARY DATA record. The more detailed test data (e.g., calibration injections for a 7-day calibration error test) are provided in separate complex elements, as listed below. Some of those dependent complex elements summarize the results that are specific to one level of a test (e.g., LINEARITY SUMMARY DATA) and have additional detailed records linked to them in dependent records defined in another complex element (e.g., LINEARITY INJECTION DATA). These relationships are depicted in the overall schematic (Figure 1) for QA CERTIFICATION DATA provided on the fourth page of this document.

In addition to “tests” of monitors or systems, there are also related sets of data that are required to qualify for a test or to use as a reference ratio for a test. These include the “reference” data for a flow-to-load check, the baseline data for a fuel-flow-to-load check, and the qualification data showing that only a single-load flow RATA is required based on the prior year's operation. This information should also be reported in a TEST SUMMARY DATA record and the related dependent records.

Test Summary Data XML Model

Figure 3: *Test Summary Data* XML Elements

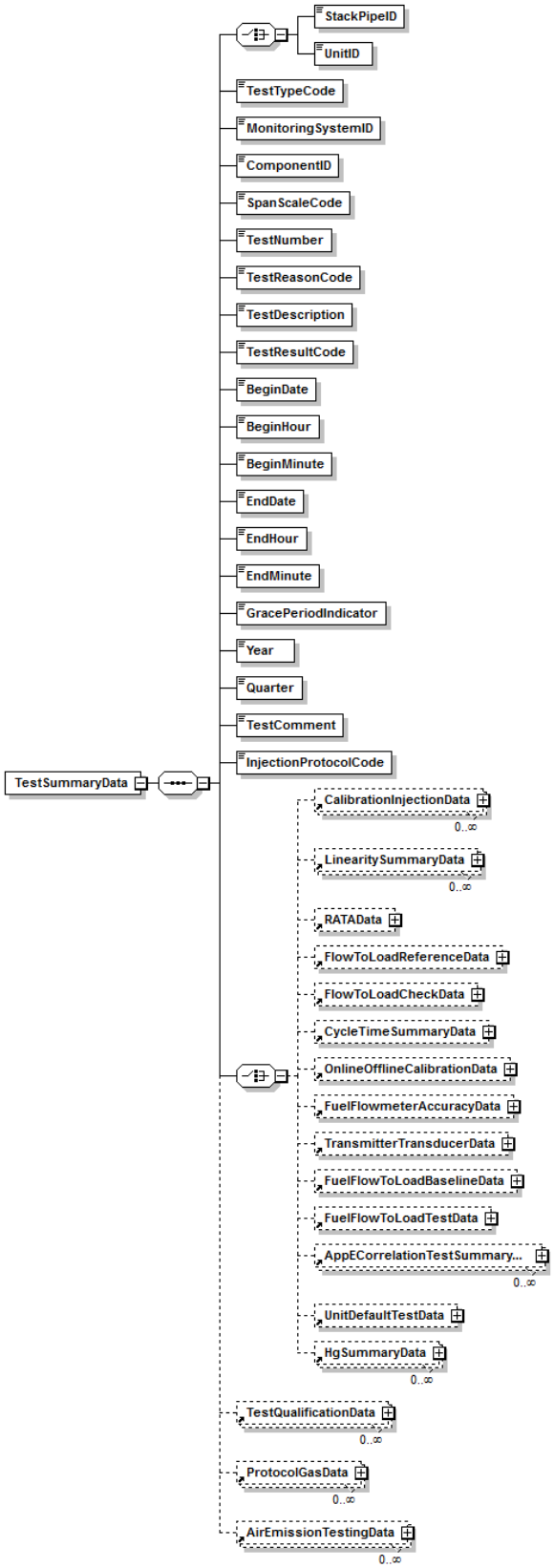

Instructions for completing each element of the TEST SUMMARY DATA record are included in the following discussions of the individual test types.

Dependencies for *Test Summary Data*

The TEST SUMMARY DATA record is dependent on the QUALITY ASSURANCE AND CERTIFICATION record.

The following complex elements specify additional test data and are dependent on the TEST SUMMARY DATA record:

- **LINEARITY SUMMARY DATA**
- **HG SUMMARY DATA**
- **RATA DATA**
- **FLOW-TO-LOAD REFERENCE DATA**
- **FLOW-TO-LOAD CHECK DATA**
- **CALIBRATION INJECTION DATA**
- **CYCLE TIME SUMMARY DATA**
- **ONLINE OFFLINE CALIBRATION DATA**
- **FUEL FLOWMETER ACCURACY DATA**
- **TRANSMITTER TRANSDUCER DATA**
- **FUEL FLOW-TO-LOAD BASELINE DATA**
- **FUEL FLOW-TO-LOAD TEST DATA**
- **APP E CORRELATION TEST SUMMARY DATA**
- **UNIT DEFAULT TEST DATA**
- **TEST QUALIFICATION DATA**
- **PROTOCOL GAS DATA**
- **AIR EMISSION TESTING DATA**

These complex elements *cannot* be submitted as part of a complete QUALITY ASSURANCE AND CERTIFICATION DATA record unless an applicable TEST SUMMARY DATA record is included.

2.0 CEM Tests

2.1 7-Day Calibration Error Test

7-Day Calibration Error Test Overview

Report the details of all 7-day calibration error tests performed for initial certification, recertification, or diagnostic purposes, using TEST SUMMARY DATA and seven CALIBRATION INJECTION DATA records. For each day of the 7-day test, report the results of the zero and upscale gas injections (or flow reference signals) in one CALIBRATION INJECTION DATA record. All seven CALIBRATION INJECTION DATA records must be linked to the corresponding TEST SUMMARY DATA record for the 7-day calibration error test being reported.

7-Day Calibration Error Test Model

Figure 4: 7-Day Calibration Error Test XML Structure

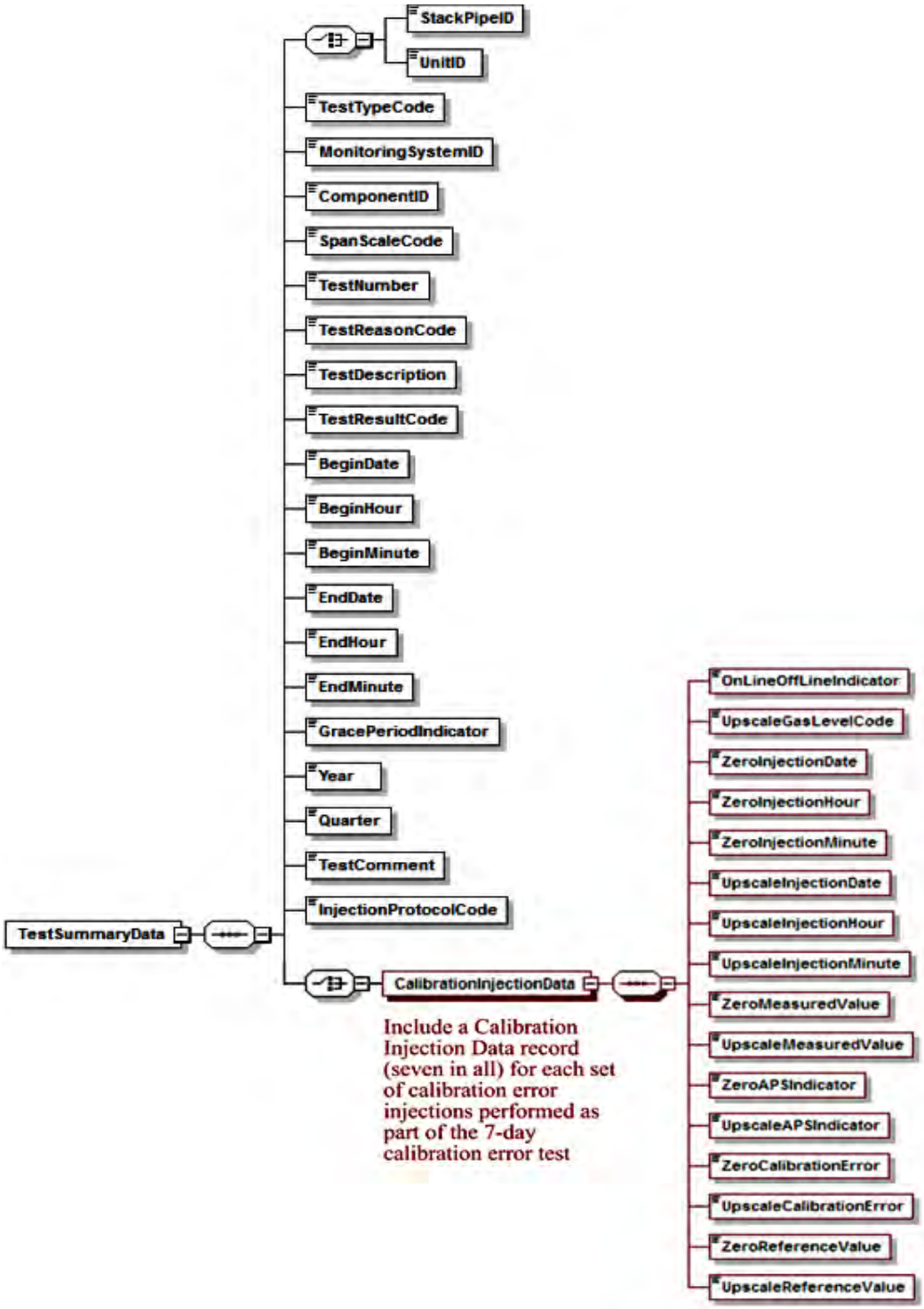

Specific Considerations

Applicability of 7-Day Calibration Error Tests

- 7-day calibration error tests are reported on a component basis, and need only be reported once per component, even if that component is shared among multiple systems.
- For moisture monitoring systems consisting of wet- and dry-basis O_2 monitors, report two 7-day calibration tests only if the wet and dry readings are obtained from two different analyzers.
- For flow monitoring systems comprised of two flow monitor components, perform and report a 7-day calibration test for each component.
- For dual range monitors, perform and report 7-day calibration tests at each range of the instrument. Report 7-day calibration error tests for each range of a dual-range analyzer as separate tests even if both ranges of the analyzer are identified by a single Component ID.

2.1.1 Test Summary Data Elements for 7-Day Calibration

Unit ID or Stack Pipe ID *(UnitID or StackPipeID)*
Report the Unit ID or Stack Pipe ID that corresponds to the location of the analyzer.

Test Type Code *(TestTypeCode)*
Report the test type code as "7DAY."

Monitoring System ID *(MonitoringSystemID)*
Leave this field blank. It does not apply to 7-day calibration error tests.

Component ID *(ComponentID)*
Report the three-character Component ID assigned to the analyzer.

Span Scale Code *(SpanScaleCode)*
Report the analyzer range of the component tested as "H" for high or "L" for low. For single range monitors, report the scale as "H" unless you are using the default high range option, in which case report the scale as "L."

Test Number *(TestNumber)*
At each monitoring location and for each test type, report a unique test number for each set of records which comprises a single test. One method of tracking unique test numbers is to use the Component ID as a prefix to the number. The test number may not be reused at this location for another 7-day calibration error test.

Test Reason Code *(TestReasonCode)*
Report the purpose of the test using the appropriate code from Table 1.

Table 1: 7-Day Calibration Test Reason Codes and Descriptions

Code	Description
DIAG	Diagnostic
INITIAL	Initial Certification
RECERT	Recertification

Test Description *(TestDescription)*
Leave this field blank. It does not apply to 7-day calibration error tests.

Test Result Code *(TestResultCode)*
Report the appropriate code from Table 2 below to indicate the result of the test.

Table 2: 7-Day Calibration Test Result Codes and Descriptions

Code	Description
ABORTED	Test was aborted due to problems with the installed monitoring system
FAILED	Test was failed
PASSED	Test was passed and the alternative performance specification was not used
PASSAPS	Test was passed using the alternative performance specification for one or more injections

Note that the monitoring system is considered out-of-control when a test is aborted due to a problem with the CEMS. (If aborted due to problems with the reference method equipment, do not report the test but keep a record of it in your test log.)

Begin Date *(BeginDate)*
Report the date of the first injection in the test.

Begin Hour *(BeginHour)*
Report the hour of the first injection in the test.

Begin Minute *(BeginMinute)*
Report the minute of the first injection in the test.

End Date *(EndDate)*
Report the date of the last injection in the test.

End Hour *(EndHour)*
Report the hour of the last injection in the test.

End Minute *(EndMinute)*
Report the minute of the last injection in the test.

Grace Period Indicator *(GracePeriodIndicator)*
Leave this field blank. It does not apply to 7-day calibration error tests.

Year *(Year)*
Leave this field blank. It does not apply to 7-day calibration error tests.

Quarter *(Quarter)*
Leave this field blank. It does not apply to 7-day calibration error tests.

Injection Protocol Code *(InjectionProtocolCode)*
This data element applies only to Hg CEMS. Report the appropriate code from Table 3 to indicate the use of either elemental or oxidized NIST-traceable Hg standards.

Table 3: Injection Protocol Codes and Descriptions

Code	Description
HGE	*NIST-Traceable Elemental Hg Standards* as defined in Section 3.1.4, Part 63, Subpart UUUUU, Appendix A
HGO	*NIST-Traceable Source of Oxidized Hg* as defined in Section 3.1.5, Part 63, Subpart UUUUU, Appendix A

Test Comment *(TestComment)*
Report a comment regarding the test if desired.

2.1.2 Calibration Injection Data

Calibration Injection Data XML Model

Figure 5: *Calibration Injection Data* XML Elements

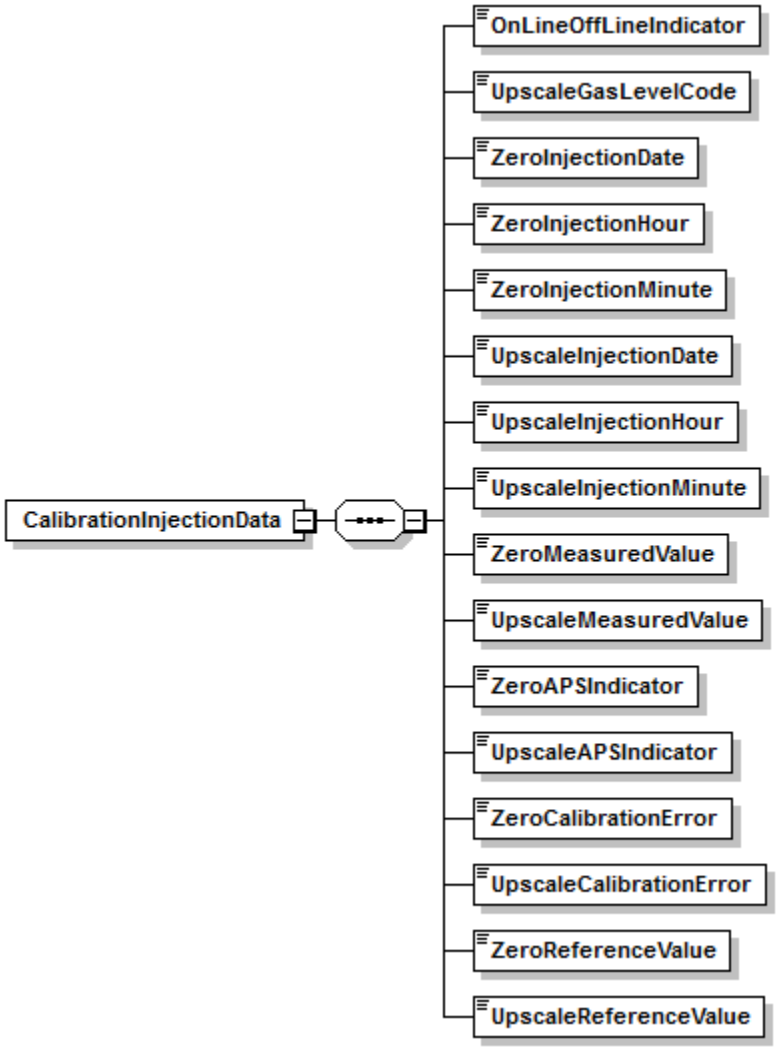

Calibration Injection Data XML Elements

Online Offline Indicator *(OnLineOffLineIndicator)*
This element indicates whether a test was performed while a unit was online or offline. Report a "1" if the test was performed while the unit was online. Report a "0" if the test was performed while the unit was offline. For a 7-day calibration test, the unit must be online when the readings are taken. For Hg monitors, all calibrations must be done while the unit is combusting fuel.

Upscale Gas Level Code *(UpscaleGasLevelCode)*
Report the code indicating the upscale level reference gas. Report "HIGH" if a high-level calibration gas (80 to 100 percent of span) or a high-level flow monitor signal (50 to 70 percent of span) is used. A mid-level calibration gas (50 to 60 percent of span) may be used in lieu of the high-level gas. Report "MID" in this field if a mid-level gas is used.

The same two gas levels or signals must be used for all days of the test.

Zero Injection Date *(ZeroInjectionDate)*
Report the date when the zero-level gas injection was completed.

Zero Injection Hour *(ZeroInjectionHour)*
Report the hour when the zero gas injection was completed.

Zero Injection Minute *(ZeroInjectionMinute)*
Report the minute when the zero gas injection was completed. Because gas injections are sequential and cannot be simultaneous, the time of zero-level and upscale injections must be different.

Upscale Injection Date *(UpscaleInjectionDate)*
Report the date when the upscale gas injection was completed.

Upscale Injection Hour *(UpscaleInjectionHour)*
Report the hour when the upscale gas injection was completed.

Upscale Injection Minute *(UpscaleInjectionMinute)*
Report the minute when the upscale gas injection was completed. Because gas injections are sequential and cannot be simultaneous, the time of zero-level and upscale injections must be different.

Zero Measured Value *(ZeroMeasuredValue)*
Report the response of the gas analyzer to the zero-level calibration gas, in ppm for SO_2 and NO_X, in µg/scm for Hg, or in pct for CO_2 and O_2. For flow monitors, report the response of the monitor to the zero-level reference signal.

Upscale Measured Value *(UpscaleMeasuredValue)*
Report the response of the gas analyzer to the upscale calibration gas, in ppm for SO_2 and NO_X, in µg/scm for Hg, or in pct for CO_2 and O_2. For flow monitors, report the response of the monitor to the upscale reference signal.

Zero APS Indicator *(ZeroAPSIndicator)*
Report whether the zero-level test result was determined using a normal specification “0” or the alternative performance specification “1” allowed under Part 75, or, for Hg, under Appendix A to 40 CFR Part 63, Subpart UUUUU.

Appendix A to Part 75 specifies that the calibration error of an O_2 or CO_2 monitor is *always* expressed in percent O_2 or CO_2, rather than as a percentage of span. This is considered to be the “normal” calibration error specification; therefore, “0” should be reported in this field. The alternate performance specification applies only to SO_2, Hg, and NO_X pollutant concentration monitors that are considered low-emitters of those pollutants and to low-span differential pressure flow monitors.

Upscale APS Indicator *(UpscaleAPSIndicator)*
Report whether the upscale test result was determined using a normal specification "0" or the alternative performance specification "1" allowed under Part 75, or, for Hg, under Appendix A to 40 CFR Part 63, Subpart UUUUU. (See discussion under Zero APS Indicator for more details.)

Zero Calibration Error *(ZeroCalibrationError)*
Report the results of the zero-level calibration error test, as required by Part 75, or, for Hg, as required by Appendix A to 40 CFR Part 63, Subpart UUUUU.

For SO_2, Hg, NO_X, and flow monitors, express the calibration error (CE) results either as a percentage of the span value or (for low emitters of $SO_2$and NO_X, for low-span differential pressure flow monitors, or for Hg monitors) as the absolute value of the difference between the reference value and the measured value (i.e., |R - A|). If the calibration error meets the standard specification, report the CE even though the test would also pass the alternative specification. Only when the result does not pass the standard specification, but meets the alternative specification, should you report |R - A|. If the test does not pass either specification, report the CE.

For low-span differential pressure-type flow monitors using the alternative specification (because the standard specification was not met): (1) report "0.0" in this field if the value of |R - A| is ≤ 0.01 inches of water. If the value of |R - A| is > 0.01 inches of water, report the result as a percentage of the span value (i.e., CE).

For CO_2 and O_2 monitors, express the result as an absolute percent CO_2 or O_2, since the results are always determined as the absolute value of the difference between the reference value and the measured value (i.e., |R - A|).

Upscale Calibration Error *(UpscaleCalibrationError)*
Report the results of the upscale calibration error test, as required by Part 75, or, for Hg, as required by Appendix A to 40 CFR Part 63, Subpart UUUUU. (See the discussion under Zero Calibration Error for more details.)

Zero Reference Value *(ZeroReferenceValue)*
Report the certified value of the zero-level reference calibration gas, in ppm for SO_2 and NO_X, in µg/scm for Hg, or in pct for CO_2 and O_2. Report the value of the reference signal, in the appropriate units, for flow monitors.

Upscale Reference Value *(UpscaleReferenceValue)*
Report the certified value of the upscale reference calibration gas, in ppm for SO_2 and NO_X, in µg/scm for Hg, or in pct for CO_2 and O_2. Report the value of the reference signal, in the appropriate units, for flow monitors.

2.2 Cycle Time Test

Cycle Time Test Overview

Except for integrated batch sampling-type Hg monitors, the Cycle Time Test is required for initial certification of a gas monitor and may be required for recertification or as a diagnostic test. The Cycle Time Test is not a required periodic quality assurance test under Appendix B to Part 75 or (for Hg monitors) under Appendix A to Part 63, Subpart UUUUU. Perform the cycle time test according to the procedures under 40 CFR Part 75, Appendix A, Section 6.4 or (for Hg monitors) according to section 4.1.1.4 of Appendix A to Part 63, Subpart UUUUU. The cycle time calculation method illustrated in the example diagrams in section 6.4 of Part 75, Appendix A applies to all types of gas monitors (including Hg monitors).

Submit one TEST SUMMARY DATA record and its associated CYCLE TIME SUMMARY DATA record for each Cycle Time Test performed on a component. Separate CYCLE TIME INJECTION DATA records are required for the upscale and downscale tests for each analyzer component.

Cycle Time Test XML Model

Figure 6: Cycle Time Test XML Structure

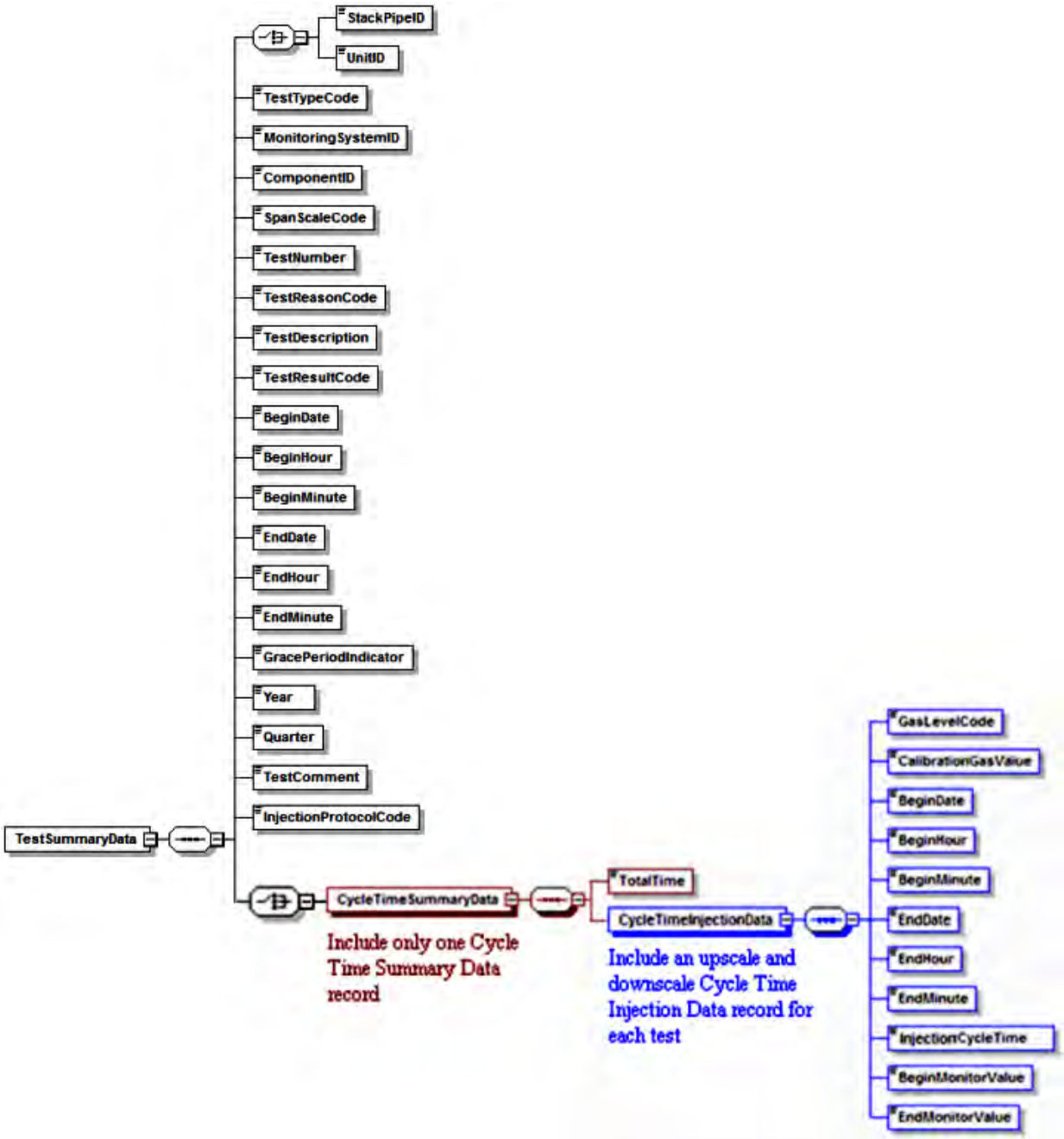

Specific Considerations

Applicability of Cycle Time Tests

- For a dual-range analyzer, report the results of cycle time testing against each range of the analyzer as two separate tests, even if both ranges of the analyzer are identified by a single Component ID.

- For a NO_X-diluent system, the entire system would be considered out of control (OOC) if either the NO_X or the diluent component fails a cycle time test.
- If you perform an "abbreviated" cycle time test as a diagnostic (refer to the Part 75 Emissions Monitoring Policy Manual), do not report the results of this test electronically. Keep the data and test results on-site, in a format suitable for audit and inspection.

2.2.1 Test Summary Data Elements for Cycle Time Test

Unit ID or Stack Pipe ID *(UnitID or StackPipeID)*
Report the Unit ID or Stack Pipe ID that corresponds to the location of the analyzer.

Test Type Code *(TestTypeCode)*
Report the test type code as "CYCLE."

Monitoring System ID *(MonitoringSystemID)*
Leave this field blank. It does not apply to cycle time tests.

Component ID *(ComponentID)*
Report the three-character Component ID assigned to the analyzer.

Span Scale Code *(SpanScaleCode)*
Report the analyzer range of the component tested as "H" for high or "L" for low. For single range monitors, report the scale as "H" unless you are using the default high range option, in which case report the scale as "L." For Hg monitors, report the scale as "H."

Test Number *(TestNumber)*
At each monitoring location and for each test type, report a unique test number for each set of records which comprises a single test. One method of tracking unique test numbers is to use the Component ID as a prefix to the number. The test number may not be reused at this location for another cycle time test.

Test Reason Code *(TestReasonCode)*
Report the purpose of the test using the appropriate code from Table 4.

Table 4: Cycle Time Test Reason Codes and Descriptions

Code	Description
INITIAL	Initial Certification
DIAG	Diagnostic
RECERT	Recertification

Test Description *(TestDescription)*
Leave this field blank. It does not apply to cycle time tests.

Test Result Code *(TestResultCode)*
Report the appropriate code from Table 5 below to indicate the result of the test.

Table 5: Cycle Time Test Result Codes and Descriptions

Code	Description
ABORTED	Test was aborted due to a problem with the monitor
FAILED	Test was failed
PASSED	Test was passed

Begin Date *(BeginDate)*
Report the begin date of the first injection in the test.

Begin Hour *(BeginHour)*
Report the begin hour of the first injection in the test.

Begin Minute *(BeginMinute)*
Report the begin minute of the first injection in the test.

End Date *(EndDate)*
Report the end date of the last injection in the test.

End Hour *(EndHour)*
Report the end hour of the last injection in the test.

End Minute *(EndMinute)*
Report the end minute of the last injection in the test.

Grace Period Indicator *(GracePeriodIndicator)*
Leave this field blank. It does not apply to cycle time tests.

Year *(Year)*
Leave this field blank. It does not apply to cycle time tests.

Quarter *(Quarter)*
Leave this field blank. It does not apply to cycle time tests.

Test Comment *(TestComment)*
Report a comment regarding the test if desired.

Injection Protocol Code *(InjectionProtocolCode)*
Report the code to indicate the use of either elemental or oxidized NIST-traceable Hg standards. See Table 3 for a list of available codes.

2.2.2 Cycle Time Summary Data

Cycle Time Summary Data XML Model

Figure 7: *Cycle Time Summary Data* XML Elements

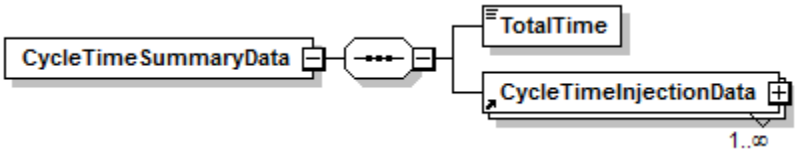

Cycle Time Summary Data XML Elements

Total Time *(TotalTime)*
Report the longer of the upscale and downscale cycle times as the total cycle time. If time-sharing is used, identify the longest component cycle time obtained for the time-shared analyzer. Add these longest component cycle times together and then add an appropriate amount of time (as determined by the CEMS manufacturer) to account for all purge cycles at the different probe locations, to obtain the total cycle time.

2.2.3 Cycle Time Injection Data

Cycle Time Injection Data XML Model

Figure 8: *Cycle Time Injection Data* XML Elements

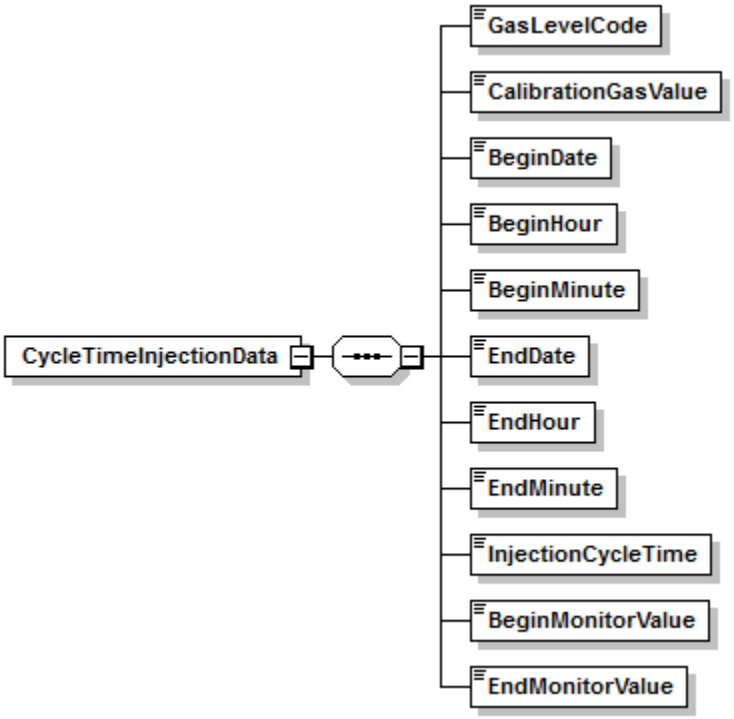

Cycle Time Injection Data XML Elements

Gas Level Code *(GasLevelCode)*
Report the gas level code as "HIGH" if this record reports the upscale response of an analyzer (i.e., from stack emissions to the high-level calibration gas). If this record reports the downscale response (i.e., from stack emissions to the zero-level calibration gas), report the calibration gas level as "ZERO."

Calibration Gas Value *(CalibrationGasValue)*
Report the certified value of the calibration gas used for the cycle time test.

Begin Date *(BeginDate)*
Report the date when the test began.

Begin Hour *(BeginHour)*
Report the hour when the test began.

Begin Minute *(BeginMinute)*
Report the minute when the test began. This is the point at which the calibration gas was injected after attaining stable stack emissions (i.e., point B in Figure 6a or 6b (as applicable) in Section 6.4 of Part 75, Appendix A).

End Date *(EndDate)*
Report the date on which the test ended.

End Hour *(EndHour)*
Report the hour when the test ended.

End Minute *(EndMinute)*
Report the minute when the test ended. This is the point at which 95 percent of the step change between the starting stable stack emissions and the ending stable calibration gas value was achieved (i.e., point C in Figure 6a or 6b (as applicable) in Section 6.4 of Part 75, Appendix A).

Injection Cycle Time *(InjectionCycleTime)*
Report the upscale or downscale cycle time (as appropriate) for this injection.

Begin Monitor Value *(BeginMonitorValue)*
Report the stable analyzer response to the stack emissions at the beginning of the cycle time test (i.e., point A in Figure 6a or 6b (as applicable) in Part 75, Appendix A).

End Monitor Value *(EndMonitorValue)*
Report the final, stable analyzer response to the calibration gas (i.e., point D in Figure 6a or 6b (as applicable) in Part 75, Appendix A).

2.3 Linearity Check Data (SO_2, NO_X, CO_2, AND O_2)

Linearity Check Data Overview

Report all linearity checks OF SO_2, NO_X, CO_2, AND O_2 monitors that are performed for initial certification, recertification, ongoing quality assurance, or diagnostic purposes, using the TEST SUMMARY DATA, LINEARITY SUMMARY DATA, and LINEARITY INJECTION DATA records. Submit one TEST SUMMARY DATA record for each linearity check. Include a separate LINEARITY SUMMARY DATA record for each gas level (low, mid, and high), to report the calculated results for each level. Each LINEARITY SUMMARY DATA record will include three LINEARITY INJECTION DATA records, (one for each calibration gas injection performed at the gas level for that LINEARITY SUMMARY DATA record). The LINEARITY INJECTION DATA record is used to report the reference and measured values for each calibration gas injection.

For a completed linearity check, there will generally be nine LINEARITY INJECTION DATA records and three corresponding LINEARITY SUMMARY DATA records. However, if a State agency requires more than the nine EPA-required gas injections for the purposes of their QA program, you may (optional) report all of the injections using the same test number, although EPA prefers that you report only the last three injections at each gas level. If more than nine injections are reported, calculate and report results in the LINEARITY SUMMARY DATA records using only the last three injections at each gas level. EPA will evaluate only the last three injections at each level, as indicated by the date and time of the injections. Additional injections will be disregarded in the Agency's recalculation of the test results.

Linearity Check Data XML Model

Figure 9: Linearity Checks XML Structure (Including: Test Summary Data, Linearity Summary Data, and Linearity Injection Data)

Specific Considerations

General Requirements for Linearity Checks

- Linearity checks must be performed with the unit in operation.
- Linearity checks are required for the initial certification of all SO_2, NO_X, CO_2, and O_2 monitors, except as noted below.
- Linearity checks are reported on a component basis. The test needs only to be reported once per component (and range), even if that component is shared among multiple

systems. For example, only one linearity check need be reported for a CO_2 monitor that is a component of both a CO_2 monitoring system and a NO_X-diluent monitoring system.

- Gas injections must be performed such that two gas injections are never performed successively at the same level (i.e., low, mid, or high) during the test.
- Linearity checks are not required for an SO_2 or NO_X analyzer scale with a span value of 30 ppm or less. A TEST EXTENSION EXEMPTION DATA record is not required to claim this exemption, which applies both to initial certification and on-going quality-assurance.
- Linearity checks for the two ranges of a dual-range analyzer are reported as separate tests, even if both ranges of the analyzer are identified in the monitoring plan by a single Component ID.
- If gas monitors are configured such that injection of calibration gases forces all of the analyzers into the calibration mode, when performing a linearity check on one monitor this may (e.g., if using tri-blend calibration gases) initiate simultaneous (unscheduled) linearity checks of the other analyzers. The results of these unscheduled linearity checks do not have to be reported as long as they meet the linearity error specifications. However, if the results of these unscheduled tests indicate that a monitoring system is out-of-control, the results must be reported and the test considered a failed linearity check.

Linearity Checks for Year-Round Reporters

- If reporting data on a year-round basis, a linearity check of each gas monitor is required for routine quality assurance in each QA operating quarter (i.e., a calendar quarter with $\geq$ 168 unit or stack operating hours).
- Limited linearity check exemptions are allowed for "non-QA operating quarters" with < 168 unit or stack operating hours. However, at least one linearity check is required every four calendar quarters, regardless of the number of unit or stack operating hours.
- If a required linearity check is not completed by the end of the quarter in which it is due, a 168 unit/stack operating hour grace period is allowed to perform the test. A TEST EXTENSION EXEMPTION DATA record is not needed to claim the exemption.
- For dual-range analyzers, you may claim limited linearity check exemptions (up to three consecutive calendar quarters) on a monitor range that is not used at all during the quarter. You must report TEST EXTENSION EXEMPTION DATA records to claim these exemptions.

Linearity Checks for Ozone Season-Only Reporters

- For Subpart H units or stacks that report NO_X mass emissions and heat input data only in the ozone season, a successful linearity check of each component of the primary or redundant backup CEMS is required prior to each ozone season. The linearities are to be completed no later than April 30 in the second-quarter and by July 30 in the third-quarter (see §75.74(c)(3)(ii)).
- The "QA operating quarter" methodology for determining the frequency of linearity checks does not apply to ozone season-only reporters. For these sources, linearity checks are required in April and July (see §75.74(c)(3)(ii)).

- The grace period provisions in Section 2.2.4 of Appendix B also do not apply to ozone season-only reporters. Instead, a 168 unit (or stack) operating hour conditional data validation period may be used to perform a linearity check that is not completed by the April 30 or July 30 deadline (see §75.74(c)(2)(ii)(F), (c)(3)(xi), and (c)(3)(xii)). You must submit a QA CERTIFICATION EVENT DATA record to document the required probationary calibration error and conditional data validation period.

Aborted, Abbreviated, or Discontinued Linearity Checks

- Report all completed and aborted linearity checks that affect data validation. However, for ozone season-only reporters, an aborted or failed pre-ozone season (April) linearity check need not be reported if a subsequent linearity check is passed prior to the start of the current ozone season.
- An aborted test must be reported and is to be treated as a failed test whenever the test is discontinued due to a monitor failure or malfunction. Do not report, or treat as a failed test, a linearity check that is discontinued because of a failure unrelated to instrument performance, such as a power outage, unit outage, or calibration gas problem. The data and results of such tests are simply documented in the test log and kept on-site. Also, do not report the results of trial gas injections that are part of the process of optimizing the performance of a monitor, when the injections meet the acceptance criteria in §75.20(b)(3)(vii)(E). Furthermore, for a monitor that is already "out-of-control" due to a failed or aborted linearity check, do not report the results of any subsequent gas injection attempts that do not meet the acceptance criteria in §75.20(b)(3)(vii)(E).
- If you perform a three-injection "abbreviated" linearity check as a diagnostic (refer to the Part 75 Emissions Monitoring Policy Manual), do not report the results of this test electronically. Keep the data and test results on-site, in a format suitable for audit and inspection.

2.3.1 Test Summary Data Elements for Linearity

Unit ID or Stack Pipe ID *(UnitID or StackPipeID)*
Report the Unit ID or Stack Pipe ID that corresponds to the location of the analyzer.

Test Type Code *(TestTypeCode)*
Report the test type code as "LINE."

Monitoring System ID *(MonitoringSystemID)*
Leave this field blank. It does not apply to linearity checks.

Component ID *(ComponentID)*
Report the three-character Component ID assigned to the analyzer.

Span Scale Code *(SpanScaleCode)*
Report the range of the component tested as "H" for high or "L" for low. For single-range analyzers, report the range as "H" unless you are using the default high-range option, in which case report the range as "L."

Test Number *(TestNumber)*
At each monitoring location and for each test type, report a unique test number for each set of records which comprises a single test. One method of tracking unique test numbers is to use the Component ID as a prefix to the number. The test number may not be reused at this location for another linearity check of the same monitoring component.

Test Reason Code *(TestReasonCode)*
Report the purpose of the test using the appropriate code from Table 6. If the test is both a periodic quality assurance test and a recertification test, report that the test is a recertification test. If the test is both a periodic quality assurance test and a diagnostic test, report that the test is a periodic quality assurance test. If this is a periodic quality assurance test performed in grace period, report that the test is a periodic quality assurance test (QA), and report "1" for the Grace Period Indicator field.

Table 6: Linearity Test Reason Codes and Descriptions

Code	Description
INITIAL	Initial Certification
DIAG	Diagnostic
QA	Periodic Quality Assurance
RECERT	Recertification

Test Description *(TestDescription)*
Leave this field blank. It does not apply to linearity checks.

Test Result Code *(TestResultCode)*
Report the appropriate code from Table 7 below to indicate the result of the test.

Table 7: Linearity Test Result Codes and Descriptions

Code	Description
ABORTED	Test was aborted due to problems with the installed monitoring system*
FAILED	Test was failed
PASSED	Test was passed and the alternate performance specification was not used
PASSAPS	Test was passed using the alternative performance specification

* If aborted due to problems with the reference method equipment, do not report the test.

Begin Date *(BeginDate)*
Report the date of the first injection in the test.

Begin Hour *(BeginHour)*
Report the hour of the first injection in the test.

Begin Minute *(BeginMinute)*
Report the minute of the first injection in the test.

End Date *(EndDate)*
Report the date of the last injection in the test.

End Hour *(EndHour)*
Report the hour of the last injection in the test.

End Minute *(EndMinute)*
Report the minute of the last injection in the test.

Grace Period Indicator *(GracePeriodIndicator)*
Report “1” if the test was performed during a grace period, or “0” if the test was performed during the normally accepted time period or after a grace period expires.

Year *(Year)*
Leave this field blank. It does not apply to linearity checks.

Quarter *(Quarter)*
Leave this field blank. It does not apply to linearity checks.

Test Comment *(TestComment)*
Report a comment regarding the test if desired.

Injection Protocol Code *(InjectionProtocolCode)*
Leave this field blank. It does not apply to linearity checks.

2.3.2 Linearity Summary Data

Linearity Summary Data XML Model

Figure 10: *Linearity Summary Data* XML Elements

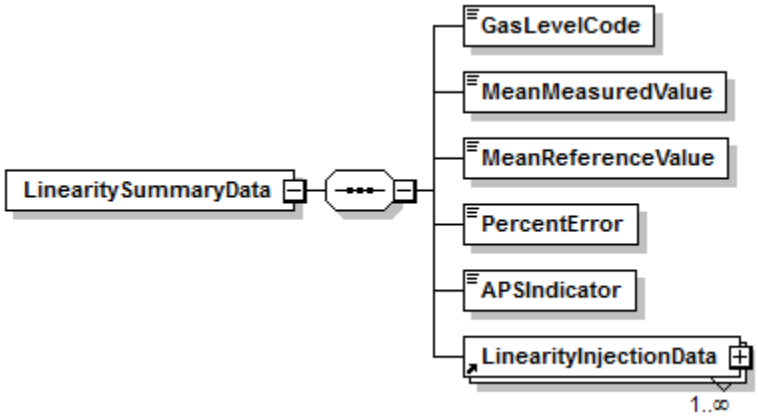

Linearity Summary Data XML Elements

Gas Level Code *(GasLevelCode)*
Report one of the calibration gas level codes with the gas injection as shown in Table 8. For high-level injections, the calibration gas concentration must be 80 to 100 percent of the span; for mid-level, 50 to 60 percent of span; and for low-level, 20 to 30 percent of span.

Table 8: Linearity Gas Level Codes and Descriptions

Code	Description
LOW	Low Level
MID	Mid Level
HIGH	High Level

Mean Measured Value *(MeanMeasuredValue)*
Calculate and report the mean (arithmetic average) of the measured values for the specified calibration gas level.

Mean Reference Value *(MeanReferenceValue)*
Calculate and report the mean (arithmetic average) of the reference values for the specified calibration gas level.

Percent Error *(PercentError)*
For the linearity checks, calculate and report the linearity error (LE) as a percentage of the reference gas value, using Equation A-4 of Part 75, Appendix A Section 7.1, or if necessary, report the absolute value of the difference between the average reference and measured values (|R - A|). The performance specifications for linearity checks are the same for initial certification

and on-going quality assurance (see Part 75, Appendix A, Section 3.2, and Appendix B, section 2.2.3(e)).

Report the LE as a percentage of the reference gas value if the test meets the standard performance specification, even if the test also meets the alternative performance specification. Only when the result does not pass the standard specification, but meets the alternative specification, is |R - A| reported. Report the LE as a percentage of the reference gas value if the test fails both specifications.

APS Indicator *(APSIndicator)*
Report “1” if you are reporting the results as |R - A|. Report a “0” if you are reporting the LE as a percentage of the reference gas value.

2.3.3 Linearity Injection Data

Linearity Injection Data XML Model

Figure 11: *Linearity Injection Data* XML Elements

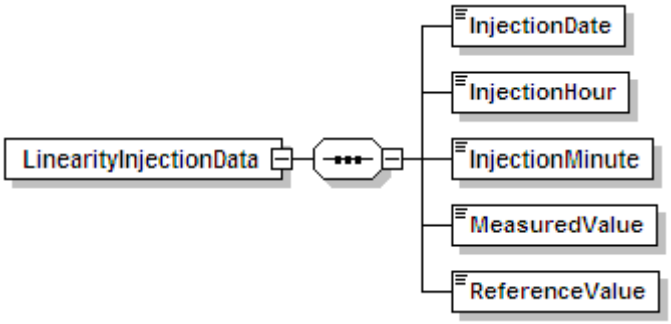

Linearity Injection Data XML Elements

Injection Date *(InjectionDate)*
Report the date on which the gas injection was performed. Because gas injections are sequential and cannot be simultaneous, the time of each gas injection in the test must be unique. Gas injections at each level must be performed such that two gas injections are never performed successively at the same level (low, mid, or high) during in the test.

Injection Hour *(InjectionHour)*
Report the hour when the gas injection was completed.

Injection Minute *(InjectionMinute)*
Report the minute when the gas injection was completed.

Measured Value *(MeasuredValue)*
Report the instrument measurement value in units of ppm for NO_X and SO_2, percent CO_2 for carbon dioxide, and percent O_2 for oxygen. The value should be rounded to the number of decimal places required for hourly measured data reported in the hourly data (i.e., one decimal place).

Reference Value *(ReferenceValue)*
Report the certified value of the reference calibration gas for each injection. The reference value must be in units of ppm for NO_X and SO_2, percent CO_2 for carbon dioxide, and percent O_2 for oxygen.

2.3.4 Linearity Protocol Gas Data

Linearity *Protocol Gas Data* Overview

Report a PROTOCOL GAS DATA record for each cylinder of gas used during the performance of a linearity check. A minimum of three records should be reported, one for each gas level (High, Mid, and Low) of the test.

Linearity *Protocol Gas Data* XML Model

Figure 12: Linearity *Protocol Gas Data* XML Elements

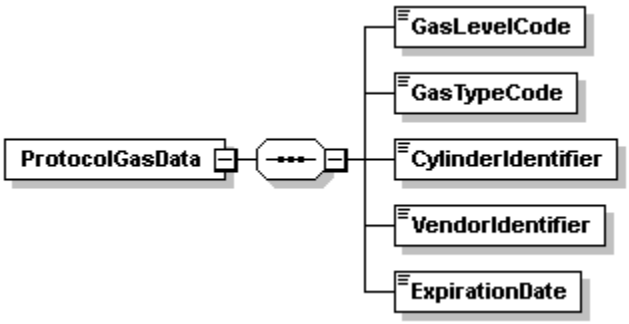

Linearity *Protocol Gas Data* XML Elements

Gas Level Code *(GasLevelCode)*
Report a calibration gas level code of HIGH, MID, or LOW to indicate the concentration of the gas in the cylinder. The definition of a high-level, mid-level, and low-level calibration gas can be found in the Part 75 performance specifications for linearity checks.

Gas Type Code *(GasTypeCode)*
Report one or more of the gas type codes in Table 9 to indicate the type(s) of gas(es) in the cylinder.

Table 9: PGVP Gas Type Codes and Descriptions

Code	Description
SO2	EPA Protocol Certified Gas Component SO_2
NO	EPA Protocol Certified Gas Component NO
NO2	EPA Protocol Certified Gas Component NO2
NOX	EPA Protocol Certified Gas Component Total Oxides of Nitrogen
N2O	EPA Protocol Certified Gas Component Nitrous Oxide
CO2	EPA Protocol Certified Gas Component CO_2
CO	EPA Protocol Certified Gas Component CO
O2	EPA Protocol Certified Gas Component O_2
PPN	EPA Protocol Certified Gas Component Propane

Code	Description
CH4	EPA Protocol Certified Gas Component Methane
HE	EPA Protocol Certified Gas Component Helium
H2S	EPA Protocol Certified Gas Component Hydrogen Sulfide
BALA	Balance Gas is Air
BALN	Balance Gas is Nitrogen
APPVD	Other EPA-approved EPA Protocol gas blend (see note below). Do not report certified components when using this code.
AIR	Zero Air Material (instrument air with no cylinder and meeting the requirements of paragraphs (2) or (3) of the ZAM definition in § 72.2). This code is reported only when it is used as a high-level O_2 gas for an oxygen analyzer. Do not report AIR when used to zero an analyzer. Do not report certified components when using this code.
SRM	Standard reference material. Do not report certified components when using this code.
NTRM	NIST-traceable reference material. Do not report certified components when using this code.
GMIS	Gas manufacturer's intermediate standard. Do not report certified components when using this code.
RGM	Research gas mixture. Do not report certified components when using this code.
PRM	SRM-equivalent compressed gas primary reference material. Do not report certified components when using this code.
ZERO	Zero gas (meeting the definition of "Zero Air Material" in §72.2) used for the low level calibration of a reference analyzer used in RATA testing. Do not report certified components when using this code.

Note: If you use a blend of EPA Protocol gases that is not present in this table, you may report a value of "APPVD," but you will need to contact EPA before submitting the data in order to get permission to use this code.

Cylinder Identifier *(CylinderIdentifier)*
Report the vendor-assigned identification or serial number found on the cylinder. Use only capitalized alphanumeric characters, hyphens, periods, or ampersands. In order to import a file with an ampersand successfully, the ampersand will need to be escaped within the XML. For example, to report the Cylinder ID <AB01234567&>, the XML would read <AB01234567&>.

For purified air material, leave this field blank.

Vendor Identifier *(VendorIdentifier)*
For an EPA Protocol gas, report the EPA-assigned PGVP Vendor ID of the production site that supplied the cylinder. PGVP Vendor IDs are year specific, therefore report the assigned PGVP Vendor ID that is applicable on the date the cylinder is certified. Leave this field blank if the Gas Type Code is ZERO, AIR, SRM, NTRM, GMIS, RGM, or PRM.

Expiration Date *(ExpirationDate)*
For an EPA Protocol gas, SRM, NTRM, GMIS, RGM or PRM, report the cylinder's expiration date. Leave this field blank if the Gas Type Code is AIR or ZERO.

Specific Considerations

- You must report a PROTOCOL GAS DATA record when using standard reference material, NIST-traceable reference material, gas manufacturer's intermediate standard, research gas mixture, or SRM-equivalent compressed gas primary reference material in place of an EPA Protocol gas. Report all data elements in this record except the PGVP Vendor ID and the Expiration Date of the cylinder.
- You must report a PROTOCOL GAS DATA record when using purified air material as the high-level O_2 gas. Do not report the Cylinder ID, PGVP Vendor ID, and the Expiration Date of the cylinder.

2.4 Hg Linearity and 3-Level System Integrity Check Data

Hg Linearity/System Integrity Check Overview

Report all Hg linearity checks and 3-level system integrity checks performed for initial certification, recertification, ongoing quality assurance, or diagnostic purposes using the TEST SUMMARY DATA, HG SUMMARY DATA, and HG INJECTION DATA records. Submit one TEST SUMMARY DATA record for each test. Include a separate HG SUMMARY DATA record for each tested gas level (low, mid, high) in order to report the calculated results for that gas level. Each HG SUMMARY DATA record will include multiple HG INJECTION DATA records (one for each calibration injection performed at the gas level for that HG SUMMARY DATA record). The HG INJECTION DATA record is used to report the reference and measured values for each calibration gas injection.

For completed tests, there will generally be three HG SUMMARY DATA records and nine corresponding HG INJECTION DATA records.

Hg Linearity/System Integrity Check XML Model

Figure 13: Hg Linearity/System Integrity Check XML Structure

Specific Considerations

General Requirements

- For initial certification, a linearity check must be performed. For Hg monitors, a 3-level system integrity check is also required for initial certification. (See sections 4.1.1.2 and 4.1.1.3 of Appendix A to 40 CFR Part 63, Subpart UUUUU)
- For ongoing quality assurance, conduct either quarterly linearity checks as specified in section 5.1.2.2 of Appendix A to 40 CFR Part 63, Subpart UUUUU <u>or</u> 3-level system integrity checks.
- Linearity and 3-level system integrity checks are reported on a component basis.

- Linearity and 3-level system integrity checks are required to be performed with the unit in operation.

Aborted or Discontinued Linearity or 3-Level System Integrity Checks

- Report all completed and aborted linearity or 3-level system integrity checks that affect data validation.
- An aborted test must be reported and is to be treated as a failed test whenever the test is discontinued due to a monitor failure or malfunction. Do not report or treat as a failed test a linearity or 3-level system integrity check which is discontinued because of a failure which is unrelated to instrument performance, such as a power outage, unit outage, or calibration gas problem. Such tests that are aborted must simply be documented in the test log and kept on-site. For a monitor that is already "out-of-control" due to a failed or aborted linearity check or 3-level system integrity check, it is not necessary to report the results of subsequent injection attempts that do not meet the acceptance criteria in Appendix A of Subpart UUUUU.

Reporting Deadlines

- A linearity check <u>or</u> 3-level system integrity check of each Hg monitor is required in each QA operating quarter (i.e., a calendar quarter with $\geq$ 168 unit or stack operating hours) for routine quality assurance.
- Limited linearity check (or 3-level system integrity check) exemptions are allowed for "non-QA operating quarters" with < 168 unit or stack operating hours. However, at least one linearity check (or 3-level system integrity check) is required every four calendar quarters, regardless of the number of unit or stack operating hours.
- If a required linearity or 3-level system integrity check is not completed by the end of the quarter in which it is due, a 168 unit/stack operating hour grace period is allowed to perform the test.

(See section 5.1.2.2 and Table A-2 in Appendix A to 40 CFR Part 63, Subpart UUUUU)

2.4.1 Test Summary Data Elements for Hg Linearity and System Integrity

Unit ID or Stack Pipe ID *(UnitID or StackPipeID)*
Report the Unit ID or Stack Pipe ID that corresponds to the location of the analyzer.

Test Type Code *(TestTypeCode)*
For an Hg linearity check, report the test type code as "HGLINE." For a 3-level system integrity check, report the test type code as "HGSI3."

Monitoring System ID *(MonitoringSystemID)*
Leave this field blank. It does not apply to linearity or 3-level system integrity checks.

Component ID *(ComponentID)*
Report the three-character Component ID assigned to the Hg analyzer.

Span Scale Code *(SpanScaleCode)*
Report the range of the component tested as "H."

Test Number *(TestNumber)*
At each monitoring location and for each test type, report a unique test number for each set of records which comprise a single test. One method of tracking unique test numbers is to use the Component ID as a prefix to the number. The test number may not be reused at this location for another test of the same type.

Test Reason Code *(TestReasonCode)*
Report the purpose of the test using the appropriate code from Table 10. If the test is both a periodic quality assurance test and a recertification test, report that the test is recertification test. If the test is both a periodic quality assurance test and a diagnostic test, report that the test is a periodic quality assurance test.

Table 10: Hg Linearity or 3-Level System Integrity Check Reason Codes and Descriptions

Code	Description
INITIAL	Initial Certification
DIAG	Diagnostic
QA	Periodic Quality Assurance
RECERT	Recertification

Test Description *(TestDescription)*
Leave this field blank. It does not apply to linearity or 3-level system integrity checks.

Test Result Code *(TestResultCode)*
Report the appropriate code from Table 11 below to indicate the result of the test.

Table 11: Hg Linearity or 3-Level System Integrity Check Result Codes and Descriptions

Code	Description
ABORTED	Test was aborted due to problems with the installed monitoring system
FAILED	Test was failed
PASSED	Test was passed and the alternate performance specific was not used
PASSAPS	Test was passed using the alternative performance specification

If the test is aborted due to problems unrelated to the monitor's performance, do not report the test.

Begin Date *(BeginDate)*
Report the date of the first injection in the test.

Begin Hour *(BeginHour)*
Report the hour, on the begin date, of the first injection in the test.

Begin Minute *(BeginMinute)*
Report the minute, during the begin hour, of the first injection in the test.

End Date *(EndDate)*
Report the date of the last injection in the test.

End Hour *(EndHour)*
Report the hour, on the end date, of the last injection in the test.

End Minute *(EndMinute)*
Report the minute, during the end hour, of the last injection in the test.

Grace Period Indicator *(GracePeriodIndicator)*
Report "1" if the test was performed during a grace period, or "0" if the test was performed either on-schedule or after the expiration of an allotted grace period.

Year *(Year)*
Leave this field blank. It does not apply to linearity or 3-level system integrity checks.

Quarter *(Quarter)*
Leave this field blank. It does not apply to linearity or 3-level system integrity checks.

Test Comment *(TestComment)*
Report a comment regarding the test, if desired.

Injection Protocol Code *(InjectionProtocolCode)*
Leave this field blank. It does not apply to linearity or 3-level system integrity checks.

2.4.2 Hg Summary Data

Hg Summary Data XML Model

Figure 14: *Hg Summary Data* XML Elements

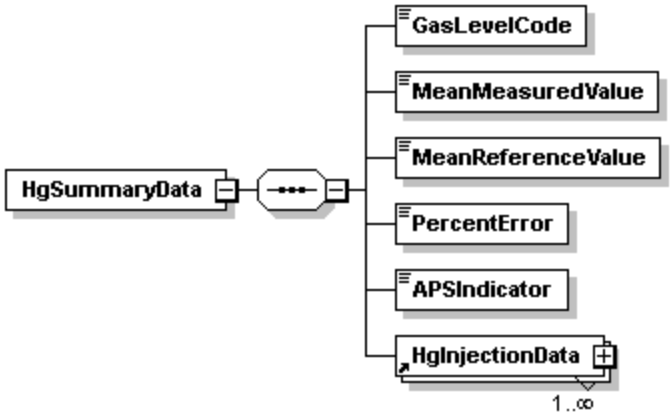

Hg Summary Data XML Elements

Gas Level Code (*GasLevelCode)*
Report one of the calibration gas level codes with the gas injection as shown in Table 12. For high-level injections, the calibration gas concentration must be 80 to 100% of the span value; for mid-level, 50 to 60% of the span value; and for low-level, 20 to 30% of the span value.

Table 12: Linearity and 3-Level System Integrity Check Gas Level Codes and Descriptions

Code	Description
LOW	Low Level
MID	Mid Level
HIGH	High Level

Mean Measured Value (*MeanMeasuredValue)*
Calculate and report the mean (arithmetic average) of the measured values for the specified calibration gas level.

Mean Reference Value (*MeanReferenceValue)*
Calculate and report the mean (arithmetic average) of the reference values for the specified calibration gas level.

Percent Error (*PercentError)*
Calculate and report the error as a percentage of the reference gas value or, if necessary, as the absolute value of the difference between the average reference and measured values (|R – A|). For each type of test, the performance specifications are the same for both initial certification and on-going quality-assurance (see Tables A-1 and A-2 in Appendix A to 40 CFR Part 63, Subpart UUUUU).

Report the linearity error (LE) or system integrity error (SIE) as a percentage of the reference value if the test meets the standard performance specification, even if the test also meets the alternative performance specification. Only when the result does not pass the standard specification, but does meet the alternative specification, is |R – A| reported. Report the error as a percentage of the reference gas value if the test fails both specifications.

APS Indicator (*APSIndicator)*
Report "1" if you are reporting the results as the absolute value of the difference between the average reference and measured values. Report "0" if you are reporting the LE or SIE as a percentage of the reference gas value.

2.4.3 Hg Injection Data

Hg Injection Data XML Model

Figure 15: *Hg Injection Data* XML Elements

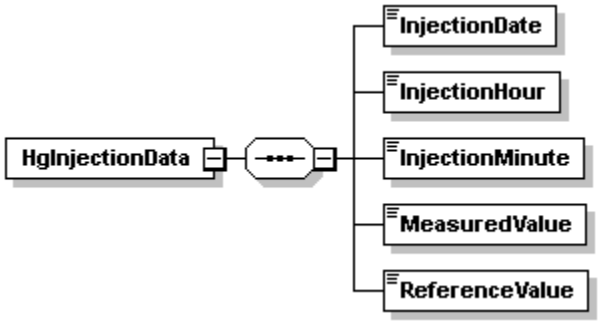

Hg Injection Data XML Elements

Injection Date *(InjectionDate)*
Report the date of the gas injection. Because gas injections are sequential and cannot be simultaneous, the time of each gas injection must be unique for each analyzer. Gas injections at each level (L, M, H) must be performed such that two gas injections are never performed successively at the same level.

Injection Hour *(InjectionHour)*
Report the hour of the gas injection.

Injection Minute *(InjectionMinute)*
Report the minute of the gas injection.

Measured Value *(MeasuredValue)*
Report the measured value in units of µg/scm, rounded to one decimal place.

Reference Value *(ReferenceValue)*
Report the certified value of the reference calibration gas for each injection in units of µg/scm, rounded to one decimal place.

2.5 Relative Accuracy Test Audit (RATA)

RATA Overview

Report all RATAs performed for initial certification, recertification, ongoing quality assurance, or diagnostic purposes using TEST SUMMARY DATA, RATA DATA, RATA SUMMARY DATA, and RATA RUN DATA records. Use the RATA RUN DATA record to report the measured data for each test run. The RATA SUMMARY DATA record is used to report the calculated results and statistical information for the RATA at the tested operating level. You must include a RATA SUMMARY DATA record for each operating level tested to satisfy the RATA testing requirement. Use the RATA DATA record to report the number of operating levels that make up the RATA and the overall results of the test (i.e., relative accuracy, bias adjustment factor, and RATA test frequency). There should be a single RATA DATA record for each RATA.

Only one RATA SUMMARY DATA record (along with its associated RATA RUN DATA records) is reported for a RATA of a gas or moisture monitoring system. Up to three RATA SUMMARY DATA records (along with their associated RATA RUN DATA records) are reported for a RATA of a flow monitoring system, depending upon whether the test was performed at one, two, or three operating levels. There should be a minimum of nine RATA RUN DATA records reported for each operating level, unless the RATA was aborted.

In addition to the records listed above, the following records must be reported in certain circumstances:

- Report FLOW RATA RUN DATA records and RATA TRAVERSE DATA records for RATAs of flow monitoring systems in which:
    - Method 2F or 2G is used; or
    - Method 2 is used, and a calculated wall effects adjustment factor is determined by direct measurement using Method 2H.

      For Method 2F and 2G RATAs, report a FLOW RATA RUN DATA record for each run used to calculate relative accuracy (i.e., Run Status Code is equal to "RUNUSED" in the RATA RUN DATA record).

      For Method 2 RATAs using Method 2H to derive a measured wall effects adjustment factor, report a FLOW RATA RUN DATA record for the run (or runs) used to calculate the wall effects adjustment factor.

      With each FLOW RATA RUN DATA record, report a RATA TRAVERSE DATA record for each Method 1 traverse point in the run. There should be a minimum of twelve RATA TRAVERSE DATA records reported for each run. However, a minimum of sixteen records is required for circular stacks using a calculated wall effects adjustment factor.
- Report a TEST QUALIFICATION DATA record to claim an exception from the usual testing requirements. Additional details are provided in the TEST QUALIFICATION DATA record. There are three types of claims for which this record is appropriate:
    1. **Single-load Flow RATA claim.** For locations that have an installed stack flow monitor and operate primarily at a single operating level (in accordance with Part

75, Appendix B Section 2.3.1.3(c)(3)), include this claim with each flow RATA to indicate the supporting load operation percentages.

2. **Exception from Normal Load requirement for pollutant system.** For unusual situations in which a single-level RATA could not be performed at the normal operating level, include this claim if the RATA was performed at a different operating level. You must receive specific EPA approval to qualify for this exception.

3. **Exception from Normal Load requirement for flow system.** For unusual situations in which a multi-level flow RATA could not be performed when the unit was operating at normal load ranges, include this claim if the load ranges of the operating levels tested deviated from the values reported in the MONITORING LOAD DATA record for the unit or stack. You must receive specific EPA approval to qualify for this exception.

RATA XML Models

Figure 16: RATA XML Models

Figure 16a: RATA Test XML Structure

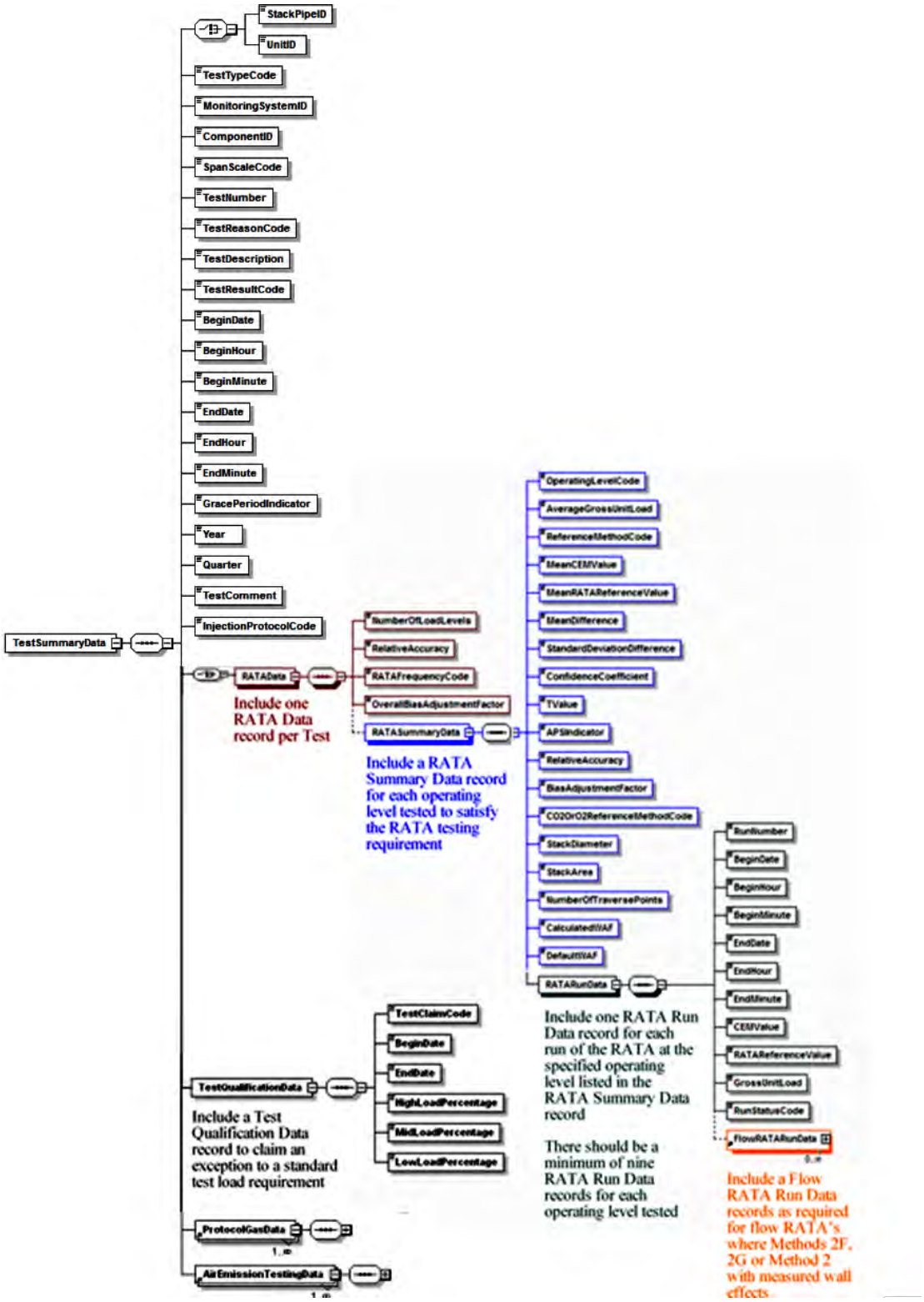

Figure 16b: Additional RATA XML Elements for Flow RATAs (Methods 2F and 2G, and Method 2 using Method 2H Wall Effects Measurements)

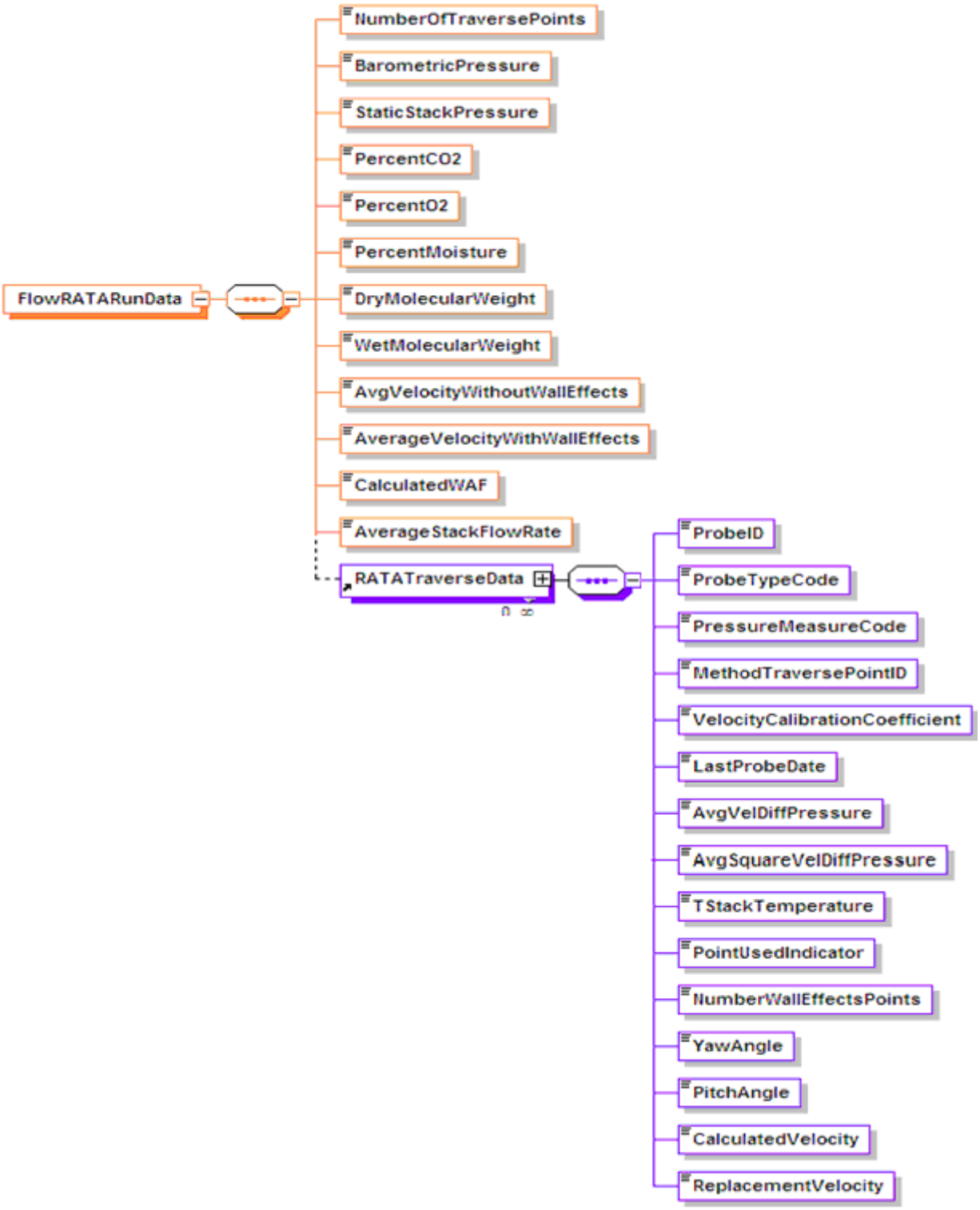

Specific Considerations

General Requirements

- RATAs are performed and reported only on a system basis. For example, the RATA for a NO_X-diluent monitoring system must be performed on a lb/mmBtu basis, and not on an individual component basis.
- Gas monitor RATAs are always single-load tests, performed at the designated normal load. If two normal loads are defined in the monitoring plan, the test may be done at either load level.
- Flow RATAs are generally required to be performed at three operating levels (low, mid, and high) for initial certification and recertification. For ongoing QA tests, the RATAs are generally done at the two most frequently-used operating levels, although a three-load test is required at least once every five years (20 calendar quarters), and whenever the flow monitor polynomial constants or K-factors are changed. Note the following exceptions:
    - For flow monitors installed on peaking units and bypass stacks, only single-load flow RATAs are required.
    - Some units have approved petitions to perform tests at fewer than the standard number of load levels. If the exemption from the standard requirement is ongoing, this information should be reported in the MONITOR QUALIFICATION DATA record in the monitoring plan. If the exemption is test-specific, such as a single-load claim based on operating for ≥ 85.0 percent of the time at a single load since the previous annual flow RATA, this information should be reported in a TEST QUALIFICATION DATA record.
- For certain Hg reference methods (i.e., EPA Method 29 and the Ontario Hydro Method), paired sampling trains are required when performing the RATA (see section 4.1.1.5 of Appendix A to 40 CFR Part 63, Subpart UUUUU). To validate a RATA run, the relative deviation (RD) of the Hg concentrations obtained with the paired trains must not exceed 10 percent, when the average Hg concentration is greater than 1.0 μg /m^3. If the average Hg concentration is less than or equal to 1.0 μg /m^3, the RD must not exceed 20 percent. The RD results are also acceptable if the absolute difference between the Hg concentrations measured by the paired trains does not exceed 0.2 μg/m^3.

Aborted or Discontinued RATAs

- Report the results of all completed and aborted RATAs which affect data validation. However, for ozone season-only reporters, an aborted or failed pre-ozone season RATA need not be reported if a subsequent RATA is passed prior to the start of the current ozone season.
- An aborted RATA is treated as a failed test if the RATA is discontinued due to a monitor system failure, and the results must be reported. It is not necessary to report, or to treat as a failed test, a RATA which is discontinued because of a failure which is unrelated to instrument performance, such as a power outage, unit outage, unit stability problems, or reference method failure.

- Also, do not report the results of trial RATA runs that are part of the process of optimizing the performance of a Part 75 monitor, when the injections meet the acceptance criteria in §75.20(b)(3)(vii)(E). For trial runs that do not affect data validation, document the results as part of the official test log and maintain records on-site (or at an alternative location known to the regulatory agency, if on-site storage is not feasible).

RATA Deadlines

- For units or stacks reporting data on a year-round basis for routine quality assurance, a RATA of each primary or redundant backup monitoring system (except for Hg, HCl and HF CEMS and Hg sorbent trap monitoring systems) is required either semiannually (i.e., once every two QA operating quarters) or annually (i.e., once every four QA operating quarters), depending on the relative accuracy (RA) percentage obtained in the previous RATA. For Hg, HCl and HF CEMS or sorbent trap monitoring systems, the required RATA frequency is annual (i.e., once every four QA operating quarters), irrespective of the RA percentage attained in the previous test. However, in all cases, a RATA is required once every eight calendar quarters, regardless of how many QA operating quarters have elapsed since the last test.
- For a non-redundant backup monitoring system, a RATA is required only once every eight quarters, unless it is used at a particular unit or stack location for more than 720 hours in a calendar year (see §75.20(d)). To claim this exemption, report the appropriate TEST EXTENSION EXEMPTION DATA record.
- Part 75 also allows extensions of SO_2 RATA deadlines based on the type of fuel combusted during the quarter and provides conditional RATA exemptions in certain instances. Use the TEST EXTENSION EXEMPTION DATA records to report these claims. (See the TEST EXTENSION EXEMPTION DATA instructions for details.) If a unit with an SO_2 monitor combusts <u>only</u> very low sulfur fuel (as defined in 40 CFR 72.2) and no other type(s) of fuel(s), the owner or operator is exempted from performing SO_2 RATAs (see §75.21(a)(6)); no test exemption claim record is necessary in this case.
- For year-round reporters, if a required RATA is not completed by the end of the quarter in which it is due, a 720 unit/stack operating hour grace period is allowed to perform the test. A TEST EXTENSION EXEMPTION DATA record is not needed to claim the exemption.
- For units or stacks reporting data only in the ozone season, a successful RATA of each primary and redundant backup CEMS is required prior to each ozone season. The RATA is to be completed no later than April 30 each year in either the first or second calendar quarter, but no later than April 30 (see §75.74(c)(2)(ii)). Note that the QA operating quarter method of determining RATA deadlines and data validation status does not apply to these units or stacks.
- The RATA grace period provisions in Section 2.3.3 of Appendix B also do not apply to units or stacks reporting data only in the ozone season. However, a 720 unit (or stack) operating hour conditional data validation period may be used to complete a RATA after the April 30 deadline (see §75.74(c)(2)(ii)(F), (c)(3)(xi) and (c)(3)(xii)). You must submit a QA CERTIFICATION EVENT DATA record to document the required probationary calibration error and conditional data validation period.

- The single-load flow RATA provision based on operation at a single load level (L, M, or H) for ≥ 85% of the time since the previous flow RATA does not apply to ozone season-only reporters.

2.5.1 Test Summary Data Elements for RATA

Unit ID or Stack Pipe ID *(UnitID or StackPipeID)*
Report the Unit ID or Stack Pipe ID that corresponds to the location of the monitoring system.

Test Type Code *(TestTypeCode)*
Report the test type code as "RATA."

Monitoring System ID *(MonitoringSystemID)*
Report the three-character Monitoring System ID assigned to the monitoring system.

Component ID *(ComponentID)*
Leave this field blank. It does not apply to RATAs.

Span Scale Code *(SpanScaleCode)*
Leave this field blank. It does not apply to RATAs.

Test Number *(TestNumber)*
Assign and report a test number to each set of relative accuracy runs which comprises a relative accuracy test. For a multi-level flow RATA, all the low, mid, and high level runs (as applicable) of the test in the RATA RUN DATA records and their corresponding RATA SUMMARY DATA records are part of the same test.

Test Reason Code *(TestReasonCode)*
Report the purpose of the test using the appropriate code from Table 13. If the test is both a periodic quality assurance test and a recertification test, report that the test is a recertification test. If the test is both a periodic quality assurance test and a diagnostic test, report that the test is a periodic quality assurance test. If this is a periodic quality assurance test performed in grace period, report that the test is a periodic quality assurance test (QA), and report "1" for the Grace Period Indicator field.

Table 13: RATA Test Reason Codes and Descriptions

Code	Description
INITIAL	Initial Certification
DIAG	Diagnostic
QA	Periodic Quality Assurance
RECERT	Recertification

Test Description *(TestDescription)*
Leave this field blank. It does not apply to RATAs.

Test Result Code *(TestResultCode)*
Report the appropriate code from Table 14 below to indicate the result of the test.

Table 14: RATA Test Result Codes and Descriptions

Code	Description
ABORTED	Test was aborted due to problems with the installed monitoring system.*
FAILED	Test was failed.
PASSED	Test was passed and the alternate performance specification was not used.
PASSAPS	Test was passed using the alternative performance specification.

* If aborted due to problems with the process or the reference method equipment, do not report the test.

Begin Date *(BeginDate)*
Report the begin date of the first run in the test.

Begin Hour *(BeginHour)*
Report the begin hour of the first run in the test.

Begin Minute *(BeginMinute)*
Report the begin minute of the first run in the test.

End Date *(EndDate)*
Report the end date of the last run in the test.

End Hour *(EndHour)*
Report the end hour of the last run in the test.

End Minute *(EndMinute)*
Report the end minute of the last run in the test.

Grace Period Indicator *(GracePeriodIndicator)*
Report "1" if the test was performed during a grace period, and "0" if the test was performed either on-schedule or after the expiration of an allotted grace period.

Year *(Year)*
Leave this field blank. It does not apply to RATAs.

Quarter *(Quarter)*
Leave this field blank. It does not apply to RATAs.

Test Comment *(TestComment)*
Report any comments regarding the test. Additionally, for tests conducted after January 1, 2009, EPA encourages use of this field to report the name of the stack testing company, the lead tester, and whether testing was conducted in accordance with ASTM D7036.

Injection Protocol Code *(InjectionProtocolCode)*
Leave this field blank. It does not apply to RATAs.

2.5.2 RATA Data

RATA Data XML Model

Figure 17: *RATA Data* XML Elements

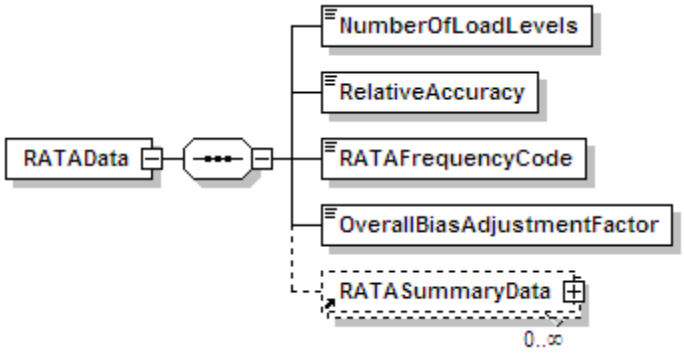

RATA Data XML Elements

Number of Load Levels *(NumberOfLoadLevels)*
Report the number of operating level tests which are required for a successful RATA. For RATAs of gas and moisture systems, report "1." For flow RATAs, report "1," "2," or "3," as appropriate.

Relative Accuracy *(RelativeAccuracy)*
Report the relative accuracy percentage, calculated according to section 7.3 of Part 75, Appendix A or (for Hg monitoring systems), according to section 4.1.1.5.2 of Appendix A to 40 CFR Part 63, Subpart UUUUU. For HCl and HF monitoring systems calculate the relative accuracy percentage, on a ppm basis, according to section 12 of Performance Specification 2 (PS 2) in appendix B to part 60 (see Equations 2-3 through 2-6 of PS 2). For multi-level flow RATAs, report the highest relative accuracy percentage at all tested operating levels. Leave this field blank for a RATA that is aborted prior to completion, due to a problem with the monitoring system.

RATA Frequency Code *(RATAFrequencyCode)*
For year-round reporters, report the frequency code from Table 15 below that identifies when a RATA performed for initial certification, recertification, or routine QA expires and the next test is due. For primary and redundant backup monitoring systems (except for Hg, HCl and HF CEMS and Hg sorbent trap monitoring systems), the test frequency is based on the relative accuracy percentage obtained, or, if necessary, on the alternative performance specification. If the test qualifies for a reduced (i.e., annual) RATA frequency as provided in Part 75, Appendix B, Section 2.3.1.2, report 4QTRS. If the RATA passes but does not qualify for annual frequency, then the standard (semiannual) test frequency applies; in that case, report 2QTRS. If a single load flow RATA is conducted as the required semi-annual test, report ALTSL. For non-redundant backup systems, if the RATA passes, report 8QTRS. For ozone season-only reports, report OS. For Hg, HCl, and HF CEMS and Hg sorbent trap monitoring systems, report 4QTRS since the RATA frequency is always annual.

Table 15: RATA Frequency Codes and Descriptions

Code	Description
2QTRS	Two QA Operating Quarters
4QTRS	Four QA Operating Quarters
8QTRS	Eight Calendar Quarters (applies to non-redundant backup systems only)
ALTSL	Alternating Single Load RATA for Flow
OS	Ozone Season-Only

Leave this field blank if the RATA failed.

Overall Bias Adjustment Factor *(OverallBiasAdjustmentFactor)*
Report the overall bias adjustment factor (BAF) for the system determined from the RATA data. For the RATA of a moisture, Hg, HCl, HF, CO_2, or O_2 monitoring system, the BAF will always be 1.000.

For a single-level RATA, report the BAF calculated at the tested operating level. For a multi-level flow RATA, report 1.000 only if the bias test is passed (i.e., the BAF was calculated as 1.000) at all normal operating levels. (A unit or stack may have one or two operating levels designated as normal in the MONITORING LOAD DATA record.) If the bias test failed at any normal operating level, report the higher of the BAFs that were calculated at the two most frequently used operating levels, as designated in the MONITORING LOAD DATA record. (See Section 6.5.2.1(d) and Section 7.6.5(c) of Appendix A to Part 75.)

Leave this field blank if the RATA failed.

2.5.3 RATA Summary Data

RATA Summary Data XML Model

Figure 18: *RATA Summary Data* XML Elements

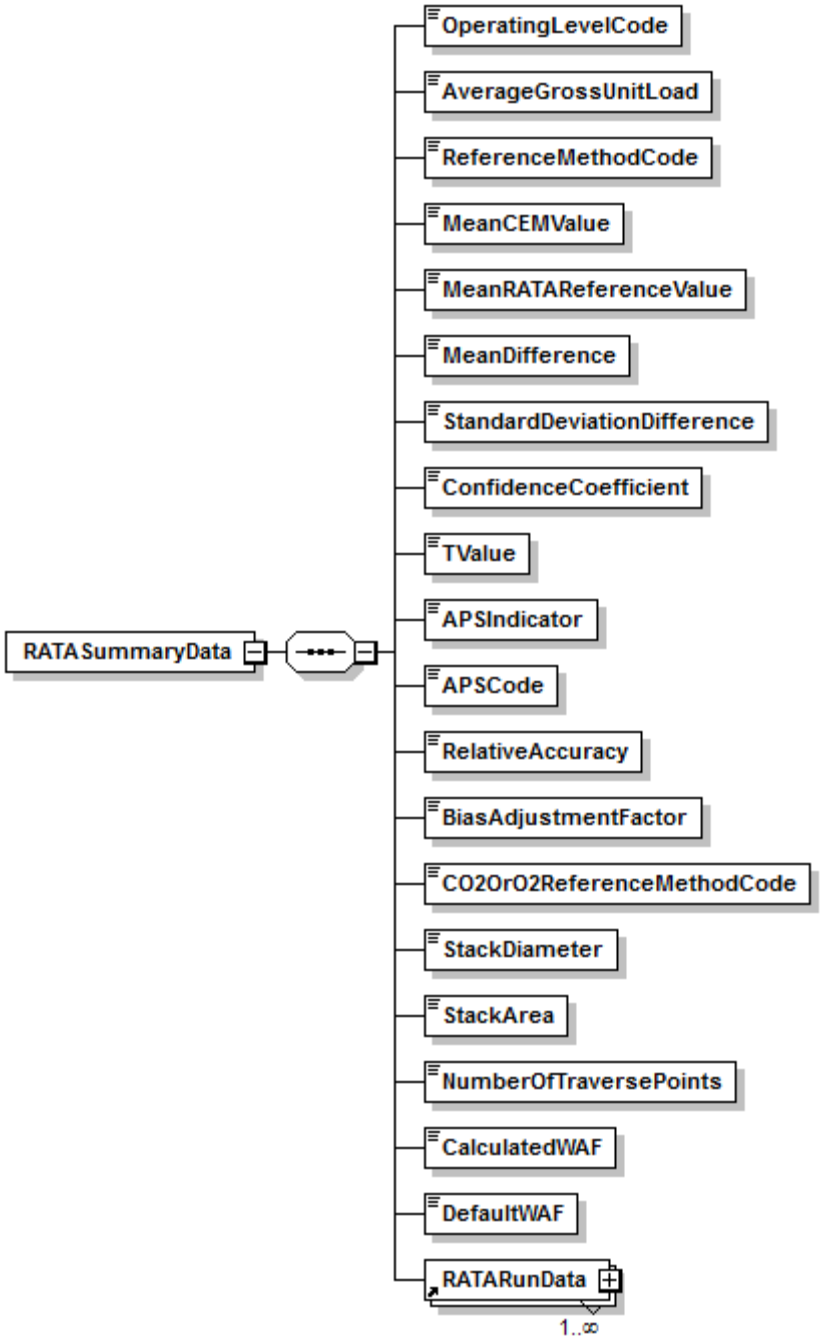

RATA Summary Data XML Elements

Operating Level Code *(OperatingLevelCode)*
Report the appropriate operating level code for the set of runs summarized by this RATA summary record, as shown in Table 16.

Table 16: RATA Operating Level Codes and Descriptions

Code	Description
L	Low
M	Mid
H	High
N	Normal (for peaking units only)

Average Gross Unit Load (or **Average Velocity at Operating Level**) *(AverageGrossUnitLoad)*
Report the average gross unit load in either megawatts or steam load (consistent with the MONITORING LOAD DATA record in your monitoring plan) for all runs used in the relative accuracy calculation for this load level for load-based units. For units that do not produce electrical or steam load report the average velocity in ft/sec at the tested operating level (see RATA RUN DATA record and GROSS UNIT LOAD DATA record instructions).

Reference Method Code *(ReferenceMethodCode)*
Report the primary reference method(s) used to determine relative accuracy, using the codes below.

For gas monitoring systems use the following codes shown in Table 17.

Table 17: Reference Method Codes for Gas System RATAs

System Type	Code	Commonly Used RATA Method(s)
CO2, O2	3	CO_2 or O_2 Monitoring System RATA Using RM 3
	3A	CO_2 or O_2 Monitoring System RATA Using RM 3A
	3B	CO_2 or O_2 Monitoring System RATA Using RM 3B
H2O, H2OM	4	Moisture Monitoring System RATA Using RM 4
HG, ST	OH	ASTM D6784-02 (Ontario Hydro Method)
	29	EPA Method 29 in Appendix A-8 to 40 CFR Part 60
	30A	EPA Method 30A-- Instrumental (Appendix A-8 to Part 60)
	30B	EPA Method 30B-- Sorbent Trap (Appendix A-8 to Part 60)
HCL, HF	26	EPA Method 26 in Appendix A-8 to 40 CFR Part 60
	26A	EPA Method 26A in Appendix A-8 to 40 CFR Part 60
	320	EPA Method 320 in Appendix A to 40 CFR Part 63
	D6348	ASTM D6348-03 (Reapproved 2010) "Standard Test Method for Determination of Gaseous Compounds by Extractive Direct Interface Fourier Transform Infrared (FTIR) Spectroscopy"

System Type	Code	Commonly Used RATA Method(s)
NOX, NOXP	20,3	NO_X-diluent Monitoring System RATA Using RM 20* and RM 3
	20,3A	NO_X-diluent Monitoring System RATA Using RM 20* and RM 3A
	20,3B	NO_X-diluent Monitoring System RATA Using RM 20* and RM 3B
	7,3	NO_X-diluent Monitoring System RATA Using RM 7 and RM 3
	7,3A	NO_X-diluent Monitoring System RATA Using RM 7 and RM 3A
	7,3B	NO_X-diluent Monitoring System RATA Using RM 7 and RM 3B
	7A,3	NO_X-diluent Monitoring System RATA Using RM 7A and RM 3
	7A,3A	NO_X-diluent Monitoring System RATA Using RM 7A and RM 3A
	7A,3B	NO_X-diluent Monitoring System RATA Using RM 7A and RM 3B
	7C,3	NO_X-diluent Monitoring System RATA Using RM 7C and RM 3
	7C,3A	NO_X-diluent Monitoring System RATA Using RM 7C and RM 3A
	7C,3B	NO_X-diluent Monitoring System RATA Using RM 7C and RM 3B
	7D,3A	NO_X-diluent Monitoring System RATA Using RM 7D and RM 3A
	7D,3B	NO_X-diluent Monitoring System RATA Using RM 7D and RM 3B
	7E,3	NO_X-diluent Monitoring System RATA Using RM 7E and RM 3
	7E,3A	NO_X-diluent Monitoring System RATA Using RM 7E and RM 3A
	7E,3B	NO_X-diluent Monitoring System RATA Using RM 7E and RM 3B
NOXC, NOXP	20	NOXC Monitoring System RATA Using RM 20*
	7	NOXC Monitoring System RATA Using RM 7
	7A	NOXC Monitoring System RATA Using RM 7A
	7C	NOXC Monitoring System RATA Using RM 7C
	7D	NOXC Monitoring System RATA Using RM 7D
	7E	NOXC Monitoring System RATA Using RM 7E
SO2	6	SO_2 Monitoring System RATA Using RM 6
	6A	SO_2 Monitoring System RATA Using RM 6A
	6C	SO_2 Monitoring System RATA Using RM 6C

* Methods 6C, 7E, and 3A are instrumental test methods, and are the methods of choice for Part 75 RATAs. Other wet chemistry reference methods (i.e., Methods 3, 3B, 6, 6A, 7, 7C, and 7D) are allowed under §75.22. However, wet chemistry methods are seldom, if ever, used, for practical reasons. Note also that Method 20 is no longer available for Part 75 applications.

For flow RATAs use the following codes shown in Table 18 (no other codes are acceptable):

Table 18: Reference Method Codes for Flow RATAs

Code	Commonly Used RATA Method(s)
2	Method 2, without Wall Effects Adjustment
M2H	Method 2, with Measured Method 2H Wall Effects Adjustment
D2H	Method 2, with Default Method 2H Wall Effects Adjustment
2F	Method 2F, without Wall Effects Adjustment
2G	Method 2G, without Wall Effects Adjustment
2FH	Method 2F, with Method 2H Wall Effects Adjustment (either measured or default)
2GH	Method 2G, with Method 2H Wall Effects Adjustment (either measured or default)
2J	Method 2, with Wall Effects Adjustment Factor (WAF) (either measured or default) from Conditional Test Method CTM-041
2FJ	Method 2F, with WAF (either measured or default) from Conditional Test Method CTM-041
2GJ	Method 2G, with WAF (either measured or default) from Conditional Test Method CTM-041

Mean CEM Value *(MeanCEMValue)*
Report the arithmetic mean of CEMS values for the operating level.

Mean RATA Reference Value *(MeanRATAReferenceValue)*
Report the arithmetic mean of reference method values for the operating level.

Mean Difference *(MeanDifference)*
Report the arithmetic mean of the difference data for the operating level.

Standard Deviation Difference *(StandardDeviationDifference)*
Report the standard deviation of difference data for the operating level.

Confidence Coefficient *(ConfidenceCoefficient)*
Report the confidence coefficient value for the operating level.

T Value *(TValue)*
Report the tabulated T-value for the operating level.

Alternative Performance Specification (APS) Indicator *(APSIndicator)*
Report “0” when the result for the operating level was based on relative accuracy as a percentage of the mean of the reference method (RM) value. Use this standard performance specification if it produces a passing result, or if both the standard and alternative specifications are failed.

Report a “1” when the result was determined by taking the absolute value of the difference between the RM and CEM mean values. Use this APS only if the standard performance specification is not met and the APS is met.

Alternative Performance Specification (APS) Code (*APSCode)*
For RATAs conducted on HCl systems, report either "PS15" or "PS18" to indicate the use of the alternate performance specification from either Performance Specification 15 or Performance Specification 18. Leave this field blank for all other parameters.

Relative Accuracy *(RelativeAccuracy)*
Report the relative accuracy percentage, calculated according to section 7.3 of Part 75, Appendix A or (for Hg monitoring systems) according to section 4.1.1.5.2 of Appendix A to 40 CFR Part 63, Subpart UUUUU. For HCl and HF monitoring systems calculate the relative accuracy percentage according to Equations 2-3 through 2-6 in section 12 of Performance Specification 2 in Appendix B to 40 CFR Part 60.

Bias Adjustment Factor *(BiasAdjustmentFactor)*
Report the bias adjustment factor (BAF) at each operating level tested for each passing RATA, as described below:

- For RATAs of CO_2, O_2, Hg, HCl, HF, or H_2O monitoring systems, always report a BAF of 1.000, since a bias test is not required for these systems.
- For RATAs of SO_2, NO_X, and flow monitoring systems, report 1.000 in this field if the bias test at this level passed and report the calculated BAF if the bias test at this level failed.
- For a unit that qualifies as a low emitter of SO_2 or NO_X (see Appendix B to Part 75, Section 2.3.1.2, paragraphs (e) and (f)), if the calculated BAF exceeds 1.111, either the calculated BAF or a default value of 1.111 may be reported as the bias adjustment factor, or report the BAF that will actually be applied to the SO_2 or NO_X emissions data. That is, report either the calculated BAF or a default BAF of 1.111, whichever will be used in the emission calculations (see Section 7.6.5 of Appendix A to Part 75).

Leave this field blank if the operating level did not meet the relative accuracy performance specification.

CO_2 or O_2 Reference Method Code *(CO2OrO2ReferenceMethodCode)*
For flow RATAs with reference method codes 2F, 2FH, 2FJ, 2G, 2GH, 2GJ, and M2H, report the reference method ("3" or "3A") that was used to measure the diluent gas concentrations of CO_2 and O_2 in the stack gas.

Leave this field blank for all other RATAs that do not use the above listed reference methods.

Stack Diameter *(StackDiameter)*
For flow RATAs with reference method codes 2F, 2FH, 2FJ, 2G, 2GH, 2GJ, and M2H, report the stack diameter in feet at the test port location. For rectangular stacks or ducts, report the equivalent diameter, calculated as follows: determine the <u>actual</u> cross-sectional area of the rectangular duct, in ft^2; set this area equal to the area of a circle, ($1/4\ \pi\ d^2$); and solve for "d," the equivalent circular diameter (ft).

Leave this field blank for all other RATAs that do not use the above listed reference methods.

Stack Area *(StackArea)*
For flow RATAs with reference method codes 2F, 2FH, 2FJ, 2G, 2GH, 2GJ, and M2H, report the cross-sectional area of the stack or duct in square feet at the test port location. For a rectangular stack or duct, report the actual cross-sectional area. Do not adjust the area for wall effects.

Leave this field blank for all other RATAs that do not use the above listed reference methods.

Number of Traverse Points *(NumberOfTraversePoints)*
For flow RATAs with reference method code 2J, report the number of Method 1 traverse points used for the test run. The number of Method 1 traverse points reported in this field must equal the value reported in the RECTANGULAR DUCT WAF DATA record in the Monitoring Plan.

For other reference methods, leave this field blank.

Calculated (or Rectangular Duct) WAF *(CalculatedWAF)*
For flow RATAs at circular stacks or ducts, where reference method code 2FH, 2GH, or M2H is used and wall effects measurements are made, report the value of the calculated wall effects adjustment factor (WAF) applied to the runs of this RATA. The term "WAF" is defined in Sections 12.2, 12.7.1, and 12.7.2 of Method 2H as "the wall effects adjustment factor that is applied to the average velocity, unadjusted for wall effects, in order to obtain the final wall effects-adjusted stack gas velocity…" The value of the WAF that is used to adjust the stack gas velocity may either be based on a single run or may be the arithmetic average of multiple WAF determinations.

Note the following instances in which the calculated WAF must be adjusted upward before using it:

- If a calculated WAF is less than 0.9800 and was derived from a partial wall effects traverse (according to Section 8.2.2 of Method 2H), adjust the WAF value upward to 0.9800; and
- If a calculated WAF is less than 0.9700 and was derived from a complete wall effects traverse (according to Section 8.2.3 of Method 2H), adjust the WAF value upward to 0.9700.

For flow RATAs at circular stacks or ducts where reference method code 2FH or 2GH is used, leave this field blank if a default WAF is being applied to the runs of this RATA.

For flow RATAs at rectangular stacks or ducts, where reference method code 2FJ, 2GJ, or 2J is used, report to four decimal places the WAF (either measured or default) that is being applied to all runs of this RATA. The WAF reported in this field must equal the WAF reported in the RECTANGULAR DUCT WAF DATA record in the Monitoring Plan.

For all other flow reference methods codes (i.e., 2, 2F, 2G, D2H) and all other non-flow reference methods, leave this field blank.

Default WAF *(DefaultWAF)*
If a default *WAF* is applied to this test run and to all of the other runs of this RATA and flow RATA reference method code 2FH, 2GH, or D2H is used, report the appropriate WAF value

from Method 2H. Report a default *WAF* of 0.9900 for brick and mortar stacks and 0.9950 for all other stacks.

For flow RATAs with reference method codes 2FH and 2GH, leave this field blank if a calculated WAF was applied to the runs of this RATA.

For all other flow reference method codes (i.e., 2, M2H, 2F, 2G, 2J, 2FJ, 2GJ) and all other non-flow reference methods, leave this field blank.

2.5.4 RATA Run Data

RATA Run Data XML Model

Figure 19: *RATA Run Data* XML Elements

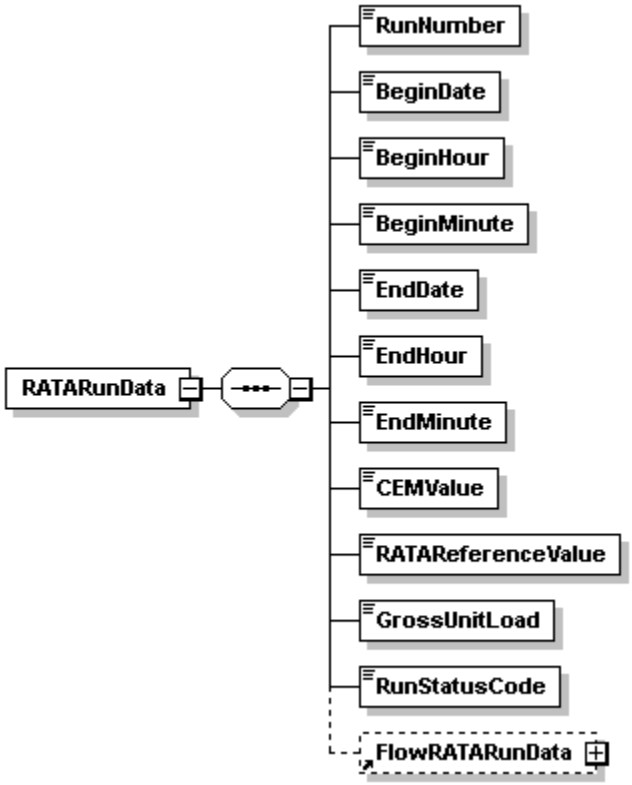

RATA Run Data XML Elements

Run Number *(RunNumber)*
Assign and report a run number to each measurement, beginning with the number "1" for each operating level. Because all runs must be reported whether or not they are used to calculate the relative accuracy test, run numbers must be consecutive and in chronological order. Do not skip a run number.

Begin Date *(BeginDate)*
Report the date on which the run began.

Begin Hour *(BeginHour)*
Report the hour, on the run begin date, in which the run began. Run times must not overlap.

Begin Minute *(BeginMinute)*
Report the minute, during the run begin hour, in which the run began. Run times must not overlap.

End Date *(EndHour)*
Report the date on which the run ended.

End Hour *(EndHour)*
Report the hour, on the run end date, in which the run ended. Run times must not overlap.

End Minute *(EndMinute)*
Report the minute, during the run end hour, in which the run ended. Run times must not overlap.

CEM Value *(CEMValue)*
Report the measured value from the monitoring system being tested in the appropriate units for the run. Report these values to the same precision as is required for hourly data (i.e., to the nearest 0.1 ppm; 0.1µg/scm; 0.1% CO_2, O_2, or H_2O; 0.001 lb/mmBtu; or 1000 scfh, as applicable), except for Hg Sorbent Trap RATAs, for which 2 to 5 decimal places may be reported. For flow monitors installed on rectangular stacks or ducts, if using Conditional Test Method CTM-041 to apply a correction for wall effects, the reference method and flow monitor run values reported in RATA RUN DATA will be wall effects-adjusted flow rates.

RATA Reference Value *(RATAReferenceValue)*
Report the measured value from the reference method against which the monitoring system is being compared. This value should reflect adjustment, as necessary, for moisture and/or calibration bias. Also report these values to the same precision as required for hourly data. For flow monitors installed on rectangular stacks or ducts, if using Conditional Test Method CTM-041 to apply a correction for wall effects, the reference method values reported in RATA RUN DATA will be the wall effects-adjusted flow rates.

Gross Unit Load or Average Velocity at Operating Level *(GrossUnitLoad)*
Report the load level in megawatts or steam load during each RATA run for load-based units. The units for this value should be consistent with the units used to define load levels in the MONITORING LOAD DATA record of the monitoring plan.

For units that do not produce electrical or steam load (e.g., cement kilns, refinery process heaters, etc.), report the average stack gas velocity at the operating level being tested. To determine the appropriate average velocity, first divide the range of operation (which is defined in the MONITORING LOAD DATA record in terms of stack gas velocity) into low, mid, and high operating levels, as described in Section 6.5.2.1(b) of Appendix A. Then, report the velocity at the midpoint of the tested level for each of the RATA runs (e.g., if the RATA is done at the "high" operating level and the high level extends from 40 to 60 ft/sec, report 50 ft/sec as the average velocity for each RATA run).

Run Status Code *(RunStatusCode)*
Report whether the run data were used to determine relative accuracy using one of the codes as shown in Table 19.

Table 19: RATA Run Status Codes and Descriptions

Code	Description
NOTUSED	Run Not Used in RATA Calculation
RUNUSED	Run Used in RATA Calculation
IGNORED	Run Not Used in RATA Calculations. Data can be used in hourly emissions reporting but does not meet QA criteria. (Sorbent Trap Systems Only)

At each operating level, a valid RATA must have a minimum of nine runs with a run status of "RUNUSED" and a maximum of three runs with a run status of "NOTUSED."

2.5.5 Flow RATA Run Data

Flow RATA Run Data XML Model

Figure 20: *Flow RATA Run Data* XML Elements

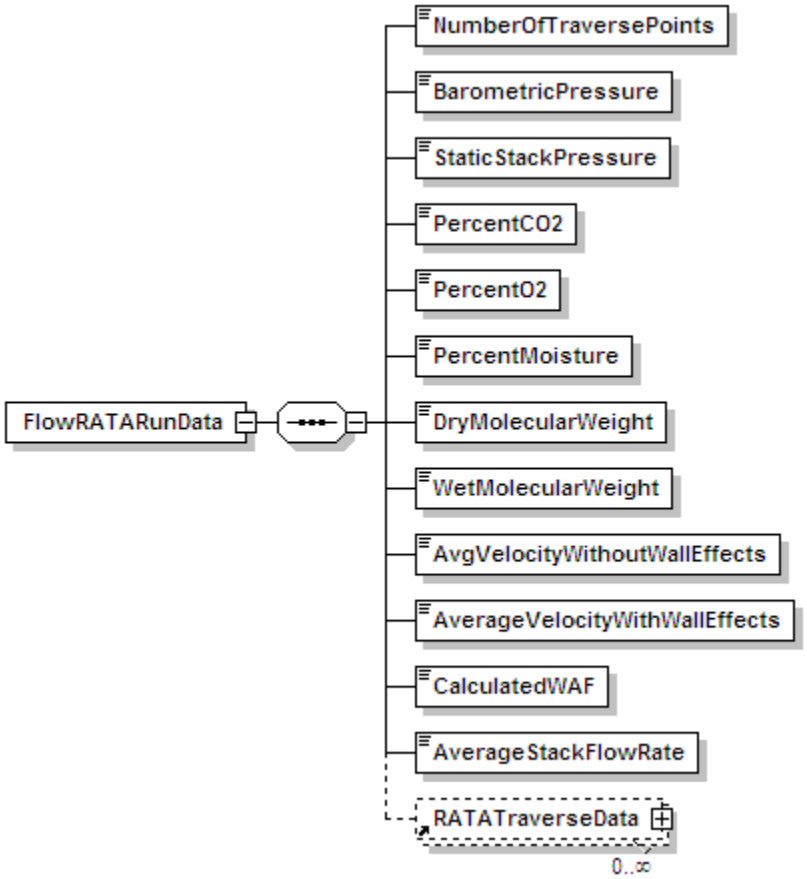

Flow RATA Run Data XML Elements

Number of Traverse Points *(NumberOfTraversePoints)*
Report the number of Method 1 traverse points used for the test run.

Barometric Pressure *(BarometricPressure)*
Report the barometric pressure, in inches of mercury, for the test run.

Stack Static Pressure *(StaticStackPressure)*
Report P_g, stack static pressure, in inches of water, for the run. If P_g is negative, include the minus sign.

Percent CO_2 *(PercentCO2)*
Report the dry basis percent CO_2 in the stack gas for the test run.

Percent O_2 *(PercentO2)*
Report the dry basis percent O_2 in the stack gas for the test run.

Percent Moisture *(PercentMoisture)*
Report the stack gas moisture percentage for the test run.

Dry Molecular Weight *(DryMolecularWeight)*
Report M_d, molecular weight of the stack gas for the test run, on a dry basis. Use Equation 3-1 in Method 3 to calculate M_d.

Wet Molecular Weight *(WetMolecularWeight)*
Report M_s molecular weight of the stack gas for the test run, on a wet basis. Use Equation 2-6 in Method 2 to calculate M_s.

Average Velocity without Wall Effects *(AvgVelocityWithoutWallEffects)*
Report the average velocity for the test run in feet per second, without considering wall effects. The calculated average run velocity is the arithmetic average of the calculated point velocities at the Method 1 traverse points (i.e., the average of all of the velocity values reported for the Calculated Velocity data element in the RATA TRAVERSE DATA record for this test run).

Average Velocity with Wall Effects *(AverageVelocityWithWallEffects)*
For a circular stack using reference method codes 2FH, 2GH, or M2H, report the average run velocity, considering wall effects if a WAF is derived using the data from this test run. Calculate this value using the appropriate point velocity values from the RATA TRAVERSE DATA record's Calculated Velocity and Replacement Velocity data elements, in Equation 2H-17 of Method 2H. Report this value even if you decide to apply a default WAF to all the runs of this RATA.

Leave this field blank for reference methods 2F, 2FJ, 2G, and 2GJ or if no WAF was calculated from the data for this run.

Calculated Wall Effects Adjustment Factor (WAF) *(CalculatedWAF)*
For circular stacks using reference method codes 2FH, 2GH, or M2H, report the WAF if a WAF is calculated using the data from this test run. Derive this value by dividing the adjusted velocity value of the Average Velocity With Wall Effects by the unadjusted velocity value of the Avg Velocity Without Wall Effects in accordance with Equation 2H-19 of Method 2H. Report this value even if you decided to apply a default WAF to all the runs of this RATA.

Leave this field blank for reference methods 2F, 2FJ, 2G, and 2GJ or if no WAF was calculated from the data for this run.

Average Stack Flow Rate *(AverageStackFlowRate)*
Report the average stack gas flow rate for the test run, in scfh (wet basis). If wall effects are not considered, calculate the average flow rate according to the applicable equation in Method 2, 2F, or 2G, using the unadjusted average run velocity from the Avg Velocity Without Wall Effects data element of this record in the calculations. If the stack is circular and wall effects adjustments are applied, however, first obtain the wall effects-adjusted average velocity by multiplying the calculated WAF or the default WAF (as appropriate) by the unadjusted average velocity in accordance with Equation 2H-21 of Method 2H. Then, following the provisions of Section 12.7 in Method 2H, use the final wall effects-adjusted velocity, obtained from Equation 2H-21, in the applicable equation from Method 2, 2F, or 2G to calculate the wall effects-adjusted stack gas flow rate. Report this adjusted flow rate as the Average Stack Flow Rate data element. The flow

rate value reported for this data element must equal the flow rate reported as the RATA Reference Value for this run in the RATA RUN DATA record.

For a rectangular stack or duct, if Conditional Test Method CTM-041 is used to determine a WAF, calculate the average stack gas flow rate (in scfh), adjusted for wall effects, using the following equation:

$$Q_{avg} = 3600\ (A_s)\ (v_{avg})\ (WAF)\ (T_{std} / T_s)\ (P_s / P_{std})$$

Where:

Q_{avg} = Average stack gas flow rate for the run, adjusted for wall effects, wet basis (scfh)
A_s = Stack or duct cross-sectional area at the test location (ft^2)
v_{avg} = Average stack gas velocity for the run, not accounting for wall effects (ft/sec)
WAF = Wall effects adjustment factor (from the RECTANGULAR DUCT WAF DATA record in the monitoring plan)

T_s = Average stack temperature (^{N}R)
T_{std} = Standard temperature (528 ^{N}R)
P_s = Stack pressure, i.e., sum of barometric and static pressures (in. Hg)
P_{std} = Standard pressure (29.92 in. Hg)
3600 = Conversion factor (sec/hr)

Note: The Equation above is essentially the same as Equation 25b in CTM-041, except that the flow rate is expressed in scfh, rather than scf/sec.

2.5.6 RATA Traverse Data

RATA Traverse Data XML Model

Figure 21: *RATA Traverse Data* XML Elements

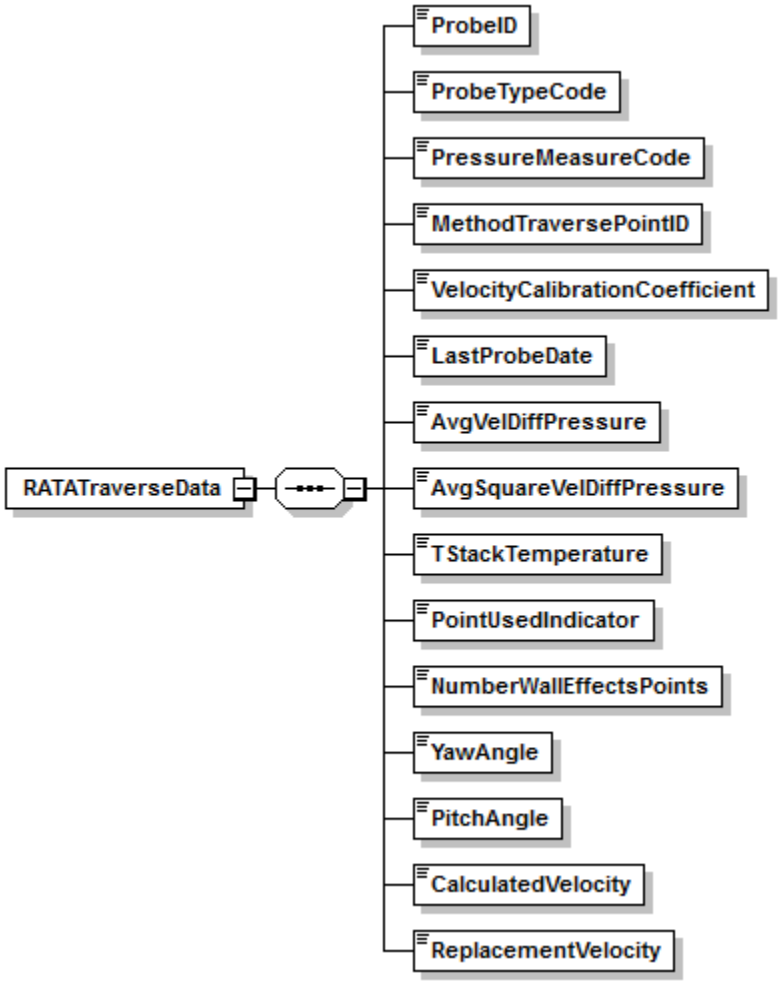

RATA Traverse Data XML Elements

Probe ID *(ProbeID)*
Report the permanent identification number engraved (or otherwise marked) on the probe being used to measure velocity at the traverse point.

Probe Type Code *(ProbeTypeCode)*
Report the probe type code for the probe employed in reference method as shown in Table 20.

Table 20: Reference Method Probe Type Codes and Descriptions

Code	Description
TYPE-SA	Type S (automated)
PRISM	Prism-shaped 3-D pitot (without thermocouple)

Code	Description
PRISM-T	Prism-shaped 3-D pitot (with thermocouple)
PRANDT1	Prandtl
TYPE-SM	Type S (manual)
SPHERE	Spherical 3-D Probe

Pressure Measure Code *(PressureMeasureCode)*
Report the pressure measurement code in Table 21 based on the device employed in the reference method.

Table 21: Pressure Measure Codes and Descriptions

Code	Description
ELEC	Electronic Manometer or Electronic Pressure Transducer
MECH	Mechanical Pressure Gauge (e.g., Magnehelic® gauge)
FLUID	Fluid Manometer

Method Traverse Point ID *(MethodTraversePointID)*
Assign a unique alphanumeric designation to each of the Method 1 traverse points. Maintain the same point numbering scheme throughout the RATA. Use leading zeros to fill in as necessary. For example, if the traverse points are numbered consecutively from one through sixteen, report them as “001,” “002,” “003,” etc.

Velocity Calibration Coefficient *(VelocityCalibrationCoefficient)*
Report the value of the probe or pitot tube velocity calibration coefficient. For a Type-S or Prandtl pitot tube, this will be C_p. For a three-dimensional probe, this will be the appropriate F_2 coefficient.

Last Probe Date *(LastProbeDate)*
Report the year, month, and day of the latest successful wind tunnel calibration of the probe or pitot tube.

Avg Vel Diff Pressure *(AvgVelDiffPressure)*
Report the sight-weighted or integrated average velocity differential pressure, in inches of H_2O, recorded at the Method 1 traverse point, unless the data acquisition system provides a continuous readout of the square root of the differential pressure, in which case, leave this field blank. For Method 2 or 2G, report the average ΔP value. For a three-dimensional probe, report the average value of $(P_1 – P_2)$.

Leave this field blank if you are reporting the integrated average of the square roots of the velocity differential pressures.

Avg Square Vel Diff Pressures *(AvgSquareVelDiffPressure)*
Report the integrated average of the square roots if the data acquisition system electronically provides an integrated average of the square roots of all differential pressure readings recorded at the Method 1 traverse point (rather than providing an average of the differential pressure values themselves).

Leave this field blank if you are reporting the integrated average velocity differential pressure.

T Stack Temperature *(TStackTemperature)*
Report the stack temperature measured at the traverse point, in degrees Fahrenheit.

Point Used Indicator *(PointUsedIndicator)*
For a circular stack, if this test run was used to calculate a WAF (reference method codes 2FH, 2GH, and M2H only), report "1" in this field if the traverse point is one of the four Method 1 points closest to the stack wall.

Otherwise, leave this field blank.

Number of Wall Effects Points *(NumberWallEffectsPoints)*
For a circular stack, if a "1" is reported for the Point Used Indicator, report the number of wall effects points used to generate the replacement velocity at the traverse point. The total number of wall effects points reported for this data element should include: (1) all one-inch incremented points at which actual wall effects measurements were made; (2) all one-inch incremented points at which actual wall effects measurements were not made, but for which the velocity obtained at a subsequent wall effects traverse point was used, as provided under Section 8.7.1.2 of Method 2H; and (3) the traverse point located at d_{rem} (as defined in Section 3.3 of Method 2H), if a velocity measurement was taken at that point.

Otherwise, leave this field blank.

Yaw Angle *(YawAngle)*
Report the measured yaw angle at the traverse point if Method 2F or 2G is used for the velocity traverse. If the yaw angle is negative, be sure to include the minus sign.

For reference method code M2H, leave this field blank.

Pitch Angle *(PitchAngle)*
Report the measured pitch angle of the traverse point if Method 2F is used for the velocity traverse. If the pitch angle is negative, be sure to include the minus sign.

For reference method codes 2G, 2GH, 2GJ, and M2H, leave this field blank.

Calculated Velocity *(CalculatedVelocity)*
Using the appropriate equation from Method 2, 2F, or 2G (as applicable), calculate the velocity at the traverse point, in actual ft/sec. Use the Avg Vel Diff Pressure data element at the traverse point from this record or the Average Square Differential Pressure data element of this record (whichever is appropriate) in the calculations, along with the T Stack Temperature data element of this record and the supporting run-level information. Round off the result to two decimal places. Do not adjust the calculated point velocity for wall effects.

Replacement Velocity *(ReplacementVelocity)*
If a "1" is reported for the Point Used Indicator, report the replacement velocity for the traverse point. Calculate this value in actual ft/sec, corrected for wall effects in accordance with Equation 2H-15 of Method 2H (see also Form 2H-1 or Form 2H-2 and accompanying instructions in Method 2H). Otherwise, leave this field blank.

2.5.7 RATA Test Qualification Data

RATA *Test Qualification Data* Overview

Report a TEST QUALIFICATION DATA record as part of a RATA test to claim an exception from the usual RATA testing requirements. There are three types of claims for which this record is appropriate:

1. For a location that has an installed stack flow monitor and is not exempt from performing multi-load flow RATAs, the required annual flow RATA may be performed at a single load (i.e., the designated normal load) if certain conditions are met. If the unit or stack has operated primarily at a single load for ≥ 85.0 percent of the time since the last annual flow RATA, and if fewer than 20 calendar quarters have elapsed since the last 3-load flow RATA, a single load RATA claim may be submitted. Include this claim along with the results of the single-load flow RATA, to document that the 85.0 percent criterion was met (see Part 75, Appendix B, Section 2.3.1.3(c)(3)). Note that this single-load flow RATA claim is not available to sources that report emissions data on an ozone season-only basis.
2. For unusual situations in which a single-level RATA cannot be performed at the normal operating load level (e.g., due to mechanical problems with the unit, include this claim if the RATA is performed at a different operating level. You must receive permission from EPA to claim this exception.
3. For unusual situations in which a multi-level flow RATA cannot be performed at one or more of the required load levels (e.g., if the unit cannot attain the high-load level, due to mechanical problems), include this claim record to indicate that tested load levels are not consistent with the operating range defined in the MONITORING LOAD DATA record. You must receive permission from EPA to claim this exception. If you obtain permission to claim the exception, divide the available operating range into low, mid and high segments according to Part 75, Appendix A, Section 6.5.2.1, and express the operating level for each RATA (L, M, or H) in terms of the available range.

RATA *Test Qualification Data* XML Model

Figure 22: RATA *Test Qualification Data* XML Elements

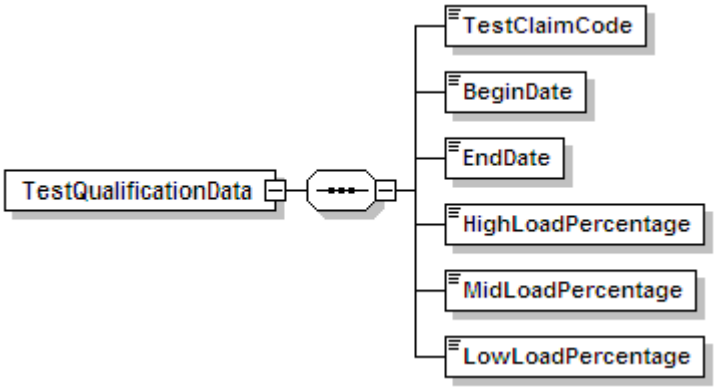

RATA *Test Qualification Data* XML Elements

Test Claim Code *(TestClaimCode)*
Report the appropriate test claim code from Table 22 below.

Table 22: RATA Test Claim Codes and Descriptions

Code	Description
SLC	Single-Level Claim for Flow RATA
NLE	Normal Level Exemption for Single-Level RATA
ORE	Operating Range Exemption for Multi-Level Flow RATA

Begin Date *(BeginDate)*
For test claim code SLC, report the date on which the data collection period began for the flow system. This can be either the date of completion of the last annual flow RATA or the first day of the calendar quarter in which the last annual flow RATA was performed. (For multi-level RATAs, the test completion date is the date on which testing of the last operating level was completed.)

For other claims, leave this field blank.

End Date *(EndDate)*
For test claim code SLC, report the date on which the historical load data collection period ended. This data must be no more than 21 days prior to the date of commencement of the current annual flow RATA (identified by the Test Number in this record). Alternatively, if you began that data collection period on the first day of the quarter of the last annual flow RATA, you may use the last day of the calendar quarter immediately preceding the quarter of this RATA.

For other claims, leave this field blank.

High Load Percentage *(HighLoadPercentage)*
For test claim code SLC, report the percentage of the time that the unit (or stack) operated at the high load (or operating) level (> 60.0 percent of the range of operation defined in the MONITORING LOAD DATA record) in the historical data collection period. See Part 75, Appendix A, Section 6.5.2.1(b).

For other claims, leave this field blank.

Mid Load Percentage *(MidLoadPercentage)*
For test claim code SLC, report the percentage of the time that the unit (or stack) operated at the mid load (or operating) level (> 30.0 percent and ≤ 60.0 percent of the range of operation) in the historical data collection period.

For other claims, leave this field blank.

Low Load Percentage *(LowLoadPercentage)*
For test claim code SLC, report the percentage of the time that the unit (or stack) operated at the low load (or operating) level (0 to 30.0 percent (inclusive) of the range of operation) in the historical data collection period.

For other claims, leave this field blank.

2.5.8 RATA Protocol Gas Data

RATA *Protocol Gas Data* Overview

Report a PROTOCOL GAS DATA record for each cylinder of gas used during the performance of a a RATA conducted using one of the instrumental reference methods (6C, 7E, or 3A). For RATA tests conducted using Method 6C, 7E, or 3A report one record for each cylinder used to determine analyzer calibration error, drift, and system bias. A minimum of three records should be reported, one for each gas level (High, Mid, and Low).

RATA *Protocol Gas Data* XML Model

Figure 23: RATA *Protocol Gas Data* XML Elements

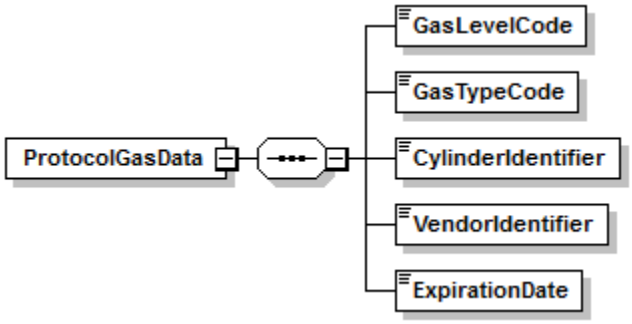

RATA *Protocol Gas Data* XML Elements

Gas Level Code *(GasLevelCode)*
Report a calibration gas level code of HIGH, MID, or LOW to indicate the concentration of the gas in the cylinder. The definition of a high-level, mid-level, and low-level calibration gas can be found in the Part 75 performance specifications for linearity checks and in EPA Reference Method 7E for RATAs.

Gas Type Code *(GasTypeCode)*
Report one or more of the gas type codes in Table 9 of Section 2.3.4 to indicate the type(s) of gas(es) in the cylinder.

Note: If you use a blend of EPA Protocol gases that is not present in this table, you may report a value of “APPVD,” but you will need to contact EPA before submitting the data in order to get permission to use this code.

Cylinder Identifier *(CylinderIdentifier)*
Report the vendor-assigned identification or serial number found on the cylinder. Use only capitalized alphanumeric characters, hyphens, periods, or ampersands. In order to import a file with an ampersand successfully, the ampersand will need to be escaped within the XML. For example, to report the Cylinder ID <AB01234567&>, the XML would read <AB01234567&>. For purified air material, leave this field blank.

Vendor Identifier *(VendorIdentifier)*

For an EPA Protocol gas, report the EPA-assigned PGVP Vendor ID of the production site that supplied the cylinder. PGVP Vendor IDs are year specific, therefore report the assigned PGVP Vendor ID that is applicable on the date the cylinder is certified. An up-to-date list of PGVP Vendor IDs will be located on the EPA website, and can be accessed via the ECMPS Support website. Leave this field blank if the Gas Type Code is ZERO, AIR, SRM, NTRM, GMIS, RGM, or PRM.

Expiration Date *(ExpirationDate)*
For an EPA Protocol gas, SRM, NTRM, GMIS, RGM, or PRM, report the cylinder's expiration date. Leave this field blank if the Gas Type Code is AIR or ZERO.

Specific Considerations

- You must report a PROTOCOL GAS DATA record when using standard reference material, NIST-traceable reference material, gas manufacturer's intermediate standard, research gas mixture, or SRM-equivalent compressed gas primary reference material in place of an EPA Protocol gas. Report all data elements in this record except the PGVP Vendor ID and the Expiration Date of the cylinder.
- You must report a PROTOCOL GAS DATA record when using purified air material as the high-level O_2 gas. Do not report the Cylinder ID, PGVP Vendor ID, and the Expiration Date of the cylinder.
- For tests conducted using EPA Reference Method 3A, 6C, or 7E, report Gas Type Code "ZERO" if a zero gas is used as the low level calibration gas of the reference analyzer. Do not report the Cylinder ID, PGVP Vendor ID, and the Expiration Date of the cylinder.
- When conducting a RATA of a NO_X-diluent monitoring system, report a a PROTOCOL GAS DATA record for each cylinder used to determine analyzer calibration error, drift, and system bias for both the NO_X and the diluent components of the system. If you use separate cylinders for the NO_X and the diluent gas, you should report at least six records, one for each gas level (High, Mid, and Low) of each gas. If you use cylinders that contain a blend of the NO_X and the diluent gas, you should report at least three records, one for each gas level (High, Mid, and Low) of the blend.

2.5.9 RATA Air Emission Testing Data

RATA *Air Emission Testing Data* Overview

Report at least one AIR EMISSION TESTING DATA record for each RATA Test. One record should be reported for each on-site Qualified Individual from an Air Emission Testing Body who conducted or oversaw the test. The Qualified Individual must be qualified for the methods employed in the test.

RATA *Air Emission Testing Data* XML Model

Figure 24: *RATA Air Emission Testing Data* XML Elements

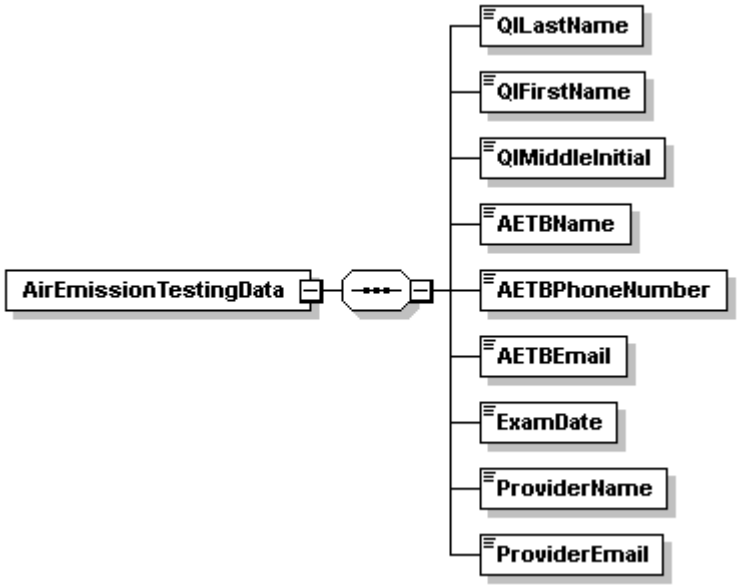

RATA *Air Emission Testing Data* XML Elements

QI Last Name *(QILastName)*
Report the last name of the on-site Qualified Individual who conducted or oversaw the test.

QI First Name *(QIFirstName)*
Report the first name of the on-site Qualified Individual who conducted or oversaw the test.

QI Middle Initial *(QIMiddleInitial)*
Report the middle initial of the on-site Qualified Individual who conducted or oversaw the test.

AETB Name *(AETBName)*
Report the name of the Air Emission Testing Body that performed the test.

AETB Phone Number *(AETBPhoneNumber)*
Report the phone number of the Air Emission Testing Body that performed the test. The number should contain dashes and be formatted as 999-999-9999.

AETB Email *(AETBEmail)*
Report the email address of the Air Emission Testing Body that performed the test.

ExamDate *(ExamDate)*
Report the date that the on-site Qualified Individual took and passed the relevant qualification exam(s) for the reference method(s) that were performed during the test.

Provider Name *(ProviderName)*
Report the name of the provider(s) of the qualification test that took place on the exam date.

Provider Email *(ProviderEmail)*
Report the email address of the provider(s) of the qualification test that took place on the exam date.

2.6 Flow-to-Load Reference

Flow-to-Load Reference Data Overview

For each primary and each redundant backup flow monitoring system, an evaluation of the flow-to-load ratio or the gross heat rate (GHR) is required in each QA operating quarter (as defined in 40 CFR 72.2). Do not analyze data recorded by a redundant backup flow monitor unless emissions data are reported from the system during the quarter. In order to perform the flow-to-load ratio or GHR evaluation, a reference value of the flow-to-load ratio (R_{ref}) or the gross heat rate ($GHR_{ref)}$ must be derived from data collected during the most recent passing normal-load RATA for the flow monitor. This information is reported in a FLOW-TO-LOAD REFERENCE DATA record. The FLOW-TO-LOAD REFERENCE DATA record must be submitted as a "child" of a TEST SUMMARY DATA record.

Flow-to-Load Reference Data XML Model

Figure 25: Flow-to-Load Reference Data XML Structure

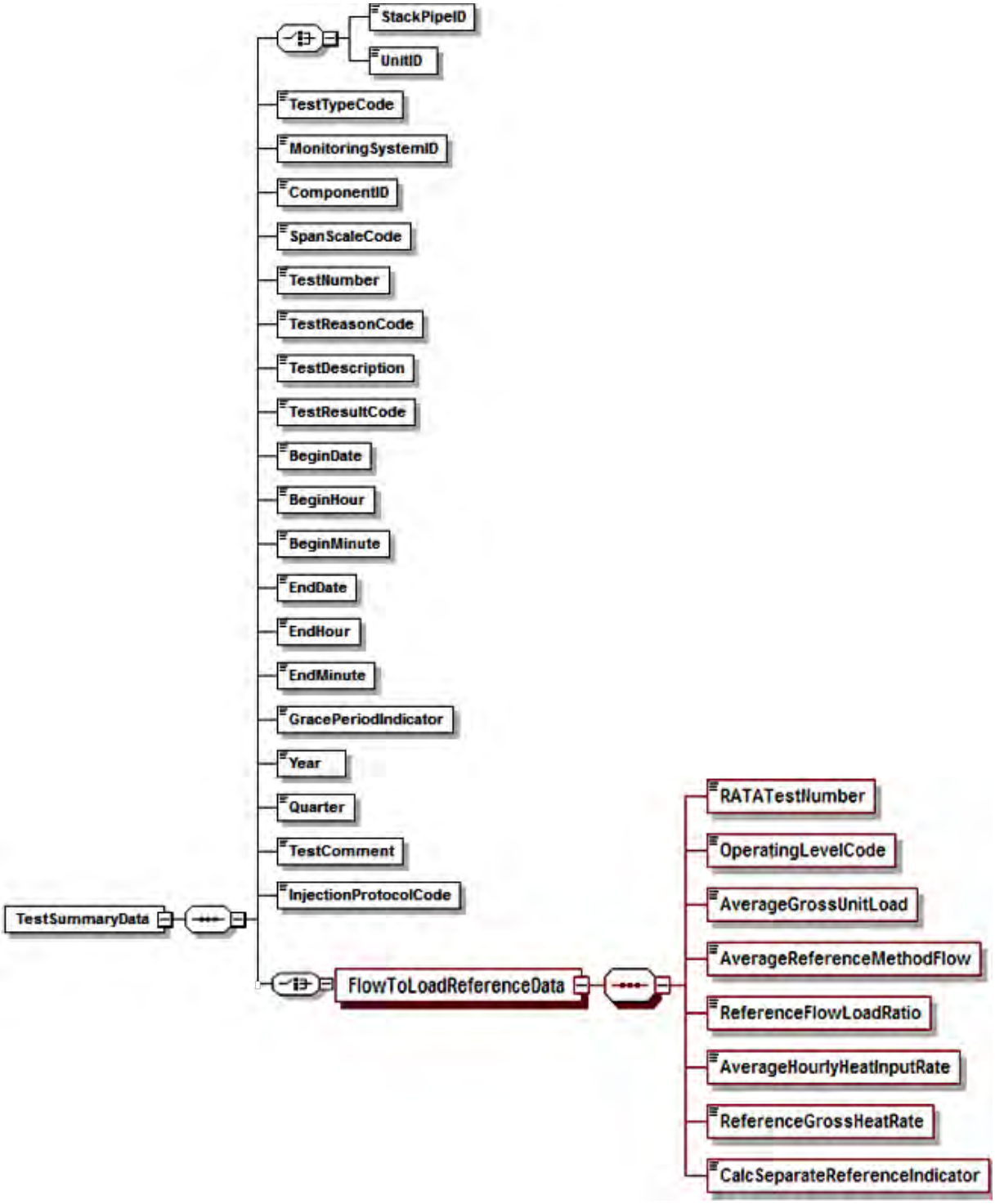

Specific Considerations

- When two levels are designated as normal in the MONITORING LOAD DATA record for the location, report Flow-to-Load Reference Data separately for each level (i.e., in two TEST SUMMARY DATA and FLOW-TO-LOAD REFERENCE DATA records).
- For a flow monitor on a common stack, R_{ref} or GHR_{ref} is derived from the stack flow rate and the combined unit loads for the units serving the stack. Report one TEST SUMMARY DATA and FLOW-TO-LOAD REFERENCE DATA record for the common stack under the Monitoring System ID of the flow monitor at the stack. For example, if CS1 is a common stack serving Units 1 and 2, report these records under the flow monitoring system ID associated with common stack CS1.
- For flow monitors in a multiple stack (MS) configuration, R_{ref} or GHR_{ref} may be calculated for each monitor separately or on a combined basis for the unit, as follows:
    - Derive a single R_{ref} or GHR_{ref} from the sum of the flow rates in the individual stacks or ducts and the unit load, and report the reference value multiple times (i.e., under the Monitoring System ID of the flow monitor at <u>each</u> stack or duct); or
    - Calculate separate reference ratios for each stack, using the average reference method flow rates and unit load during the RATA for the individual flow monitors. If this approach is chosen, report "1" in the Calc Separate Reference Indicator in the FLOW-TO-LOAD REFERENCE DATA record.
- Units that do not produce electrical or steam load (e.g., cement kilns) are exempted from the requirement to perform flow-to-load testing.
- Report either the reference flow-to-load ratio or the reference GHR, but not both, depending upon which approach is used in the quarterly flow-to-load check. In the unusual circumstance where the flow-to-load check is performed using the flow-to-load ratio in one quarter and the GHR in another quarter and both are based on the same reference RATA, report two separate flow-to-load-reference tests (TEST SUMMARY DATA plus a FLOW-TO-LOAD REFERENCE DATA record), one containing the reference GHR and one containing the reference flow-to-load ratio.

2.6.1 Test Summary Data Elements for Flow-to-Load Reference

Unit ID or Stack Pipe ID *(UnitID or StackPipeID)*
Report the Unit ID or Stack Pipe ID that corresponds to the location of the flow monitoring system.

Test Type Code *(TestTypeCode)*
Report the test type code as "F2LREF."

Monitoring System ID *(MonitoringSystemID)*
Report the three-character ID Monitoring System ID assigned to the flow monitor.

Component ID *(ComponentID)*
Leave this field blank. It does not apply to FLOW-TO-LOAD REFERENCE DATA.

Span Scale Code *(SpanScaleCode)*
Leave this field blank. It does not apply to FLOW-TO-LOAD REFERENCE DATA.

Test Number *(TestNumber)*
Report a test number that uniquely identifies this set of flow-to-load reference data for the monitoring location. One method of tracking unique test numbers is to use the System ID as a prefix to the number. The test number may not be reused at this location for another FLOW-TO-LOAD REFERENCE DATA record. (This field is not the last RATA test number reported in the FLOW-TO-LOAD REFERENCE DATA record, although the same number could be used if desired.)

Test Reason Code *(TestReasonCode)*
Leave this field blank. It does not apply to FLOW-TO-LOAD REFERENCE DATA.

Test Description *(TestDescription)*
Leave this field blank. It does not apply to FLOW-TO-LOAD REFERENCE DATA.

Test Result Code *(TestResultCode)*
Leave this field blank. It does not apply to FLOW-TO-LOAD REFERENCE DATA.

Begin Date *(BeginDate)*
Leave this field blank. It does not apply to FLOW-TO-LOAD REFERENCE DATA.

Begin Hour *(BeginHour)*
Leave this field blank. It does not apply to FLOW-TO-LOAD REFERENCE DATA.

Begin Minute *(BeginMinute)*
Leave this field blank. It does not apply to FLOW-TO-LOAD REFERENCE DATA.

End Date *(EndDate)*
Report the run end date of the last run conducted at the normal operating level of the reference RATA. Report the RATA Test Number and Operating Level Code of this operating level in the associated FLOW-TO-LOAD REFERENCE DATA record.

End Hour *(EndHour)*
Report the hour of the last run of the most recent passing RATA conducted at the normal operating level reported in the associated FLOW-TO-LOAD REFERENCE DATA record.

End Minute *(EndMinute)*
Report the minute of the last run of the most recent passing RATA conducted at the normal operating level reported in the associated FLOW-TO-LOAD REFERENCE DATA record.

Grace Period Indicator *(GracePeriodIndicator)*
Leave this field blank. It does not apply to FLOW-TO-LOAD REFERENCE DATA.

Year *(Year)*
Leave this field blank. It does not apply to FLOW-TO-LOAD REFERENCE DATA.

Quarter *(Quarter)*
Leave this field blank. It does not apply to FLOW-TO-LOAD REFERENCE DATA.

Test Comment *(TestComment)*
Report a comment regarding the data if desired.

Injection Protocol Code *(InjectionProtocolCode)*
Leave this field blank. It does not apply to FLOW-TO-LOAD REFERENCE DATA.

2.6.2 Flow-to-Load Reference Data

Flow-to-Load Reference Data XML Model

Figure 26: *Flow-to-Load Reference* Data XML Elements

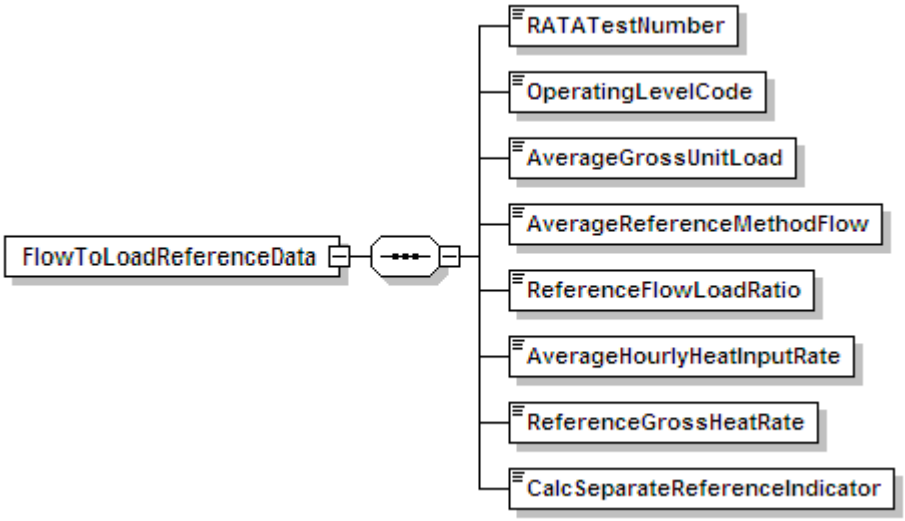

Flow-to-Load Reference Data XML Elements

RATA Test Number *(RATATestNumber)*
Report the Test Number of the reference RATA. For a multiple stack configuration, if performing the test on a combined basis, report the Test Number of the reference RATA conducted at this location.

Operating Level Code *(OperatingLevelCode)*
Report the Operating Level Code (L, M, H, or N, as reported in the applicable RATA SUMMARY DATA record) indicating the operating level from the reference flow RATA that is being used to establish the flow-to-load or gross heat rate reference.

Average Gross Unit Load *(AverageGrossUnitLoad)*
Report L_{avg}, the average gross unit load, in megawatts, 1000 lb/hr of steam or mmBtu/hr thermal output, as appropriate, at the reported operating level during the reference RATA.

For common stacks, report the combined average load of all units that were operating during the RATA.

For a multiple stack configuration, if performing the test on an individual stack basis, determine L_{avg} by summing the gross unit load values for all of the runs at the reported operating level during the reference RATA at this location, and dividing the result by the total number of runs.

For a multiple stack configuration, if performing the test on a combined basis, determine L_{avg} by summing the gross unit load values for all of the runs at the reported operating level during the reference RATAs for <u>all</u> of the multiple stacks, and dividing the result by the total number of

runs (e.g., for two 9-run RATAs performed on stacks MS1 and MS2, add the load values for all 18 RATA runs and divide the result by 18).

Average Reference Method Flow *(AverageReferenceMethodFlow)*
Report the arithmetic mean of the stack flow rates in scfh (Q_{ref}) measured by EPA Reference Method 2 (or its allowable alternatives) at the reported operating level of the reference RATA.

For a multiple stack configuration, if performing the test on a combined basis, calculate the mean reference method flow rate by summing the mean reference method flow rates at the reported operating level measured during the reference RATAs for all of the multiple stacks.

Reference Flow/Load Ratio *(ReferenceFlowLoadRatio)*
If the flow-to-load methodology was used, calculate and report R_{ref} by dividing the average reference method flow rate (Q_{ref}) by the average gross unit load (L_{avg}) and multiplying the result by 10^{-5}. Round the ratio to two decimal places.

Leave this field blank if the gross heat rate methodology for the quarterly flow monitor evaluations was used.

Average Hourly Heat Input Rate *(AverageHourlyHeatInputRate)*
If the gross heat rate methodology was used, use the appropriate equation from Appendix F to Part 75 to calculate HI_{avg}, the average hourly heat input during the reference RATA at the reported operating level. In the Appendix F equation, use the average hourly CO_2 concentration recorded during the RATA test period and the average reference method flow rate. Report this average hourly heat input rate, rounded to one decimal place.

Leave this field blank if the flow-to-load methodology for the quarterly flow monitor evaluations was used.

Reference Gross Heat Rate *(ReferenceGrossHeatRate)*
If the gross heat rate methodology was used, calculate and report GHR_{ref} by dividing average hourly heat input rate (HI_{avg}) by the average gross unit load (L_{avg}) and multiplying the result by 1000. The units of the GHR will be either Btu/kw-hr, Btu/lb of steam or mmBtu per mmBtu of steam load times 1000.

Leave this field blank if the flow-to-load methodology for the quarterly flow monitor evaluations was used.

Calculated Separate Reference Indicator *(CalcSeparateReferenceIndicator)*
For multiple stack configurations, report “1” if performing the flow-to-load test on an individual stack basis or “0” if performing the test on a combined basis. For other configurations, leave this field blank.

2.7 Flow-to-Load Check

Flow-to-Load Check Overview

For each primary and each redundant backup flow monitoring system, a flow-to-load ratio or the gross heat rate quality assurance test is required for every QA operating quarter, as described in Section 2.2.5 of Appendix B to Part 75. Report the results of this check in a TEST SUMMARY DATA record with an associated FLOW-TO-LOAD CHECK DATA record.

When two load levels are designated as normal in the MONITORING LOAD DATA record, perform the quarterly flow-to-load ratio or GHR evaluation at the higher load level if sufficient data are available for the analysis. Otherwise, perform the evaluation at the lower load level. If the test is performed at the higher load level, report a flow-to-load check only for that load level. If there are insufficient data available at the higher load level (i.e., < 168 hours of quality-assured flow rate data within ± ten percent of L_{avg}) and the test is done at the lower load level, report flow-to-load checks for both load levels. Report the test result as “FEW168H” or “EXC168H” (as appropriate) for the higher load level in the TEST SUMMARY DATA record to indicate whether the insufficient data availability was due to a lack of operating hours at the high load level within ± ten percent of L_{avg} or due to the allowable exclusion of data. For the lower normal load report a test result of “PASSED” or “FAILED” (as appropriate) in the TEST SUMMARY DATA record. If there are insufficient data at both load levels, report a flow-to-load check for both load levels, indicating a test result of “FEW168H” or “EXC168H” (as appropriate) for both load levels. (See also Table 23, “Flow-to-Load Result Codes and Descriptions,” on page 89.)

Note that for a multiple stack configuration, if you elect to perform the data analysis on a combined basis, rather than for each individual stack, you will obtain only a single test result, since the flow-to-load ratio or GHR analysis is done at the unit level, not at the stack level. However, you must report this same test result multiple times (i.e., once under each flow Monitoring System ID associated with each of the multiple stacks).

Flow-to-Load Check XML Model

Figure 27: Flow-to-Load Check XML Structure

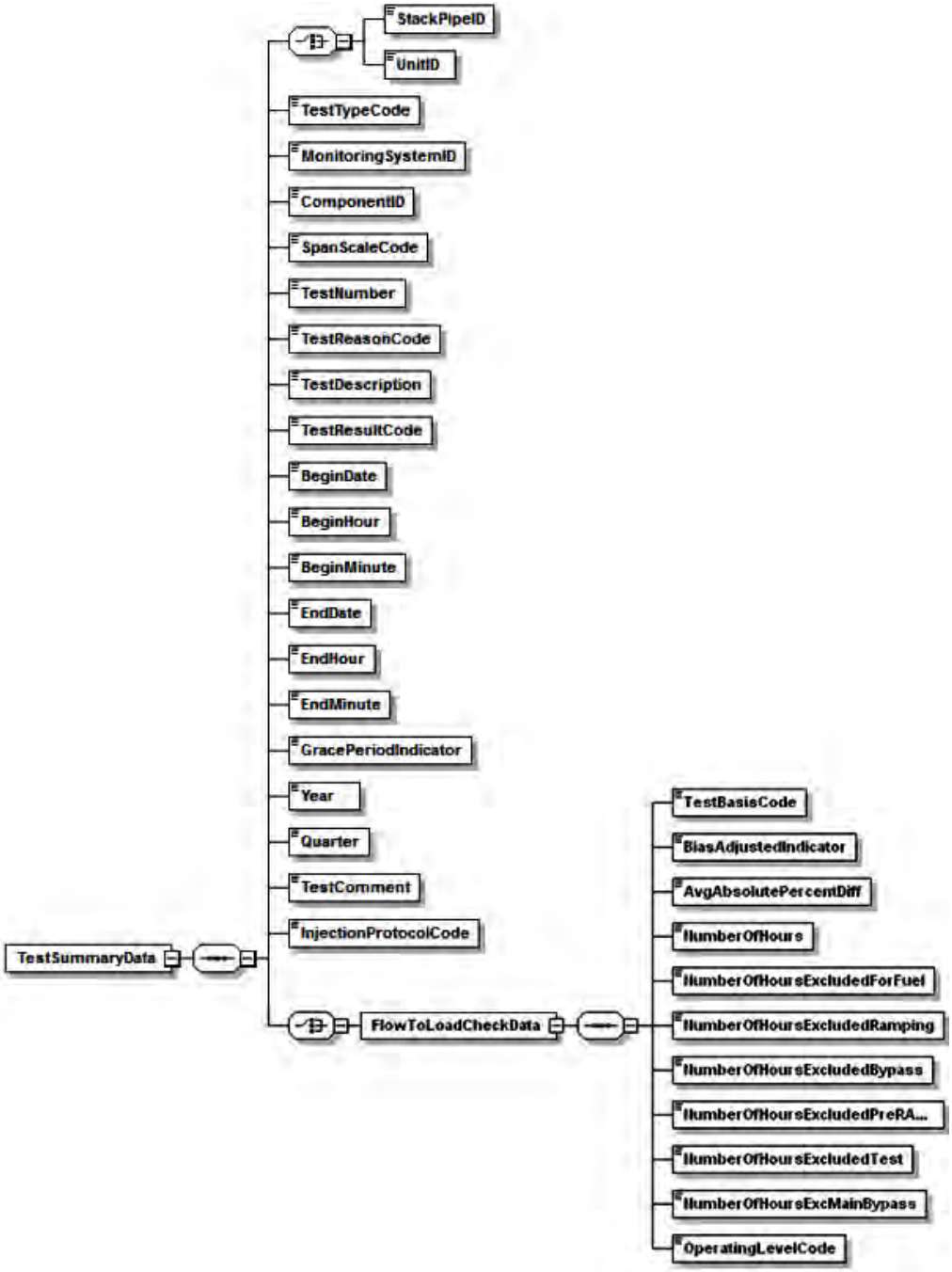

Specific Considerations

Applicability of Flow-to-Load Checks

- Do not report a flow-to-load check for a redundant backup flow monitor unless stack flow data from the monitor are reported in the emissions file for that quarter.

- Units that do not produce electrical or steam load (e.g., cement kilns) are exempted from the requirement to perform flow-to-load testing.

Reporting Requirements for Flow-to-Load Checks

- For units or stacks for which you report data on a year-round basis, report flow-to-load checks for each QA operating quarter (as defined in 40 CFR 72.2). For units or stacks which report data only in the ozone season, report flow-to-load checks only for the second and third calendar quarters, if those quarters are QA operating quarters (see §75.74(c)(3)(iii)).
- For non-QA operating quarters, report a flow-to-load check record using the code of "FEW168H" to indicate that the units or stacks operated for less than 168 hours in the quarter.

Monitors Applying Rectangular Duct WAFs

- For rectangular stacks or ducts with installed flow monitors, when applying a wall effects adjustment factor (WAF) to the data from the flow monitor, the WAF is entered into the programming of the flow monitor as a correction to the stack or duct cross-sectional area. As soon as the wall effects correction is applied, the measured stack gas flow rates at a given load level will decrease, possibly by five percent or more. This reduction in the reported flow rates may adversely impact the quarterly flow-to-load (Q/L) ratio test, and may even cause a test failure, if the data from the most recent normal load flow RATA (i.e., the RATA on which the reference Q/L ratio is based) were not corrected for wall effects. Note that this effect is only temporary, and will disappear when the next normal load flow RATA is done and the appropriate WAF is applied to the reference method data. However, in the interim period while the effect is still present, EPA recommends the following:
    - Report the reference flow-to-load ratio information in FLOW-TO-LOAD REFERENCE DATA in the usual manner. Do not attempt to make any adjustment to the reference method flow rate data recorded during the previous normal load RATA.
    - Perform the quarterly flow-to-load ratio test in the usual manner and assess the impact of the wall effects adjustment that was applied to the stack flow rates. If the test is passed, report the results of the flow-to-load check in the usual manner.
    - If the test is failed, the quarterly flow rate data may be copied, exported outside the DAHS environment, and the wall effects correction may be removed from each hourly flow rate, by dividing it by the WAF. Then, rerun the flow-to-load analysis. Report these results as the flow-to-load check and put a note in the Test Comment indicating that the WAF was removed from the flow rate data before running the flow-to-load ratio test. Keep the results of the data analysis on-site, in a format suitable for inspection.
- In the quarterly emissions file, the wall effects-adjusted flow rates must be reported in the MONITOR HOURLY VALUE DATA record, as measured by the flow monitor and as recorded by the DAHS, whether or not the WAF is removed from the flow rate data to perform the flow-to-load ratio test.

2.7.1 Test Summary Data Elements for Flow-to-Load Check

Unit ID or Stack Pipe ID *(UnitID or StackPipeID)*
Report the Stack Pipe ID or Unit ID of the location of the flow monitoring system.

Test Type Code *(TestTypeCode)*
Report the test type code as "F2LCHK."

Component ID *(ComponentID)*
Leave this field blank. It does not apply to flow-to-load checks.

Monitoring System ID *(MonitoringSystemID)*
Report the three-character Monitoring System ID of the flow monitoring system.

Span Scale Code *(SpanScaleCode)*
Leave this field blank. It does not apply to flow-to-load checks.

Test Number *(TestNumber)*
Assign and report a unique test number for the flow-to-load check. One method of tracking unique test numbers is to use the Monitoring System ID as a prefix to the number. The test number may not be reused at this location for another flow-to-load check.

Test Reason Code *(TestReasonCode)*
Report "QA" as the purpose of the test.

Test Description *(TestDescription)*
Leave this field blank. It does not apply to flow-to-load checks.

Test Result Code *(TestResultCode)*
Report the appropriate code from Table 23 below to indicate the result of the test.

Table 23: Flow-to-Load Test Result Codes and Descriptions

Code	Description
EXC168H	Fewer than 168 hours of flow rate data after allowable exclusions
FAILED	Test was failed
FEW168H	Fewer than 168 hours of flow rate data within ± 10% of L_{avg}
PASSED	Test was passed

If the arithmetic average of the absolute percent differences between the reference value and the hourly values (E_f) is within the applicable limit in Part 75, Appendix B, Section 2.2.5, report the result as "PASSED." If E_f is not within the applicable limit, report the result as "FAILED."

Report the result as "FEW168H" if a flow-to-load analysis is not required for the monitoring system because there are fewer than 168 hours of quality-assured flow rate data recorded by the system during the quarter at loads within ± ten percent of L_{avg}. A test result of "FEW168H" may

be due to infrequent unit operation or infrequent usage of a flow monitoring system (e.g., a redundant backup flow monitoring system which is used for less than 168 hours in a quarter).

Report the result as "EXC168H" if fewer than 168 hours of quality-assured flow rate data remain for analysis after excluding hourly flow rate data from the analysis for the allowable reasons described below in the FLOW-TO-LOAD CHECK DATA record.

Begin Date *(BeginDate)*
Leave this field blank. It does not apply to flow-to-load checks.

Begin Hour *(BeginHour)*
Leave this field blank. It does not apply to flow-to-load checks.

Begin Minute *(BeginMinute)*
Leave this field blank. It does not apply to flow-to-load checks.

End Date *(EndDate)*
Leave this field blank. It does not apply to flow-to-load checks.

End Hour *(EndHour)*
Leave this field blank. It does not apply to flow-to-load checks.

End Minute *(EndMinute)*
Leave this field blank. It does not apply to flow-to-load checks.

Grace Period Indicator *(GracePeriodIndicator)*
Leave this field blank. It does not apply to flow-to-load checks.

Year *(Year)*
Report the year during which the test was performed.

Quarter *(Quarter)*
Report the quarter during which the test was performed.

Test Comment *(TestComment)*
Report a comment regarding the test if desired.

Injection Protocol Code *(InjectionProtocolCode)*
Leave this field blank. It does not apply to flow-to-load checks.

2.7.2 Flow-to-Load Check Data

Flow-to-Load Check Data XML Model

Figure 28: *Flow-to-Load Check Data* XML Elements

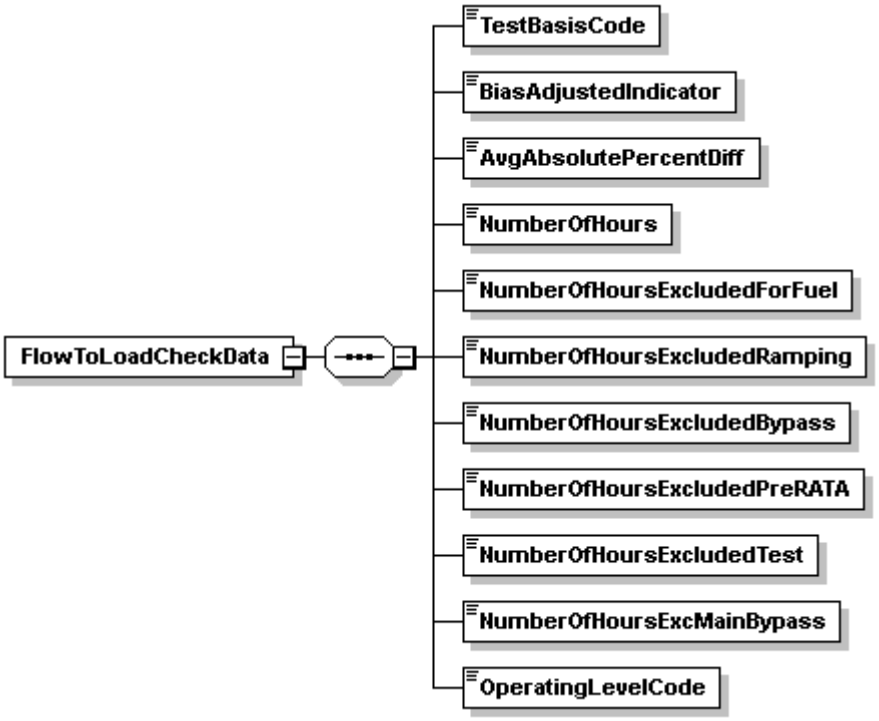

Flow-to-Load Check Data XML Elements

Test Basis Code *(TestBasisCode)*
Report the Test Basis Code for flow-to-load or gross heat rate methodology for the quarterly data analysis as shown in Table 24.

Table 24: Test Basis Indicator Codes and Descriptions for Flow-to-Load Check

Code	Description
H	Gross Heat Rate
Q	Flow-to-Load Ratio

Leave this field blank if you report a result code of "EXC168H" or "FEW168H" in the TEST SUMMARY DATA record.

Bias Adjusted Indicator *(BiasAdjustedIndicator)*
Report whether bias-adjusted flow rate values have been used in the quarterly flow-to-load ratio data analysis ("1" if "yes" or "0" if "no"). All flow-to-load ratios or GHRs must be calculated in a consistent manner (i.e., using unadjusted flow rates in all calculations or using bias-adjusted flow rates in all calculations).

Leave this field blank if you report a result code of "EXC168H" or "FEW168H" in the TEST SUMMARY DATA record.

Average Absolute Percent Difference *(AvgAbsolutePercentDiff)*
Report the value of E_f, which is the arithmetic average of the absolute percent differences between the reference flow-to-load ratio (R_{ref}) or gross heat rate (GHR_{ref}) and the individual hourly flow-to-load ratios or hourly GHRs used in the data analysis.

Leave this field blank if you report a result code of "EXC168H" or "FEW168H" in the TEST SUMMARY DATA record.

Number of Hours *(NumberOfHours)*
Report the number of hours of quality-assured flow rate data that were used for the flow-to-load or GHR evaluation of the flow monitoring system. A minimum of 168 hours of quality-assured flow rate data are required.

Leave this field blank if you report a result code of "EXC168H" or "FEW168H" in the TEST SUMMARY DATA record.

Number of Hours Excluded for Fuel *(NumberOfHoursExcludedForFuel)*
When reporting a result code of "EXC168H," report the number of hours (if any) of flow rate data excluded from the flow-to-load or GHR analysis because the fuel combusted was different than the fuel combusted during the reference flow RATA. A fuel is considered different if it is in a different state of matter (solid, liquid, or gas) from the fuel burned during the RATA or if the fuel is a different classification of coal (e.g., bituminous versus sub-bituminous). Also, for units that co-fire different types of fuel, if the reference RATA was done while co-firing, then hours in which a single fuel was combusted may be excluded from the data analysis (and vice-versa for co-fired hours, if the reference RATA was done while combusting only one type of fuel).

Leave this field blank if you are not claiming any excluded hours for this reason.

Number of Hours Excluded for Ramping *(NumberOfHoursExcludedRamping)*
When reporting a result code of "EXC168H," report the number of hours (if any) of flow rate data excluded from the data analysis because of ramping (i.e., the hourly load differed by more than +/- 15 percent from the load during the previous or subsequent hour). Also use this field to report hours where the unit did not operate within +/- 10 percent of the average load during the most recent normal-load flow RATA.

Leave this field blank if you are not claiming any excluded hours for this reason.

Number of Hours Excluded for Bypass *(NumberOfHoursExcludedBypass)*
When reporting a result code of "EXC168H" for units with wet scrubbers, report the number of hours (if any) of flow rate data excluded from the data analysis because the scrubber was entirely bypassed.

Leave this field blank if you are not claiming any excluded hours for this reason.

Number of Hours Excluded Pre RATA *(NumberOfHoursExcludedPreRATA)*
When reporting a result code of "EXC168H," if a normal load flow RATA of the monitoring system was performed and passed during the quarter, you may exclude all flow rate data recorded by the monitoring system prior to completion of the RATA from the flow-to-load or GHR analysis. Report the number of hours (if any) of flow rate data excluded for this reason.

Leave this field blank if you are not claiming any excluded hours for this reason.

Number of Hours Excluded Test *(NumberOfHoursExcludedTest)*
When reporting a result code of "EXC168H," if a documented repair or major flow monitor component replacement occurred during the quarter to correct a problem with the flow monitoring system accuracy, and if a subsequent abbreviated flow-to-load test was passed in accordance with Section 2.2.5.3 of Appendix B to Part 75 to verify that the monitoring system was generating accurate data, you may exclude all flow rate data recorded by the monitoring system prior to completion of the abbreviated flow-to-load test from the flow-to-load or GHR analysis. Report the number of hours (if any) of flow rate data excluded for this reason.

Leave this field blank if you are not claiming any excluded hours for this reason.

Number of Hours Excluded for Main and Bypass *(NumberOfHoursExcMainBypass)*
When reporting a result code of "EXC168H" for a unit with a main stack and a bypass stack (e.g., a unit with a wet scrubber), report the number of hours (if any) of flow rate data excluded from the flow-to-load or GHR analysis because flue gases were flowing through both stacks simultaneously.

Leave this field blank if you are not claiming any excluded hours for this reason.

Operating Level Code *(OperatingLevelCode)*
Report the Operating Level Code (L, M, H or N, as reported in the corresponding FLOW-TO-LOAD REFERENCE DATA record) indicating the operating level represented by this flow-to-load or gross heat rate check.

2.8 Online Offline Calibration Error Demonstration

Online Offline Calibration Error Demonstration Overview

Use of an offline daily calibration error check (a calibration error test performed during a period in which a unit is not operating) to validate CEMS data, requires a demonstration that the results of an offline calibration are comparable to the results of an online calibration. Report the overall result of this comparison in a TEST SUMMARY DATA record and report results of all gas injections (or flow reference signals) in one ONLINE OFFLINE INJECTION DATA record.

Online Offline Calibration Error Demonstration XML Model

Figure 29: Online Offline Calibration Error Demonstration XML Structure

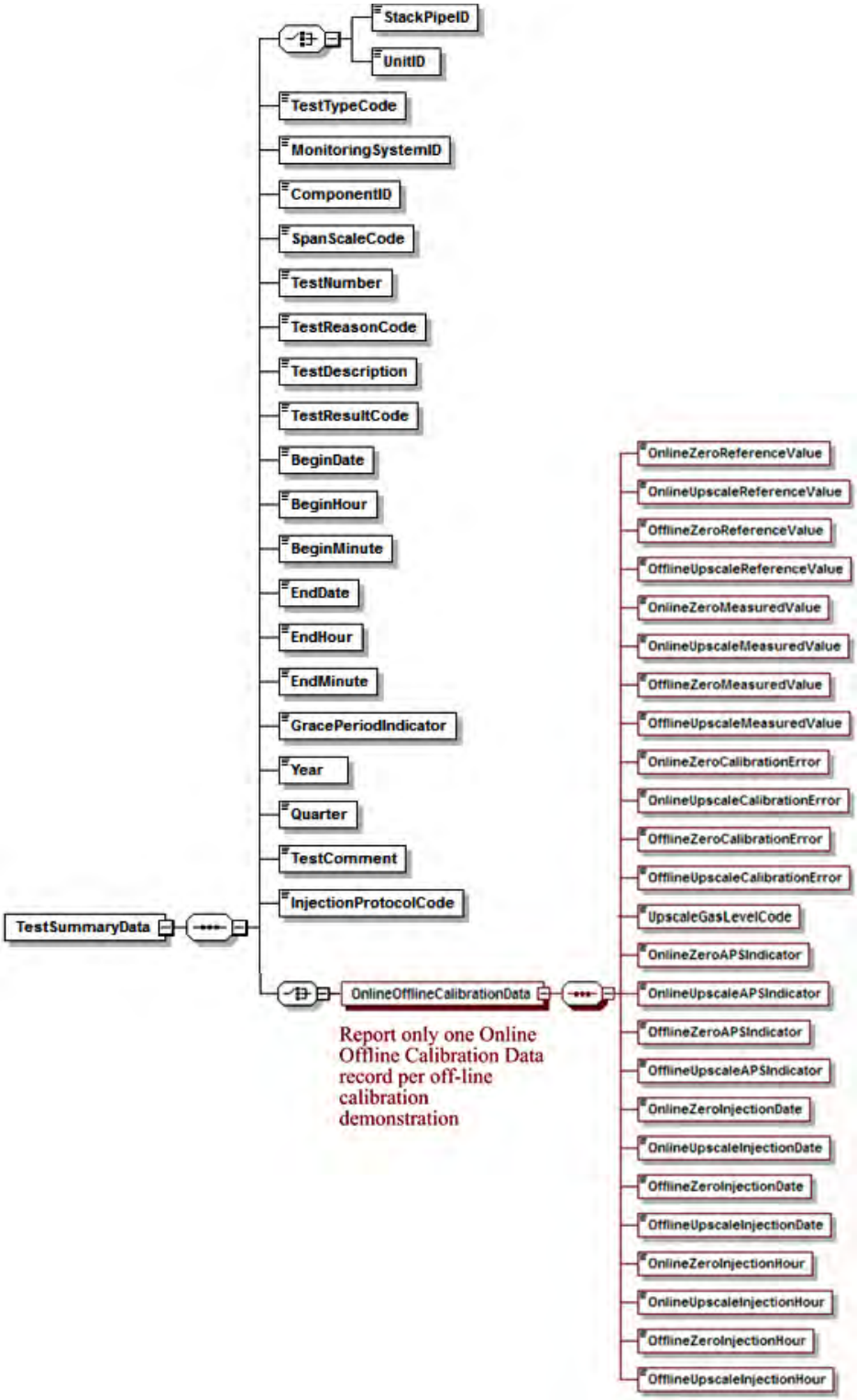

Specific Considerations

Applicability of Online Offline Calibration Error Demonstration

- Report online offline calibration error tests for each range of a dual-range analyzer as separate tests even if both ranges of the analyzer are identified by a single Component ID.
- This demonstration is not applicable to Hg, HCl, and HF CEMS.

2.8.1 Test Summary Data Elements for Online Offline Calibration

Unit ID or Stack Pipe ID *(UnitID or StackPipeID)*
Report the Unit ID or Stack Pipe ID that corresponds to the location of the analyzer.

Test Type Code *(TestTypeCode)*
Report the test type code as "ONOFF."

Monitoring System ID *(MonitoringSystemID)*
Leave this field blank. It does not apply to online offline calibration error tests.

Component ID *(ComponentID)*
Report the three-character Component ID assigned to the analyzer.

Span Scale Code *(SpanScaleCode)*
Report the analyzer range of the component tested as "H" for high or "L" for low. For single range monitors, report the scale as "H" unless you are using the default high range option (see Part 75, Appendix A, Sections 2.1.1.4(f) and 2.1.2.4(e)), in which case report the scale as "L."

Test Number *(TestNumber)*
At each monitoring location and for each test type, report a unique test number for each set of records which comprises a single test. One method of tracking unique test numbers is to use the Component ID as a prefix to the number. The test number may not be reused at this location for another online offline calibration error test.

Test Reason Code *(TestReasonCode)*
Report the purpose of the test using the appropriate code from Table 25.

Table 25: Online Offline Calibration Test Reason Codes and Descriptions

Code	Description
INITIAL	Initial Demonstration
DIAG	Diagnostic (Repeat the demonstration after a change to the CEMS)

Test Description *(TestDescription)*
Leave this field blank. It does not apply to online offline calibration error tests.

Test Result Code *(TestResultCode)*
Report the appropriate code from Table 26 below to indicate the result of the test.

Table 26: Online Offline Calibration Test Result Codes and Descriptions

Code	Description
PASSED	Test was passed and the alternate performance specification was not used.
PASSAPS	Test was passed using the alternative performance specification for one or more gas injection(s).

Note: Report only the results of passed offline/online calibration demonstrations in this record. If the test is failed, then offline calibrations may not be used for data validation until a subsequent online/offline calibration demonstration is passed. If the offline portion of the test fails, this has no effect on data validation and need not be reported, provided that you continue to perform and pass the required online calibrations. If the online portion of the test fails, but is still within the allowable control limits specified for daily calibrations in Section 2.1.4(a) of Part 75, Appendix B, the monitor is not out-of-control -- in that case, simply report the results of the online calibration. However, if the online calibration error is outside the allowable daily control limits, then the monitor is out-of-control. Should that occur, report the results of the failed online calibration error test and use missing data substitution, as appropriate.

Begin Date *(BeginDate)*
Report the date of the first injection in the test.

Begin Hour *(BeginHour)*
Report the hour of the first injection in the test.

Begin Minute *(BeginMinute)*
Leave this field blank. It does not apply to online offline calibration error tests.

End Date *(EndDate)*
Report the date of the last injection in the test.

End Hour *(EndHour)*
Report the hour of the last injection in the test.

End Minute *(EndMinute)*
Leave this field blank. It does not apply to online offline calibration error tests.

Grace Period Indicator *(GracePeriodIndicator)*
Leave this field blank. It does not apply to online offline calibration error tests.

Year *(Year)*
Leave this field blank. It does not apply to online offline calibration error tests.

Quarter *(Quarter)*
Leave this field blank. It does not apply to online offline calibration error tests.

Test Comment *(TestComment)*
Report a comment regarding the test if desired.

Injection Protocol Code *(InjectionProtocolCode)*
Leave this field blank. It does not apply to online offline calibration error tests.

2.8.2 Online Offline Calibration Data

Online Offline Calibration Data XML Model

Figure 30: *Online Offline Calibration Data* XML Elements

Online Offline Calibration Data XML Elements

Submit one ONLINE OFFLINE CALIBRATION DATA record for each demonstration.

Online Zero Reference Value *(OnlineZeroReferenceValue)*
Report the calibration gas or reference signal value used in the online zero-level injection.

Online Upscale Reference Value *(OnlineUpscaleReferenceValue)*
Report the calibration gas or reference signal value used in the online upscale-level injection.

Offline Zero Reference Value *(OfflineZeroReferenceValue)*
Report the calibration gas or reference signal value used in the offline zero-level injection.

Offline Upscale Reference Value *(OfflineUpscaleReferenceValue)*
Report the calibration gas or reference signal value used in the offline upscale-level injection.

Online Zero Measured Value *(OnlineZeroMeasuredValue)*
Report the value measured by the instrument in response to the reference following the online zero-level gas injection or reference signal.

Online Upscale Measured Value *(OnlineUpscaleMeasuredValue)*
Report the value measured by the instrument in response to the reference following the online upscale-level gas injection or reference signal.

Offline Zero Measured Value *(OfflineZeroMeasuredValue)*
Report the value measured by the instrument in response to the reference following the offline zero-level gas injection or reference signal.

Offline Upscale Measured Value *(OfflineUpscaleMeasuredValue)*
Report the value measured by the instrument in response to the reference following the offline upscale-level gas injection or reference signal.

Online Zero Calibration Error *(OnlineZeroCalibrationError)*
Report the results of the calibration error (CE) test for the online zero-level injection, as required by Part 75.

For SO_2, NO_X, and flow monitors, express the results either as a percentage of the span value (i.e., CE), or (for low emitters of SO_2, and NO_X or for low-span differential pressure flow monitors) as the absolute value of the difference between the reference value and the measured value (i.e., |R – A|). If the calibration error meets the standard specification, report the CE even though the test would also pass the alternative specification. Only when the result does not pass the standard specification, but meets the alternative specification, should you report |R - A|. If the test does not pass either specification, report the CE.

For low-span differential pressure-type flow monitors that are calibrated on an H_2O basis and that use the alternative specification: (1) report “0.0” in this field if the value of |R - A| is $\leq$ 0.01 inches of water; or (2) report “0.1” in this field if the value of |R - A| is > 0.01, but $\leq$ 0.10 inches of water; or (3) if the value of |R - A| is > 0.10 inches of water, report the result to the nearest 0.1 in. H_2O. For CO_2 and O_2 monitors, express the result as in terms of absolute percent CO_2 or O_2,

since the results are always determined as the absolute value of the difference between the reference value and the measured value (i.e., |R - A|).

Online Upscale Calibration Error *(OnlineUpscaleCalibrationError)*
Report the results of the calibration error test for the online upscale-level injection, as required by Part 75. (See the discussion under Online Zero Calibration Error element description for more details.)

Offline Zero Calibration Error *(OfflineZeroCalibrationError)*
Report the results of the calibration error test for the offline zero-level injection, as required by Part 75. (See the discussion under Online Zero Calibration Error element description for more details.)

Offline Upscale Calibration Error *(OfflineUpscaleCalibrationError)*
Report the results of the calibration error test for the offline upscale-level injection, as required by Part 75. (See the discussion under Online Zero Calibration Error element description for more details.)

Upscale Gas Level Code *(UpscaleGasLevelCode)*
Indicate whether the upscale gas injections or reference signals are “HIGH” or “MID.” Mid-level gas injections in lieu of the high-level injections may be performed and reported, provided that the mid-level gas is more representative of the actual stack emissions.

Online Zero APS Indicator *(OnlineZeroAPSIndicator)*
Report whether the online zero-level test result was determined using a normal specification “0” or the alternative performance specification “1” allowed under Part 75.

Appendix A to Part 75 specifies that the calibration error of an O_2 or CO_2 monitor is <u>always</u> expressed in percent O_2 or CO_2, rather than as a percentage of span. This is considered to be the “normal” calibration error specification; therefore, “0” should be reported in this field. The alternate performance specification applies only to SO_2, and NO_X pollutant concentration monitors that are considered low-emitters of those pollutants and to low-span differential pressure flow monitors.

Online Upscale APS Indicator *(OnlineUpscaleAPSIndicator)*
Report whether the online upscale-level test result was determined using a normal specification “0” or the alternative performance specification “1” allowed under Part 75. (See discussion under Online Zero APS Indicator for more details.)

Offline Zero APS Indicator *(OfflineZeroAPSIndicator)*
Report whether the offline zero-level test result was determined using a normal specification “0” or the alternative performance specification “1” allowed under Part 75. (See discussion under Online Zero APS Indicator for more details.)

Offline Upscale APS Indicator *(OfflineUpscaleAPSIndicator)*
Report whether the offline upscale-level test result was determined using a normal specification “0” or the alternative performance specification “1” allowed under Part 75. (See discussion under Online Zero APS Indicator for more details.)

Online Zero Injection Date *(OnlineZeroInjectionDate)*
Report the date of the zero-level gas injection for the online calibration test.

Online Upscale Injection Date *(OnlineUpscaleInjectionDate)*
Report the date when the upscale-level gas injection for the online calibration test was completed.

Offline Zero Injection Date *(OfflineZeroInjectionDate)*
Report the date when the zero-level gas injection for the offline calibration test was completed.

Offline Upscale Injection Date *(OfflineUpscaleInjectionDate)*
Report the date when the upscale-level gas injection for the offline calibration test was completed.

Online Zero Injection Hour *(OnlineZeroInjectionHour)*
Report the hour when the zero-level gas injection for the online calibration test was completed.

Online Upscale Injection Hour *(OnlineUpscaleInjectionHour)*
Report the hour was the upscale-level gas injection for the online calibration test was completed.

Offline Zero Injection Hour *(OfflineZeroInjectionHour)*
Report the hour was the zero-level gas injection for the offline calibration test was completed.

Offline Upscale Injection Hour *(OfflineUpscaleInjectionHour)*
Report the hour was the upscale-level gas injection for the offline calibration test was completed.

3.0 Non-CEM Tests

3.1 Appendix E Correlation Test

Appendix E Correlation Test Overview

To establish a NO_X/heat input rate correlation curve based on Appendix E to Part 75, you must perform reference method testing at a minimum of four load levels. Report the overall test information in a TEST SUMMARY DATA record and report the test results at each load level in the APP E CORRELATION TEST SUMMARY DATA record. The number of records required corresponds to the number of loads tested. For example, if the Appendix E test is performed at four unique load levels, report four APP E CORRELATION TEST SUMMARY DATA records. Report the test data from a minimum of three runs for each load level in the APP E CORRELATION TEST RUN DATA record.

Report a companion APPENDIX E HEAT INPUT FROM OIL DATA record for any Appendix E test used to establish a NO_X emission rate curve for use during hours in which oil is combusted. An APPENDIX E HEAT INPUT FROM OIL DATA record verifies the calculation of heat input during the run. There should be one APPENDIX E HEAT INPUT FROM OIL DATA record for each run reported in an APP E CORRELATION TEST RUN DATA record when any of the fuel combusted was oil.

Report a companion APPENDIX E HEAT INPUT FROM GAS DATA record for any Appendix E test used to establish a NO_X emission rate curve for use during hours in which gas is combusted. An APPENDIX E HEAT INPUT FROM GAS DATA record verifies the calculation of heat input during the run. There should be one APPENDIX E HEAT INPUT FROM GAS DATA record for each run reported in an APP E CORRELATION TEST RUN DATA record when any of the fuel combusted was gas.

If you are establishing a correlation curve based on a consistent fuel mixture, report the appropriate combination of APPENDIX E HEAT INPUT FROM OIL DATA record(s) and/or APPENDIX E HEAT INPUT FROM GAS DATA record(s) for each run.

Appendix E Correlation Test XML Model

Figure 31: Appendix E Correlation Test XML Structure

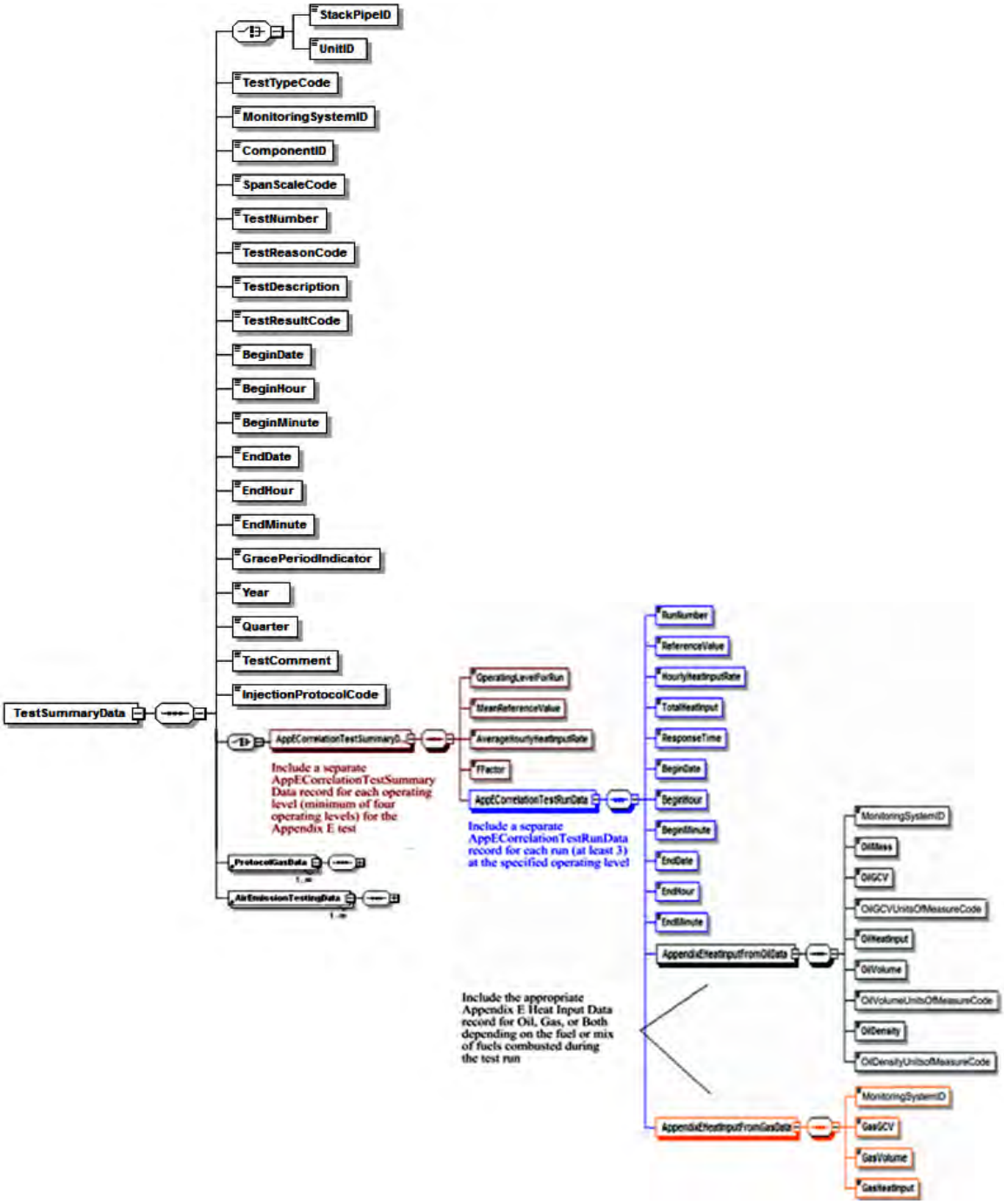

Specific Considerations

Aborted or Invalid Tests

If a test is aborted or if certain test runs are discarded as invalid, keep a record of this in the test log, but do not report partial tests or invalid runs in the APP E CORRELATION TEST RUN DATA record. The only acceptable reasons for aborting a test or discarding test runs are: (1) the reference test method was not used properly or malfunctioned; or (2) a problem with the unit or

process prevented the test from being done at the load level or conditions specified in the regulation.

3.1.1 Test Summary Data Elements for Appendix E Correlation Test

Unit ID or Stack Pipe ID *(UnitID or StackPipeID)*
Report the Unit ID or Stack Pipe ID that corresponds to the test location.

Test Type Code *(TestTypeCode)*
Report the test type code as "APPE."

Monitoring System ID *(MonitoringSystemID)*
Report the three-character Monitoring System ID assigned to the NO_X Appendix E (NOXE) system.

Component ID *(ComponentID)*
Leave this field blank. It does not apply to Appendix E correlation tests.

Span Scale Code *(SpanScaleCode)*
Leave this field blank. It does not apply to Appendix E correlation tests.

Test Number *(TestNumber)*
At each monitoring location and for each test type, report a unique test number for each set of records which comprises a single test. One method of tracking unique test numbers is to use the Monitoring System ID as a prefix to the number. The test number may not be reused at this location for another Appendix E correlation test.

Test Reason Code *(TestReasonCode)*
Report the purpose of the test using the appropriate code from Table 27. Use the code RECERT only for unscheduled retests that are required when the unit operates outside of its quality assurance parameters for more than 16 consecutive unit operating hours, or when a new correlation curve must be generated to represent a significant change in the manner of unit operation or NO_X emissions control.

Table 27: Appendix E Test Reason Codes and Descriptions

Code	Description
INITIAL	Initial Certification
QA	Periodic Quality Assurance
RECERT	Recertification

Test Description *(TestDescription)*
Leave this field blank. It does not apply to Appendix E correlation tests.

Test Result Code *(TestResultCode)*
Leave this field blank. It does not apply to Appendix E correlation tests.

Begin Date *(BeginDate)*
Report the begin date of the first run of the test.

Begin Hour *(BeginHour)*
Report the begin hour of the first run of the test.

Begin Minute *(BeginMinute)*
Report the begin minute of the first run of the test.

End Date *(EndDate)*
Report the end date of the last run of the test.

End Hour *(EndHour)*
Report the end hour of the last run of the test.

End Minute *(EndMinute)*
Report the end minute of the last run of the test.

Grace Period Indicator *(GracePeriodIndicator)*
Leave this field blank. It does not apply to Appendix E correlation tests.

Year *(Year)*
Leave this field blank. It does not apply to Appendix E correlation tests.

Quarter *(Quarter)*
Leave this field blank. It does not apply to Appendix E correlation tests.

Test Comment *(TestComment)*
Report any comments regarding the test. Additionally, for tests conducted after January 1, 2009, EPA encourages use of this field to report the name of the stack testing company, the lead tester and whether testing was conducted in accordance with ASTM D7036.

Injection Protocol Code *(InjectionProtocolCode)*
Leave this field blank. It does not apply to Appendix E correlation tests.

3.1.2 Appendix E Correlation Test Summary Data

App E Correlation Test Summary Data XML Model

Figure 32: *App E Correlation Test Summary Data* XML Elements

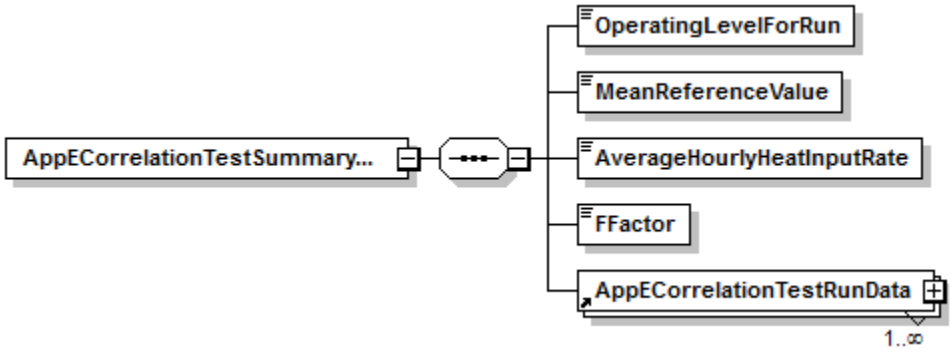

App E Correlation Test Summary Data XML Elements

Operating Level for Run *(OperatingLevelForRun)*
Report the operating level represented by the data, using "1" as the lowest level.

Mean Reference Value *(MeanReferenceValue)*
Calculate and report the average NO_X emission rate (lb/mmBtu) from all runs at this operating level (as reported in the APP E CORRELATION TEST RUN DATA records). Round the average to three decimal places.

Average Hourly Heat Input Rate *(AverageHourlyHeatInputRate)*
Calculate and report the average heat input rate (mmBtu/hr) from all runs at this operating level. Round to one decimal place.

F-Factor *(FFactor)*
Report the F-factor used to calculate the NO_X emission rate for the runs. This F-factor must be consistent with the type of fuel or mixture of fuels combusted during the test.

3.1.3 Appendix E Correlation Test Run Data

App E Correlation Test Run Data XML Model

Figure 33: ***App E Correlation Test Run Data*** **XML Elements**

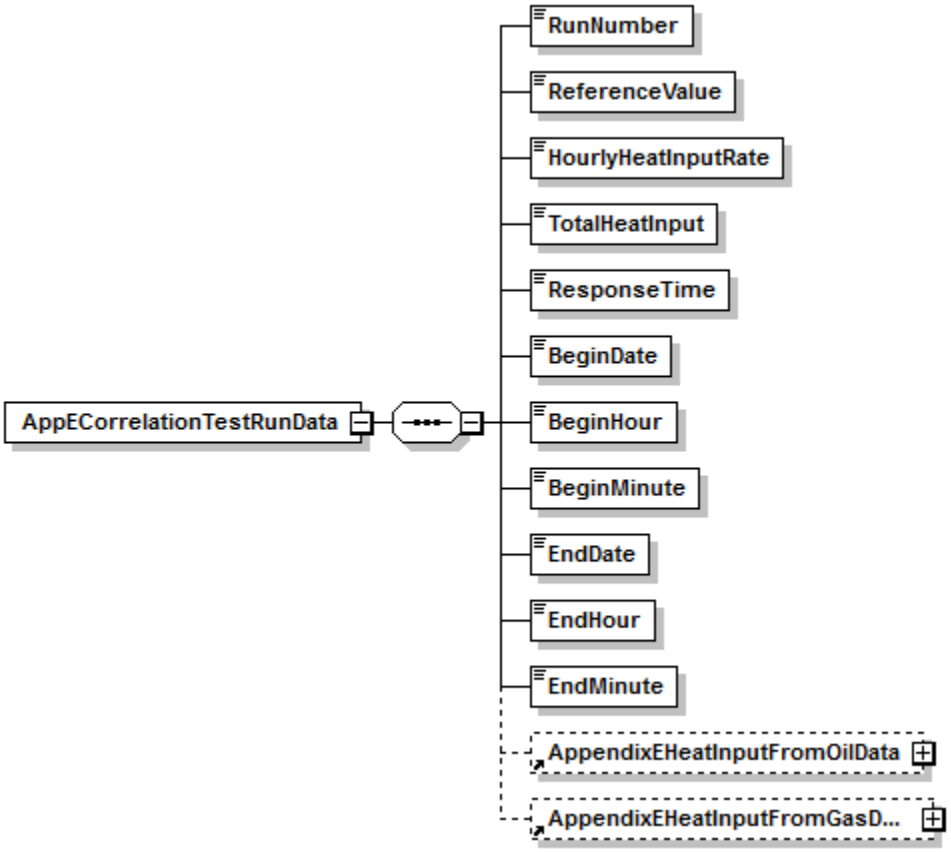

App E Correlation Test Run Data XML Elements

Run Number *(RunNumber)*
Assign a run number to each run. You may assign run numbers either consecutively for each test (i.e., run numbers one through twelve for each of the three runs at four load levels) or for each load level within the test (i.e., one through three for the runs at each load level). At a minimum, runs must be numbered consecutively in time order within a load level. Within a load level, do not skip or repeat a run number.

Reference Value *(ReferenceValue)*
Report the reference method NO_X value for the run in lbs/mmBtu, rounded to three decimal places.

Hourly Heat Input Rate *(HourlyHeatInputRate)*
Report the total heat input divided by the duration of the run (as calculated from the begin and end times) to get the heat input by minute. Multiply this value by 60 minutes to get the Hourly Heat Input Rate.

Total Heat Input *(TotalHeatInput)*
Report the total heat input in mmBtu for the time period of the run. This value should be the sum of the values reported in the APPENDIX E HEAT INPUT FROM OIL DATA records or the APPENDIX E HEAT INPUT FROM GAS DATA records for the run.

Response Time *(ResponseTime)*
Report the response time in seconds, according to Sections 8.2.5 and 8.2.6 of Method 7E in Appendix A-4 to 40 CFR Part 60. This value is used to determine the appropriate sampling time at each point.

Begin Date *(BeginDate)*
Report the date on which the run began.

Begin Hour *(BeginHour)*
Report the hour in which the run began.

Begin Minute *(BeginMinute)*
Report the minute in which the run began.

End Date *(EndDate)*
Report the date on which the run ended.

End Hour *(EndHour)*
Report the hour in which the run ended.

End Minute *(EndMinute)*
Report the minute in which the run ended.

3.1.4 Appendix E Heat Input from Oil Data

Appendix E Heat Input from Oil Data XML Model

Figure 34: ***Appendix E Heat Input from Oil Data*** **XML Elements**

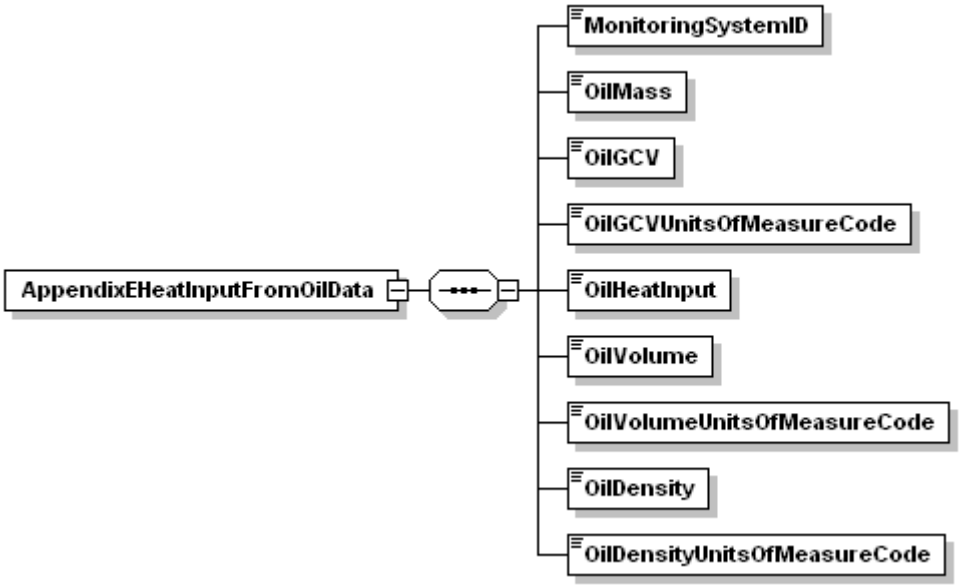

Appendix E Heat Input from Oil Data XML Elements

Monitoring System ID *(MonitoringSystemID)*
Report the three-character Monitoring System ID assigned to the oil fuel flow (OILV or OILM) system used to measure oil flow during the run.

Oil Mass *(OilMass)*
This value is either measured directly by a fuel flowmeter system or calculated from the volume of oil measured by a fuel flowmeter system. All values must be reported in units of pounds (oil mass), not as oil mass flow rate.

Use an equation similar to Equation D-3 in Appendix D to Part 75 to convert oil volume to mass (in lbs), where the density of the oil is determined by the applicable ASTM procedures in Part 75.

Leave this field blank if you use the oil volume and gross calorific value (GCV) to determine heat input for the run.

Oil GCV *(OilGCV)*
Report the heat content or GCV of the oil used to calculate heat input during the run. Report this value in units consistent with the units used to report the mass or volume of oil combusted as described below.

Oil GCV Units of Measure Code *(OilGCVUnitsOfMeasureCode)*
Report the units of measure for GCV which correspond to the mass or volume of oil combusted and are used in the calculation of heat input during the run. Use one of the uppercase codes shown in Table 28.

Table 28: Oil GCV Units of Measure Codes and Descriptions

Code	Description
BTUBBL	Btu per barrel
BTUGAL	Btu per gallon
BTULB	Btu per pound
BTUM3	Btu per cubic meter
BTUSCF	Btu per standard cubic feet

Oil Heat Input *(OilHeatInput)*
Calculate and report the total heat input from oil by multiplying the heat content (GCV) of the fuel by either the oil mass or the oil volume combusted during the run. Report this value in units of mmBtu rounded to one decimal place.

Oil Volume *(OilVolume)*
If the fuel flow system measures the volumetric flow of oil, report the volume of oil combusted during the run as measured.

Leave this blank if the fuel flow system measures mass of oil directly.

Oil Volume Units of Measure Code *(OilVolumeUnitsOfMeasureCode)*
Report the units of measure for volumetric flow using one of the uppercase codes shown in Table 29.

Table 29: Oil Volume Units of Measure Codes and Descriptions

Code	Description
BBL	Barrel
GAL	Gallon
M3	Cubic meter
SCF	Standard cubic feet

Use corresponding units for gross calorific value of the fuel if calculating hourly heat input directly from the volumetric flow.

Oil Density *(OilDensity)*
If you use a volumetric oil flowmeter and convert the volumetric flow rates to mass flow, the density of the oil must be sampled in order to calculate the mass of oil during the run.

Leave this field blank if you calculate heat input directly from the oil volumetric flow rate.

Oil Density Units of Measure Code *(OilDensityUnitsOfMeasureCode)*
If sampling and reporting the density of the oil, report the units of measure for density using one of the uppercase codes in Table 30. Otherwise, leave this field blank. These units must correspond to the units of measure for oil volume as shown by Table 29 in the Oil Volume Units of Measure data element description.

Table 30: Oil Density Units of Measure Codes and Descriptions

Code	Description
LBBBL	Pounds per barrel
LBGAL	Pounds per gallon
LBM3	Pounds per cubic meter
LBSCF	Pounds per standard cubic feet

3.1.5 Appendix E Heat Input from Gas Data

Appendix E Heat Input from Gas Data XML Model

Figure 35: ***Appendix E Heat Input from Gas Data*** **XML Elements**

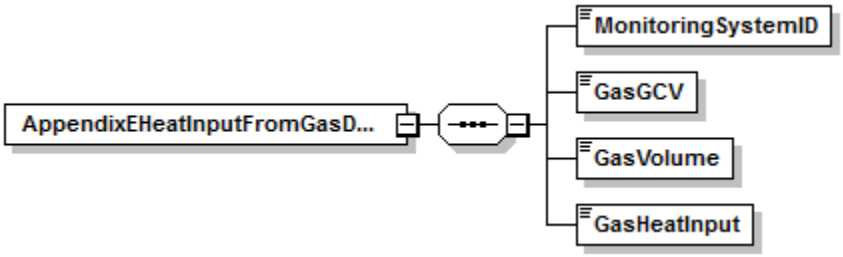

Appendix E Heat Input From Gas Data XML Elements

Monitoring System ID *(MonitoringSystemID)*
Report the three-character Monitoring System ID assigned to the gas fuel flow (GAS) system used to measure gas flow during the run.

Gas GCV *(GasGCV)*
Report the heat content or gross calorific value (GCV) of the gas from the appropriate sample to calculate heat input during the run. Report this value in Btu per 100 scf (BTUHSCF).

Gas Volume *(GasVolume)*
This value is the gas measured directly by a gas fuel flowmeter system during the run. All values must be reported in units of 100 standard cubic feet (gas volumes), not as gas volumetric flow rates.

Gas Heat Input *(GasHeatInput)*
Calculate and report the total heat input from gas by multiplying the heat content (GCV) of the fuel by the volume of gas combusted. Report this value in units of mmBtu rounded to one decimal place.

3.1.6 Appendix E Protocol Gas Data

Appendix E *Protocol Gas Data* Overview

For Appendix E tests conducted using Method 6C, 7E, or 3A report one record for each cylinder used to determine analyzer calibration error, drift, and system bias. A minimum of three records should be reported, one for each gas level (High, Mid, and Low).

Appendix E *Protocol Gas Data* XML Model

Figure 36: Appendix E *Protocol Gas Data* XML Elements

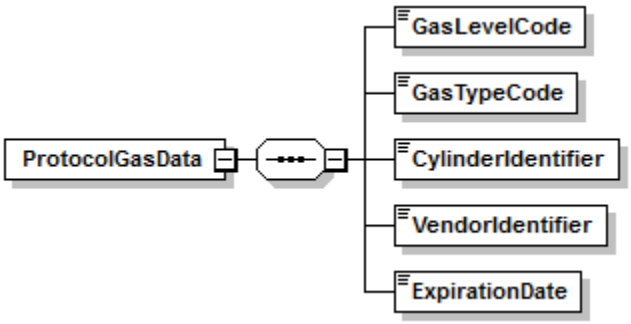

Appendix E *Protocol Gas Data* XML Elements

Gas Level Code *(GasLevelCode)*
Report a calibration gas level code of HIGH, MID, or LOW to indicate the concentration of the gas in the cylinder. The definition of a high-level, mid-level, and low-level calibration gas can be found in the Part 75 performance specifications for linearity checks and in EPA Reference Method 7E for RATAs.

Gas Type Code *(GasTypeCode)*
Report one or more of the gas type codes in Table 9 of Section 2.3.4 to indicate the type(s) of gas(es) in the cylinder.

Note: If you use a blend of EPA Protocol gases that is not present in this table, you may report a value of "APPVD," but you will need to contact EPA before submitting the data in order to get permission to use this code.

Cylinder Identifier *(CylinderIdentifier)*
Report the vendor-assigned identification or serial number found on the cylinder. Use only capitalized alphanumeric characters, hyphens, periods, or ampersands. In order to import a file with an ampersand successfully, the ampersand will need to be escaped within the XML. For example, to report the Cylinder ID <AB01234567&>, the XML would read <AB01234567&>.

For purified air material, leave this field blank.

Vendor Identifier *(VendorIdentifier)*

For an EPA Protocol gas, report the EPA-assigned PGVP Vendor ID of the production site that supplied the cylinder. PGVP Vendor IDs are year specific, therefore report the assigned PGVP Vendor ID that is applicable on the date the cylinder is certified. An up-to-date list of PGVP Vendor IDs will be located on the EPA website, and can be accessed via the ECMPS Support website.

Leave this field blank if the Gas Type Code is ZERO, AIR, SRM, NTRM, GMIS, RGM, or PRM.

Expiration Date *(ExpirationDate)*
For an EPA Protocol gas, SRM, NTRM, GMIS, RGM, or PRM, report the cylinder's expiration date.

Leave this field blank if the Gas Type Code is AIR or ZERO.

Specific Considerations

- You must report a PROTOCOL GAS DATA record when using standard reference material, NIST-traceable reference material, gas manufacturer's intermediate standard, research gas mixture, or SRM-equivalent compressed gas primary reference material in place of an EPA Protocol gas. Report all data elements in this record except the PGVP Vendor ID and the Expiration Date of the cylinder.
- You must report a PROTOCOL GAS DATA record when using purified air material as the high-level O_2 gas. Do not report the Cylinder ID, PGVP Vendor ID, and the Expiration Date of the cylinder.
- For tests conducted using EPA Reference Method 3A, 6C, or 7E, report Gas Type Code "ZERO" if a zero gas is used as the low level calibration gas of the reference analyzer. Do not report the Cylinder ID, PGVP Vendor ID, and the Expiration Date of the cylinder.
- When conducting a RATA of a NO_X-diluent monitoring system, report a a PROTOCOL GAS DATA record for each cylinder used to determine analyzer calibration error, drift, and system bias for both the NO_X and the diluents components of the system. If you use separate cylinders for the NO_X and the diluent gas, you should report at least six records, one for each gas level (High, Mid, and Low) of each gas. If you use cylinders that contain a blend of the NO_X and the diluent gas, you should report at least three records, one for each gas level (High, Mid, and Low) of the blend.

3.1.7 Appendix E Air Emission Testing Data

Appendix E *Air Emission Testing Data* Overview

Report at least one AIR EMISSION TESTING DATA record for each Appendix E Test. One record should be reported for each on-site Qualified Individual from an Air Emission Testing Body who conducted or oversaw the test. The Qualified Individual must be qualified for the methods employed in the test.

Appendix E *Air Emission Testing Data* XML Model

Figure 37: *Appendix E Air Emission Testing Data* XML Elements

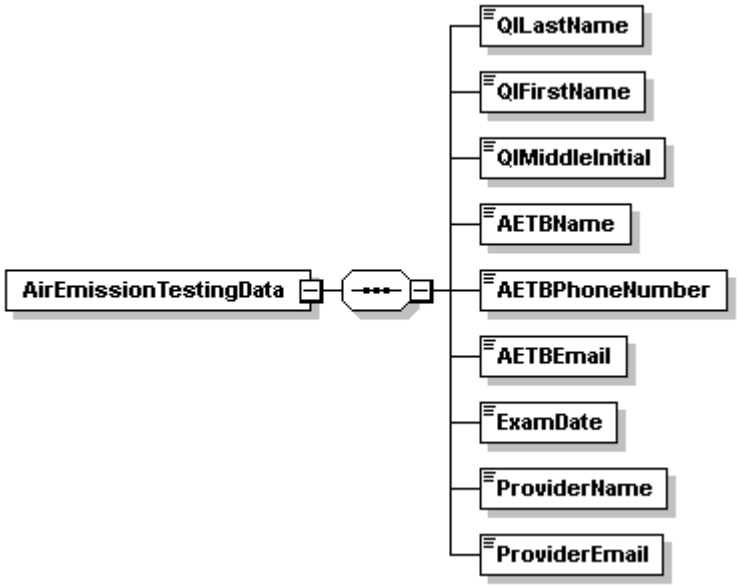

Appendix E *Air Emission Testing Data* XML Elements

QI Last Name *(QILastName)*
Report the last name of the on-site Qualified Individual who conducted or oversaw the test.

QI First Name *(QIFirstName)*
Report the first name of the on-site Qualified Individual who conducted or oversaw the test.

QI Middle Initial *(QIMiddleInitial)*
Report the middle initial of the on-site Qualified Individual who conducted or oversaw the test.

AETB Name *(AETBName)*
Report the name of the Air Emission Testing Body that performed the test.

AETB Phone Number *(AETBPhoneNumber)*
Report the phone number of the Air Emission Testing Body that performed the test. The number should contain dashes and be formatted as 999-999-9999.

AETB Email *(AETBEmail)*
Report the email address of the Air Emission Testing Body that performed the test.

ExamDate *(ExamDate)*
Report the date that the on-site Qualified Individual took and passed the relevant qualification exam(s) for the reference method(s) that were performed during the test.

Provider Name *(ProviderName)*
Report the name of the provider(s) of the qualification test that took place on the exam date.

Provider Email *(ProviderEmail)*
Report the email address of the provider(s) of the qualification test that took place on the exam date.

3.2 Fuel Flowmeter Accuracy Test

Fuel Flowmeter Accuracy Test Overview

If the fuel flowmeter is calibrated with a flowing fluid, report fuel flowmeter accuracy test results in a FUEL FLOWMETER ACCURACY DATA record (i.e., if the flowmeter is calibrated in a laboratory or by an in-line calibration against a reference flowmeter, or both). (See Sections 2.1.5.1 and 2.1.5.2 of Appendix D to Part 75.) The FUEL FLOWMETER ACCURACY DATA record must be submitted as a "child" of a TEST SUMMARY DATA record. If the flowmeter is an orifice, nozzle, or venturi-type that meets the design criteria of AGA Report No. 3, report the results of the transmitter/transducer calibrations and primary element inspections using, respectively, the TRANSMITTER TRANSDUCER DATA record and the TEST SUMMARY DATA record for Miscellaneous Tests.

Fuel Flowmeter Accuracy Test XML Model

Figure 38: Fuel Flowmeter Accuracy Test XML Structure

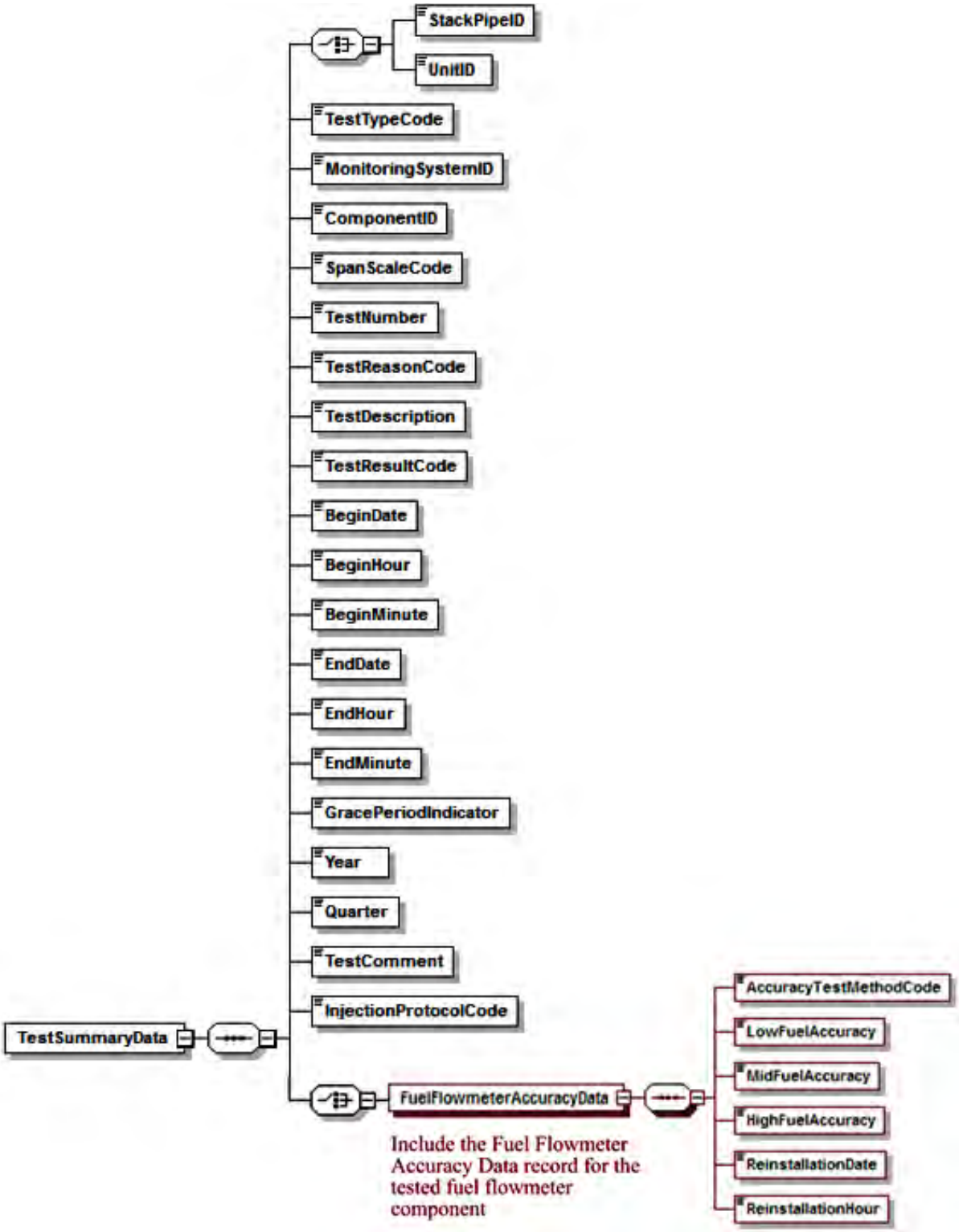

Specific Considerations

Multi-Flowmeter Systems

Report separate Fuel Flowmeter Accuracy tests for each *installed* flowmeter component for fuel flowmeter systems with multiple flowmeter components (e.g., a system with a main supply meter and a return meter, or a system consisting of multiple flowmeters supplying the same type of fuel to a unit or to a group of low mass emissions (LME) units).

Frequency of Testing

- Flowmeter accuracy tests are required once every four "fuel flowmeter QA operating quarters," as defined in 40 CFR 72.2, with a maximum of 20 calendar quarters between successive tests. However, the optional fuel flow-to-load ratio test in Section 2.1.7 of Appendix D may be used to extend the interval between successive accuracy tests up to 20 calendar quarters, irrespective of the number of fuel flowmeter QA operating quarters that have elapsed since the previous test.
- Do *not* report accuracy test results if the meter is temporarily put into storage after being recalibrated (i.e., if the fuel flowmeter component is not active and is therefore not part of the monitoring plan). A fuel flowmeter QA operating quarter is counted against a flowmeter only when the meter has been re-installed, not if it is in storage (refer to the Part 75 Emissions Monitoring Policy Manual).

3.2.1 Test Summary Data Elements for Fuel Flowmeter Accuracy

Unit ID or Stack Pipe ID *(UnitID or StackPipeID)*
Report the Unit ID or Stack Pipe ID that corresponds to the test location.

Test Type Code *(TestTypeCode)*
Report the test type code as "FFACC."

Monitoring System ID *(MonitoringSystemID)*
Leave this field blank. It does not apply to fuel flowmeter accuracy tests.

Component ID *(ComponentID)*
Report the three-character Component ID assigned to the fuel flowmeter.

Span Scale Code *(SpanScaleCode)*
Leave this field blank. It does not apply to fuel flowmeter accuracy tests.

Test Number *(TestNumber)*
At each monitoring location and for each test type, report a unique test number for each set of records which comprises a single test. One method of tracking unique test numbers is to use the Component ID as a prefix to the number. The test number may not be reused at this location for another fuel flowmeter accuracy check.

Test Reason Code *(TestReasonCode)*
Report the purpose of the test using the appropriate code from Table 31. If the test is both a periodic quality assurance test and a recertification test, report that the test is a recertification test. If the test is both a periodic quality assurance test and a diagnostic test, report that the test is a periodic quality assurance test.

Table 31: Fuel Flowmeter Accuracy Test Reason Codes and Descriptions

Code	Description
INITIAL	Initial Certification
DIAG	Diagnostic
QA	Periodic Quality Assurance
RECERT	Recertification

Test Description *(TestDescription)*
Leave this field blank. It does not apply to fuel flowmeter accuracy tests.

Test Result Code *(TestResultCode)*
Report the appropriate code from Table 32 to indicate the result of the test.

Table 32: Fuel Flowmeter Accuracy Test Result Codes and Descriptions

Code	Description
ABORTED	Test was aborted due to problems with the installed monitoring system (in-line tests at the affected facility, only)
FAILED	Test was failed
PASSED	Test was passed

Note that for in-line tests at the affected facility, the monitoring system is considered out-of-control when a test is aborted due to a problem with a flowmeter. If aborted due to problems with the process or with the reference flowmeter, do not report the test.

Begin Date *(BeginDate)*
Leave this field blank. It does not apply to fuel flowmeter accuracy tests.

Begin Hour *(BeginHour)*
Leave this field blank. It does not apply to fuel flowmeter accuracy tests.

Begin Minute *(BeginMinute)*
Leave this field blank. It does not apply to fuel flowmeter accuracy tests.

End Date *(EndDate)*
Report the date when the test was completed.

End Hour *(EndHour)*
Report the hour when the test was completed.

End Minute *(EndMinute)*
Report the minute when the test was completed.

Grace Period Indicator *(GracePeriodIndicator)*
Leave this field blank. It does not apply to fuel flowmeter accuracy tests.

Year *(Year)*
Leave this field blank. It does not apply to fuel flowmeter accuracy tests.

Quarter *(Quarter)*
Leave this field blank. It does not apply to fuel flowmeter accuracy tests.

Test Comment *(TestComment)*
Report a comment regarding the test if desired.

Injection Protocol Code *(InjectionProtocolCode)*
Leave this field blank. It does not apply to fuel flowmeter accuracy tests.

3.2.2 Fuel Flowmeter Accuracy Data

Fuel Flowmeter Accuracy Data XML Model

Figure 39: *Fuel Flowmeter Accuracy Data* XML Elements

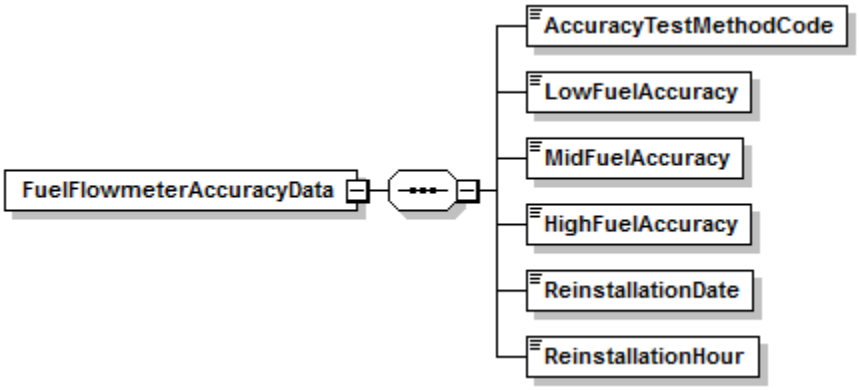

Fuel Flowmeter Accuracy Data XML Elements

Accuracy Test Method Code *(AccuracyTestMethodCode)*
Report the type of test using the uppercase codes in Table 33.

Table 33: Accuracy Test Method Codes and Descriptions

Code	Description
AGA7	AGA Report No. 7, Measurement of Natural Gas by Turbine Meter
API	American Petroleum Instituted Method Listed in Appendix D, Section 2.1.5.1
ASME	For an ASME Method Listed in Appendix D, Section 2.1.5.1
ILMMF	In-line (on-site) Comparison Against a Master Meter -- at Facility
ISO	International Organization for Standardization Method Listed in Appendix D, Section 2.1.5.1
LCRM	Laboratory Comparison Against a Reference Meter
NIST	NIST-Traceable Method, Approved by Petition Under 75.66

Low Fuel Accuracy *(LowFuelAccuracy)*
Report the accuracy as a percentage of upper range value, using Equation D-1 of Appendix D. If accuracy testing is done at two or more low-range fuel flow rates, report the highest accuracy from all of the low-level test results in this field and do not report the other low-level results. Round to one decimal place.

For aborted tests, leave this field blank.

Mid Fuel Accuracy *(MidFuelAccuracy)*
Report the accuracy as a percentage of upper range value, using Equation D-1 of Appendix D.

If accuracy testing is done at two or more mid-range fuel flow rates, report the highest accuracy from all of the mid-level test results in this field and do not report the other mid-level results. Round to one decimal place.

For aborted tests, leave this field blank.

High Fuel Accuracy *(HighFuelAccuracy)*
Report the accuracy as a percentage of upper range value, using Equation D-1 of Appendix D.

If accuracy testing is done at two or more high-range fuel flow rates, report the highest accuracy from all of the high-level test results in this field and do not report the other high-level results. Round to one decimal place.

For aborted tests, leave this field blank.

Reinstallation Date *(ReinstallationDate)*
For laboratory calibrations that were not performed in-line at the facility, report the date that the fuel flowmeter was reinstalled.

For in-line tests, leave this field blank.

Reinstallation Hour *(ReinstallationHour)*
Report the hour that the fuel flowmeter was reinstalled.

For in-line tests, leave this field blank.

3.3 Transmitter Transducer Test

Transmitter Transducer Accuracy Test Overview

For orifice, nozzle, and venturi-type fuel flowmeters, that conform to AGA Report No.3, the owner or operator may opt to certify the meters by calibrating the transmitters (or transducers) using NIST-traceable equipment and performing a visual inspection of the primary element, in lieu of calibrating the meters with a flowing fluid. If this option is chosen, use a TEST SUMMARY DATA record and the TRANSMITTER TRANSDUCER DATA record, to report the results of the transmitter or transducer accuracy tests, performed according to Section 2.1.6.1 of Appendix D to Part 75.

Transmitter Transducer Accuracy Test XML Model

Figure 40: Transmitter Transducer Accuracy Test XML Structure

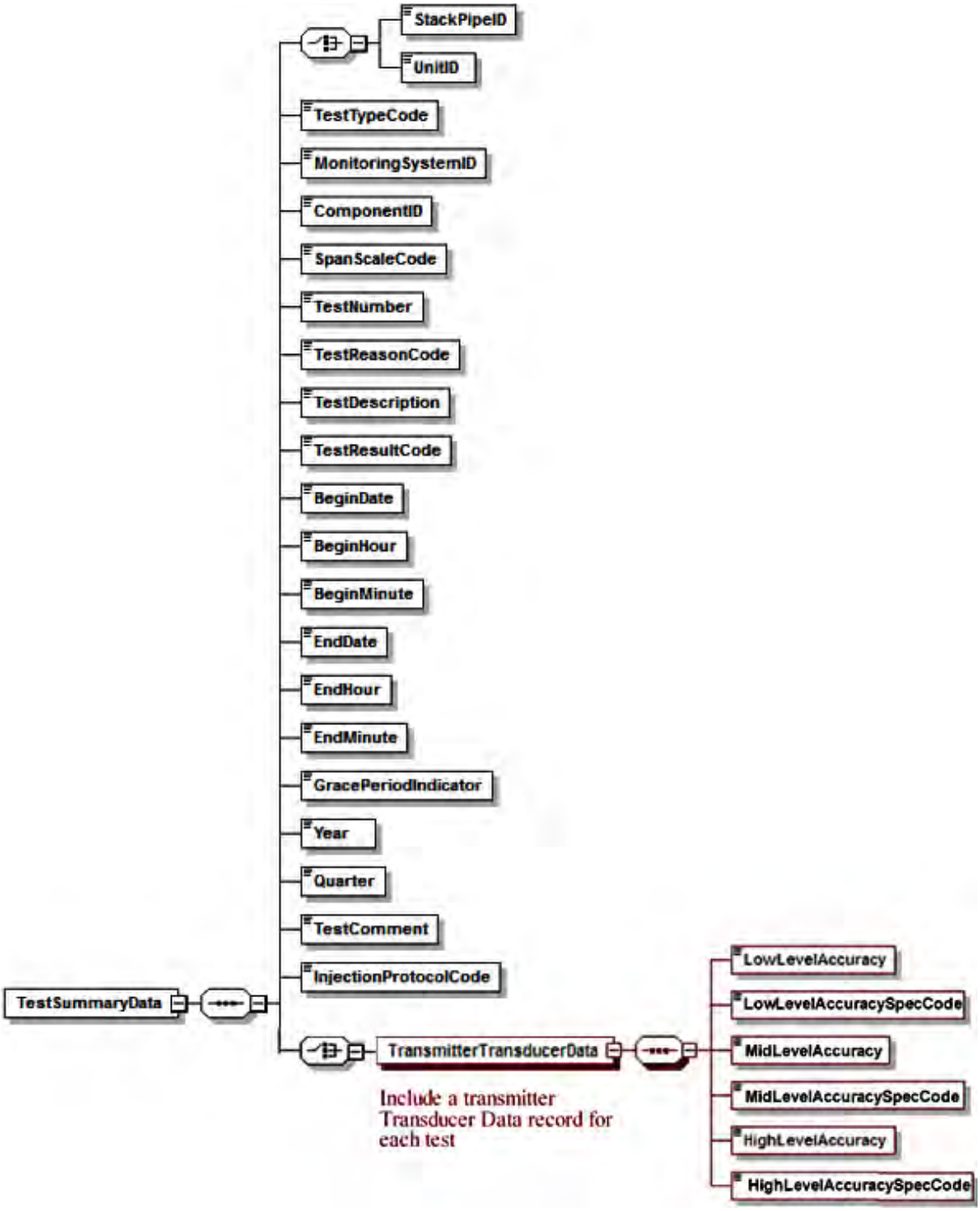

Specific Considerations

Frequency of Testing

- Transmitter/transducer accuracy tests are required once every four "fuel flowmeter QA operating quarters" (as defined in §72.2 of Part 75) with a maximum of 20 calendar quarters between successive tests. However, the optional fuel flow-to-load ratio test in Section 2.1.7 of Appendix D may be used to extend the interval between successive accuracy tests up to 20 calendar quarters, irrespective of the number of fuel flowmeter QA operating quarters that have elapsed since the previous test. Submit one TRANSMITTER TRANSDUCER DATA record for each transmitter or transducer accuracy test performed.
- For a combined cycle combustion turbine (CT) with a duct burner (DB), if the same fuel is combusted in both the turbine and the duct burner, show the CT and DB fuel flowmeters as separate components of the same monitoring system. In this case, both flowmeters must be up-to-date on their required QA tests to maintain an "in-control" QA status for the system. The interval between the required QA tests is determined in the same way for both components. The number of hours that the fuel is combusted during the quarter determines whether a "QA quarter" is counted against a particular flowmeter, not the number of hours that the flowmeter is used.

Example: A combined cycle turbine with a duct burner combusts only natural gas. In the third-quarter of 2007, natural gas is combusted for 250 hours in the unit. The duct burner operates only for 50 hours. In this case, since natural gas was combusted in the unit for > 168 hours, a fuel flowmeter QA operating quarter is counted against both the CT and DB flowmeters, even though the DB flowmeter was used for only 50 hours.

3.3.1 Test Summary Data Elements for Transmitter Transducer Test

Unit ID or Stack Pipe ID *(UnitID or StackPipeID)*
Report the Unit ID or Stack Pipe ID that corresponds to the test location.

Test Type Code *(TestTypeCode)*
Report the test type code as "FFACCTT."

Monitoring System ID *(MonitoringSystemID)*
Leave this field blank. It does not apply to transmitter transducer tests.

Component ID *(ComponentID)*
Report the three-character Component ID assigned to the fuel flowmeter.

Span Scale Code *(SpanScaleCode)*
Leave this field blank. It does not apply to transmitter transducer tests.

Test Number *(TestNumber)*
At each monitoring location and for each test type, report a unique test number for each set of records which comprises a single test. One method of tracking unique test numbers is to use the Component ID as a prefix to the number. The test number may not be reused at this location for another transmitter transducer test.

Test Reason Code *(TestReasonCode)*
Report the purpose of the test using the appropriate code from Table 34. If the test is both a periodic quality assurance test and a recertification test, report that the test is a recertification test. If the test is both a periodic quality assurance test and a diagnostic test, report that the test is a periodic quality assurance test.

Table 34: Transmitter Transducer Test Reason Codes and Descriptions

Code	Description
INITIAL	Initial Certification
DIAG	Diagnostic
QA	Periodic Quality Assurance
RECERT	Recertification

Test Description *(TestDescription)*
Leave this field blank. It does not apply to transmitter transducer tests.

Test Result Code *(TestResultCode)*
Report the appropriate code from Table 35 below to indicate the result of the test. Tests aborted due to problems with the transmitters or transducers are counted as test failures and result in an out-of-control status for the monitoring system. Do not report the results of tests that are aborted due to problems with the process or with the calibration equipment.

Table 35: Transmitter Transducer Test Result Codes and Descriptions

Code	Description
ABORTED	Test was aborted
FAILED	Test was failed
PASSED	Test was passed

Begin Date *(BeginDate)*
Leave this field blank. It does not apply to transmitter transducer tests.

Begin Hour *(BeginHour)*
Leave this field blank. It does not apply to transmitter transducer tests.

Begin Minute *(BeginMinute)*
Leave this field blank. It does not apply to transmitter transducer tests.

End Date *(EndDate)*
Report the date when the test was completed.

End Hour *(EndHour)*
Report the hour when the test was completed.

End Minute *(EndMinute)*
Report the minute when the test was completed.

Grace Period Indicator *(GracePeriodIndicator)*
Leave this field blank. It does not apply to transmitter transducer tests.

Year *(Year)*
Leave this field blank. It does not apply to transmitter transducer tests.

Quarter *(Quarter)*
Leave this field blank. It does not apply to transmitter transducer tests.

Test Comment *(TestComment)*
Report a comment regarding the test if desired.

Injection Protocol Code *(InjectionProtocolCode)*
Leave this field blank. It does not apply to transmitter transducer tests.

3.3.2 Transmitter Transducer Data

Transmitter Transducer Data XML Model

Figure 41: *Transmitter Transducer Data* XML Elements

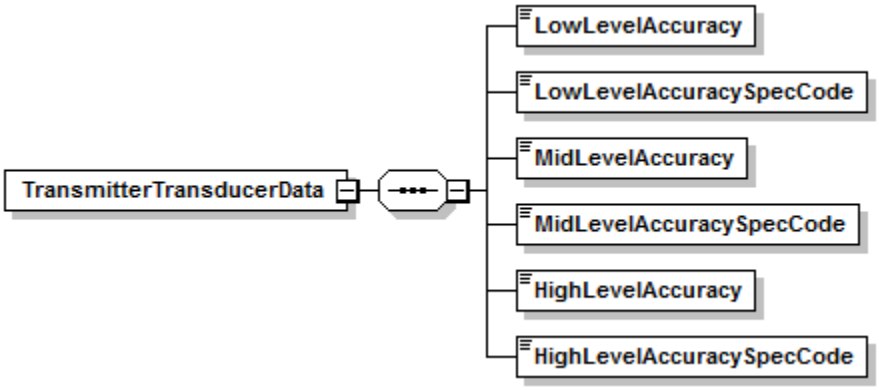

Transmitter Transducer Data XML Elements

Low Level Accuracy *(LowLevelAccuracy)*
Report one of the following: (1) the highest accuracy percentage for any of the three transmitters, obtained using Equation D-1a of Appendix D; (2) the total fuel flowmeter accuracy percentage, as determined using AGA Report No. 3 Uncertainty Guidelines; or (3) the sum of the percent accuracies of the three transmitters. Round to one decimal place.

Low Level Accuracy Spec Code *(LowLevelAccuracySpecCode)*
Report the method used to determine accuracy results for this level using one of the codes from Table 36.

Table 36: Accuracy Spec Codes and Descriptions

Code	Description
ACT	Actual Highest Accuracy Percentage for Individual Transmitter or Transducer at This Level (must be ≤ 1.0 percent of full scale to pass)
AGA3	Total Flowmeter Accuracy from AGA Report No. 3 Uncertainty Guidelines (must be ≤ 2.0 percent of upper range value to pass)
SUM	Sum of the Percentage Accuracies of All Transmitters or Transducers at This Level (must be ≤ 4.0 percent to pass)

Mid Level Accuracy *(MidLevelAccuracy)*
Report one of the following: (1) the highest percentage accuracy of any of the three transmitters, obtained using Equation D-1a of Appendix D; (2) the sum of the accuracy percentages of the three transmitters; or (3) the total fuel flowmeter accuracy percentage, as determined using AGA Report No. 3 Uncertainty Guidelines. If accuracy testing is done at two or more mid-level points, then, for Option 1, report the highest individual accuracy percentage value from all of the mid-level tests of all three transmitters. If Option 2 is used, first determine the highest accuracy

percentage for each of the three transmitters at all mid-level points tested. Then, take the sum of these three highest accuracy percentages. Round to one decimal place.

Mid Level Accuracy Spec Code *(MidLevelAccuracySpecCode)*
Report the method used to determine accuracy results for this level using one of the codes from Table 35.

High Level Accuracy *(HighLevelAccuracy)*
Report one of the following: (1) the highest percentage accuracy for any of the three transmitters, obtained using Equation D-1a of Appendix D; (2) the sum of the accuracy percentages of the three transmitters; or (3) the total fuel flowmeter accuracy percentage, as determined using AGA Report No. 3 Uncertainty Guidelines. Round to one decimal place.

High Level Accuracy Spec Code *(HighLevelAccuracySpecCode)*
Report the method used to determine accuracy results for this level using one of the codes from Table 35.

3.4 Fuel Flow-To-Load Baseline

Fuel Flow-to-Load Baseline Overview

If you elect to use the optional fuel flow-to-load ratio test provisions of Section 2.1.7 of Appendix D to Part 75 to extend the deadline for required fuel flowmeter accuracy tests, report a TEST SUMMARY DATA record and its corresponding FUEL FLOW-TO-LOAD BASELINE DATA record for each fuel flowmeter system that will be quality-assured using fuel flow-to-load ratio or gross heat rate (GHR) methodology, upon completion of the baseline data collection. According to the provisions of Section 2.1.7.1, the baseline fuel flow-to-load ratio or GHR must be supported by at least 168 hours of baseline fuel flow-to-load ratio or gross heat rate (GHR) data.

Fuel Flow-to-Load Baseline XML Model

Figure 42: Fuel Flow-to-Load Baseline XML Structure

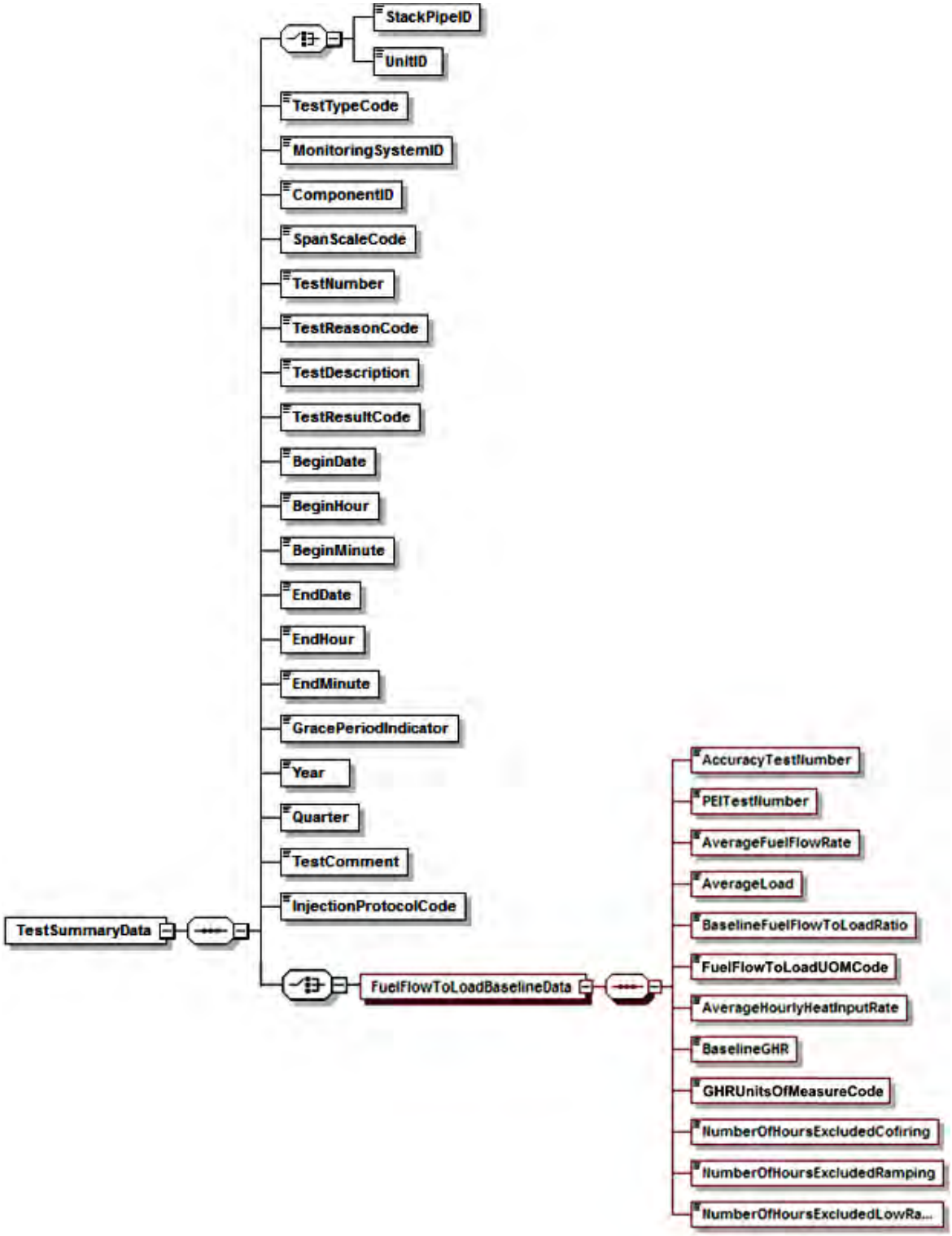

Specific Considerations

Reporting Baseline Data

- For orifice, nozzle, and venturi fuel flowmeters relying on conformance with AGA Report No. 3 for certification and QA, baseline data collection begins immediately after completing the full quality assurance sequence (i.e., flowmeter transmitter/transducer calibration test and primary element inspection (PEI)). The transmitter calibrations and PEI must either be completed in the same calendar quarter or in the adjacent quarters.
- For flowmeters that do not require a PEI, if the calibration occurs on-site, baseline data collection begins immediately after completing the accuracy test. If the calibration occurs off-site, baseline data collection begins immediately after the flowmeter is reinstalled.
- The baseline data must be generated within four calendar quarters.
- For common pipe configurations, a single baseline fuel flow-to-load ratio or GHR is derived from the average common pipe fuel flow rate and the hourly loads for all units that received fuel from the common pipe. Thus, report only one FUEL FLOW-TO-LOAD BASELINE DATA record for the common pipe (see Part 75, Appendix D, Section 2.1.7.1(b)).
- For units that co-fire fuels as the principal mode of operation, use the GHR methodology and derive the baseline data during co-fired hours (see Part 75, Appendix D, Section 2.1.7.1(e)). Report a TEST SUMMARY DATA record for each fuel flowmeter system that supplies fuel to the unit during co-fired hours. In the associated FUEL FLOW-TO-LOAD BASELINE DATA records for these systems, report the identical co-fired baseline information.

3.4.1 Test Summary Data Elements for Fuel Flow-to-Load Baseline

Unit ID or Stack Pipe ID *(UnitID or StackPipeID)*
Report the Unit ID or Stack Pipe ID that corresponds to the test location.

Test Type Code *(TestTypeCode)*
Report the test type code as "FF2LBAS."

Monitoring System ID *(MonitoringSystemID)*
Report the fuel flowmeter System ID.

Component ID *(ComponentID)*
Leave this field blank. It does not apply to FUEL FLOW-TO-LOAD BASELINE DATA.

Span Scale Code *(SpanScaleCode)*
Leave this field blank. It does not apply to FUEL FLOW-TO-LOAD BASELINE DATA.

Test Number *(TestNumber)*
At each monitoring location and for each test type, report a unique test number for each set of records which comprises a single test. The test number may not be reused at this location for another set of FUEL FLOW-TO-LOAD BASELINE DATA.

Test Reason Code *(TestReasonCode)*
Leave this field blank. It does not apply to FUEL FLOW-TO-LOAD BASELINE DATA.

Test Description *(TestDescription)*
Leave this field blank. It does not apply to FUEL FLOW-TO-LOAD BASELINE DATA.

Test Result Code *(TestResultCode)*
Leave this field blank. It does not apply to Fuel Flow-To-Load Baseline Data.

Begin Date *(BeginDate)*
Report the date when the FUEL FLOW-TO-LOAD BASELINE DATA collection was begun. This will be immediately after the completion of the fuel flowmeter accuracy test(s) (for on-site accuracy tests) or immediately after the flowmeter is reinstalled (for off-site calibrations).

Begin Hour *(BeginHour)*
Report the hour when the FUEL FLOW-TO-LOAD BASELINE DATA collection was begun.

Begin Minute *(BeginMinute)*
Leave this field blank. It does not apply to FUEL FLOW-TO-LOAD BASELINE DATA.

End Date *(EndDate)*
Report the date when the FUEL FLOW-TO-LOAD BASELINE DATA collection was completed.

End Hour *(EndHour)*
Report the hour when the FUEL FLOW-TO-LOAD BASELINE DATA collection was completed.

End Minute *(EndMinute)*
Leave this field blank. It does not apply to FUEL FLOW-TO-LOAD BASELINE DATA.

Grace Period Indicator *(GracePeriodIndicator)*
Leave this field blank. It does not apply to FUEL FLOW-TO-LOAD BASELINE DATA.

Year *(Year)*
Leave this field blank. It does not apply to FUEL FLOW-TO-LOAD BASELINE DATA.

Quarter *(Quarter)*
Leave this field blank. It does not apply to FUEL FLOW-TO-LOAD BASELINE DATA.

Test Comment *(TestComment)*
Report a comment regarding the FUEL FLOW-TO-LOAD BASELINE DATA if desired.

Injection Protocol Code *(InjectionProtocolCode)*
Leave this field blank. It does not apply to FUEL FLOW-TO-LOAD BASELINE DATA.

3.4.2 Fuel Flow-to-Load Baseline Data

Fuel Flow-to-Load Baseline Data XML Model

Figure 43: *Fuel Flow-to-Load Baseline Data* XML Elements

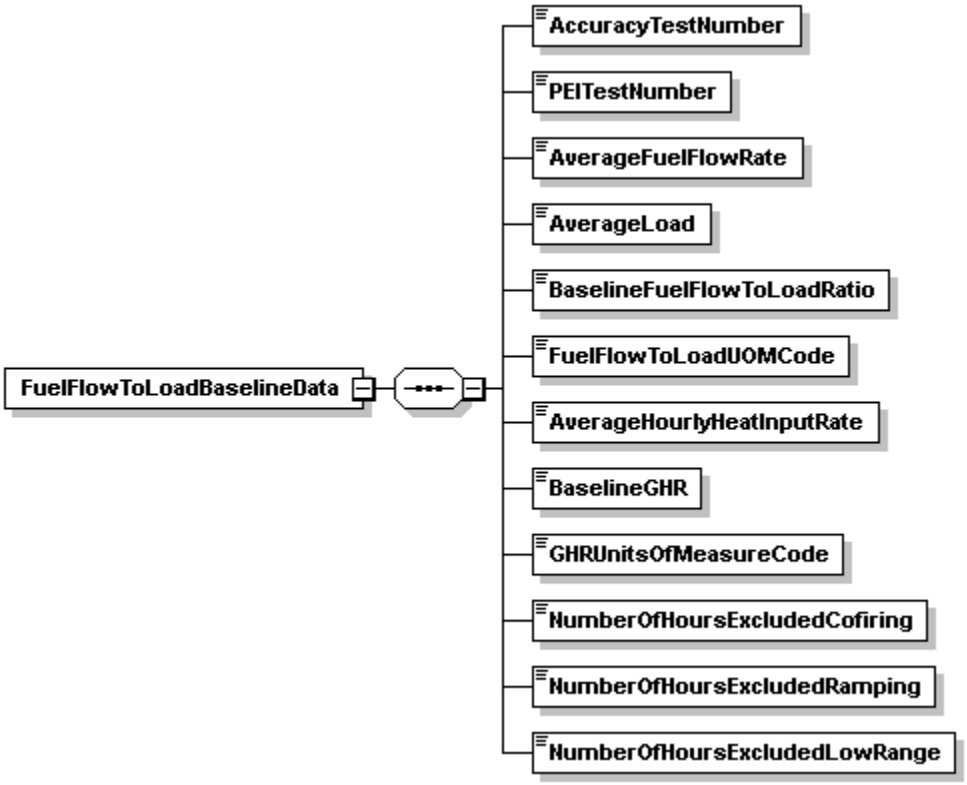

Fuel Flow-to-Load Baseline Data XML Elements

Accuracy Test Number *(AccuracyTestNumber)*
For orifice, nozzle, and venturi fuel flowmeters required to perform a transmitter accuracy test as periodic quality assurance (under Section 2.1.6 of Appendix D), report the test number of the most recent transmitter accuracy test (according to Sections 2.1.6.1 through 2.1.6.5 of Appendix D). For all other fuel flowmeters, report the test number of the most recent flowmeter system accuracy test (according to Section 2.1.5.1 or 2.1.5.2 of Appendix D).

Primary Element Inspection (PEI) Test Number *(PEITestNumber)*
For orifice, nozzle, or venturi fuel flowmeters required to perform a visual inspection of the primary element as periodic quality assurance (under Section 2.1.6.4 of Appendix D), report the test number of the most recent primary element inspection. For all other types of fuel flowmeters, leave this field blank.

Average Fuel Flow Rate *(AverageFuelFlowRate)*
Report the hourly average fuel flow rate during unit operation measured by the fuel flowmeter system during the baseline period (i.e., Q_{base} from Equation D-1b in Section 2.1.7.1 of Appendix D). If you elect to use the gross heat rate (GHR) option and report the average hourly heat input rate, leave this field as blank.

For a system with more than one fuel flowmeter, you must determine the net hourly fuel flow rate for each hour in the baseline data collection period. The net fuel flow rate may represent the difference between the values measured for the main supply and recirculating fuel lines, or may represent the sum of fuel flow for two or more fuel flowmeters measuring the same type of fuel to the unit. For a combined cycle turbine with auxiliary firing (e.g., a duct burner), if the duct burner operates infrequently (i.e., < 25 percent of the unit operating hours, on average), you may establish the baseline for the fuel flowmeter system using the hours when only the combustion turbine is in operation. Add together all of the net hourly fuel flow rates and divide by the number of hours in the baseline data collection period to obtain Q_{base}.

Average Load *(AverageLoad)*
Report the average unit load during the baseline period (i.e., L_{avg} from Equation D-1c in Section 2.1.7.1 of Appendix D). For a common pipe, add together all of the hourly operating loads for all units that received fuel through the common pipe header during the baseline data collection period. Divide the result by the number of hours in the baseline data collection period to obtain L_{avg}. For a combined cycle turbine with auxiliary firing, if the duct burner operates infrequently (< 25 percent of the unit operating hours, on average) and you may establish the baseline using hours when only the turbine is in operation, use the corresponding hourly electrical outputs from the turbine to determine L_{avg}.

Baseline Fuel Flow-to-Load Ratio *(BaselineFuelFlowToLoadRatio)*
Report the baseline fuel flow-to-load ratio calculated as R_{base} from Equation D-1b in Section 2.1.7.1 of Appendix D. If you report the Baseline GHR, you may leave this field blank.

Fuel Flow-to-Load Units of Measure (UOM) Code *(FuelFlowToLoadUOMCode)*
Report the code for the units of measure of the baseline fuel-flow-to-load ratio as shown in Table 37. If the Baseline Fuel Flow-to-load Ratio data element is blank, leave this field blank.

Table 37: Base Fuel Flow-to-Load Units of Measure Codes and Descriptions

Applicability	Code	Description
Gas Combustion	1	100 scfh/MWe
	2	100 scfh/klb per hour of steam load
	7	100 scfh/mmBtu per hour of steam load
Oil Combustion	3	(lb/hr)/MWe
	4	(lb/hr)/klb per hour steam load
	8	(lb/hr)/mmBtu per hour of steam load
Subpart H units not subject to either the Acid Rain Program or the CASPR SO_2 Program, and using volumetric oil flowmeters	5	(gal/hr)/MWe
	6	(gal/hr)/klb per hour of steam load
	9	(gal/hr)/mmBtu per hour of steam load

Average Hourly Heat Input Rate *(AverageHourlyHeatInputRate)*
Report the average heat input rate for the baseline hours in mmBtu/hr. If you report the Average Fuel Flow Rate, you may leave this field blank.

Baseline Gross Heat Rate (GHR) *(BaselineGHR)*
Report the baseline value of the gross heat rate calculated as $(GHR)_{base}$ from Equation D-1C in Section 2.1.7.1 of Appendix D. If you provide the baseline fuel flow-to-load ratio, you may leave this field blank.

GHR Units of Measure Code *(GHRUnitsOfMeasureCode)*
Report the code for the units of the baseline GHR as shown in Table 38. If the Baseline GHR data element is blank also leave this field blank.

Table 38: Baseline GHR Units of Measure Codes and Descriptions

Code	Description
BTUKWH	Btu/kwh
BTULB	Btu/lb of steam load
BTUKBTU	mmBtu per mmBtu of steam load times 1000

Number of Hours Excluded Co-firing *(NumberOfHoursExcludedCofiring)*
If single-fuel combustion is the principal mode of operation, report the number of hours (if any) of fuel flow rate data excluded from the fuel flow-to-load or GHR analysis because the unit was co-firing different fuels. If co-firing is the principal mode of operation, report the number of single-fuel hours (if any) excluded from the data analysis. Leave this field as blank or zero if you are not claiming any excluded hours for this reason.

Number of Hours Excluded Ramping *(NumberOfHoursExcludedRamping)*
Report the number of hours from the baseline period that are excluded from the baseline data because they met the criteria of ramping hours in Section 2.1.7.1 of Appendix D. Leave this field as blank or zero if you are not claiming any excluded hours for this reason.

Number of Hours Excluded Low Range *(NumberOfHoursExcludedLowRange)*
Report the number of hours from the baseline period that were excluded from the baseline data because the unit load during the hour was in the lower 25.0 percent of the range of operation and was not considered normal. Leave this field as blank or zero if you are not claiming any excluded hours for this reason.

3.5 Fuel Flow-to-Load Test

Fuel Flow-to-Load Overview

For units using the optional fuel flowmeter quality assurance provisions of Section 2.1.7 of Appendix D to Part 75 (i.e., the fuel flow-to-load ratio or GHR test) to extend the deadline for fuel flowmeter accuracy and transmitter/transducer tests, you may extend the QA deadline by one quarter by reporting one fuel flow-to-load test per fuel flowmeter system. Report the flow-to-load test results in a TEST SUMMARY DATA record and the details of the flow-to-load analysis in an associated FUEL FLOW-TO-LOAD TEST record.

Report this test every operating quarter, starting with either:

- The first operating quarter following the quarter in which all the required fuel flowmeter accuracy tests, transmitter/transducer accuracy tests, and primary element inspections are completed for flowmeters that are calibrated on-site; or
- The first operating quarter following the quarter that the flowmeter was reinstalled for flowmeters that are calibrated off-site.

If baseline data collection is still in progress at the end of the quarter, report a test result of "INPROG" in the TEST SUMMARY record and do not report a FUEL FLOW-TO-LOAD TEST record.

Fuel Flow-to-Load XML Model

Figure 44: Fuel Flow-to-Load Test XML Structure

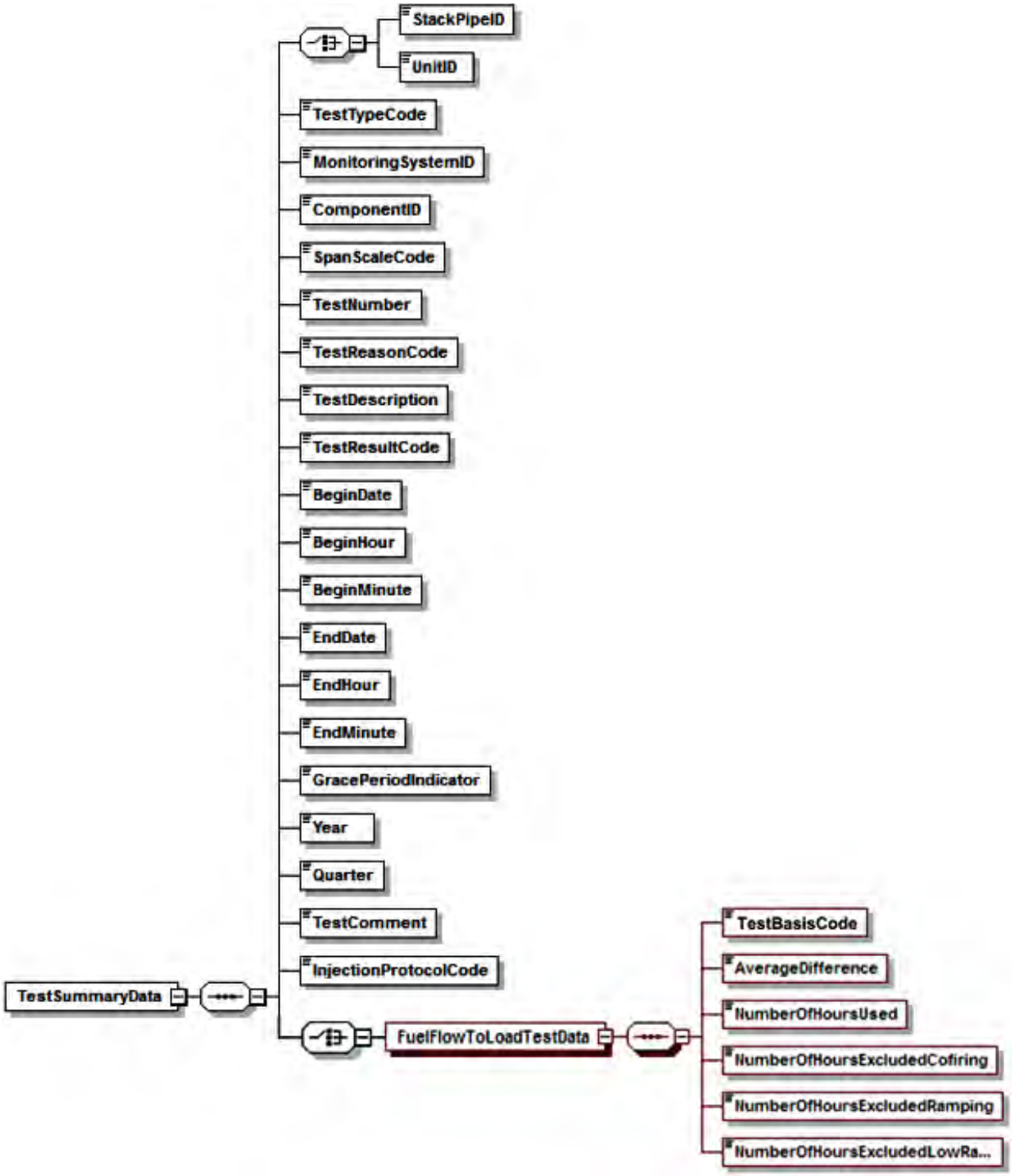

Specific Considerations

Submitting for a Combined-Cycle Combustion Turbine (CT)

- For a combined-cycle combustion turbine (CT) with a duct burner, if the fuel flowmeters serving the CT and the duct burner are represented as components of a single fuel flowmeter monitoring system, the fuel flow-to-load ratio test may be performed using only the turbine fuel flow rate and load, provided that the duct burner is used, on average, for ≤ 25 percent of the unit operating hours.
- For units that co-fire fuels as the principal mode of operation, use the GHR methodology and use only co-fired hours in the data analysis (see Part 75, Appendix D, Section 2.1.7.2(d)(2)). Report a TEST SUMMARY DATA record for each fuel flowmeter system that supplies fuel to the unit during co-fired hours. In the associated FUEL FLOW-TO-LOAD TEST records for these systems, report the identical information from the co-fired data analysis.

Reporting Frequency

- Do not report this record for non-operating quarters (i.e., quarters with zero operating hours).
- For ozone season only reporters, fuel flow-to-load ratio tests are required only during the ozone season. Therefore, for such units or pipes, report a FUEL FLOW-TO-LOAD TEST DATA record only for the second and third calendar quarters, if those quarters are operating quarters (see §75.74(c)(3)(v)).

3.5.1 Test Summary Data Elements for Fuel-Flow-to-Load Test

Unit ID or Stack Pipe ID *(UnitID or StackPipeID)*
Report the Unit ID or Stack Pipe ID that corresponds to the test location.

Test Type Code *(TestTypeCode)*
Report the test type code as "FF2LTST."

Monitoring System ID *(MonitoringSystemID)*
Report the three-character Monitoring System ID assigned to the fuel flowmeter system.

Component ID *(ComponentID)*
Leave this field blank. It does not apply to fuel flow-to-load tests.

Span Scale Code *(SpanScaleCode)*
Leave this field blank. It does not apply to fuel flow-to-load tests.

Test Number *(TestNumber)*
At each monitoring location and for each test type, report a unique test number for each set of records which comprises a single test. One method of tracking unique test numbers for this type of test is to use the System ID as a prefix to the number. The test number may not be reused at this location for another fuel flow-to-load test.

Test Reason Code *(TestReasonCode)*
In all cases, report "QA" as the purpose of the test.

Test Description *(TestDescription)*
Leave this field blank. It does not apply to fuel flow-to-load tests.

Test Result Code *(TestResultCode)*
Report the appropriate code from Table 39 below to indicate the result of the test.

Table 39: Fuel Flow-to-Load Test Result Codes and Descriptions

Code	Description
EXC168H	Fewer than 168 hours available to analyze after taking allowable data exclusions
FAILED	Test was failed
FEW168H	Fewer than 168 fuel operating hours (i.e., not a fuel flowmeter QA operating quarter)
INPROG	Baseline data collection in progress at the end of the quarter
PASSED	Test was passed

Begin Date *(BeginDate)*
Leave this field blank. It does not apply to fuel flow-to-load tests.

Begin Hour *(BeginHour)*
Leave this field blank. It does not apply to fuel flow-to-load tests.

Begin Minute *(BeginMinute)*
Leave this field blank. It does not apply to fuel flow-to-load tests.

End Date *(EndDate)*
Leave this field blank. It does not apply to fuel flow-to-load tests.

End Hour *(EndHour)*
Leave this field blank. It does not apply to fuel flow-to-load tests.

End Minute *(EndMinute)*
Leave this field blank. It does not apply to fuel flow-to-load tests.

Grace Period Indicator *(GracePeriodIndicator)*
Leave this field blank. It does not apply to fuel flow-to-load tests.

Year *(Year)*
Report the year (YYYY) of the calendar quarter of data that is being quality-assured.

Quarter *(Quarter)*
Report the calendar quarter (Q) of the calendar quarter of the data that is being quality-assured.

Test Comment *(TestComment)*
Report a comment regarding the test if desired.

Injection Protocol Code *(InjectionProtocolCode)*
Leave this field blank. It does not apply to fuel flow-to-load tests.

3.5.2 Fuel Flow-to-Load Test Data

Fuel Flow-to-Load Test Data XML Model

Figure 45: *Fuel Flow-to-Load Test Data* XML Elements

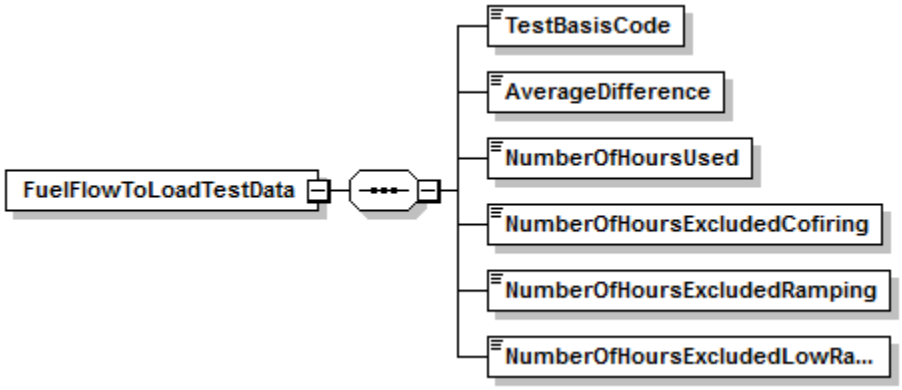

Fuel Flow-To-Load Test Data XML Elements

Test Basis Code *(TestBasisCode)*
Report a "Q" if the quarterly analysis compares the hourly fuel flow-to-load ratios (using Equation D-1e in Section 2.1.7.2 of Appendix D). Report an "H" if the quarterly analysis compares the hourly gross heat rates (using Equation D-1f in Section 2.1.7.2 of Appendix D).

Leave this field blank if reporting a Test Result Code of "EXC168H" or "FEW168H" in the TEST SUMMARY DATA record.

Average Difference *(AverageDifference)*
Perform the quarterly analysis according to the provisions of Section 2.1.7.2 of Appendix D. If 168 hours of data are available, calculate and report the value of E_f using Equation D-1g.

In the quarter in which the baseline data collection is completed, there must be at least 168 hours of data subsequent to completing baseline data collection in order to perform a fuel flow-to-load or GHR test for that quarter.

Leave this field blank if reporting a Test Result Code of "EXC168H" or "FEW168H" in the TEST SUMMARY DATA record.

Number of Hours Used *(NumberOfHoursUsed)*
Report the number of hours of quality-assured fuel flow rate data that were used for the fuel flow-to-load or GHR evaluation of the fuel flowmeter system. A minimum of 168 hours of quality-assured fuel flow rate data are required for the analysis.

Leave this field blank if reporting a Test Result Code of "EXC168H" in the TEST SUMMARY DATA record.

Number of Hours Excluded Co-firing *(NumberOfHoursExcludedCofiring)*
Report the number of hours (if any) of fuel flow rate data excluded from the fuel flow-to-load or GHR analysis because the unit was co-firing different fuels, if single-fuel combustion is the principal mode of operation. Report the number of single-fuel hours (if any) excluded from the data analysis, if co-firing is the principal mode of operation.

Leave this field as blank if not claiming any excluded hours for this reason.

Number of Hours Excluded Ramping *(NumberOfHoursExcludedRamping)*
Report the number of hours (if any) of fuel flow rate data excluded from the data analysis because of ramping (i.e., the hourly load differed by more than +/- 15 percent from the load during either the hour before or the hour after).

Leave this field as blank if not claiming any excluded hours for this reason.

Number of Hours Excluded Low Range *(NumberOfHoursExcludedLowRange)*
Report the number of hours (if any) of fuel flow rate data excluded from the data analysis because the unit load was in the lower 25.0 percent of the range of operation (from minimum safe, stable load to maximum sustainable load, as indicated in the MONITORING LOAD DATA record in the monitoring plan). This exclusion is not allowed if operation in this lower portion of the range is considered normal for the unit.

Leave this field as blank if not claiming any excluded hours for this reason.

3.6 Unit Default Test (LME)

Unit Default Test Overview

To establish a unit-specific, fuel-specific NO_X emission rate for qualifying low mass emissions (LME) units under the Acid Rain Program or Subpart H, perform Appendix E testing at each of the required load levels, as described in §75.19 (c)(1)(iv)(A), (I) and (J). Report fuel-and-unit specific NO_X emission rate tests using a TEST SUMMARY DATA record, a UNIT DEFAULT TEST DATA record, and UNIT DEFAULT TEST RUN DATA records for each run at each operating level of the test. Indicate each test run used to calculate the highest three-run average NO_X emission rate, by reporting "0" for "no" or "1" for "yes" in the Run Used Flag data element of the appropriate UNIT DEFAULT TEST RUN DATA records. Report only three records with this indicator; for all other records leave this field blank.

Unit Default Test XML Model

Figure 46: Unit Default Test XML Structure

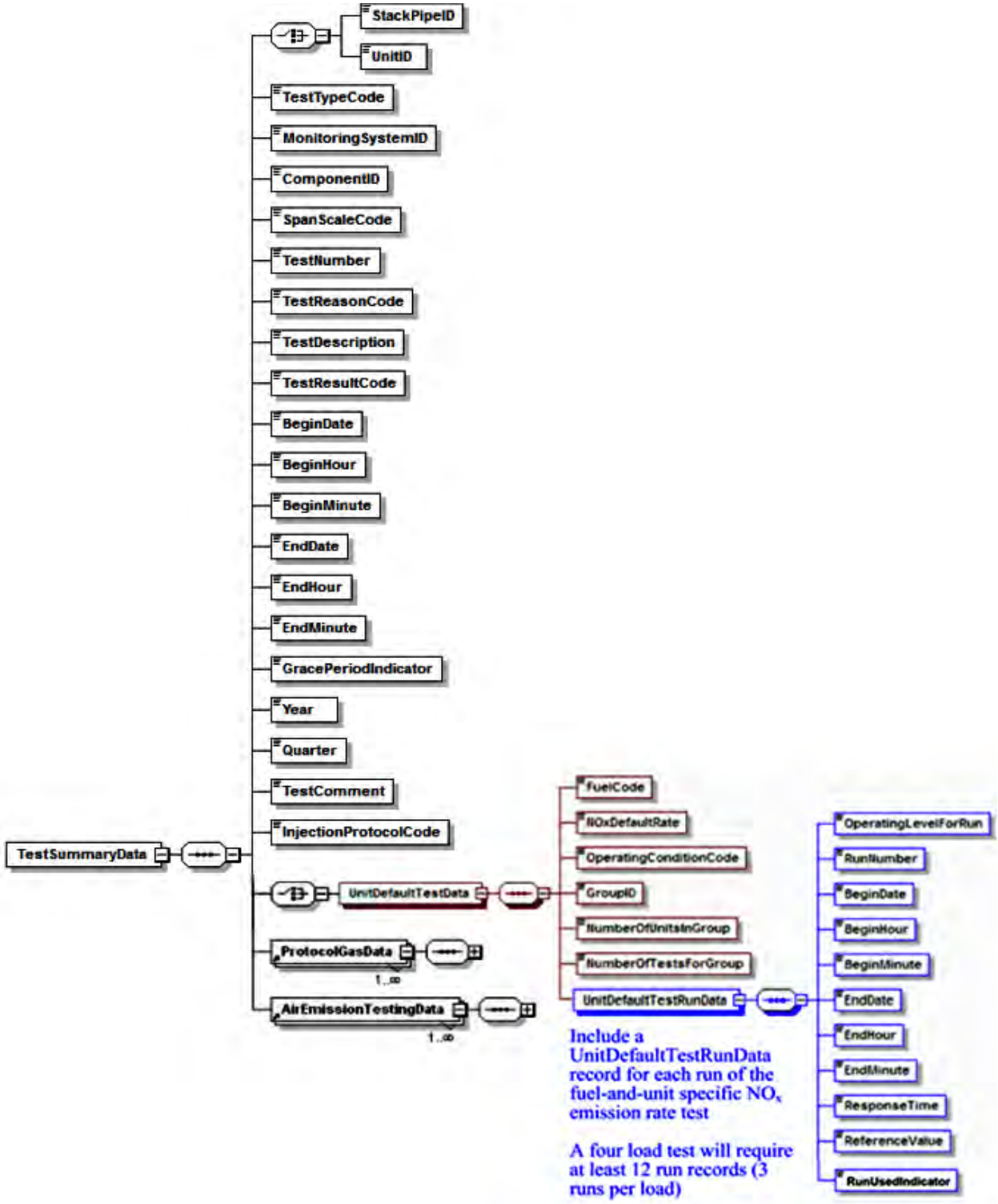

Specific Considerations

Aborted or Invalid Tests

If a test is aborted or if certain test runs are discarded as invalid, keep a record of this in the test log, but do not report partial tests or invalid runs in the UNIT DEFAULT TEST RUN DATA record. The only acceptable reasons for aborting a test or discarding test runs are: (1) the reference test method was not used properly or malfunctioned; or (2) a problem with the unit or process prevented the test from being done at the load level or conditions specified in the regulation.

3.6.1 Test Summary Data Elements for LME Unit Default Test

Unit ID or Stack Pipe ID *(UnitID or StackPipeID)*
Report the Unit ID that corresponds to the test location.

Test Type Code *(TestTypeCode)*
Report the test type code as "UNITDEF."

Monitoring System ID *(MonitoringSystemID)*
Leave this field blank. It does not apply to LME unit default tests.

Component ID *(ComponentID)*
Leave this field blank. It does not apply to LME unit default tests.

Span Scale Code *(SpanScaleCode)*
Leave this field blank. It does not apply to LME unit default tests.

Test Number *(TestNumber)*
At each monitoring location and for each test type, report a unique test number for each set of records which comprises a single test. The test number may not be reused at this location for another LME unit default test.

Test Reason Code *(TestReasonCode)*
Report the purpose of the test using the appropriate code from Table 40.

Table 40: LME Unit Default Test Reason Codes and Descriptions

Code	Description
INITIAL	Initial Unit Default Test
QA	Periodic Quality Assurance (every five years)
RECERT	Retest due to event reported in the QA Certification Event record

Test Description *(TestDescription)*
Leave this field blank. It does not apply to LME unit default tests.

Test Result Code *(TestResultCode)*
Leave this field blank. It does not apply to LME unit default tests.

Begin Date *(BeginDate)*
Report the begin date of the first run of the test.

Begin Hour *(BeginHour)*
Report the begin hour of the first run of the test.

Begin Minute *(BeginMinute)*
Report the begin minute of the first run of the test.

End Date *(EndDate)*
Report the end date of the last run of the test.

End Hour *(EndHour)*
Report the end hour of the last run of the test.

End Minute *(EndMinute)*
Report the end minute of the last run of the test.

Grace Period Indicator *(GracePeriodIndicator)*
Leave this field blank. It does not apply to LME unit default tests.

Year *(Year)*
Leave this field blank. It does not apply to LME unit default tests.

Quarter *(Quarter)*
Leave this field blank. It does not apply to LME unit default tests.

Test Comment *(TestComment)*
Report any comments regarding the test. Additionally, for tests conducted after January 1, 2009, EPA encourages use of this field to report the name of the stack testing company, the lead tester, and whether testing was conducted in accordance with ASTM D7036.

Injection Protocol Code *(InjectionProtocolCode)*
Leave this field blank. It does not apply to LME unit default tests.

3.6.2 Unit Default Test Data

Unit Default Test Data XML Model

Figure 47: *Unit Default Test Data* XML Elements

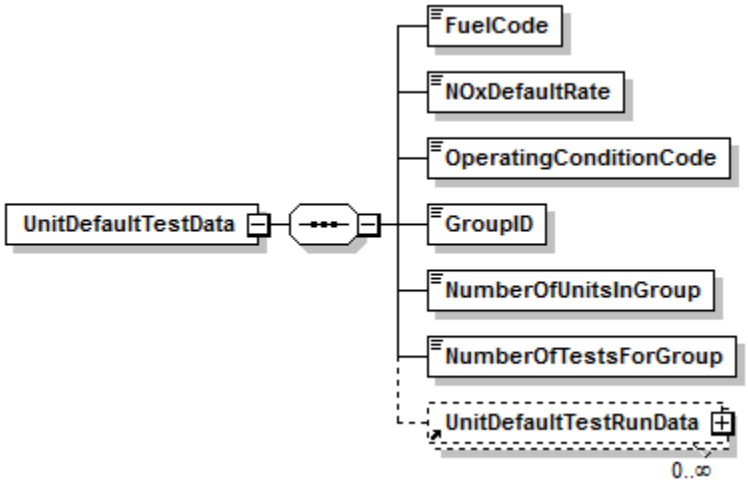

Unit Default Test Data XML Elements

Fuel Code *(FuelCode)*
Report the type of fuel combusted during this unit default test using the appropriate uppercase code as shown in Table 41.

Table 41: Fuel Codes and Descriptions for Unit Default Tests

Code	Description
BFG	Blast Furnace Gas
BUT	Butane Gas
CDG	Coal-Derived Gas
COG	Coke Oven Gas
DGG	Digester Gas
DSL	Diesel Oil
LFG	Landfill Gas
LPG	Liquefied Petroleum Gas (if measured as a gas)
MIX	Mixture (co-fired fuels)
NNG	Other Natural Gas (not PNG quality)
OGS	Other Gas
OIL	Residual Oil
OOL	Other Oil
PDG	Producer Gas

Code	Description
PNG	Pipeline Natural Gas (as defined in §72.2)
PRG	Process Gas
PRP	Propane Gas
RFG	Refinery Gas
SRG	Unrefined Sour Gas

NO_X Default Rate *(NOXDefaultRate)*
Report the default NO_X emission rate for the LME unit as the highest three-run average obtained at any tested load.

Operating Condition Code *(OperatingConditionCode)*
For units using separate base and peak load NO_X default rates (see §75.19(c)(1)(iv)(C)(9)), report the code from Table 42 indicating whether the test was performed at base load or peak load and, if at base load, whether an additional test was performed at peak load. Leave this field blank if not reporting separate base and peak load NO_X default rates.

Table 42: Unit Default Test Operating Condition Codes and Descriptions

Code	Description
A	This test was performed at base load and the resulting NO_X default rate will be multiplied by 1.15 to determine the NO_X default rate for peak hours
B	This test was performed at base load and an additional test was performed at peak load
P	This test was performed at peak load

Group ID *(GroupID)*
If this test was performed for application to a group of identical units, use the same group ID as reported in the MONITORING DEFAULT DATA record in this field. Otherwise, leave this field blank. For details on assigning a Group ID, reference the MONITORING DEFAULT DATA record in the Monitoring Plan instructions.

Number of Units in Group *(NumberOfUnitsInGroup)*
If this test was performed to be applied to a group of identical units, report the number of units in the group. Otherwise, leave this field blank.

Number of Tests for Group *(NumberOfTestsForGroup)*
If this test was performed to be applied to a group of identical units, report the number of tests performed for the group. Otherwise, leave this field blank.

3.6.3 Unit Default Test Run Data

Unit Default Test Run Data XML Model

Figure 48: *Unit Default Test Run Data* XML Elements

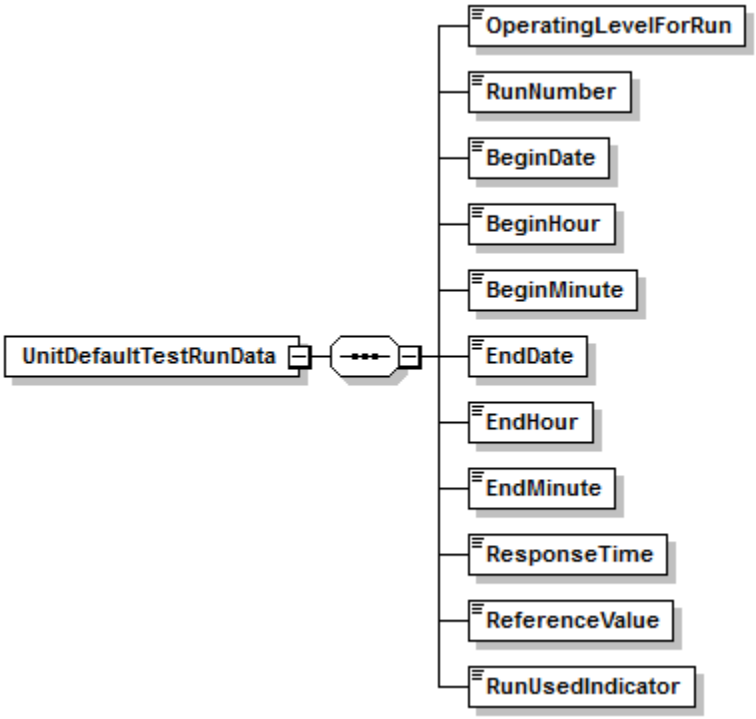

Unit Default Test Run Data XML Elements

Operating Level for Run *(OperatingLevelForRun)*
Report the operating level for the Unit Default Test run, using “1” as the lowest level.

Run Number *(RunNumber)*
Assign a run number to each run. You may assign run numbers either consecutively for each test (e.g., for a four-load test you may use run numbers one through twelve to represent the three runs at the four load levels) or for each load level within the test (i.e., one through three for the runs at each load level). At a minimum, runs must be numbered consecutively in time order within a load level. Within a load level, do not skip or repeat a run number.

Begin Date *(BeginDate)*
Report the date on which the run began.

Begin Hour *(BeginHour)*
Report the hour in which the run began.

Begin Minute *(BeginMinute)*
Report the minute in which the run began.

End Date *(EndDate)*
Report the date on which the run ended.

End Hour *(EndHour)*
Report the hour in which the run ended.

End Minute *(EndMinute)*
Report the minute in which the run ended.

Response Time *(ResponseTime)*
Report the response time in seconds according to Sections 8.2.5 and 8.2.6 of Method 7E in Appendix A-4 to Part 6. This value is used to determine the sampling time at each point.

Reference Value *(ReferenceValue)*
Report the reference method value for the run in NO_X pounds per mmBtu, rounded to three decimal places.

Run Used Indicator *(RunUsedIndicator)*
Identify and flag the three runs that are used to determine the highest three-run average NO_X emission rate at any tested load level by reporting “0” for “no” or “1” for “yes” in this field. Flag only these three runs. Leave this field blank for all other test runs.

3.6.4 Unit Default Protocol Gas Data

Unit Default *Protocol Gas Data* Overview

For LME fuel or unit default tests conducted using Method 6C, 7E, or 3A report one record for each cylinder used to determine analyzer calibration error, drift, and system bias. A minimum of three records should be reported, one for each gas level (High, Mid, and Low).

Unit Default *Protocol Gas Data* XML Model

Figure 49: Unit Default *Protocol Gas Data* XML Elements

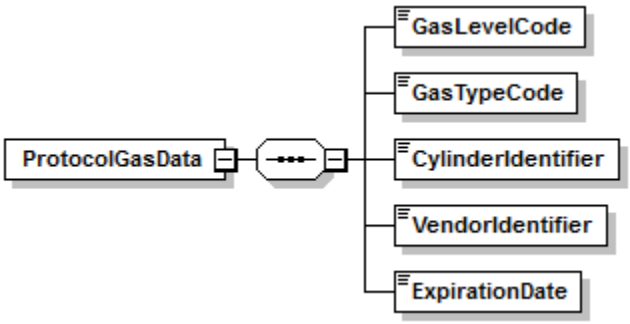

Unit Default *Protocol Gas Data* XML Elements

Gas Level Code *(GasLevelCode)*
Report a calibration gas level code of HIGH, MID, or LOW to indicate the concentration of the gas in the cylinder. The definition of a high-level, mid-level, and low-level calibration gas can be found in the Part 75 performance specifications for linearity checks and in EPA Reference Method 7E for RATAs.

Gas Type Code *(GasTypeCode)*
Report one or more of the gas type codes in Table 9 of Section 2.3.4 to indicate the type(s) of gas(es) in the cylinder.

Note: If you use a blend of EPA Protocol gases that is not present in this table, you may report a value of "APPVD," but you will need to contact EPA before submitting the data in order to get permission to use this code.

Cylinder Identifier *(CylinderIdentifier)*
Report the vendor-assigned identification or serial number found on the cylinder. Use only capitalized alphanumeric characters, hyphens, periods, or ampersands. In order to import a file with an ampersand successfully, the ampersand will need to be escaped within the XML. For example, to report the Cylinder ID <AB01234567&>, the XML would read <AB01234567&>.

For purified air material, leave this field blank.

Vendor Identifier *(VendorIdentifier)*

For an EPA Protocol gas, report the EPA-assigned PGVP Vendor ID of the production site that supplied the cylinder. PGVP Vendor IDs are year specific, therefore report the assigned PGVP Vendor ID that is applicable on the date the cylinder is certified. An up-to-date list of PGVP Vendor IDs will be located on the EPA website, and can be accessed via the ECMPS Support website.

Leave this field blank if the Gas Type Code is ZERO, AIR, SRM, NTRM, GMIS, RGM, or PRM.

Expiration Date *(ExpirationDate)*
For an EPA Protocol gas, SRM, NTRM, GMIS, RGM, or PRM, report the cylinder's expiration date.

Leave this field blank if the Gas Type Code is AIR or ZERO.

Specific Considerations

- You must report a PROTOCOL GAS DATA record when using standard reference material, NIST-traceable reference material, gas manufacturer's intermediate standard, research gas mixture, or SRM-equivalent compressed gas primary reference material in place of an EPA Protocol gas. Report all data elements in this record except the PGVP Vendor ID and the Expiration Date of the cylinder.
- You must report a PROTOCOL GAS DATA record when using purified air material as the high-level O_2 gas. Do not report the Cylinder ID, PGVP Vendor ID, and the Expiration Date of the cylinder.
- For tests conducted using EPA Reference Method 3A, 6C, or 7E, report Gas Type Code "ZERO" if a zero gas is used as the low level calibration gas of the reference analyzer. Do not report the Cylinder ID, PGVP Vendor ID, and the Expiration Date of the cylinder.

3.6.5 Unit Default Air Emission Testing Data

Unit Default *Air Emission Testing Data* Overview

Report at least one AIR EMISSION TESTING DATA record for each LME Unit Default Test. One record should be reported for each on-site Qualified Individual from an Air Emission Testing Body who conducted or oversaw the test. The Qualified Individual must be qualified for the methods employed in the test.

Unit Default *Air Emission Testing Data* XML Model

Figure 50: Unit Default *Air Emission Testing Data* XML Elements

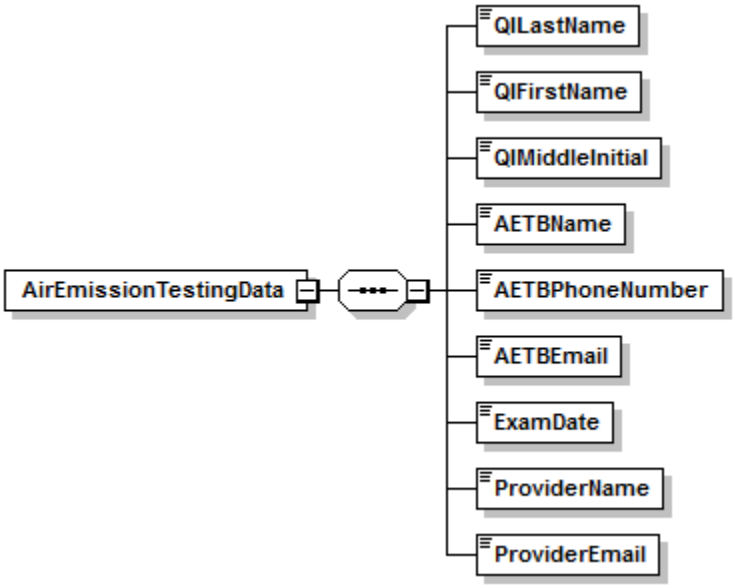

Unit Default *Air Emission Testing Data* XML Elements

QI Last Name *(QILastName)*
Report the last name of the on-site Qualified Individual who conducted or oversaw the test.

QI First Name *(QIFirstName)*
Report the first name of the on-site Qualified Individual who conducted or oversaw the test.

QI Middle Initial *(QIMiddleInitial)*
Report the middle initial of the on-site Qualified Individual who conducted or oversaw the test.

AETB Name *(AETBName)*
Report the name of the Air Emission Testing Body that performed the test.

AETB Phone Number *(AETBPhoneNumber)*
Report the phone number of the Air Emission Testing Body that performed the test. The number should contain dashes and be formatted as 999-999-9999.

AETB Email *(AETBEmail)*
Report the email address of the Air Emission Testing Body that performed the test.

ExamDate *(ExamDate)*
Report the date that the on-site Qualified Individual took and passed the relevant qualification exam(s) for the reference method(s) that were performed during the test.

Provider Name *(ProviderName)*
Report the name of the provider(s) of the qualification test that took place on the exam date.

Provider Email *(ProviderEmail)*
Report the email address of the provider(s) of the qualification test that took place on the exam date.

4.0 Miscellaneous Tests

Miscellaneous Tests Overview

You only need to use the TEST SUMMARY DATA record to report the following miscellaneous test types:

- DAHS verification;
- Leak Check for Differential Pressure-type Flow Monitor;
- Primary Element Inspection for orifice, nozzle or venturi-type fuel flowmeter;
- PEMS three-run Relative Accuracy Audit (RAA) with RM or portable analyzer;
- Gas flow meter calibration (sorbent trap monitoring systems);
- Temperature sensor calibration (sorbent trap monitoring systems); and
- Barometer calibration (sorbent trap monitoring systems).

If you are required to perform some additional type of test that has not been defined except through a petition or policy instruction, report the results of that testing in a TEST SUMMARY DATA record by identifying the test type as “OTHER” and providing a description of the test in the Test Description field.

Miscellaneous Tests XML Model

Figure 51: Miscellaneous Tests XML Structure

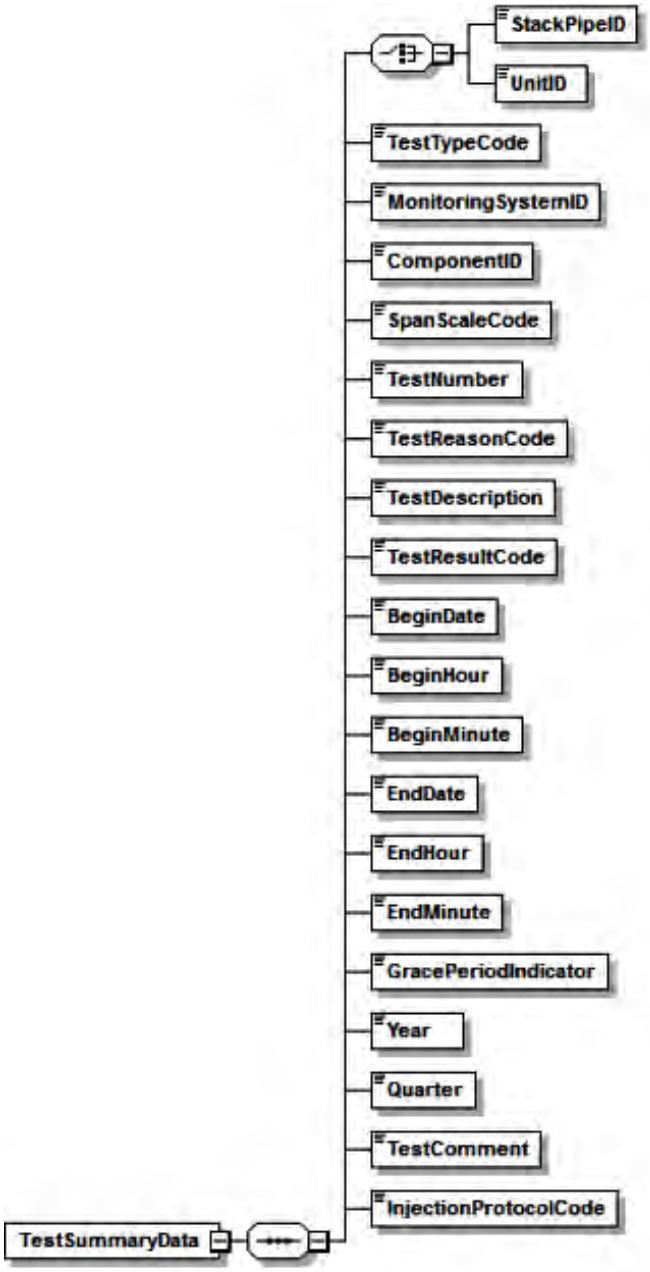

Test Summary Data XML Elements for Miscellaneous Tests

Unit ID or Stack Pipe ID *(UnitStackPipeID)*
Report the Unit ID or Stack Pipe ID that corresponds to the test location.

Test Type Code *(TestTypeCode)*
Report the code from Table 43 indicating the type of test performed.

Table 43: Miscellaneous Test Type Codes and Descriptions

Code	Description
DAHS	DAHS Verification
DGFMCAL	Dry gas meter calibration (sorbent trap monitoring system)
MFMCAL	Mass flow meter calibration (sorbent trap monitoring system)
TSCAL	Temperature sensor calibration (sorbent trap monitoring systems)
BCAL	Barometer calibration (sorbent trap monitoring systems)
QGA	Quarterly Gas Audit (HCl and HF monitoring systems)
LEAK	Differential Pressure-Type Flow Monitor Leak Check
OTHER	Other Test
PEI	Primary Element Inspection
PEMSACC	Three-run Relative Accuracy Audit (RAA) for PEMS with RM or Portable Analyzer

Monitoring System ID *(MonitoringSystemID)*
If the test is performed at the System level (e.g., PEMSACC), report the three-character ID assigned to the monitoring system. For tests that are not system level (e.g., DAHS, LEAK, DGFMCAL, MFMCAL, and PEI), leave the System ID blank and report the three-character Component ID for the component being tested. For test type QGA, report the ID number of relevant component type “HCL” or “HF”

(Note: For test types DGFMCAL, MFMCAL, TSCAL, and BCAL, report the ID number of component type “STRAIN”).

Component ID *(ComponentID)*
Report the three-character IDs assigned to the component. If a Component ID is *not* reported, you must report a Monitoring System ID for the system being tested.

Span Scale Code *(SpanScaleCode)*
Leave this field blank. It does not apply to any miscellaneous test type.

Test Number (TestNumber)
At each monitoring location and for each test type, report a unique test number for each set of records which comprises a single test. One method of tracking unique test numbers is to use the System ID or Component ID as a prefix to the number. The test number may <u>not</u> be reused at this location for the same test type.

Test Reason Code *(TestReasonCode)*
Report the purpose of the test using the appropriate code from Table 44.

Table 44: Miscellaneous Test Reason Codes and Descriptions

Code	Description	Applicable Test Types
INITIAL	Initial Certification	All test types, except LEAK
DIAG	Diagnostic	All test types
QA	Periodic Quality Assurance	All test types, except DAHS
RECERT	Recertification	All test types, except LEAK

Test Description *(TestDescription)*
If you report a Test Type Code of "OTHER," use this field to describe the test activity.

Otherwise, leave this field blank.

Test Result Code *(TestResultCode)*
Report the appropriate code from Table 45 below to indicate the result of the test.

Table 45: Miscellaneous Test Result Codes and Descriptions

Code	Description
ABORTED	Test was aborted due to problems with the installed monitoring system
FAILED	Test was failed
PASSED	Test was passed

Begin Date *(BeginDate)*
Leave this field blank. It does not apply to any miscellaneous test type.

Begin Hour *(BeginHour)*
Leave this field blank. It does not apply to any miscellaneous test type.

Begin Minute *(BeginMinute)*
Leave this field blank. It does not apply to any miscellaneous test type.

End Date *(EndDate)*
Report the date on which the test ended.

End Hour *(EndHour)*
Report the hour during which the test ended.

End Minute *(EndMinute)*
Report the minute at which the test ended.

Grace Period Indicator *(GracePeriodIndicator)*
For the leak check of a differential pressure-type flow monitor, report a "1" if the test was performed during a grace period and "0" if the test was performed either on-schedule or after the expiration of an allotted grace period. For other test types, leave this field blank.

Year *(Year)*
Leave this field blank. It does not apply to any miscellaneous test type.

Quarter *(Quarter)*
Leave this field blank. It does not apply to any miscellaneous test type.

Test Comment *(TestComment)*
Report a comment regarding the test if desired.

Injection Protocol Code *(InjectionProtocolCode)*
Leave this field blank. It does not apply to any miscellaneous test type.

5.0 QA Certification Event Data

QA Certification Event Data Overview

Normal operation and maintenance of monitoring systems usually necessitates replacement or repair of various components or changes to the type of equipment or software installed to measure and report emissions. These changes may occur unexpectedly during normal operation or according to a maintenance schedule. Diagnostic testing and in some instances certification or recertification testing is required when such repairs, component replacements, or equipment changes are made.

Submit one QA CERTIFICATION EVENT DATA record for each event requiring certification, recertification or other non-routine testing of a monitoring system. This data record identifies the nature of the event, the date and time it occurred, and the monitoring system and/or component to which it is relevant. Also, for ozone season only reporters, submit a QA CERTIFICATION EVENT DATA record when using conditional data validation in situations where the required QA linearity or RATA was not completed by the required deadline (i.e., April 30 or July 30, as applicable; see §75.74(c)(2)(ii)(F) and (c)(3)(ii)(E)).

The QA CERTIFICATION EVENT DATA record also defines any time period(s) during which data from a monitoring system are considered to be "conditionally valid" pending the outcome of the required certification, recertification, quality assurance, or diagnostic tests. Data are considered quality-assured when all of the required QA tests have been successfully completed. When "conditional" data validation is used, it must be done in accordance with procedures in §75.20(b)(3) prior to completing all of the required certification, recertification, or diagnostic testing. Under §75.20(b)(3), the conditionally valid data status begins when a probationary calibration error test is passed. If the required QA tests are then completed in a timely manner with no failures, the conditionally valid data are considered to be quality-assured back to the hour of completion of the probationary calibration error test.

Regarding recertifications, note that with one exception (i.e., changing of the polynomial coefficient(s) or K-factor(s) of a flow monitor or moisture monitoring system) the definition of a "recertification event" is limited to those non-routine changes to a monitoring system or process which require either: (1) RATA(s); (2) fuel flowmeter accuracy testing; (3) a full QA sequence of transmitter tests and primary element inspections (for orifice, nozzle and venturi-type fuel flowmeters); or (4) regeneration of an Appendix E NO_X correlation curve. Submittal of a formal recertification application is required only for such recertification events.

Note that when a monitoring system is replaced, a new, unique system ID is assigned and the new system must be tested for certification. When an analyzer is replaced in a previously certified system and a new system ID is assigned, this is also considered to be a certification event. If the old system ID is retained, it is considered to be a recertification event (refer to the Part 75 Emissions Monitoring Policy Manual).

Report a *QA Certification Event Data* record as follows:

- When conducting initial certification testing of any system on a new (or newly-affected) unit.

- Whenever recertification testing or diagnostic testing is required as a result of changes made to a previously certified monitoring system (or as the result of changes in the manner of operating the process). Refer to the Part 75 Emissions Monitoring Policy Manual.
- When a monitoring system is replaced with a new system (having a new system ID) and is tested for certification.
- When the conditional data validation procedures of §75.20(b)(3) are used following repair, corrective maintenance or reprogramming of the monitor (see Sections 2.2.3(b)(3) and 2.3.2(b)(3) of Appendix B).
- For ozone season-only reporters, when using conditional data validation because the required QA linearity check or RATA was not completed by the required deadline.
- If a routine quality assurance test is done for the dual purposes of routine QA and recertification (see Part 75, Appendix B, Section 2.4).
- For the required linearity checks and (if applicable) system integrity checks of non-redundant backup monitors and temporary "like-kind replacement" analyzers, when these monitors are brought into service (see §75.20(d)(2)(iii) and section 2.2.4 of Appendix A to 40 CFR Part 63, Subpart UUUUU).
- When the polynomial coefficients or K-factor(s) of a flow monitor or moisture monitoring system are changed, triggering an unscheduled RATA requirement.
- When a change from a non-CEMS-based monitoring methodology to a CEMS methodology occurs (e.g., changing from Appendix E to a CEMS for NO_X), and the conditional data validation procedures of §75.20(b)(3) are applied during the CEMS certification process.
- When recertification is required as a result of events referenced in §75.4.

Do not report a *QA Certification Event Data* record:

- For the routine periodic quality assurance tests required under Appendices B, D, and E of Part 75, or under section 5 in Appendix A to 40 CFR Part 63, Subpart UUUUU, except when conditional data validation is used.
- If the only diagnostic test required for a particular event is a calibration error test.
- For any event listed in the recertification and diagnostic testing tables in the Part 75 Emissions Monitoring Policy Manual that does not require QA CERTIFICATION EVENT DATA record to be submitted.
- When a change from a CEMS-based monitoring methodology to a non-CEMS methodology occurs (e.g., switching from an SO_2 CEMS to Appendix D, or changing from a NO_X CEMS to Appendix E). In such cases, simply use the MONITORING METHOD DATA records to indicate changes in monitoring methodology. However, if the opposite occurs, (i.e., changing from a non-CEMS-based methodology to CEMS), report a QA CERTIFICATION EVENT DATA record if the conditional data validation procedures of §75.20(b)(3) are applied during the CEMS certification process.

QA Certification Event Data XML Model

Figure 52: *QA Certification Event Data* XML Elements

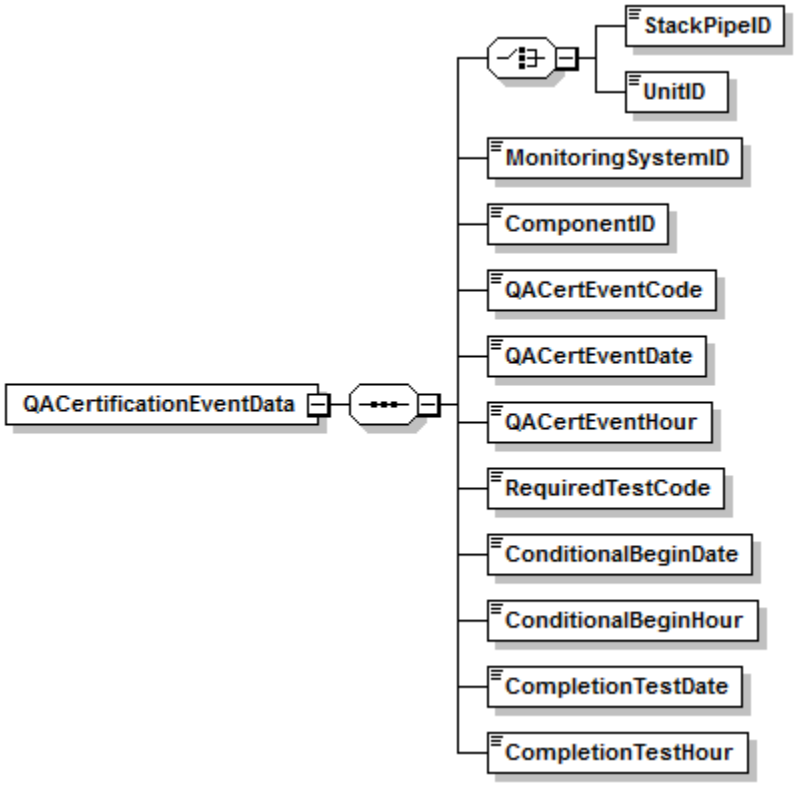

QA Certification Event Data XML Elements

Unit ID or Stack Pipe ID *(UnitID or StackPipeID)*
Report either the Unit ID or Stack Pipe ID that corresponds to the monitoring location applicable to the QA certification event being described. This is the alphanumeric code assigned by a source to identify a unit, stack, or pipe.

Monitoring System ID *(MonitoringSystemID)*
If the event requires any system-level tests (e.g., RATA), report the unique three-character alphanumeric IDs assigned to the monitoring system affected by the event. If a new monitoring system ID is assigned (e.g., when an entire monitoring system is replaced) report the new system ID number. If only component-level tests are required (e.g., linearity checks), leave this field blank.

Component ID *(ComponentID)*
If the event requires any component-level tests report the component ID subject to the certification/recertification/diagnostic testing. (If the event affects the entire system and requires tests on more than one component, be sure to report a QA Certification Event record for each applicable component.) If the event only requires system level tests (e.g., a RATA), leave this field blank. Examples of Event Codes that are system specific but not component-specific include 10, and 130.

QA Cert Event Code *(QACertEventCode)*
Report one of the codes in Table 46 to identify an event that occurred and requires some type of QA, Certification, Recertification, or Diagnostic testing.

Table 46: QA or Certification Event Codes and Descriptions

Code	Description
1	DAHS Vendor Change
2	DAHS Software Version Upgrade
3	DAHS Failure
5	Change or Insert New Temperature, Pressure, or Molecular Weight Correction Algorithms in the DAHS for a Dilution-Type Monitoring System
10	Change or Insert New Mathematical Algorithms in the DAHS to Convert NO Concentration to Total NO_X
15	Change Missing Data Algorithms
20	Installation of Add-on SO_2 Emission Controls
25	Installation of Add-on NO_X Emission Controls
26	Installation of Add-on NO_X Emission Controls – Low Range Not Added but Stratification Detected
27	Installation of Add-on NO_X Emission Controls – High Range Not Affected
30	Addition of a Low-Scale Measurement Range (Not associated with add-on control installation)
35	Addition of a High-Scale Measurement Range (Not associated with add-on control installation)
40	Construction of New Stack or Flue
50	Recertification Required Following Long Term Cold Storage or Shut Down as a Result of Planned or Forced Outage (reusing previously certified systems)
51	Recertification Required Following Long Term Cold Storage or Shut Down as a Result of Planned or Forced Outage (systems modified, or replaced)
99	Other
100	Permanent Gas Analyzer Replacement (Like-kind Analyzer, per Policy Question 7.13)
101	Permanent Gas Analyzer Replacement (Not Like-kind)
102	Replace or Repair any of These Components of an Extractive or Dilution-Type System -- Photomultiplier, Lamp, Internal Analyzer Filter or Vacuum Pump, Capillary Tube, O_3 Generator, Reaction Chamber, NO_2 Converter, Ozonator Dryer, Sample Cell, Optical Fibers
105	Permanent Replacement of Umbilical Line
106	Replace or Repair any of These Components of an In-Situ Monitoring System -- Light Source, Projection Mirrors, UV Filter, Fiberoptic Cable, Spectrometer Grating, Mirrors or Mirror Motor
107	Repair or Replace Circuit Board
108	Change the Location or Measurement Path of an In-Situ Monitor

Code	Description
109	Replacement of a Continuous Moisture Sensor
110	Gas Analyzer Probe Replacement (Same Location, Different Length)
120	New Gas Monitoring System (Complete Replacement or Methodology Change)
125	Initial Certification (Gas Monitoring System). Use this code only for CEM or PEMS certification at new and newly affected units
130	Gas Monitoring System Probe Relocation
140	Temporary Use of a Like-kind Replacement Non-redundant Backup Analyzer
141	Replacement of Primary Analyzer After Temporary Use of a Like-kind Replacement Analyzer
150	Temporary Use of a Regular Non-redundant Backup Monitoring System
151	Replacement of Primary Analyzer After Temporary Use of a Regular Non-redundant Backup Monitoring System
160	Changes to the Mathematical Algorithm or K-factor(s) of a Moisture Monitoring System
170	Change to the Span Value of a Gas Monitor
171	Change to the Low Range Span Value of a Gas Monitor
172	Change to the High Range Span Value of a Gas Monitor
175	Adjustment of a Gas Monitor Following Failed QA Test
180	Critical Orifice Replacement (Same Size). This code is not appropriate for probe components. Rather, report this code for the monitoring system or analyzer to be recertified as a result of the orifice change.
185	Critical Orifice Replacement (Different Size). This code is not appropriate for probe components. Rather, report this code for the monitoring system or analyzer to be recertified as a result of the orifice change.
190	Probe Replacement -- Dilution-Extractive Monitoring System (Same Length, Location, and Dilution Ratio)
191	Major Modification to Dilution Air Supply
192	Disassemble and Reassemble Dilution Probe for Service
195	Change from In-Stack to Out-of-Stack Dilution (or vice-versa)
200	For PEMS or Gas and/or Flow CEMS, Modification to the Flue Gas Handling System or Unit Operation That Significantly Changes the Flow or Concentration Profile (No other changes made to the monitoring systems)
250	Initial Certification of PEMS
251	For PEMS, Modification to the Flue Gas Handling System or Unit Operation That Significantly Changes the Flow or Concentration Profile
252	Changes to Instrumentation Used as Input to PEMS
253	Minor Change to PEMS Software
254	Expansion of PEMS Operating Envelope
255	PEMS Replacement

Code	Description
300	New Flow Monitoring System (Complete Replacement or Methodology Change)
301	Changes to the Polynomial Coefficients or K-factor(s) of a Flow Monitor
302	Flow Monitor Transducer Replacement
305	Initial Certification (Flow Monitor). Use this code only: (a) for flow monitor certification at new and newly-affected units; or (b) when reconfiguration occurs (e.g., switching from common stack to unit-level monitoring)
310	Other Major Flow Monitor Component Replacement or Repair (e.g., DP Probe, Thermal Sensor, Transducer Electronics)
311	Flow Monitor Relocation
312	Stack Flow-to-Load Ratio or GHR Test Failure
400	Fuel Flowmeter Replacement
401	Fuel Flowmeter Transmitter/Transducer Replacement
402	Fuel Flowmeter Primary Element Replacement (Orifice, Nozzle or Venturi-type, Same Dimensions)
403	Fuel Flowmeter Primary Element Replacement (Orifice, Nozzle or Venturi-type, Different Dimensions)
405	Fuel Flowmeter Primary Element Replacement (Other Types of Flowmeters)
410	Fuel Flow-to-Load or GHR Test Failure
501	For Appendix E Systems, Modifications to the Flue Gas Handling System or Unit Operation that Significantly Changes the Flow or Concentration Profile Requiring a Retest Under Appendix E to Part 75 to Reestablish the NO_X Correlation Curve
502	For Appendix E Units, Exceeding the Excess O_2 Level for > 16 Consecutive Operating Hours
503	For Appendix E Units, Exceeding the Water to Fuel or Steam to Fuel Rates for > 16 Consecutive Operating Hours
504	For Appendix E Units, Exceeding Other QA/QC Parameters for > 16 Consecutive Operating Hours
600	Opacity Monitor or Particulate Matter Monitor Complete Replacement
605	Initial Certification of Opacity Monitor
610	Opacity Monitor or Particulate Matter Monitor Transceiver Replacement
620	Opacity Monitor or Particulate Matter Monitor Transceiver Factory Rebuild
630	Opacity Monitor or Particulate Matter Monitor Relocation
700	For a Low Mass Emissions (LME) Unit, a Change to the Unit or to the Fuel Supply or Manner of Unit Operation, Requiring Re-determination of the Unit-specific, Fuel-specific NO_X Emission Rate
800	Conditional Data Validation used when QA test not completed by deadline (Ozone Season-Only Reporters)

QA Cert Event Date *(QACertEventDate)*
Report the date of the event. If the monitoring system is deemed to be out-of-control (unable to provide quality-assured data) as a result of changes made to the system, report the date of that change. If there is no out-of-control period associated with a particular event, report the date and hour of the beginning of the event. This date and hour must precede the date and hour of commencement of the required diagnostic or recertification tests.

Consider the following scenarios:

- For certifications and recertifications triggered by the replacement of a monitoring system or an analyzer, report the date and hour on which the replacement monitoring system or analyzer is first installed.
- For the initial certification of monitoring systems on new (or newly-affected) units (QA Cert Event Codes 125 and 305), report a date and hour that predates, but is close in time to, the commencement date and hour of the certification testing. If you use the conditional data validation procedures of §75.20(b)(3), the beginning date and hour of the certification event must precede the date and hour of the probationary calibration error test.
- For installation of add-on controls or the construction of a new stack or flue (QA Cert Event Codes 20 through 26, and 40), report the date on which emissions first exited to the atmosphere through the new operating controls, stack, or flue. (Refer to the Part 75 Emissions Monitoring Policy Manual.)
- When a DAHS is replaced or the DAHS software version is upgraded, and the old and new platforms or software versions are run in parallel (so that there may be a smooth transition from the old to the new, with no monitoring system out-of-control periods associated with the DAHS replacement or upgrade), report the date and hour at which the new DAHS platform or software version first begins to be run in parallel with the old platform or version.
- For recertification of monitoring systems following long-term shutdown (QA Cert Event Code 50), report the date and hour when the unit recommences commercial operation.
- For ozone season-only reporters who missed the deadline to perform their QA tests and are using conditional data validation procedures (QA Cert Event Code 800), report the <u>earlier</u> of the date and hour of the probationary calibration error test and the date and hour that the QA test was due (May 1 Hour 0 for second-quarter tests, July 31 Hour 0 for third-quarter tests).

QA Cert Event Hour *(QACertEventHour)*
Report the hour of the event as described above under QA Cert Event Date.

Required Test Code *(RequiredTestCode)*
Report one of the codes from Table 47 to specify the test or tests required for the applicable event. These tests should correspond to the event identified by the QA Cert Event Code. Note that for CEMS, these codes describe only the full QA tests that are required, not the simplified linearity and cycle time diagnostic tests described in the recertification and diagnostic testing section of the Part 75 Emissions Monitoring Policy Manual. The abbreviated diagnostic tests are not required to be reported to EPA.

Table 47: Required Test Codes and Descriptions

Code	Description
1	3-Load RATA, 7-Day Calibration Error Test
2	Normal Load RATA, 7-Day Calibration Error Test, Linearity Check, Cycle Time Test
3	3-Load RATA, 7-Day Calibration Error Test, DAHS Verification
4	Normal Load RATA, 7-Day Calibration Error Test, Linearity Checks, Cycle Time Test, DAHS Verification
5	Normal Load RATA
6	3-Load Flow RATA
7	2-Load Flow RATA
8	Normal Load RATA, Linearity Checks
9	Linearity Checks
10	Linearity Checks, 7-Day Calibration Error Test
11	Normal Load RATA, 7-Day Calibration Error Test, Linearity Checks
12	Normal Load RATA, Linearity Checks, Cycle Time Test
13	Normal Load RATA, 7-Day Calibration Error Test, Cycle Time Test
14	7-Day Calibration Error Test, Cycle Time Test
15	Normal Load RATA, 7-Day Calibration Error Test, Leak Check
16	Normal Load RATA, Cycle Time Test
17	Linearity Checks, Cycle Time Test
18	7-Day Calibration Error Test
19	Cycle Time Test
20	DAHS Verification (Formulas)
21	DAHS Verification (Missing Data Routines)
22	DAHS Verification (Formulas and Missing Data)
23	DAHS Verification (Formulas and Missing Data), Daily Calibration Error Test
24	Off-line Calibration Demonstration
25	Off-line Calibration Demonstration, 7-Day Calibration Error Test
26	Abbreviated Stack Flow-to-Load Ratio Test
27	3-Load RATA, 7-Day Calibration Error Test, Leak Check
28	Abbreviated Stack Flow-to-Load Ratio Test and possibly a leak check (if DP Trans)
29	Leak Check (Differential Pressure Monitors Only)

Code	Description
30	Normal Load RATA, 7-Day Calibration Error Test, Linearity Check, Cycle Time Test, 3-Level System Integrity Check
31	Normal Load RATA, Linearity Check, Cycle Time Test, 3-Level System Integrity Check
32	Normal Load RATA, 7-Day Calibration Error Test, Linearity Check, 3-Level System Integrity Check
33	Normal Load RATA, Linearity Check, 3-Level System Integrity Check
34	Linearity Check, Single-Point System Integrity Check
35	Gas Audit
36	Normal Load RATA, Gas Audit
40	Angle of View, Angle of Projection, Mean Spectral Response, Response Time, Calibration Drift Test, Stack Exit Correction Factor
42	Stack Exit Correction Factor
51	Fuel Flowmeter Accuracy Test
52	Fuel Flowmeter Transmitter Test, Primary Element Inspection
53	Fuel Flowmeter Transmitter Test
54	Primary Fuel Flowmeter Element Inspection
55	Abbreviated Fuel Flow-to-Load Test
56	Fuel Flowmeter Transmitter Test, Primary Element Inspection, Re-determine Flow Coefficients
57	Primary Element Inspection, Re-determine Flow Coefficients
75	Retest of the Appendix E NO_X Correlation Curve
76	Re-determination of the Unit-Specific, Fuel-Specific NO_X Emission Rate for a Low Mass Emissions (LME) Unit
77	Hg LME Default Test
80	PEMS Sensor Validations, Daily QA/QC, Statistical Tests, RATA (at least 30 test runs at each of three loads)
81	PEMS Daily QA/QC, 3-Run Relative Accuracy Audit (RAA) with RM, or Portable Analyzer
82	PEMS Daily QA/QC
99	Other (Note That Recertification Application May Be Required)

Conditional Begin Date *(ConditionalBeginDate)*
If applicable, report the date on which conditional data validation began. For gas CEMs (including Hg, HCl, and HF) or flow monitoring systems only, whenever using the conditional data validation procedures of §75.20(b)(3), report the date that a probationary calibration error test was successfully completed according to the provisions of §75.20(b)(3). Data are conditionally valid from that date until all required tests are passed, provided that all tests are passed in succession, within the allotted window of time, with no failures.

Note that in most instances, the allotted time for completing the required tests will be as specified in §75.20(b)(3)(iv). However, for the initial certification of the CEMS installed on a new (or a newly affected) unit, the timelines in §75.20(b)(3)(iv) are superseded by the certification window provided in the applicable regulation. Leave these fields blank if the conditional data validation procedures in §75.20(b)(3) are not used. Also, leave this field blank for excepted monitoring systems under Appendices D or E to Part 75. When a new stack is constructed or when add-on SO_2 or NO_X emission controls are installed, a longer window of time is allotted in §75.4(e) for the required certification, recertification and/or diagnostic testing (refer to the Part 75 Emissions Monitoring Policy Manual).

Also, if the Event Code indicates initial certification, analyzer replacement, or complete replacement of a monitoring system (Event Codes 40, 50, 51, 100, 101, 120, 125, 151, 250, 255, 300 or 305) and conditional data validation is used, a BAF of 1.000 should be applied to the hourly data (where applicable) from the beginning of the conditional data validation period to the completion hour of the certification or recertification RATA. For any other events that require a RATA, apply the BAF from their previous RATA during the conditional data period, unless that RATA failed or was aborted, in which case use 1.000.

Conditional Begin Hour *(ConditionalBeginHour)*
If applicable, report the hour during which conditional data validation began.

Completion Test Date *(CompletionTestDate)*
Report the date on which the last required certification, recertification or diagnostic test was successfully completed. Leave this field blank if all of the required tests have not been successfully completed at the time you submit the QA Certification Data file with this QA CERTIFICATION EVENT DATA record. To ensure closure of this event, when the required tests are completed, update this record with the test completion date and hour and resubmit the record.

Completion Test Hour (CompletionTestHour)
Report the hour during which the last required certification, recertification or diagnostic test was successfully completed. Leave this field blank if the required tests have not been successfully completed at the time you submit the QA Certification Data file with this QA CERTIFICATION EVENT DATA record.

Specific Considerations

The following typical certification, recertification, and maintenance events would be reported in this record.

- Replacement of an entire continuous emission monitoring system;
- Change-outs of analytical or other monitoring system components;
- DAHS vendor changes or software version upgrades;
- Changing of the polynomial coefficient(s) or K-factor(s) of a flow monitor or moisture monitoring system;
- Modification to the flue gas handling system or unit operation that significantly changes the flow or concentration profile;

- Probe location change, for gas monitoring systems;
- Flow monitor location change; and
- Other system modifications that require one or more tests, as determined in accordance with the EPA policy (refer to the Part 75 Emissions Monitoring Policy Manual) or through consultation with EPA Regional Office and Headquarters staff.

6.0 Test Extension Exemption Data

Test Extension Exemption Data Overview

To claim a quarter-specific test extension or exemption from the standard QA test schedule or requirements under any program, report a TEST EXTENSION EXEMPTION DATA record. Each record identifies the monitoring system and/or component to which the extension or exemption applies the year and quarter of the extension or exemption, and a code indicating the specific type of extension or exemption being claimed.

Use this record to claim the following types of extensions and exemptions:

For CEM systems:

- Only very low-sulfur fuel was combusted this quarter (extends SO_2 RATA deadline).
- Analyzer Range was not used this quarter and fewer than four calendar quarters have elapsed since the last linearity check on this range (exempts from linearity on that range).
- Year-to-date usage of this "regular" non-redundant backup monitoring system is no more than 720 hours and fewer than eight full quarters have elapsed since the last RATA (see §75.20(d)).
- Emissions exhausted during quarter for less than 168 operating hours through a bypass stack on which a primary-bypass (PB) monitoring system is located (exempts monitor from linearity and RATA). Note that these records are only available for submissions/ resubmissions of data collected prior to 2021.
- Emissions exhausted during quarter for more than 168 operating hours through a bypass stack on which a primary bypass (PB) monitoring system is located but the system is still within the 720-operating hour grace period for the previous RATA (exempts monitor from RATA). Note that these records are only available for submissions/ resubmissions of data collected prior to 2021.

For non-CEM systems:

- This calendar quarter was not a "fuel flowmeter QA operating quarter" (as defined in 40 CFR 72.2) for an ozone season-only reporter during quarters one, two, and four (extends Fuel Flow Accuracy test schedule).
- Duct burner on combined-cycle turbine operated less than 168 operating hours during quarter (extends accuracy test deadline for fuel flowmeter feeding the duct burner by one quarter).

Do NOT use this record to claim the following types of extensions and exemptions, because these extensions and exemptions are being determined through other reporting mechanisms:

- This calendar quarter was not a QA operating quarter (i.e., location operated less than 168 operating hours). (This is determined from hourly emissions data.)
- This calendar quarter was not a fuel flowmeter QA operating quarter (*except as noted above*). (This is determined from hourly emissions data.)

- A claim for a 168-hour or 720-hour grace period extension. (This is determined from hourly emissions data.)
- Linearity test exemption when span value for SO_2 or NO_X is less than 30 ppm. (This is determined from the span record in the monitoring plan.)
- Extension of fuel flow accuracy testing through fuel flow-to-load testing. (This is reported in a fuel flow-to-load test.)
- Special RATA claims (i.e., single-load flow claim, non-normal operating level claim, operating range exception). (This is reported with the RATA in a Test Qualification record.)

Test Extension Exemption Data XML Model

Figure 53: *Test Extension Exemption Data* XML Elements

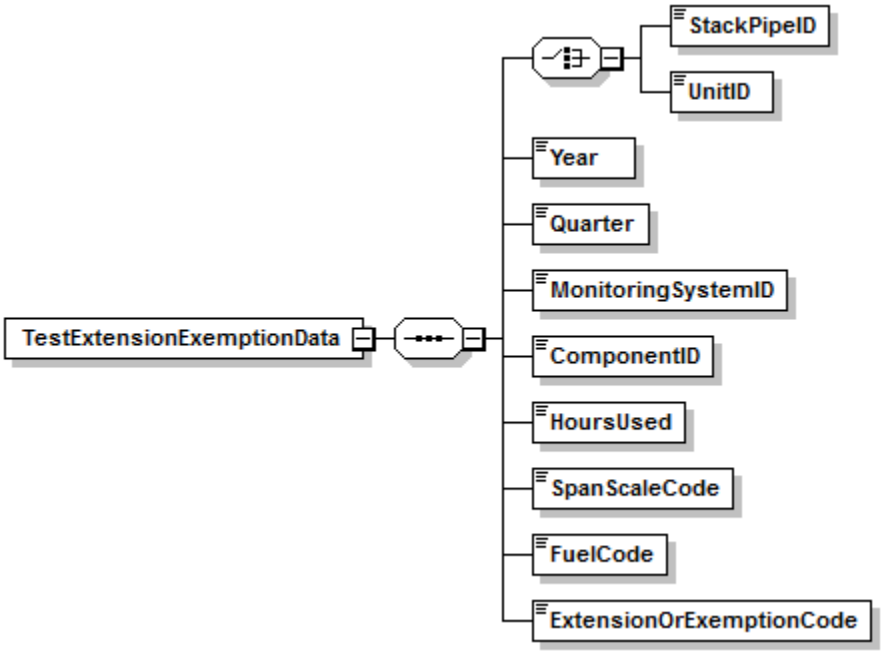

Test Extension Exemption Data XML Elements

Unit ID or Stack Pipe ID *(UnitID or StackPipeID)*
Report either the Unit ID or Stack Pipe ID.

Year *(Year)*
Report the Year to which the extension or exemption applies.

Quarter *(Quarter)*
Report the Quarter to which the extension or exemption applies.

Monitoring System ID *(MonitoringSystemID)*
If applicable, report the three-character ID assigned to the system to which the extension or exemption applies. The following exemption types require System ID: LOWSQTR,

LOWSYTD,~~GRACEPB,~~ and NRB720.~~, and NONQAPB.~~ If the extension or exemption applies only at a component level, leave this field blank.

Component ID *(ComponentID)*
If applicable, report the three-character ID assigned to the component to which the extension or exemption applies. The following exemption type requires Component ID: RANGENU, NONQAPB, and NONQADB. If the extension or exemption applies only at a system level, leave this field blank.

Hours Used *(HoursUsed)*
Report the quarterly or cumulative year-to-date hours, as appropriate. For RANGENU or LOWSQTR exemptions, report "0" (zero) to indicate that the applicable range was not used or higher sulfur fuel was not burned at all during the quarter. For LOWSYTD exemptions report the year-to-date usage of fuel with a sulfur content higher than very low sulfur fuel. For NONQAOS exemptions, report the number of hours during the quarter in which the fuel type measured by this fuel flowmeter system was burned. For NRB720 exemptions, report the year-to-date usage of the non-redundant backup monitoring system. ~~For NONQAPB exemptions, report the number of operating hours when emissions were exhausted through the bypass stack.~~ For NONQADB exemptions, report the number of operating hours for the duct burner.

Span Scale Code *(SpanScaleCode)*
For exemption type "RANGENU," report "H" or "L" to indicate which range was not used.

Fuel Code *(FuelCode)*
For exemption type NONQAOS, report the fuel type for which the extension is being claimed by selecting from the Fuel Codes shown in Table 48.

Table 48: Fuel Codes and Descriptions for Test Extension Exemption

Code	Description
BFG	Blast Furnace Gas
BUT	Butane (if measured as a gas)
CDG	Coal-Derived Gas
COG	Coke Oven Gas
DGG	Digester Gas
DSL	Diesel Oil
LFG	Landfill Gas
LPG	Liquefied Petroleum Gas (as defined in §72.2)
NNG	Natural Gas
OGS	Other Gas
OIL	Residual Oil
OOL	Other Oil
PDG	Producer Gas
PNG	Pipeline Natural Gas (as defined in §72.2)

Code	Description
PRG	Process Gas
PRP	Propane (if measured as a gas)
RFG	Refinery Gas
SRG	Unrefined Sour Gas

Extension or Exemption Code *(ExtensionOrExemptionCode)*
Report the code from Table 49 that corresponds to the type of exemption or extension you are claiming.

Table 49: Test Extension or Exemption Code

Code	Claim Description and Instructions
LOWSQTR	SO_2 RATA deadline extension claimed for this quarter. This location combusts both very low-sulfur fuel and higher sulfur fuel, but only very low-sulfur fuel was combusted this quarter (and no more than eight calendar quarters have elapsed since the quarter in which the last SO_2 RATA was performed).
LOWSYTD	Conditional SO_2 RATA Exemption Claimed. As of the end of this quarter, year-to-date usage of fuel with a sulfur content higher than very low-sulfur fuel is less than 480 hours.
GRACEPB	For use with data collected~~submissions~~ prior to 2021 only. Extension of RATA test deadlines claimed for Primary Bypass (PB) monitors located on a bypass stack to indicate when the monitored bypass stack operated more than 168 hours in the quarter but remains within the 720-operating hour grace period.
NONQAOS	Extension of Fuel Flow Accuracy test deadline claimed for this non-fuel flowmeter QA operating quarter (there were fewer than 168 hours during the quarter in which the fuel type measured by this fuel flowmeter system was burned). Report this claim, as applicable, for ozone season-only reporters for quarters 1, 2 and 4.
NONQAPB	For use with data collected~~submissions~~ prior to 2021 only. Extension of RATA or Linearity test deadlines claimed for Primary Bypass (PB) monitors located on a bypass stack to indicate when the monitored bypass stack operated less than 168 hours. ~~Grace periods and other extensions will be tracked solely on the unit operating basis. Grace period hours on the bypass stack will not be tracked by ECMPS and should be tracked by the source.~~
NRB720	Conditional RATA Exemption Claimed for this system. Year-to-date usage of this non-redundant backup monitoring system is no more than 720 hours and fewer than eight full quarters have elapsed since the last RATA.
RANGENU	Exemption from linearity test at this range claimed because this analyzer range was not used during this calendar quarter.
NONQADB	Extension of fuel flow accuracy or transmitter transducer test deadline claimed for fuel flowmeters feeding duct burners in combined cycle turbines when the duct burner operated less than 168 hours.
F2LEXP	Exemption from Flow to Load Check Testing under 40 CFR Part 75, Appendix A, Section 7.8(a). Use of this code requires EPA approval.