START 3

Superfund Technical Assessment and Response Team 3 - Region 8

FEASIBILITY STUDY REPORT
STANDARD MINE

Gunnison County, Colorado
TDD No. 0608-07

MAY 14, 2010

URS
OPERATING SERVICES, INC.

United States
Environmental Protection
Agency
Contract No. EP-W-05-050

DRAFT FEASIBILITY STUDY REPORT

STANDARD MINE
Gunnison County, Colorado

EPA Contract No. EP-W-05-050
TDD No. 0608-07

Prepared By:

URS Operating Services, Inc.
1099 18th Street, Suite 710
Denver, CO 80202-1908

Approved: _____ Date: _____
Christina Progess, Remedial Project Manager, EPA, Region 8

Approved: _____ Date: _____
Charles W. Baker, START 3 Program Manager, UOS

Approved: _____ Date: _____
Jan Christner, Project Manager, START 3, UOS

This document has been prepared for the U.S. Environmental Protection Agency under Contract No. EP-W-05-050. The material contained herein is not to be disclosed to, discussed with, or made available to any person or persons for any reason without prior express approval of a responsible officer of the U.S. Environmental Protection Agency. In the interest of conserving natural resources, this document is printed on recycled paper and double-sided as appropriate.

DISTRIBUTION LIST

U.S. ENVIRONMENTAL PROTECTION AGENCY

Christina Progess (2 copies)	Remedial Project Manager, EPA Region 8

U.S. FOREST SERVICE

Mark Hatcher	U.S. Forest Service
Linda Lanham	AML/HazMat/Minerals Manager, U.S. Forest Service
Brian Lloyd	U.S. Forest Service Rocky Mountain Region

COLORADO DEPARTMENT OF PUBLIC HEALTH AND ENVIRONMENT

Jim Lewis (2 copies)	Project Manager, CDPHE
Barbara Nabors	Superfund and Site Assessment Unit Leader, Hazardous Materials and Waste Management Division, CDPHE

TOWN OF CRESTED BUTTE

John Hess	Town of Crested Butte

URS OPERATING SERVICES, INC.

Jan Christner	Project Manager, START 3, EPA Region 8
File (2 copies)	START 3, EPA Region 8

DRAFT FEASIBILITY STUDY REPORT

STANDARD MINE
Gunnison County, Colorado

TABLE OF CONTENTS

		Page No.
SIGNATURE PAGE		**i**
DISTRIBUTION PAGE		**ii**
TABLE OF CONTENTS		**iii**
LIST OF ACRONYMS		**viii**
1.0	**INTRODUCTION**	**1-1**
1.1	Purpose of Report	1-1
1.2	Site Background	1-1
1.2.1	Site Description	
1.2.2	Site History	
1.2.2.1	Mining History	
1.2.2.2	Regulatory History and Removal Actions	
1.2.3	Current Site Conditions	
1.2.3.1	Level 1	
1.2.3.2	Level 2	
1.2.3.3	Level 3	
1.2.3.4	Level 4	
1.2.3.5	Level 5	
1.2.3.6	Level 98	
1.2.3.7	Groundwater	
1.2.3.8	Surface Water and Sediment	
1.2.4	Risk Assessment Summary	
1.2.5	Conceptual Site Model	
1.3	Report Organization	1-10
2.0	**REMEDIAL ACTION OBJECTIVES, POTENTIALLY APPLICABLE OR RELEVANT AND APPROPRIATE REQUIREMENTS, AND PRELIMINARY REMEDIATION GOALS**	
2.1	Removal Action Objectives	2-1
2.2	Remedial Action Objectives	2-1
2.3	Potentially Applicable or Relevant and Appropriate Requirements (ARARS)	2-2
2.3.1	Groundwater	
2.3.2	Surface Water	
2.3.3	Drinking Water	
2.3.4	Wetlands and Floodplains	
2.3.5	Solid and Hazardous Waste Management	
2.3.6	Air	
2.3.7	Soil and Sediment	
2.3.8	Mining Reclamation	
2.3.9	Environmental Covenants	
2.3.10	Fish and Wildlife	
2.3.11	Historic Properties, Landmarks, and Natural Areas	
2.3.12	Noise Control	
2.4	Preliminary Remediation Goals	2-7

TABLE OF CONTENTS (Continued)

Page No.

3.0 IDENTIFICATION AND SCREENING OF TECHNOLOGIES AND PROCESS OPTIONS
3.1 General Response Actions 3-1
3.2 Identification and Screening of Technology Types and Process Options 3-2
3.2.1 No Further Action
3.2.2 Institutional Controls
3.2.3 Collection, Diversion, or Containment
3.2.3.1 Collection
3.2.3.2 Diversion
3.2.3.3 Containment
3.2.4 Treatment
3.2.4.1 Physical Treatment Technologies
3.2.4.2 Chemical Treatment Technologies
3.2.4.3 Biological Treatment Technologies
3.2.5 Removal and Disposal
3.2.6 Re-Use
3.3 Selection of Technology Types and Process Options 3-20
3.4 Pilot Studies 3-20
3.4.1 Passive Water Treatment Pilot Study
3.4.2 Mixing Study
3.4.3 BCR Effluent Toxicity Testing
3.4.4 Soil Amendment and Revegetation Pilot Study

4.0 DEVELOPMENT OF ALTERNATIVES 4-1
4.1 Alternative 1 – No Further Action 4-1
4.1.1 Rationale for Inclusion of Alternative 1
4.1.2 Alternative 1 Description
4.2 Alternative 2 – Institutional Controls and Monitoring 4-1
4.2.1 Rationale for Inclusion of Alternative 2
4.2.2 Alternative 2 Description
4.3 Alternative 3 – Passive Water Treatment System 4-2
4.3.1 Rationale for Inclusion of Alternative 3
4.3.2 Alternative 3 Description
4.3.2.1 PTS Design Assumptions
4.3.2.2 Unit Processes and Engineering Controls
4.3.2.3 PTS Alternatives
4.3.2.4 Operation and Maintenance
4.4 Alternative 4 – Lucky Jack Water Treatment Plant 4-12
4.4.1 Rationale for Inclusion of Alternative 4
4.4.2 Alternative 4 Description
4.5 Alternative 5 – Bulkhead at Level 1 4-14
4.5.1 Rationale for Inclusion Of Alternative 5
4.5.2 Alternative 5 Description
4.5.2.1 Alternative 5A Description – Impermeable Bulkhead
4.5.2.2 Alternative 5B Description – Flow-Through Bulkhead
4.6 Alternative 6 – Surface Water Diversion 4-17
4.6.1 Rationale for Inclusion of Alternative 6
4.6.2 Alternative 6 Description
4.7 Alternative 7 – Flowable Fill and Foam in Level 3 4-19

TABLE OF CONTENTS (Continued)

Page No.

4.7.1 Rationale for Inclusion of Alternative 7
4.7.2 Alternative 7 Description
4.8 Alternative 8 – Horizontal Drains in Level 3 4-21
4.8.1 Rationale for Inclusion of Alternative 8
4.8.2 Alternative 8 Description
4.9 Alternative 9 – Surficial Extraction Wells 4-23
4.9.1 Rationale for Inclusion of Alternative 9
4.9.2 Alternative 9 Description
4.9.2.1 Alternative 9A Description – Sub-Horizontal Extraction Wells
4.9.2.2 Alternative 9B Description – Vertical Extraction Wells
4.10 Alternative 10 – Contamination Source Control at Level 2 4-26
4.10.1 Rationale for Inclusion of Alternative 10
4.10.2 Alternative 10 Description
4.11 Alternative 11 – Soil Amendment and Revegetation 4-28
4.11.1 Rationale for Inclusion of Alternative 11
4.11.2 Alternative 11 Description

5.0 DETAILED ANALYSIS OF ALTERNATIVES 5-1
5.1 Evaluation Criteria 5-1
5.1.1 Threshold Criteria
5.1.2 Balancing Criteria
5.1.3 Modifying Criteria
5.1.4 Development of Alternative Costs
5.2 Individual Analysis of Alternatives 5-5
5.2.1 Alternative 1 – No Action
5.2.2 Alternative 2 – Institutional Controls
5.2.3 Alternative 3 – Passive Water Treatment System
5.2.4 Alternative 4 – Treatment at Mt. Emmons Project Water Treatment Plant
5.2.5 Alternative 5 – Bulkhead at Level 1
5.2.6 Alternative 6 – Surface Water Diversion
5.2.7 Alternative 7 – Flowable Fill and Foam in Level 3
5.2.8 Alternative 8 – Horizontal Drains in Level 3
5.2.9 Alternative 9 – Surficial Extraction Wells
5.2.10 Alternative 10 – Contamination Source Control at Level 2
5.2.11 Alternative 11 – Soil Amendment and Revegetation

6.0 COMPARATIVE ANALYSIS OF ALTERNATIVES AND PHASED APPROACH 6-1
6.1 Comparative Analysis of Alternatives 6-1
6.1.1 Overall Protection of Human Health and the Environment
6.1.1.1 Surface Water Quality
6.1.1.2 Groundwater Quality
6.1.1.3 Soil
6.1.2 Compliance with ARARs
6.1.2.1 Groundwater
6.1.2.2 Surface Water
6.1.2.3 Protection of Wetlands and Floodplains
6.1.2.4 Solid and Hazardous Waste

TABLE OF CONTENTS (Continued)

Page No.

6.1.2.5 Air
6.1.2.6 Fish and Wildlife
6.1.2.7 Noise
6.1.2.8 Ranking of Compliance With ARARs
6.1.3 Long-Term Effectiveness and Permanence
6.1.3.1 System Reliability
6.1.3.2 Operations & Maintenance
6.1.3.3 Residual Risk
6.1.3.4 Ranking of Long-Term Effectiveness and Permanence
6.1.4 Reduction of Toxicity, Mobility, and Volume through Treatment
6.1.4.1 Ranking of Reduction in Toxicity, Mobility, and Volume
6.1.5 Short-Term Effectiveness
6.1.5.1 Community Protection
6.1.5.2 Worker Protection
6.1.5.3 Time to Achieve RAO's
6.1.5.4 Environmental Impacts
6.1.5.5 Ranking of Short-Term Effectiveness
6.1.6 Implementability
6.1.6.1 Availability of Materials
6.1.6.2 Concerns During Construction
6.1.6.3 Monitoring
6.1.6.4 Administrative Feasibility
6.1.6.5 Constructability
6.1.6.6 Ranking of Implementability
6.1.7 Cost
6.1.8 Overall Ranking
6.2 Combination of Alternatives 6-16

7.0 PREFERRED ALTERNATIVE 7-1

8.0 LIST OF REFERENCES 8-1

FIGURES
(Note: Figures show date of preparation)

Figure 1-1 Surface Water Monitoring Locations
Figure 1-2 Site Map
Figure 1-3 Standard Mine Workings Cross Section (Carpenter 1958)
Figure 1-4 Level 2 Mine Workings (DRMS 2009)
Figure 1-5 Level 3 Mine Workings (DRMS 2007)
Figure 1-6 Level 5 Mine Workings (DRMS 2007)

Figure 3-1 Pilot-Scale Passive Water Treatment System Layout (Golder 2009a)

Figure 4-1 Available Land for a PTS
Figure 4-2 Alternative 3A Process Flow
Figure 4-3 Alternative 3A Design and Layout
Figure 4-4 Alternative 3B, 3C, and 3E Process Flow

TABLE OF CONTENTS (continued)

Figure 4-5 Alternative 3B Design and Layout
Figure 4-6 Alternative 3C Design and Layout
Figure 4-7 Alternative 3D Process Flow
Figure 4-8 Alternative 3D Design and Layout
Figure 4-9 Alternative 3E Design and Layout
Figure 4-10 Alternative 4 – Mount Emmons Project WTP
Figure 4-11 Typical Portal Gate Closure
Figure 4-12 Alternative 5 – Bulkhead in Level 1
Figure 4-13 Alternative 6 – Surface Water Diversion
Figure 4-14 Alternative 7 – Flowable Fill and Foam in Level 3
Figure 4-15 Alternative 7 – Flowable Fill and Foam in Level 3
Figure 4-16 Alternative 8 – Horizontal Drains in Level 3
Figure 4-17 Alternative 9A – Horizontal Extraction Wells
Figure 4-18 Alternative 9B – Vertical Extraction Wells
Figure 4-19 Alternative 10 – Contamination Source Control at Level 2
Figure 4-20 Alternative 10 – Contamination Source Control at Level 2

TABLES

Table 2-1 Applicable or Relevant and Appropriate Requirements
Table 2-2 Water Quality Standards

Table 3-1 Initial Screening of Technologies and Process Options
Table 3-2 Secondary Screening of Technologies and Process Options

Table 4-1 Alternative 3 – Design Basis Chemistry
Table 4-2 Alternative 3 – Process Sizing

Table 6-1 Comparison of Alternatives Summary

APPENDICES (Provided on Compact Disk)

Appendix A Passive Treatment Alternatives
Appendix B Cost Analysis for Alternatives 4 through 11

LIST OF ACRONYMS

ALD	Anoxic limestone drains
APC	Aerobic polishing cell
ARARs	Applicable or Relevant and Appropriate Requirements
BCR	Biochemical reactor
BERA	Baseline Ecological Risk Assessment
BHHRA	Baseline Human Health Risk Assessment
BOD	Biological oxygen demand
$CaCO_3$	Calcium carbonate
CCR	Colorado Code of Regulations
CDOW	Colorado Division of Wildlife
CDPHE	Colorado Department of Public Health and Environment
CDPS	Colorado Discharge Permit System
CERCLA	Comprehensive Environmental Response, Compensation, and Liability Act of 1980
CFR	Code of Federal Regulations
CMP	Corrugated metal pipe
CMU	Concrete masonry unit
COCs	Contaminants of concern
CRS	Colorado Revised Statutes
DO	Dissolved oxygen
DRMS	Colorado Division of Reclamation, Mining, and Safety
EE/CA	Engineering Evaluation/Cost Analysis
EPA	U.S. Environmental Protection Agency
ERT	Environmental Response Team
FDR	Forest Development Road
FS	Feasibility Study
gpm	Gallons per minute
HDPE	High density polyethylene
I.D.	Inner diameter
L	Liter
µg/L	micrograms per liter
MCLs	Maximum Contaminant Levels
MCLGs	Maximum Contaminant Level Goals
mg/L	milligrams per liter
MIW	Mining impacted water
mL	Milliliter
MRB	Manganese removal bed
NCP	National Contingency Plan
NPDES	National Pollutant Discharge Elimination System
NPL	National Priorities List
O&M	Operation and maintenance
ORD	EPA Office of Research and Development (or Office of Regional Development)
ORP	Oxidation reduction potential
OSHA	Occupational Safety and Health Administration
OSWER	Office of Solid Waste and Emergency Response
PRGs	Primary remediation goals
PTS	Passive treatment system
PUF	Polyurethane foam
PVC	Polyvinyl chloride
RAOs	Remedial Action Objectives
RCRA	Resource Conservation and Recovery Act
REAC	Response, Engineering, and Analytical Contract

RI/FS	Remedial Investigation/Feasibility Study
ROD	Record of Decision
SAPS	Successive alkalinity producing systems
SDWA	Safe Drinking Water Act
START	Superfund Technical Assessment and Response Team
SRC	Syracuse Research Corporation, Inc.
TCLP	Toxicity Characteristic Leachate Procedure
TDS	Total dissolved solids
TMDL	Total Maximum Daily Load
TMG	The McConnell Group
TSS	Total suspended solids
TVS	Table Value Standards
UOS	URS Operating Services, Inc.
USFS	United States Forest Service
USFWS	United States Fish and Wildlife Service
USGS	US Geological Survey
WQS	Water Quality Standards
WTP	Water Treatment Plant

1.0 INTRODUCTION

The URS Operating Services, Inc. (UOS) Superfund Technical Assessment and Response Team 3 (START) was tasked by the U.S. Environmental Protection Agency (EPA) to prepare this Remedial Investigation/Feasibility Study (RI/FS) for the Standard Mine National Priorities List (NPL) site located in Gunnison County near Crested Butte, Colorado. The Standard Mine was historically mined for silver, lead, zinc, and copper. The mine is no longer in operation but still discharges metals-laden water. Site soils contain high levels of arsenic, cadmium, chromium, iron, lead, manganese, and zinc. The Standard Mine site was added to the NPL in August 2005.

The RI/FS was prepared in accordance with the *Guidance for Conducting Remedial Investigations and Feasibility Studies Under CERCLA*, EPA OSWER Directive 9355.3-01 (U.S. Environmental Protection Agency (EPA) 1988) and with the participation of the United States Forest Service (USFS), United States Fish and Wildlife Service (USFWS), U.S. Geological Survey (USGS), Colorado Department of Public Health and Environment (CDPHE), Colorado Division of Wildlife (CDOW), Colorado Division of Reclamation, Mining, and Safety (DRMS), community groups such as the Standard Mine Advisory Group and the Standard Mine Technical Advisory Group, and stakeholders.

1.1 PURPOSE OF REPORT

The purpose of the Feasibility Study (FS) is to identify potential cleanup options and to evaluate these options against the nine criteria specified in the National Contingency Plan (NCP), 40 CFR 300.430(e)(9)(iii). This information can then be used by decisionmakers to select an appropriate remedy.

The FS report includes discussion of the following topics:

- Remedial Action Objectives (RAOs), Applicable or Relevant and Appropriate Requirements (ARARs), and Preliminary Remediation Goals (PRGs);
- Screening of remedial technologies;
- Development and evaluation of remedial alternatives;
- Comparative analysis of remedial alternatives; and
- Preferred alternative.

Because the remediation of the majority of the waste rock and tailings has already been completed, the FS focuses on options for addressing adit discharges and reducing impact from waste rock piles at the higher mine levels.

1.2 SITE BACKGROUND

The following sections summarize the Standard Mine site setting, history, and current site conditions. This section focuses on information most pertinent to the selection and evaluation of potential remedial actions. Additional information is provided in the Remedial Investigation Report (URS Operating Services, Inc. (UOS) 2010).

1.2.1 Site Description

The Standard Mine is located in the Ruby Mining District in the Ruby-Anthracite Range of west central Colorado at an elevation of approximately 10,900 to 11,600 feet above mean sea level. It is approximately thirty miles northwest of Gunnison, Colorado, and five miles west of Crested Butte, Colorado (Figure 1-1). The Standard Mine is within the boundaries of the Gunnison National Forest.

The mine was privately owned and operated and is located on public and private land. The Standard Mine has not been mined since 1966. Approximately ten acres were left disturbed by past mining activities at the site (Figure 1-2). The Standard Mine site includes several discrete areas of mining disturbance: Level 1, Level 2, Level 3, Level 4, Level 5, and Level 98. Levels 1, 2, and 3 were associated with the Standard and Micawber Mines and are interconnected. Level 4 consists of twin waste rock piles and two twin compartment shafts that lead to Level 3. The other levels are not connected.

The mine area drains into Elk Creek, which flows southeast to Coal Creek. Copley Lake discharges into Elk Creek downstream of the site. Coal Creek flows east toward the Town of Crested Butte. The Crested Butte municipal water intake is located on Coal Creek approximately two miles downstream of the confluence with Elk Creek. The Mt. Emmons Project Water Treatment Plant (WTP) discharges into Coal Creek downstream of the Elk Creek/Coal Creek confluence.

1.2.2 Site History

1.2.2.1 Mining History

Mining activity began in the Ruby Mining District in Gunnison County, Colorado, in 1874. There was a modest amount of activity and production beginning in the 1880s though the early 1900s. It wasn't until the 1940s and 1950s that significant development and production took place at the Standard Mine (also known as the Micawber Mine).

Records from the Colorado Bureau of Mines indicate that the Slate River Mining Company (Slate River) began operating the Standard Mine in 1951. Slate River was a Colorado corporation and a subsidiary of Standard Uranium Corporation that was dissolved in 1959. Approximately 100 tons of lead, zinc, copper, silver ore were produced on a monthly basis in 1951 and 1952 and were trucked to Leadville, Colorado, and Salt Lake City, Utah. Standard Uranium Corporation acquired ownership of the mine in 1957 and expanded the facilities, adding a 700-foot drift, an upper tunnel, and a 125-ton flotation mill. Records indicate that in 1960, the mine produced 6,649 tons of lead zinc ore and the mill processed 5,254 tons of ore to produce 304,995 pounds of zinc, 193,420 pounds of lead, and 5,354 ounces of silver. The 1961 Minerals Yearbook (U.S. Bureau of Mines 1962) reports that the Standard Mine was closed in September 1960.

In 1962 the mill was sold and moved to Breckenridge, Colorado, where it was used at the Wellington Mine. Documents from the Colorado Bureau of Mines indicate that in 1963 the Standard Mine was reopened for 31 days by a new operator, Rocky Mountain Mining Company. Sporadic operations continued in 1964, 1965, and 1966 with Shumway & Dade Mining Company and Elk Mountain Mining and Milling Corporation (Elk Mountain) being identified as operators in documents filed with the state. It appears that no further mining or milling activities occurred at the Standard Mine after 1974 (EPA 2009).

1.2.2.2 Regulatory History and Removal Actions

The Standard Mine site was added to the NPL in August 2005 based on elevated concentrations of metals in site soils and in Elk Creek.

EPA's Removal Program conducted a Removal Assessment, Time-Critical Removal Actions, and Non-Time-Critical Removal Actions to stabilize site conditions.

An Action Memorandum dated June 9, 2006, documents the Time-Critical Removal Action at the Standard Mine. The Action Memorandum cited elevated levels of contamination in waste piles and a tailings impoundment at Level 1, erosion of the tailings impoundment, and the potential for a failure of the tailings impoundment that could cause mass loading of metals into Elk Creek and subsequently into Coal Creek and Crested Butte's water supply as cause for Time-Critical Removal Action. Both human health and ecological risks were considered. The Time-Critical Removal Action included access road improvements, surface water controls and sediment catch basins, realignment of Elk Creek, treatment and discharge of water in a tailings impoundment, removal of a blockage at the Level 1 adit opening, and demolition and removal of mine-related structures.

A second Action Memorandum, dated July 10, 2007, documents the Non-Time-Critical Removal Action, including construction of a waste repository, excavation of source waste materials and transport to the repository, and site restoration/re-vegetation. The actions were based on an Engineering Evaluation/Cost Analysis (EE/CA) that was prepared to facilitate selection of removal alternatives for the tailings pond and waste rock (URS Corporation (URS) 2007; URS Operating Services, Inc. (UOS) 2007). After completion of waste removal, the remaining site soils were reclaimed, approximately 1,000 linear feet of Elk Creek in the vicinity of Level 1 was reconfigured to approximate conditions found immediately upstream and downstream of the Standard Mine site, and approximately ½ acre of ecologically functional wetlands were created at the location of the former tailings impoundment.

1.2.3 Current Site Conditions

1.2.3.1 Mine Workings, Adit Discharges, and Mine Waste Piles

The post-removal site conditions are described below.

Level 1

Level 1 currently consists of a draining adit, revegetated upland soils, Elk Creek, wetlands associated with Elk Creek and upgradient seeps, surface water control features, and a pilot scale biochemical reactor (BCR).

The Level 1 adit is approximately 3,200 feet long and is connected to Levels 2 and 3 by intervening raises. The mine workings are shown on Figure 1-3 (Carpenter 1958). There are two intermediate levels between Levels 1 and 2 that total approximately 1,250 feet in length. The Level 1 adit is blocked by what appears to be a substantial roof fall approximately 80 feet in from the portal. The fall blocks the mine from rib to rib and from floor to back. The volume of fall material appears to be substantial, given the nature of the material and dimensions of the plug. The ribs and back are timbered from the portal to the collapse and rail is present on the floor. Water drains from the caved material and can be heard to cascade in from the blockage. Water enters the tunnel from raises that connect Level 1 to Level 2 and intermediate levels. Water may enter

the tunnel from other sources behind the blockage as well, but it is impossible to verify the location of additional sources of water into the Level 1 workings due to the collapse near the portal (Colorado Division of Reclamation, Mining, and Safety (DRMS) 2007). Water flows across the floor of the Level 1 tunnel and discharges from the portal at documented flow rates ranging from approximately 3 to 70 gallons per minute depending on the season. Higher flows may occur but have not been documented. Flows are significantly higher during the peak snowmelt months of May and June than at other times of year.

Most of the waste rock previously located outside the Level 1 portal was taken to an onsite repository during a 2007-2008 Removal Action, leaving some areas with native soil, some areas with exposed bedrock, some areas covered with clean fill from a nearby borrow location, and some areas with residual waste rock. All areas but the bedrock and the area immediately in front of the Level 1 adit and surrounding the pilot scale BCR were treated and seeded in 2008 in accordance with the Reclamation Plan (UOS 2008). In order to minimize the impact of site contaminants and site activities on water quality in Elk Creek, a portion of Elk Creek at Level 1 was realigned and isolated during the Removal Action. After the removal action, approximately 1,000 linear feet of Elk Creek were reconfigured to approximate conditions found immediately upstream and downstream of the Standard Mine site. Approximately 0.5 additional acres of ecologically functional wetlands were created along the 1,000 feet of the reconfigured Elk Creek channel. Ditches were installed to provide surface water run-on/runoff control and reduce the amount of water flowing across site soils.

A pilot-scale BCR is located near the discharging adit. The BCR consists of a buried 40-foot by 40-foot lined reactor containing chipped wood, limestone, sand, bacterial inoculum, hay, and a small quantity of manure buried underneath a layer of wood chips. The treatment system also contains an aerobic polishing cell, a buried Chitorem® reactor, and associated plumbing. The BCR system is described more fully in Section 3.4.1.

Level 2

Level 2 consists of an ephemerally discharging adit and waste rock.

The Level 2 adit is collapsed at the portal. The adit is connected to Level 3 by raises, and to Level 1 by two winzes that also intersect two intermediate sub-levels. The drifts average six feet wide and eight feet high. Timbering is confined to ore chutes and areas of stoping and do not appear to be required for general ground support. Minor and sporadic amounts of roof fall are present along the floor, with the most muck directly correlated to ore chutes or zones of collapsed lagging. Numerous ore chutes are present, many of which still contain sulfide ore. Near the back of the tunnel, a raise down to a sublevel drift is present that is not shown on the cross section. The sublevel descends at least 30 feet. Water enters Level 2 from Level 3 via raises, stopes, and surrounding rock. Approximately 80 percent of the inflow to Level 2 that was observed during the July 2009 underground assessment was from Level 3 and open stopes and timbered areas between Levels 2 and 3. The remaining 20 percent of inflow appeared to be from surrounding rock joints and fractures. During the 2009 entry, approximately 300 feet of the visible portion of the tunnel contained pooled water in excess of one foot. As much as three feet of water was backed up behind a muck pile on the floor of the Level 2 adit outby the first winze to

Level 1. Water exits Level 2 from at least three locations. At the farthest inby raise on Level 2, water just passes through Level 2 as it pours from the Level 3 raise and into the Level 1 winze. Water flowing down the center winze comes from rock formations and ore chutes to the east. Most of the water flowing down the first raise is backflow from the water pooled behind muck piles. The features of the Level 2 adit are mapped on Figure 1-4 provided by DRMS (DRMS 2009).

Waste rock that had been located outside the Level 2 entrance was removed down to bedrock during 2008 and the disturbed soils were reclaimed in the same manner as Level 1. A small amount of non-discrete adit discharge flows over the reclamation area, but the discharge is not channelized or controlled in any manner. Logs and felled trees were placed perpendicular to the flow of the discharge in the area between Levels 1 and 2 in an effort to control erosion during the spring runoff when scouring by the adit discharge is evident.

Level 3

Level 3 consists of an adit that does not discharge and a waste rock pile (Figure 1-2).

The Level 3 portal is open and readily accessible. The historic mine entrance is collapsed immediately inside the entrance but has been reopened at a timber set near the original mine entrance. The portal accesses about 800 feet of workings that connect to Level 2 and ultimately Level 1 by vertical winzes. A raise connects the Level 3 adit to the surface at Level 4. The workings contain ore minerals that are potential sources of water contamination within unmined portions of the fault, within plugged ore chutes, and in muck piles. Water enters the tunnel primarily from the Ohio Creek footwall side of the Standard fault-vein, but also enters the mine from localized conduits along the fault-vein and adjacent damage zone and from the raise to Level 4. Water is on the floor throughout the tunnel, but flow is either non-existent or extremely slow during late summer months. Water flows down the two raises to Level 2 from both sides of each raise, indicating at least some inward and outward flow on the tunnel floor toward the raises (DRMS 2007; U.S. Geological Survey (USGS) 2007). The features of the Level 3 adit are mapped on Figure 1-5 provided by DRMS (DRMS 2007).

The bulk of the waste rock located outside the Level 3 portal was excavated and taken to the on-site repository during the Removal Action, but steep slopes prevented removal of the remaining waste rock. Approximately 0.1 acre of waste rock remains. Disturbed soils and the remaining waste rock were revegetated during 2008.

Level 4

Level 4 consists of two partially collapsed twin compartment shafts that communicate with Level 3. Small waste rock piles are associated with these shafts.

Level 5

Level 5 consists of a discharging adit and waste rock.

The Level 5 tunnel is readily accessible and discharges acid rock drainage continuously throughout the year. The Level 5 adit includes about 800 feet of workings and is not connected to the other levels. Water is accumulated on the floor throughout the tunnel and flows slowly toward the portal. A small sill of colluvial material acts as a dam for water accumulated within the drift. The adit discharge flows over the waste rock across a road and into a flourishing high alpine wetland. The features of the Level 5 adit are mapped on Figure 1-6 provided by DRMS (DRMS 2007).

The waste rock pile is steep and consists of two characteristically different waste rock types, one dominated by orange and tan materials that exhibit low paste pH values and the other dominated by gray materials with higher paste pH.

Level 98

Level 98 consists of a lightly discharging adit and waste rock (Figure 1-2).

The adit discharges small flows over the waste rock and into a flourishing high alpine wetland.

The waste rock pile at Level 98 consists of boulder-sized materials interspersed with fines. Revegetation test plots were installed on the Level 98 waste rock pile during 2007. A tributary to Elk Creek flows past the toe of the waste rock pile.

1.2.3.2 Groundwater Flow and Chemistry

Groundwater Flow

Simple topography appears to be the primary control on the occurrence and flow of shallow groundwater (USGS 2007). The location of the low porosity and permeability Wasatch formation and the higher porosity and permeability Ohio Creek formation along either side of the relatively low-permeability standard fault vein likely controls the occurrence and flow of groundwater in the vicinity of the fault-vein and in the mine workings. The fault-vein appears to act as an asymmetric, combined conduit-barrier to groundwater flow, and groundwater likely flows from the surface to the mine workings within joint networks distributed throughout the sedimentary bedrock in the Upper Elk Basin. Groundwater that intersects the Standard fault-vein is likely impeded from crossing the fault but may flow along the fault before discharging into the mine. Another source of water entering the mine is deeper groundwater flow potentially rapidly transported through joint networks from the sedimentary bedrock in the Upper Elk Basin. Based on observations from within the Level 3 and Level 5 tunnels, groundwater flows into these levels primarily on the Ohio Creek Formation side of the Standard fault-vein and the Wasatch Formation side conducts minimal flow. Once within the workings, water freely flows from higher to lower levels via raises and stopes to ultimately discharge at the various mine portals (DRMS 2007; DRMS 2009; USGS 2007; USGS 2010a).

Both shallow and deep groundwater levels experience seasonal variations, primarily associated with spring snowmelt. Water levels rise quickly in April, stay elevated through the beginning of June, and begin to trail off into August.

Shallow groundwater also experiences smaller short-term fluctuations from rainstorms or snow that melts rapidly.

Groundwater Quality

Investigation of site-wide water quality shows low pH and elevated concentrations of cadmium, copper, lead, manganese, and zinc within or immediately downgradient of areas where sulfides are abundant, including the Standard fault and the Elk Lode fault. Concentrations of these metals are lower and pH values are circumneutral at surrounding locations away from the fault. These observations suggest that sulfide-rich mineralized rock is the primary control on dissolved metal concentrations and pH in ground water in the Standard Mine vicinity (USGS 2007). Deep groundwater in the Wasatch Formation contains low levels of metals. Shallow groundwater on the Ohio Creek formation side of the Standard fault uphill of the Level 3 workings contains elevated metal concentrations.

Groundwater quality degrades as water flows through the Standard Mine workings. Water within the Level 3 and Level 5 adits contained higher metal concentrations than measured at aboveground sites located outside of sulfide-rich areas. Water within the Level 2 adit contains highly elevated metal concentrations relative to water within the Level 3 adit and similar concentrations to the Level 1 adit discharge, suggesting that water-rock interaction between Level 3 and Level 1 accounts for the elevated concentrations of metals in the Level 1 adit discharge. Ore minerals present within the mine in unmined portions of the vein system, within plugged ore chutes, and in muck piles are sources of the metal contaminants (USGS 2007; USGS 2009).

Seasonal groundwater variations may impact the transport of metals within the groundwater system. A spring flush in which pH drops and some metal concentrations rise at the onset of spring runoff was observed in Elk Creek. The source of the high metal concentrations was probably within a shallow portion of the groundwater flow system or within the mine workings themselves. Reasonable candidate locations include pockets of high capillarity material (fine-grained fault gauge or intensely microfractured rock) within the seasonally saturated zone (unsaturated in the winter, saturated in spring) near the ground surface or within portions of the mine workings that only become saturated during spring high flows (USGS 2007).

Groundwater downgradient of the site has not been sampled, but there is no indication that contaminated groundwater is present to the degree that would impact the regional groundwater quality or downstream surface water quality

1.2.3.3 Surface Water Quality and Sediment

Surface water and sediment contain elevated concentrations of site contaminants, even after the Removal Action. Elk Creek metal concentrations were lower during 2008 and 2009 than years before and during the Removal Action.

Water quality is impaired at the most upstream sample location in Elk Creek, located immediately upstream of Level 1. Even though this location is upstream of the most contaminated portion of the site, the cadmium, lead (spring only), and zinc concentrations are greater than the chronic water quality standards (WQS).

Cadmium concentrations approach or exceed the acute WQS during the fall, and zinc concentrations exceed the acute WQS at all times of the year. There is no pure "background" sample location for Elk Creek because Elk Creek forms below Levels 5 and 98, and is therefore likely that groundwater is impacted by contamination from these areas even at the headwaters.

Metal concentrations increase significantly where Level 1 adit discharge enters Elk Creek and generally decrease slowly down to the confluence with Coal Creek. The pH decreases in Elk Creek where the adit discharge enters Elk Creek but quickly recovers to neutral at downstream locations. At Elk-08, located approximately 0.8 miles downstream of Level 1, cadmium, copper, lead (spring only), and zinc concentrations exceed the chronic WQS. Cadmium and zinc concentrations also exceed the acute WQS. In Elk Creek immediately above the confluence with Coal Creek, the cadmium and zinc concentrations exceed the acute and chronic WQS, but the concentrations are much lower than those observed at Elk-08.

Cadmium, manganese, and zinc concentrations are typically higher in Elk Creek during September than during June. The reverse is true for copper and lead. The pH of the Level 1 adit discharge is much lower during June than during September but the pH in Elk Creek stays relatively constant throughout the year.

Metal concentrations are generally low in Coal Creek upstream of the Elk Creek confluence and increase immediately downstream of the confluence. Since the Removal Action, none of metal concentrations measured in Coal Creek immediately downstream of the Elk Creek confluence exceeded the Coal Creek WQS with the exception of cadmium where concentrations approach or slightly exceed the chronic standard. Other sources of metal contaminants located downstream of the Elk Creek confluence, including an iron gossan and fen and the Mt. Emmons Project WTP, cause increases in Coal Creek metal concentrations downstream of the Elk Creek confluence.

Sediment metal concentrations are elevated throughout the length of Elk Creek and have not decreased significantly since the Removal Action. Sediment concentrations within Coal Creek are less than those found in Elk Creek. Overall presence of bulk sediment in both Elk Creek and Coal Creek is low.

1.2.4 Conceptual Site Model

The primary source of contamination from the Standard Mine is sulfide minerals in the mine workings and waste rock that release metal contaminants during sulfide oxidation.

Snowmelt and rain infiltrate the ground surface and enter the shallow and deep groundwater system. Groundwater enters the mine workings primarily from fractures in the Ohio Creek formation and to a lesser degree from localized fractures and breccia zones within the fault-vein. Little water has been observed entering the mine workings from the Wasatch Formation.

The bulk of the site mining occurred at the Standard and Micawber Mines and is associated with Levels 1, 2, and 3. Water enters this system as described above and can also enter the mine from the Level 4 shafts. Once in the mine, water accumulates metals as it flows over sulfide minerals present on the floors, ribs and backs of the tunnels.

Water in Level 3 flows to Level 2 through open stopes, raises, and filled ore chutes where it is believed that the most significant mobilization of metals occurs. Additional water enters Level 2 from the Ohio Creek Formation and the fault-vein system. Water flows through muck on the floor of Level 2. The water pooled up behind debris in Level 2 compounds loading by providing additional residence time for leaching of metals before the water is discharged via winzes to Level 1. Water is discharged at the Level 1 portal and flows into Elk Creek where it transports contaminants downstream in particulate or dissolved form. A portion of the water in the mine workings may enter the local groundwater system.

The Level 5 and Level 98 mine workings are not connected with Levels 1, 2, 3, or 4 or with each other. Water enters these tunnels from the surrounding rock and accumulates metals as it flows over sulfide minerals in the tunnels. A blockage within Level 5 may contribute to loading by pooling water and providing additional residence time for leaching of metals into the water. Water is discharged from the respective portals and flows over the waste rock prior to entering wetlands immediately downhill from the waste rock. Contaminants in the water may contribute to elevated metal concentrations at the Elk-29 sampling station.

Surface water, groundwater, and adit discharge water that flows over and through waste rock mobilizes contaminants as the water reacts with minerals. Dissolved and particulate metals are transported to downgradient locations. Some attenuation of metal contaminants occurs in the groundwater system and in Elk Creek and downstream waters. Level 5 and Level 98 waste rock piles are uncontrolled and adit discharges still flow over waste rock prior to flowing into downgradient streams and wetlands, providing an ongoing source of contaminant loading to Elk Creek.

Site contaminants are released to the environment where they can affect human and ecological receptors.

1.2.5 Risk Assessment Summary

The Baseline Human Health Risk Assessment (BHHRA) as amended by the BHHRA Addendum (Syracuse Research Corporation, Inc. (SRC) 2008a; SRC 2009) concluded that risks to humans that visit the Standard Mine site and site drainages are below acceptable risk thresholds, therefore no further cleanup actions to address human health risks are warranted. The conclusion was based on post-Removal Action site conditions.

The Baseline Ecological Risk Assessment (BERA) as amended by the BERA Addendum (SRC 2008b; SRC 2010) concluded the following.

- Mining-related releases from Standard Mine into surface water are substantially toxic to fish in Elk Creek, primarily due to elevated concentrations of cadmium, lead, and zinc. Actions taken by EPA at the Standard Mine Superfund Site have been effective in decreasing risks to fish in Elk Creek, but risk still remains and is significant in the upper reaches of Elk Creek. The lower reaches of the stream are presently occupied by fish, but the upper reaches are not. This may be the result of waterfalls that block upstream migration, low flow of the stream in the upper reaches, and cold water temperature.

- Water discharged from Elk Creek into Coal Creek elevates concentrations of metals in Coal Creek but this appears to have only minimal to moderate toxicity on fish.

- Sediments in Elk Creek are likely to have significant adverse effects on benthic organisms residing in the sediment, especially in the upper reaches of Elk Creek. Sediment quality in Elk Creek appears to be improving only slowly, and risks to benthic macroinvertebrates in Elk Creek remain above a level of concern, especially at upstream stations closest to the site.

- Hazards to benthic organisms from site sediments are lower and of lesser concern in Coal Creek.

- Plants and soil invertebrates may be impacted by metals levels in soil, but this conclusion is uncertain because of uncertainty in the toxicity values. In addition, data on background concentrations were too limited to draw firm conclusions as to whether some metals might be at background levels or not. Removal actions taken by EPA have decreased the level of mine waste contamination in localized areas, and this has decreased predicted risk to plants and soil invertebrates in these areas; however, soil concentrations in the area remain higher than background. Additional studies would be needed to determine if significant effects are actually occurring.

- Risk to many wildlife receptors from site-related contaminants was likely to be minimal. Wildlife receptors with an assumed high soil intake may be at risk due to high soil intake; however, calculations of exposure require a number of assumptions and approximations, so risks to birds and mammals should be interpreted with caution.

1.3 REPORT ORGANIZATION

The Feasibility Study Report includes a summary of the RI (Section 1), RAOs, Applicable or Relevant and Appropriate Requirements, and PRGs (Section 2), identification and screening of technologies to meet the remedial action objectives (Section 3), development and screening of alternatives (Section 4), detailed analysis of alternatives (Section 5), comparative analysis of alternatives and a description of a phased approach for the remedial action (Section 6), and the proposed preferred alternative (Section 7). A description of treatability studies is included in Section 3.4.

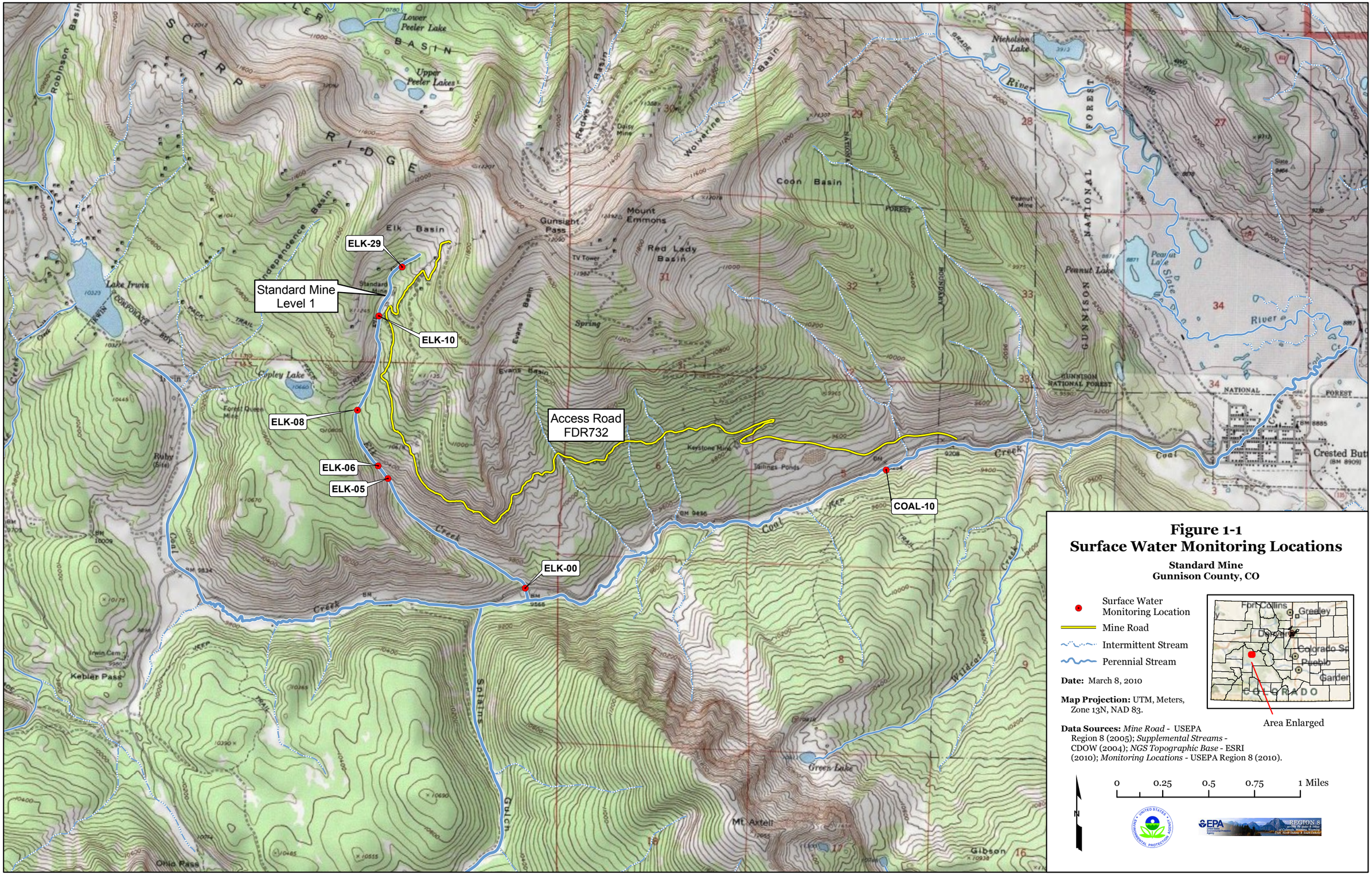
ELK-29
Standard Mine
Level 1
ELK-10
ELK-08
ELK-06
ELK-05
ELK-00
COAL-10
Access Road
FDR732
Elk Basin
Coon Basin
Red Lady Basin
Mount Emmons
Gunsight Pass
Lower Peeler Lake
Upper Peeler Lakes
Lake Irwin
Copley Lake
Nicholson Lake
Peanut Lake
Green Lake
Mt. Axtell
Kebler Pass
Ohio Pass
Crested Butte
Coal Creek
Slate River
GUNNISON NATIONAL FOREST
Figure 1-1
Surface Water Monitoring Locations
Standard Mine
Gunnison County, CO
Surface Water Monitoring Location
Mine Road
Intermittent Stream
Perennial Stream
Date: March 8, 2010
Map Projection: UTM, Meters, Zone 13N, NAD 83.
Data Sources: Mine Road - USEPA Region 8 (2005); Supplemental Streams - CDOW (2004); NGS Topographic Base - ESRI (2010); Monitoring Locations - USEPA Region 8 (2010).
Fort Collins
Greeley
Denver
Colorado Sp
Pueblo
Garden
COLORADO
Area Enlarged
0
0.25
0.5
0.75
1 Miles
N

Created: 1/29/2009 12:32:07 PM Drawn By:andrew_longworth
File Location: T:\START3\Standard_Mine\GIS\Projects\RIFS_09\Figure2_MapOfSM.mxd

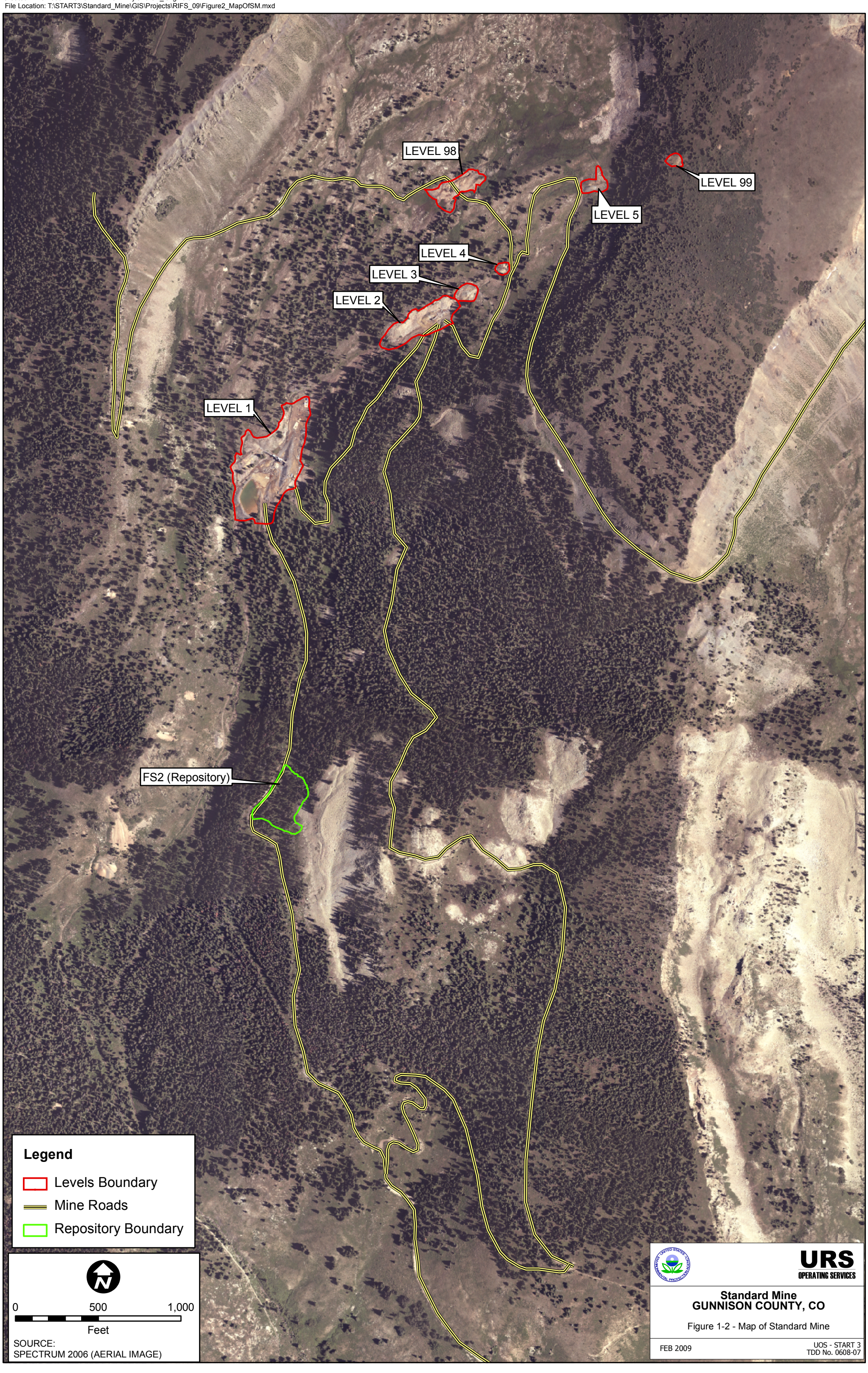

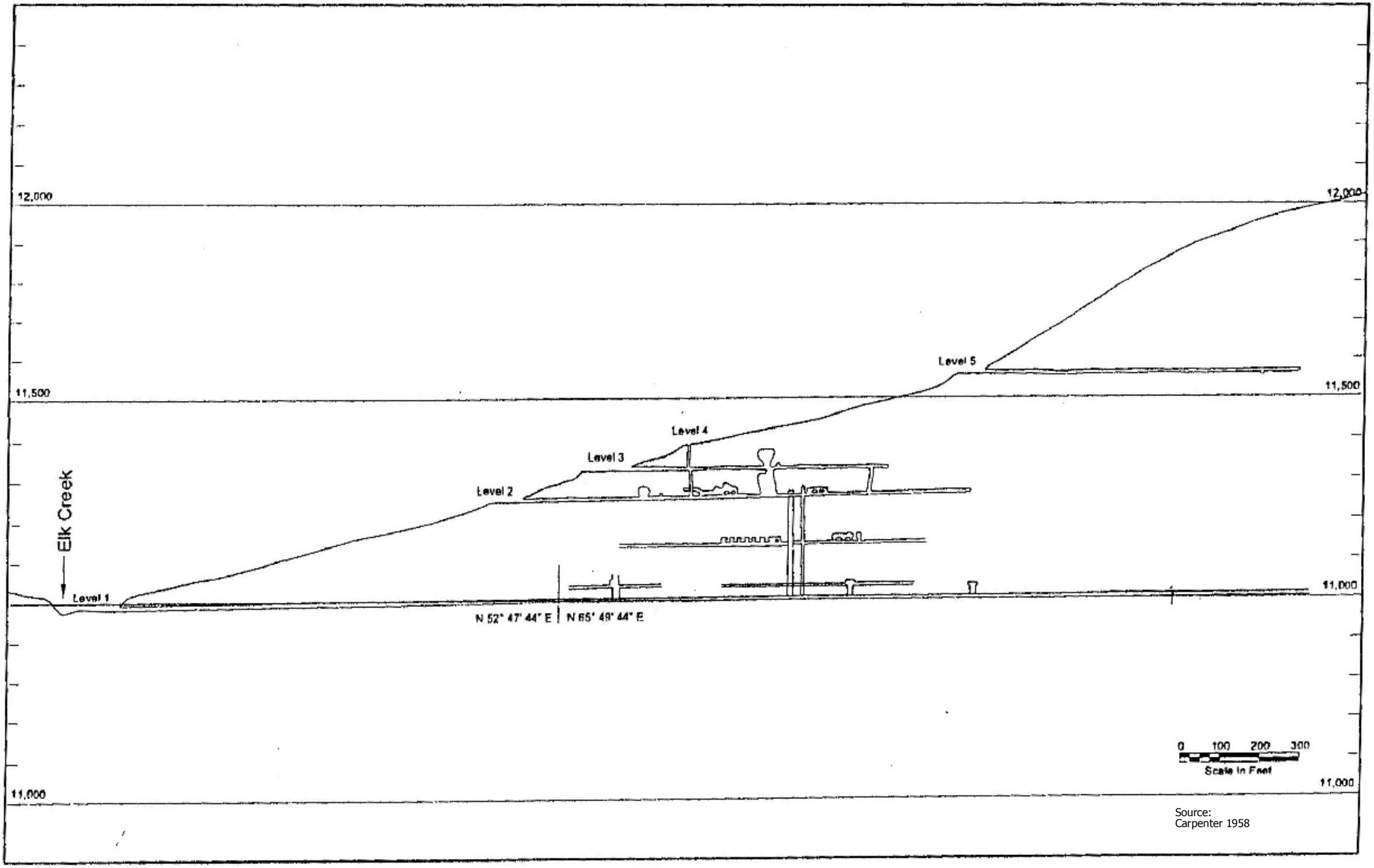

Source:
Carpenter 1958

URS
OPERATING SERVICES

STANDARD MINE
GUNNISON COUNTY, CO

Figure 1-3: Standard Mine Workings Cross Section

Feburary 2009

UOS - START 3
TDD No. 0608 -07

Standard Mine Level 2

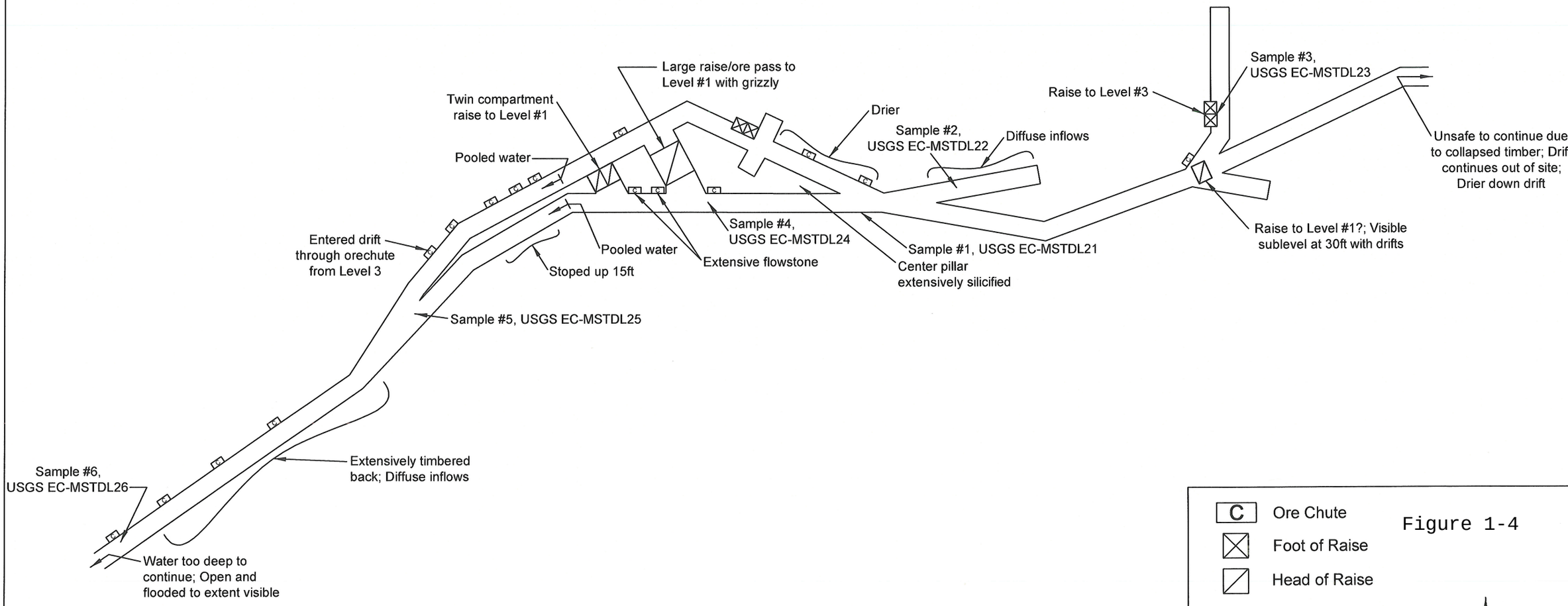

C Ore Chute

Foot of Raise

Head of Raise

Figure 1-4

0' 25' 50'

N

COLORADO DIVISION OF RECLAMATION MINING & SAFETY

Mapped by Jeff Graves and Al Amundson

LEVEL 3 STANDARD MINE

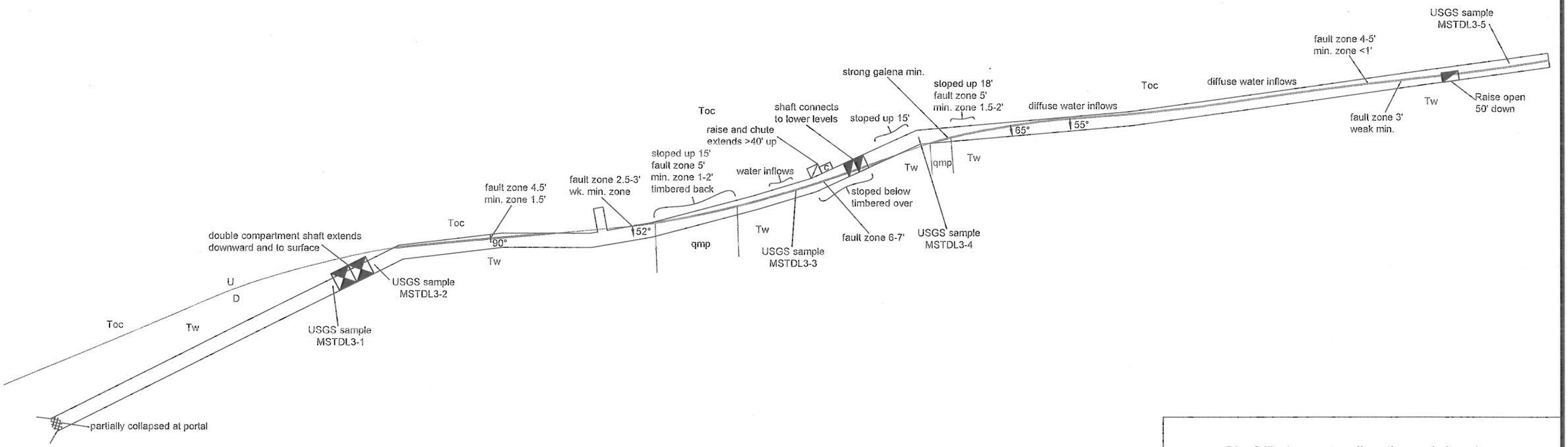

N

Mapped by Jeff Graves and Steve Renner
Colorado Division of Reclamation, Mining and Safety
August, 2006

0' 50' 100'

- Shaft/Raise extending through level
- Head of raise
- Foot of raise
- C Ore chute
- U/D Fault - U, upthrown side; D, downthrown side
- 50° Fault dip - direction and magnitude
- qmp Quartz Monzonite Porphyry
- Toc Ohio Creek Formation
- Tw Wasatch Formation

Figure 1-5

LEVEL 5 STANDARD MINE

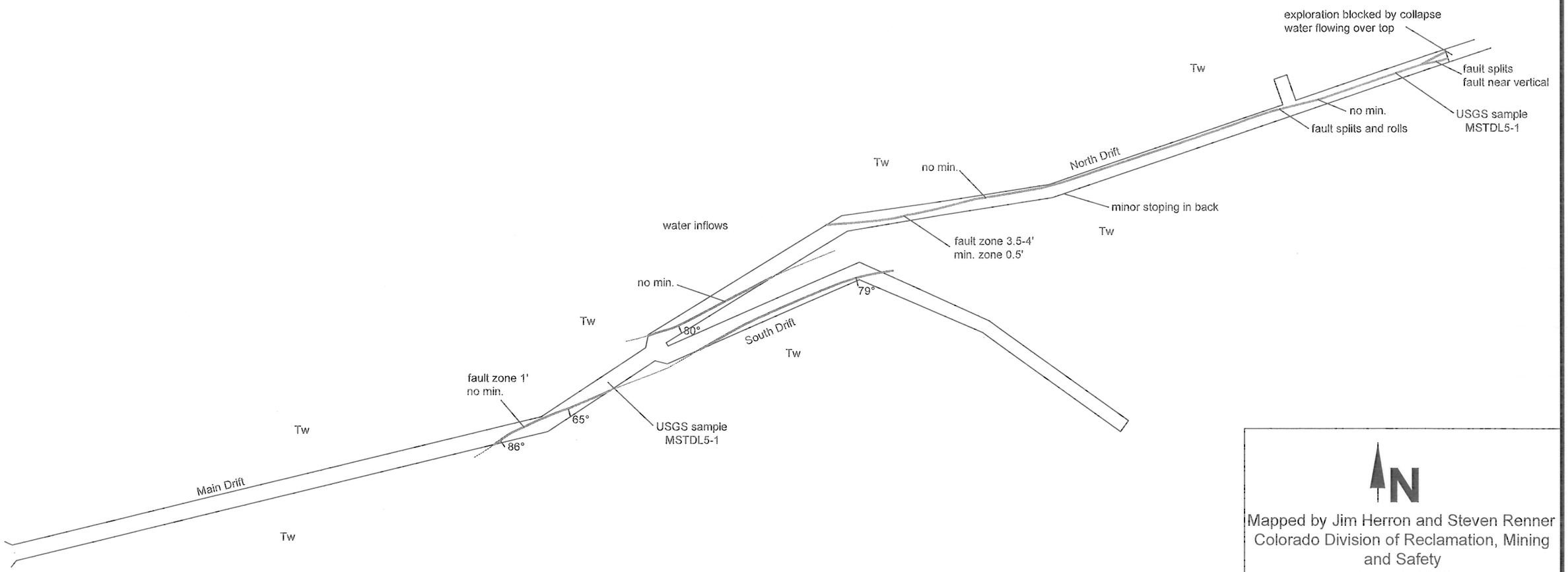

N

Mapped by Jim Herron and Steven Renner
Colorado Division of Reclamation, Mining and Safety
August, 2006

0' 50' 100'

50° Fault- dip direction and magnitude indicated

Tw Wasatch Formation

Figure 1-6

2.0 REMEDIAL ACTION OBJECTIVES, POTENTIALLY APPLICABLE OR RELEVANT AND APPROPRIATE REQUIREMENTS, AND PRELIMINARY REMEDIATION GOALS

This section provides preliminary remedial action objectives (RAOs), applicable or relevant and appropriate requirements (ARARs), and preliminary remediation goals (PRGs). RAOs provide a general description of what the remedial action should accomplish. ARARs are regulatory requirements that must be considered in development of remedial actions. PRGs are numeric values that the cleanup is intended to achieve.

2.1 REMOVAL ACTION OBJECTIVES

The following Removal Action Objectives were developed to guide EPA's Removal Program efforts at the Standard Mine site (UOS 2007).

1. Reduce human and ecological exposure to metals by reducing metals loading from site soils and waters to Elk Creek and downstream waters.

2. Control discharge of low pH and/or metal contaminated waters from site runoff to Elk Creek and downstream waters.

3. Reduce exposure of wildlife to metals in soil and vegetation at toxic concentrations via direct exposure and/or bioaccumulation.

2.2 REMEDIAL ACTION OBJECTIVES

The RAO's presented below are focused on objectives for Remedial Actions that may be performed to address site conditions present after completion of the Removal Action. The RAOs were developed by EPA, USFS, and CDPHE to address surface water, soils, and groundwater.

Surface Water RAOs

1. Reduce in-stream metal concentrations and sediment loading to the extent practicable in Elk Creek to lessen water quality impacts and maximize reasonably attainable water uses in Elk Creek.
2. Reduce in-stream metal concentrations and sediment loading to the extent practicable in Coal Creek to lessen water quality impacts and maximize reasonably attainable water uses in Coal Creek.
3. Ensure that in-stream metal concentrations attributable to contamination from Elk Creek do not exceed drinking water standards at Crested Butte's drinking water intake on Coal Creek.

Soil and Waste Rock/Tailings RAOs

1. Control and/or reduce run-on and runoff from tailings/waste rock piles to minimize generation of contaminated runoff and groundwater and to reduce sediment loading of streams.
2. Reduce human exposure to dust and ecological impacts from impacted soils and waste rock by maintaining the vegetative cover over treated soils and waste rock.

Ground Water RAO

1. Reduce water flow through mine workings and contaminated soils to reduce metal loading to Elk Creek.

2.3 POTENTIALLY APPLICABLE OR RELEVANT AND APPROPRIATE REQUIREMENTS (ARARs)

The NCP requires that for all EPA remedial actions, the selected remedy must attain or exceed the ARARs in environmental and public health laws. It requires remedial actions to attain ARARs unless one of six waivers is invoked. The six waivers are as follows.

1. The remedial action is only part of a total remedial action and the final remedy will attain the ARAR.
2. Compliance with the ARAR will result in a greater risk to human health and the environment than alternative options.
3. Compliance with the ARAR is technically impractical from an engineering perspective.
4. An alternative remedial action will attain an equivalent standard of performance through the use of another method or approach.
5. The ARAR is a state requirement that the state has not consistently applied in similar circumstances.
6. For Superfund financed remedial action, compliance with the ARAR will not provide a balance between protecting human health and the environment and the availability of Superfund money for actions at other facilities.

Identification of ARARs is done on a site-specific basis and involves a two-pronged analysis: first, a determination whether a given requirement is applicable and second, if it is not applicable, whether it is both relevant and appropriate. The distinction between applicable and relevant and appropriate is critical to understanding the constraints imposed on remedial alternatives by environmental regulations other than the Comprehensive Environmental Response, Compensation, and Liability Act of 1980 (CERCLA). Applicable requirements are standards or requirements or limitations that specifically address a situation present at the site and would be legally required if the remedial actions were not taken under CERCLA. Relevant and appropriate requirements are those standards that while not “applicable”, address problems or situations sufficiently similar to those encountered at the site that their use is well suited to the particular site. Standards must be both “relevant” and “appropriate” to be applied at the site. In addition to ARARs, the NCP provides a list of federal nonpromulgated criteria, advisories and guidance, and state standards “to be considered”.

ARARs may be chemical specific, location specific, and action specific. Chemical specific ARARs are limitations on the amount or concentration of a chemical that is allowable in environmental media, for example water quality standards. Action specific requirements are limitations based on a type of activity, for example discharging water from a water treatment system. Location specific ARARS are restrictions based on where an activity is conducted, for example construction within wetlands.

State standards that are identified by the state and are more stringent than federal requirements may be applicable. State requirements are considered more stringent than federal requirements if the state program has federal authorization and the state requirements are more stringent than federal requirements.

This section lists ARARs that were identified by EPA and the State of Colorado. A summary of the potential ARARs with citations to the laws and regulations is presented in Table 2-1. Other regulations not related to environmental and public health laws, such as Occupational Safety and Health Administration (OSHA) regulations, must also be followed during remedial actions. In addition to ARARs, EPA and the state also identified other advisories, criteria, and guidance “to be considered” (TBC) in selecting and implementing the remedy.

2.3.1 Groundwater

The Colorado Ground Water Standards regulation (5 Colorado Code of Regulations (CCR) 1002-8) protects existing and potential beneficial uses of designated groundwater resources, establishes a scheme for identifying specific areas for classification, and provides numeric standards.

The Colorado Basic Standards for Groundwater regulation (5 CCR 1002-41) describes protection of groundwater of the state of Colorado. The Colorado Ground Water Standards provide for classification of groundwaters and the adoption of water quality standards to protect existing and potential beneficial uses of groundwater. The five classes of groundwater are identified as domestic use quality, agricultural use quality, surface water quality protection, potentially usable quality, and limited use quality. A classification has not been assigned to groundwater in the vicinity of the Standard Mine; therefore, the Interim Narrative Standard applies in accordance with 5 CCR 1002-41.5(C)(6). The Interim Narrative Standard states that groundwater quality shall be maintained to the less restrictive of the following: a.) existing ambient quality as of January 31, 1994, or b.) that quality which meets the most stringent criteria set forth in Tables 1 through 4 of the regulation. Tables 1 through 4 provide standards for domestic and agricultural use classifications as well as standards for total dissolved solids. Agencies with authority to implement the Interim Narrative Standard are to use best professional judgment to identify the existing ambient groundwater quality as of January 31, 1994.

Colorado groundwater protection standards related to hazardous waste are provided in 6 CCR 1007-3.

2.3.2 Surface Water

The **Clean Water Act** regulates water quality in the United States and provides water quality-based and technology-based controls on the discharge of pollutants. The federal government developed water quality criteria and has updated the criteria periodically. States then develop standards which are approved by EPA. Federal water quality criteria would be applicable in the absence of current, segment-specific state water quality standards. The Clean Water Act is applicable to the Standard Mine site and is implemented under the Colorado Water Quality Control Act. State water quality standards are applicable in place of federal criteria.

Section 303(d) of the Clean Water Act requires states to identify water bodies that are not attaining their designated uses or assigned water quality standards. Elk Creek and Coal Creek from Elk Creek to the Crested Butte water supply intake is listed on the State 303(d) list (5 CCR 1002-93, last updated April 30, 2008) as a high priority water body due to impacts from cadmium, lead, and zinc. When Total Maximum Daily Loads (TMDLs) are established for cadmium, lead and zinc in this water body, the TMDLs will be applicable if the remedy involves a point source discharge to Elk Creek and could be relevant and appropriate if the remedy involves a non-point source discharge.

Colorado Water Quality Regulations, 5 CCR 1002, are promulgated by Colorado's Water Quality Control Commission (WQCC) and guide water quality regulation within the state. These standards are applicable to water discharges to Elk Creek.

Regulation 31 establishes *basic* water quality standards that apply to all surface waters of the state as well as *numeric* standards for protection of waters with specific use designations. Table Value Standards (TVS) are a subset of numeric standards and are based on federal water quality criteria adjusted to protect the beneficial uses of Colorado waters. The TVS are default criteria for numeric standards, but different standards may be applied to specific stream segments if adopted by the WQCC through an administrative rulemaking proceeding. For impacted waters where pollutant concentrations exceed TVS values but the beneficial uses are adequately protected, ambient quality-based standards may be adopted. Where classified uses are not being protected and a use attainability analysis has found non-attainability, site-specific criteria-based standards may be developed. Finally temporary modifications to numeric standards may be adopted when a numeric standard is not being met at the present time or there is significant uncertainty regarding the appropriate long-term underlying standard.

Regulation 35 describes the classifications and numeric standards for the Gunnison and Lower Dolores River Basins and was last updated in July 2007. Gunnison River Basin Stream Segment 11 includes the mainstem of Coal Creek from a point immediately above the confluence with Elk Creek to a point immediately below the Crested Butte Water Supply intake, and includes Elk Creek and its tributaries and wetlands from its source to its confluence with Coal Creek. Segment 11 is currently classified for the following uses: Class 1 Cold Water Aquatic Life, Recreation E, Water Supply, and Agriculture. At the present time, there are no temporary modifications to the Segment 11 standards. Segment 12, which is located on Coal Creek immediately downstream of Segment 11, has temporary modifications for cadmium (chronic standard = 2.3 micrograms per liter (µg/L)) and zinc (chronic standard = 518 µg/L). The temporary modifications expire on December 31, 2011. State water quality standards for Stream Segment 11 are provided in Table 2-2. Some of the standards are hardness-based and are to be calculated at the lower 95th percent confidence limit of the mean hardness value at the periodic low flow criteria. Table 2-2 presents the standards as calculated at hardness values of 65 mg/L as $CaCO_3$, 100 mg/L, and 160 mg/L. The hardness value of 65 mg/L was used to reflect the hardness observed in the EPA monitoring stations in Elk Creek between 2005 and 2008. The hardness value of 100 represents a higher hardness that may be expected in Elk Creek after implementation of a PTS or other treatment system. The 2009 data indicate that hardness in Elk Creek may have increased significantly due to the Removal Action. If the increased hardness continues, a hardness of 100 mg/L may be a more appropriate value for calculating WQS. The hardness of 160 mg/L is representative of adit discharge hardness.

Regulation 61 describes the permits required for discharge from a point source into waters of the state. The Colorado Discharge Permit System (CDPS), the Colorado version of National Pollutant Discharge Elimination System (NPDES) permitting, is applicable to alternatives that include water treatment or other point source water discharges. Best Available Technology-based effluent limits may be considered relevant and appropriate to point source discharges from the site. For CERCLA actions performed entirely on site, permits are not required but the substantive requirements of a permit are applicable. Regulation 61 also applies to runoff from construction activities at the site if greater than 5 acres of land will be disturbed. If construction is performed independent of CERCLA and may impact a minimum of 5 acres of land, the stormwater portion of Regulation 61 is applicable and the substantive requirements of an NPDES Stormwater Permit will be applicable. Best management practices regarding stormwater runoff should be used during construction.

Regulation 62 sets technology-based effluent limitations for point source discharges.

2.3.3 Drinking Water

The Safe Drinking Water Act (SDWA) provides for establishment of primary and secondary drinking water regulations. Primary drinking water regulations establish maximum contaminant levels (MCLs) and maximum contaminant level goals (MCLGs) for use in waters intended for human consumption. Secondary Drinking Water Regulations establish non-enforceable guidelines, including secondary maximum contaminant levels and maximum contaminant level goals. The regulations are delegated to the authorized states, including Colorado.

Colorado regulates drinking water under 5 CCR 1003.

2.3.4 Wetlands and Floodplains

Section 404 of the Clean Water Act regulates the discharge of dredged or fill material to the waters of the United States. No discharge of dredged or fill material is permitted if there is a practicable alternative to the proposed discharge that does not have other significant adverse environmental effects. The regulation is applicable to remedial actions that may impact wetlands at or adjacent to the site. For a CERCLA action conducted entirely on site, a permit is not required, but the substantive requirements of the permit must be met.

Protection of Floodplains and Wetlands is addressed in Executive Order Numbers 11988 and 11990 per 40 CFR Section 6.302. Federal agencies must evaluate the potential adverse effects of proposed actions on floodplains and wetlands, respectively. The site contains natural and constructed wetlands. Floodplains and wetlands potentially subjected to adverse impacts from site remedial actions will be inventoried and considered during the analysis, selection, and implementation of the selected cleanup action.

2.3.5 Solid and Hazardous Waste Management

The Resource Conservation and Recovery Act (RCRA) provisions are found in federal regulation 40 CFR Parts 239 – 259 (solid waste) and 260 – 299 (hazardous waste). The state RCRA solid and hazardous waste regulations are codified at 6 CCR 1007-2 and 1007-3, respectively. State and federal hazardous waste regulation numeric citations (i.e., CFR and CCR) “Parts” are identical. Colorado has an authorized state program; therefore, state regulations would be applicable to actions that fall under this Act. Parts 261 and 262 determine whether materials are hazardous waste. Treatment byproducts, such as sludges, may be characteristic hazardous waste by the toxicity characteristic. The Bevill exclusion is an amendment to RCRA that excludes “solid waste from the extraction, beneficiation, and processing of ores and minerals” from regulation as hazardous waste under Subtitle C of RCRA. Sludges generated from mine discharge treatment have been interpreted to be Bevill exempt; therefore, if mine water treatment sludge fails the toxicity characteristic, it could be treated so that the waste passes the toxicity characteristic and disposed as solid waste. Solid waste regulations are applicable and hazardous waste regulations are relevant and appropriate if tested sludge or other treatment byproducts are not hazardous.

The Colorado Solid Waste Disposal Regulations in 6 CCR 1007-2 are applicable if sludge from water treatment operations is disposed of off-site.

The Colorado Biosolids Regulations in 5 CCR 1002-64 would be applicable if uncomposted biosolids are used as soil amendments at the site.

2.3.6 Air

Air quality standards have been established under the Federal Clean Air Act and are enforced by the State of Colorado in accordance with the Colorado Air Pollution Prevention and Control Act. Ambient air quality standards are not ARARS at the site since it is not a major source of air pollution. The regulation provides particulate control requirements that are applicable for various construction activities. If construction is performed under CERCLA, a permit would not be required; however, control measures to minimize dust and air monitoring must be implemented as needed during construction. The regulation provides odor control requirements that would apply to installation of a system that generates odors.

2.3.7 Soil and Sediment

The CDPHE Proposed Soil Remediation Objectives Policy Document proposes guidance in establishing soil cleanup standards. This document is TBC in development of a remedial alternative.

The Provisional Implementation Guidance for Determining Sediment Deposition Impacts to Aquatic Life in Streams and Rivers provides guidance for assessing impacts to aquatic life and habitat conditions caused by human induced erosion and deposition of materials in aquatic systems. This document is TBC in development of a remedial alternative.

2.3.8 Mining Reclamation

Colorado Mined Land Reclamation regulations require reclamation of mined areas. The regulation applies to mining companies; however, requirements for preservation of water quantity and quality and concern for the safety and protection of wildlife are relevant and appropriate.

The Colorado Noxious Weed Act and associate regulations provide a list of noxious weeds by location and address management of noxious weeds.

2.3.9 Environmental Covenants

Colorado requires environmental covenants when remediation results in residual contamination levels that are above what a regulatory agency determines is not safe for all uses or where remediation incorporates any engineered feature or structure or requires any monitoring, maintenance, or operation.

2.3.10 Fish and Wildlife

The Fish and Wildlife Coordination Act serves to protect fish and wildlife when federal actions result in the control or structural modification to natural streams or water bodies. Agencies must develop measures to prevent, mitigate, or compensate for project related losses of fish and wildlife. This regulation is applicable for impacts to natural streams or water bodies and is relevant and appropriate for impacts to other waters.

Regulations under the Federal Endangered Species Act and Colorado Non-game, Endangered and Threatened Species Act require that remedial actions not jeopardize the

continued existence of any federal- or state-listed threatened or endangered species or impact critical habitat. The Colorado Wildlife Enforcement and Penalties Act (CRS 33-2-101 to 130) prohibits actions detrimental to wildlife and establishes provisions governing the taking, possession, hunting, and use of wildlife and migratory birds. Colorado Wildlife Commission Regulations establish specific requirements for protection of wildlife.

The Migratory Bird Treaty Act requires continued consultation with the U.S. Fish and Wildlife Service during remedial design and remedial construction to ensure that cleanup does not unnecessarily impact migratory birds. This is applicable to federal actions at the site.

The Bald Eagle Protection Act requires continued consultation with the U.S. Fish and Wildlife Service during remedial design and remedial construction to ensure that cleanup does not unnecessarily impact bald and golden eagles. This is applicable to federal actions at the site.

2.3.11 Historic Properties, Landmarks, and Natural Areas

The Colorado Natural Areas Act, CRS 33-33-104 mandates a list of plant species of special concern for the state and regulates species within a formally designated "natural area".

The National Historic Sites, Building and Antiquities Act requires federal agencies to consider the existence and location of landmarks on the National Registry of Natural Landmarks and avoid adverse impacts on those landmarks.

The Archaeological and Historic Preservation Act of 1974 established procedures to preserve historical and archaeological data that might be destroyed through alteration of terrain as a result of federal construction projects or federally licensed activities or programs.

2.3.12 Noise Control

The Colorado Noise Abatement Act regulates the maximum permissible noise levels for specific time periods and land use zones.

2.4 PRELIMINARY REMEDIATION GOALS

PRGs are initial numeric cleanup goals for the remedial action. The PRGs are used in this FS for comparison of potential remedial alternatives and will be finalized in the Record of Decision (ROD).

Surface Water

The most stringent ARARs applicable to setting numeric remediation goals are the state regulations that establish WQS (see section 2.3.2 above). The TVS are the default criteria, but different standards may be applied to specific stream segments if adopted by the WQCC. For impacted waters where pollutant concentrations exceed TVS values but the beneficial uses are adequately protected, ambient quality-based standards may be adopted. Where classified uses are not being protected and a use attainability analysis has found non-attainability, site-specific criteria-based standards may be developed. Temporary modifications to numeric standards may be adopted.

The standards for Elk Creek and Coal Creek from the Elk Creek confluence to a point immediately below the Crested Butte Water Supply intake are listed in Regulation 35, Gunnison River Basin Stream Segment 11, which is currently classified for the following uses: Class 1 Cold Water Aquatic Life, Recreation E, Water Supply, and Agriculture. At the present time, there are no temporary modifications to the Segment 11 standards. A TMDL evaluation is underway for Coal Creek, but load allocations that could impact the regulation of discharges from the Standard Mine site have not been established.

Many of the WQS are hardness based. The hardness that should be used in the equations is calculated as the lower 95th confidence limit of the mean hardness in the water body during low flow conditions. A hardness of 65 milligrams per liter (mg/L) was calculated using the 2005 through 2008 Elk Creek water quality data. Hardness in Elk Creek increased during 2009, perhaps due to the pilot bioreactor system or the addition of lime to site soils for Removal Action reclamation efforts. It is unknown if the increased hardness is a temporary or long-term effect, so the 2009 values were not used for developing PRGs. State water quality standards for Stream Segment 11 calculated at hardness values of 65 mg/L, 100 mg/L, and 165 mg/L are provided in Table 2-2.

PRGs were established for site contaminants that were present in Elk Creek at levels greater than the chronic WQS during 2008 or 2009: cadmium, copper, lead, and zinc. The PRGs are based on the TVS; numeric values are shown here for convenience. If the hardness in Elk Creek changes, the PRGs will need to be recalculated based on current hardness values. For example, if the hardness in Elk Creek remains as high as it was in 2009, the PRGs would be recalculated using the current hardness values for the TVS calculation.

Preliminary Remediation Goals – Surface Water

Chemical	Chronic Table Value Standards[1] (micrograms per liter)	Numeric Value[2]
Cadmium	$(1.101672 - [\ln(\text{hardness})*(0.041838)])*e^{0.7998[\ln(\text{hardness})]-4.4451}$	0.031 µg/L
Copper	$e^{(0.8545[\ln(\text{hardness})] - 1.7428}$	6.2 µg/L
Lead	$(1.46203 - [\ln(\text{hardness})*(0.145712)])*e^{1.273[\ln(\text{hardness})]-4.705)}$	1.6 µg/L
Zinc	$0.986 \times e^{(0.8525[\ln(\text{hardness})] + 0.9109)}$	86 µg/L

1 - Table Value Standards are found in 5 CCR 1002-31. Standards are for dissolved metals unless noted.
2 - Numeric values calculated at hardness = 65 mg/L.

A PRG was not established for manganese. Segment 11 is designated for water supply. The regulation states that if the water supply is an actual use of the waters in question or of hydrologically connected groundwater, the less restrictive of the following options should be used: existing quality as of January 1, 2000 or 50 µg/L. The best estimate of existing quality at the Standard Mine site as of January 1, 2000 is the quality measured during 1999 and reported in the Expanded Site Inspection Analytical Results Report (UOS 2000). The dissolved manganese concentrations measured in Elk Creek immediately downstream of the Standard Mine site during June and September of 1999 were 466 µg/L and 850 µg/L, respectively. The corresponding concentrations of dissolved manganese at the Crested Butte municipal water supply intake, located greater than 4 miles downstream of the Standard Mine site, during June and September of 1999 were 28 µg/L and 69 µg/L, respectively. The best estimate of the existing water quality as of January 1, 2000 at the designated ARARs assessment point (Elk-08, Figure 1-1) is the quality measured during pre-Removal Action monitoring. Dissolved manganese concentrations of 546 µg/L (September 2005), 259 µg/L (June 2006), 413 µg/L (July 2006), and 795 µg/L (September

2006) were measured at Elk-08 prior to the Removal Action. The June concentrations are representative of high flow conditions and the September concentrations are representative of low flow conditions. Based on stream flow data at a downstream station, 2006 was a typical water year.

Habitat assessment indicates that Elk Creek will not support a cold water fishery upstream of Elk-05. As a conservative approach, the goal of remediation is to meet the WQS at Elk-08, located approximately 0.8 miles downstream of the site and approximately 0.4 miles upstream of Elk-05.

Groundwater

The groundwater in the vicinity of the Standard Mine site has not been classified; therefore, the Interim Narrative Standard applies. The Interim Narrative Standard requires that the less restrictive of a.) ambient groundwater quality as of January 31, 1994, or b.) that quality which meets the most stringent criteria set forth in Tables 1 through 4 of "The Basic Standards for Ground Water". Since mining activities ceased at the site in 1974, there have been no known anthropogenic site disturbances that would have altered the groundwater quality in the timeframe since January 31, 1994; therefore, the existing groundwater quality data will be used to identify 1994 groundwater quality. Background water quality is degraded as indicated by elevated metal concentrations in on-site wells that are located in areas of the upper basin that are not directly impacted by contaminants within the mine workings. There is no indication that contaminated groundwater is moving off the site. Therefore, PRGs were not developed for groundwater.

Soil

Much of the area has little topsoil naturally and portions of the area, particularly outside the narrow band of disturbance, support a vegetation community. While elevated metal concentrations may have shifted the plant community structure such that more resistant species are present, the plants will contribute to the formation of additional topsoil, mitigating the effects of metals by reducing their bioavailability. Both plants and soil invertebrates will benefit from the reduced bioavailability of metals; therefore, a remedy that disturbs existing vegetation to reduce a calculated risk to vegetation and soil invertebrates will not be considered.

The BERA identified risks to small mammals that are largely driven by lead and to a lesser degree cadmium. The risk assessment contains many uncertainties and assumptions that indicate that risk is overestimated. In some locations, levels of lead are high enough to be of genuine concern, but due to the availability of more suitable habitat in the area, the disturbed portions of the site will not be preferred habitat and use of these areas is likely low.

One of the biggest shortcomings of a deterministic risk assessment is the inability to account for the movements of animals as it relates to their exposure to site contaminants. Risks to the Robin and Flicker are driven by exposure to lead on the site. For the reasons described above this risk is probably overestimated and impacts to these receptors are likely not occurring.

In light of the small amount of area that is contaminated, the availability of suitable habitat around the site, and the conservative nature of the risk estimates, it was concluded that further remedial actions would not significantly benefit the terrestrial receptors on the site. Therefore, PRGs were not established for soil (EPA 2010).

TABLE 2-1
Applicable or Relevant and Appropriate Requirements

Standard, Requirement or Criteria	Description	Type	Status	Comment
GROUNDWATER				
Colorado Ground Water Standards, 5 CCR 1002-8 §§ 3.11.0-3.11.8	Protects existing and potential beneficial uses of designated groundwater resources. Establishes a scheme for identifying groundwater specified areas, for classification of Colorado groundwater, and provides numeric standards.	C	Relevant and Appropriate	
Colorado Basic Standards for Groundwater, 5 CCR 1002-41, pursuant to CRS §§ 25-8-101-703	Establishes basic Statewide water quality standards for groundwater, specific water quality standards for groundwater, and an antidegradation rule.	C	Relevant and Appropriate	
Colorado Groundwater Protection Standard (GPS), 6 CCR 1007-3	Establishes provisions regarding hazardous constituents in groundwater (numeric standards).	C	Relevant and Appropriate	
SURFACE WATER				
Clean Water Act Federal Water Quality Criteria, 40 CFR Part 131, pursuant to 33 USC 1314	Sets criteria for water quality based on toxicity to aquatic organisms and human health. States are required to develop water quality standards based on Federal water quality criteria to protect existing uses of the receiving waters.	C	Applicable	
Colorado Basic Standards and Methodologies for Surface Water, 5 CCR 1002-31, Regulation No. 31, pursuant to CRS §§ 25-8-101-703	Establishes Statewide water quality standards, specific surface water quality standards, and an antidegradation rule.	C/A	Applicable	
Colorado Surface Water Quality Classifications and Numeric Standards, 5 CCR 1002-35, Regulation No. 35, pursuant to CRS §§ 25-8-203 and 204	Assigns water quality standards and classifications for State surface and ground waters for Gunnison and Lower Dolores River basins.	C	Applicable	

TABLE 2-1
Applicable or Relevant and Appropriate Requirements

Standard, Requirement or Criteria	Description	Type	Status	Comment
Colorado Discharge Permit System Regulations, 5 CCR 1002-61, Regulation No. 61, pursuant to CRS § 25-8-501 to 509	Establishes program for permitting discharges of contaminants into waters of the United States within Colorado including discharges of stormwater during construction activities.	A	Applicable	On-site remedial actions do not require permits, but remedies that discharge pollutants from point sources or that involve storm water discharges must meet substantive requirements for a site-specific or general CDPS permit. Requirements for any remedial alternatives that require discharge of pollutants will be considered in the FS. Final requirements will be implemented pursuant to the final remedy decision in the ROD.
Colorado Effluent Limitations, 5 CCR 1002-62, pursuant to CRS § 25-8-205	Sets technology-based effluent limitations for point source discharges.	A	Applicable	
DRINKING WATER				
National Primary Drinking Water Regulations (MCLs), 40 CFR Part 141, Subpart B pursuant to 42 USC 300g-1 and 300j	Establishes health-based standards (MCLs) for public water systems and regulates drinking water quality.	C	Relevant and Appropriate	
National Primary Drinking Water Regulation Goals (MCLGs), 40 CFR Part 141, Subpart F, pursuant to 42 USC 300g-1	Establishes health-based goals for public water systems.	C	Relevant and Appropriate	
National Secondary Drinking Water Regulations (SMCLs), 40 CFR Part 143, pursuant to 42 USC 300g-1(c) and 300j-9	Establishes welfare-based levels (MCLs) for public water systems.	C	Relevant and Appropriate	
Colorado Primary Drinking Water Standards, 5 CCR 1003-1, pursuant to CRS § 25-1.5-203	Establishes health-based standards (MCLs) for public drinking water systems.	C	Relevant and Appropriate	
WETLANDS AND FLOODPLAINS				
Section 404, Clean Water Act, 33 USC 1251-1376; 40 CFR 230-233, 320-330	Prohibits discharge of dredged or fill material into wetlands or navigable waters of the U.S. without permission.	A/L	Applicable	

TABLE 2-1
Applicable or Relevant and Appropriate Requirements

Standard, Requirement or Criteria	Description	Type	Status	Comment
(i) Executive Order No. 11990 Protection of Wetlands; (ii) 40 CFR 6.302(a) and Appendix A	Requires Federal agencies to avoid, to the extent possible, the adverse impacts associated with the destruction or loss of wetlands.	L	(i) TBC (ii) Relevant and Appropriate	The Executive Order is TBC because it is not a promulgated regulation. Nonetheless, EPA is required to comply with the Executive Order. The regulations are relevant and appropriate to dredge and fill activities.
(i) Executive Order No. 11998 Floodplain Management; (ii) 40 CFR Part 6.302(b) and Appendix A.	Requires Federal agencies to evaluate the potential effects of actions they may take in a floodplain to avoid, to the extent possible, the adverse impacts associated with direct and indirect development of a floodplain.	L	(i) TBC (ii) Relevant and Appropriate	The Executive Order is TBC because it is not a promulgated regulation. Nonetheless, EPA is required to comply with the Executive Order. The regulations are relevant and appropriate to dredge and fill activities.
SOLID AND HAZARDOUS WASTE MANAGEMENT				
Colorado Regulations Pertaining to Solid Waste Sites and Facilities, 6 CCR 1007-2, Parts 1 & 2, pursuant to CRS §§ 30-20-100.5-515	Establishes requirements and procedures for land disposal of solid wastes.	A/L	Applicable	
Colorado Hazardous Waste Permit Program, 6 CCR 1007-3, Part 100, pursuant to CRS §§ 25-15-101 *et. seq*.	Establishes provisions covering basic permitting requirements for hazardous waste.	A	Not an ARAR	On-site remedial actions do not require permits. Mine wastes are generally exempt from hazardous waste regulations pursuant to the RCRA Bevill Amendments.
Colorado Hazardous Waste Management Regulations, 6 CCR 1007-3, Parts 260 – 268	Establishes requirements regulating the use, handling, and disposal of hazardous waste.	A	Not an ARAR	Mine wastes are generally exempt from hazardous waste regulations pursuant to the RCRA Bevill Amendments.
Colorado Biosolids Regulations, 5 CCR 1002-64	Establishes requirements, prohibitions, standards, and concentration limitations on use of biosolids as fertilizer and/or organic soil amendment in a manner that protects public health and prevents the discharge of pollutants into State waters.	A	Applicable	

TABLE 2-1
Applicable or Relevant and Appropriate Requirements

Standard, Requirement or Criteria	Description	Type	Status	Comment
AIR				
Clean Air Act National Ambient Air Quality Standards, 42 U.S.C. § 7401 *et. seq.*; Colorado Air Pollution Prevention and Control Act, CRS § 25-7-101 *et. seq.*, 5 CCR 1001-10 Part C(I) and (II), Regulation No. 8	Establishes ambient air quality standards for certain "criteria pollutants" to protect public health and welfare (includes standards for particulate matter and lead).	C	Not an ARAR	National ambient air quality standards (NAAQS) are implemented through the New Source Review Program and State Implementation Plans. The federal New Source Review Program addresses only major sources. Current air emissions from undisturbed mine waste are below a level of concern per EPA's risk assessment. Emissions associated with remedial action are addressed through action – specific ARARs.
Colorado Regulations pertaining to Odors, 5 CCR 1001-4, Reg. 2, Part A	Regulates the generation of odors.	A	Applicable	Applicable to passive treatment system.
Colorado Fugitive Dust Control Plan/Opacity, Regulation No. 1., 5 CCR 1001-3, pursuant to Colorado Air Pollution Prevention and Control Act, CRS § 25-7-101 *et. seq.*	Establishes regulations concerning fugitive emissions from construction activities, storage and stockpiling activities, and haul trucks.	A	Applicable	
SOILS AND SEDIMENT				
Proposed Soil Remediation Objectives Policy Document, Colorado Hazardous Materials and Waste Management Division (December 1997).	Proposes guidance in establishing soils cleanup standards.	C	TBC	
Provisional Implementation Guidance for Determining Sediment Deposition Impacts to Aquatic Life in Streams and Rivers, Colorado Water Quality Control Commission Policy 98-1 (June 1998, revised May 2002)	Guidance for assessing impacts to aquatic life and habitat conditions caused by human induced erosion and deposition of materials in aquatic systems.	C	TBC	

TABLE 2-1
Applicable or Relevant and Appropriate Requirements

Standard, Requirement or Criteria	Description	Type	Status	Comment
MINING RECLAMATION				
Colorado Mined Land Reclamation Act, CRS § 34-32-101 *et. seq.*; 2 CCR 407-1 Rule 3	Regulates reclamation of mined land; establishes performance standards and regulations pertaining to inspection, monitoring and enforcement.	A/L	Relevant and Appropriate	While on-site remedial actions do not require permits, the substantive requirements of these regulations are relevant and appropriate to mine reclamation activities including adit discharge control, reclamation of waste rock and revegetation.
Colorado Noxious Weed Act and regulations, CRS § 35-5.5-101-119; 8 CCR 1203-19	Colorado Regulations addressing management of noxious weeds.	L	Applicable	
ENVIRONMENTAL COVENANTS				
Colorado Environmental Covenants, CRS §§ 25-15-317-327	Required where remediation results in residual contamination levels determined by a regulatory agency no to be safe for all uses, or where remediation incorporates any engineered feature or structure or requires any monitoring, or maintenance, or operation, unless eligible for exemption as provided under § 25-15-320.	A/L	Applicable	
FISH AND WILDLIFE				
Fish and Wildlife Coordination Act, 16 USC 661 *et. seq.*, 40 CFR 6.302(g)	Requires Federal agencies to consider the effect of modifications of any stream or other water body and to provide adequate provision for protection of fish and wildlife resources.	L	Applicable	
Endangered Species Act, 16 USC 1531-1543 50 CFR Parts 17, 402; 40 CFR 6.302(h)	Requires Federal agencies to conserve endangered species and critical habitat upon which species depend.	L	Applicable	
Migratory Bird Treaty Act, 16 USC 703-12	The act contains a requirement for agencies to examine proposed actions by the government relative to habitat impacts and impacts to individual organisms.	L	Applicable	
Colorado Wildlife Enforcement and Penalties Act, CRS §§ 33-6-101-130	Prohibits actions detrimental to wildlife, and establishes provisions governing the taking, possession, hunting and use of wildlife and migratory birds.	A/L	Applicable	

TABLE 2-1
Applicable or Relevant and Appropriate Requirements

Standard, Requirement or Criteria	Description	Type	Status	Comment
Colorado Non-game, Endangered, or Threatened Species Act, CRS §§ 33-2-101-108	Protects endangered and threatened species and preserves their habitats. Requires coordination with the Division of Wildlife if remedial activities impact State-listed endangered or threatened species or their habitats.	L	Applicable	
Colorado Wildlife Commission Regulations, 2 CCR 406, pursuant to CRS §§ 33-2-101-108	Establishes specific requirements for protection of wildlife	A/L	Relevant and Appropriate	
Protection of Fishing Streams, CRS § 33-5-101-107	Establishes notification requirements to the Colorado Wildlife Commission for modifications to any stream by any type of construction.	A	Applicable	
HISTORIC PROPERTIES, LANDMARKS, AND NATURAL AREAS				
Colorado Natural Areas, CRS § 33-33-104	Maintains a list of plant species of special concern for the State and regulates protected species within a formally designated "natural area." Coordination with the Division of Parks and Outdoor Recreation is recommended if activities will impact listed species within a designated "natural area."	L	Applicable	
Historic Sites Act, 16 USC §461; 36 CFR Part 62.6(d); 40 CFR Part 6.301(a)	Requires Federal agencies to consider the existence and location of national natural landmarks on the National Registry of Natural Landmarks to avoid undesirable impacts on such landmarks.	L	Applicable	
Archaeological and Historic Preservation Act, 16 USC §469; 40 CFR Part 6.301(c)	Requires Federal agencies to undertake data recovery and preservation activities where an action may cause irreparable loss or the destruction of significant scientific, prehistoric, historic, or archeological data.	L	Applicable	
National Historic Preservation Act, 16 USC §470; 36 CFR Part 800; 40 CFR Part 6.301(b)	Requires Federal agencies to take into account the effect of an undertaking on any property with historic, architectural, archeological, or cultural value that is listed on or eligible for listing on the National Register of Historic Places.	L	Applicable	The U.S. Forest Service conducted a cultural resources survey in June 2006 and found that the site is ineligible for the National Register of Historic Places and that the remedial action will not affect historic properties. The Colorado Historical Society has concurred with these findings.

TABLE 2-1
Applicable or Relevant and Appropriate Requirements

Standard, Requirement or Criteria	Description	Type	Status	Comment
Colorado Historic Preservation Act, CRS §§ 24-80-101-107, 8 CCR 1504-7, § 10(B)(3)(b)	Establishes requirements for protecting properties of historical significance; establishes procedures and requires a permit for investigation, excavation, gathering, or removal from the State of any historical, prehistorical, or archeological resources on State lands. Requires an excavation permit and notification if human remains are found on State lands.	L	Not an ARAR	Actions do not affect state lands. Historic resources will be addressed and regulated under the more stringent National Historic Preservation and Act and implementing federal regulations.
Colorado Historical, Prehistoric and Archaeological Resources Act, CRS 24-80-401-410, 1301-1305; 8 CCR 1504-7	Establishes standards and permitting requirements for archaeological and paleontological work in Colorado.	L	Not an ARAR	Actions do not affect state lands. Historic resources will be addressed and regulated under the more stringent National Historic Preservation and Act and implementing federal regulations.
NOISE CONTROL				
Colorado Noise Abatement Statute, CRS §§ 25-12-101-109	Establishes maximum permissible noise levels for particular time periods and land use zones.	A	Applicable	

C Chemical Specific
A Action Specific
L Location Specific

TABLE 2-2
Water Quality Standards[1]
(Concentrations are dissolved concentrations in micrograms per liter unless noted)

	Acute	Chronic	Acute	Chronic	Acute	Chronic
	Hardness = 65 mg/L		Hardness = 100 mg/L		Hardness = 160 mg/L	
Arsenic (total recoverable)	340	0.2	340	0.2	340	0.2
Cadmium	1.2	0.31	1.7	0.4	2.5	0.6
Chromium III (total recoverable)	50	NL	50	NL	50	NL
Chromium VI	16	11	16	11	16	11
Copper	9.0	6.2	13.4	9	20.9	13.4
Iron (water supply)	NL	300	NL	300	NL	300
Iron (total recoverable)	NL	1000	NL	1000	NL	1000
Lead	40	1.6	65	2.5	107	4.2
Manganese (water supply)	NL	*	NL	*	NL	*
Manganese	2590	1430	2990	1650	3490	1930
Mercury (total)	NL	0.01	NL	0.01	NL	0.01
Nickel	325	36	468	52	697	77
Selenium	18.4	4.6	18.4	4.6	18.4	4.6
Silver	0.97	0.036	2.03	0.075	4.55	0.169
Zinc	99	86	143	124	214	186
NH_3, mg/L	**	**	**	**	**	**
Cl_2, mg/L	0.011	0.019	0.011	0.019	0.011	0.019
D.O., mg/L	6		6		6	
D.O. (sp), mg/L	7		7		7	
pH	6.5-9.0		6.5-9.0		6.5-9.0	
F. Coli , per 100 ml	NL		NL		NL	
E. Coli, per 100 ml	126		126		126	
CN, mg/L	0.005		0.005		0.005	
Sulfur, mg/L	0.002		0.002		0.002	
Boron, mg/L	0.75		0.75		0.75	
NO_2, mg/L	0.05		0.05		0.05	
NO_3, mg/L	10		10		10	
Chloride, mg/L	250		250		250	
SO_4, mg/L (water supply)	250		250		250	

1 WQS are provided in 5 CCR 1002-35, Stream Segment 11, Upper Gunnison River Basin. Where applicable, the standards were calculated at the given hardness using the equations from the Table Value Standards found in 5 CCR 1002-31.
NL Not Listed
* The water supply manganese standard for the Standard Mine site is the existing quality as of January 1, 2000.
** Ammonia standards are based on whether early life stages are present or absent and are based on pH.

3.0 IDENTIFICATION AND SCREENING OF TECHNOLOGIES AND PROCESS OPTIONS

This section presents the identification and screening of available remedial technologies and process options. Section 3.1 describes general response actions and the evaluation criteria that are used in the following sections. Section 3.2 lists technologies that fit into each general response action category and the process options that may be used to implement the technologies. The technologies and process options are evaluated and compared. Section 3.3 presents the alternatives selected for further evaluation. Section 3.4 describes site-specific treatability and pilot studies. The screening of technologies and process options is summarized on Tables 3-1 and 3-2. Table 3-1 summarizes the preliminary screening of technologies and process options, and Table 3-2 summarizes the more detailed screening of alternatives retained after the preliminary screening.

3.1 GENERAL RESPONSE ACTIONS

General response actions are the wide variety of actions that could be taken to address contamination at a Superfund site. The actions can be placed in three categories: conventional technologies, innovative technologies, and emerging technologies. Conventional technologies have been proven to be effective over time in similar circumstances. Innovative technologies have not been widely applied and may require field testing before they would be proven for application at the site. Emerging technologies are similar to innovative technologies, but are less developed and would require laboratory or pilot-scale testing to demonstrate the effectiveness and applicability to the site. In addition to various technologies that could be employed to mitigate contamination at the site, the alternatives of "No Further Action" and "Institutional Controls" were also included in this analysis.

General response actions include:

1) No Further Action. No Further Action consists of no action at the site other than limited monitoring. According to the NCP, No Further Action must be considered and be used for comparison with other potential alternatives.

2) Institutional Controls: Institutional controls are administrative or legal controls that reduce the potential for exposure to affected media by limiting land or resource use as determined necessary to protect human health and the environment. An example of an institutional control is an environmental covenant that could be used to restrict land use at the site. Institutional controls could be used to address any of the media of concern.

3) Collection, Diversion, or Containment: Collection, diversion, and containment are physical measures that could be used to control and/or reduce the release of site contaminants or to prevent exposure to the contaminants. Installation of surface water control ditches or capping a mine waste pile in place would fit this category.

4) Treatment: Treatment consists of performing an action on the source materials to reduce the toxicity, mobility, or volume of contaminated material. Addition of lime to adit discharge water in order to precipitate metal contaminants followed by collection of the precipitate could be considered treatment.

5) Removal and Disposal: Removal and disposal refers to excavation of contaminant source material, transportation to a disposal facility, and placement at the disposal facility. Disposal could be at a treatment facility, an on-site repository, or an approved off-site disposal facility.

6) Re-Use: Reusing contaminated material as a product could mitigate contaminant impacts at the site. This action may involve re-milling tailings or using overburden as a construction material.

The above technologies are generally considered conventional, but variations of the technologies can be considered innovative or emerging. For example, certain types of water treatment, such as biochemical reactors, are currently considered innovative or emerging.

General response actions may be considered alone or in combination to meet the RAOs.

3.2 IDENTIFICATION AND SCREENING OF TECHNOLOGY TYPES AND PROCESS OPTIONS

This section summarizes the technology identification and screening process. Technology types and process options associated with the general response actions were identified to address the two media of concern for the site, water and soil. A range of technologies and process options were considered. Process options identified as not being technically implementable or applicable to this site were eliminated from further consideration.

Brief descriptions of the technically feasible technologies and associated process options for each general response action are presented below. Each technology and process option was screened using the criteria of effectiveness, implementability, and cost. The criteria were established by EPA (EPA 1988).

Effectiveness: The effectiveness evaluation includes three factors: the estimated effectiveness in handling the estimated quantity of contaminated media and meeting the RAOs, the potential impacts to human health and the environment during construction and implementation, and how proven and reliable the process is given the contaminants and conditions at the site.

Implementability: The implementability evaluation includes both technical and administrative implementability. Technical implementability considers the workability of installing and operating the technology with site-specific conditions and contaminants. Administrative implementability considers the ability to get the necessary labor, materials, permits, and other logistical requirements to implement the technology.

Cost: The cost evaluation in the screening process is a relative comparison between each of the alternatives. The costs for each process are estimated as low, moderate, or high related to the other processes.

This screening evaluation focused on comparing the process options to each other to select the most viable technologies and process options for further evaluation.

3.2.1 No Further Action

No further action includes not taking any further actions for controlling or removing contaminants from the site. Limited monitoring could be performed. Consideration of this alternative is required under the NCP and is the point of comparison to which potential remedial actions are compared. EPA guidance (EPA 1988) indicates that, in the FS Report, the No Further Action alternative may be dropped from consideration if it fails to meet the evaluation criteria. Therefore, if the No Further Action alternative is not

protective of human health and the environment, it may be removed as an alternative for consideration. No Further Action was retained for the development of alternatives.

3.2.2 Institutional Controls

Description: Institutional controls are administrative or legal controls that reduce the potential for exposure to affected media by limiting land or resource use as determined necessary to protect human health and the environment. Institutional controls could take the form of government controls such as zoning restrictions or ordinances, Environmental Covenants, deed restrictions, Unilateral Administrative Orders or Administrative Orders on Consent, and informational controls such as fencing or deed notifications. Monitoring can also be considered an institutional control. Institutional controls could be used to address any of the media of concern.

Screening: Institutional controls would not be effective in reducing the flow of metal contaminants into Elk Creek and downstream water bodies but could be moderately effective in reducing human exposure to contaminated soils. Institutional controls may also be useful for long-term implementation of the remedy. Institutional controls are easily or moderately implementable and typically carry low costs.

Due to the easy to moderate implementability and low cost, institutional controls were retained for the development of alternatives in Section 4.

3.2.3 Collection, Diversion, or Containment

Collection, diversion, and containment of site water involves physical measures such as diversion ditches or ponds to control release or direct the flow of affected water at the site or in upstream or downstream areas. Containment of contaminated site soils involves capping of the waste rock. The following technology type(s) and process options could be used for collection, diversion, and containment of water and soil.

3.2.3.1 Collection

Extraction Wells

Description: One or more extraction wells could be installed and either pumped or gravity drained to create a groundwater capture zone. Wells could be installed vertically in the area of interest and pumped to capture the groundwater or installed sub-horizontally such that water would drain from the area of interest via gravity. Wells could also be installed sub-horizontally in the mine workings to capture groundwater to prevent flow to lower levels of the mine. The wells could be located to target collection of either clean water or contaminated water. If wells are installed in an area with relatively clean groundwater, the water extracted from the wells could be diverted away from the mining impacted area to reduce the amount of potentially clean water that contacts contaminated materials or enters the mine workings. If wells are installed to collect contaminated groundwater, the water quality could be monitored to determine if treatment is required. Extraction wells could be implemented in conjunction with diversion ditches and/or water treatment.

Screening: The conceptual groundwater model developed by the USGS (USGS 2010a) indicates that groundwater is flowing through a fracture-controlled system. The effectiveness of extraction wells is directly related to the

interconnection of the fractures and the frequency at which fractures are encountered along the alignments of the wells. If the fracture system is sufficiently intercepted, then extraction wells would be effective for collecting groundwater. Additional investigations and analyses would be required to fully evaluate the effectiveness of extraction wells. Extraction wells are easily implemented via conventional track- or truck-mounted drilling equipment for surficial wells. Wells within the workings could be moderately difficult to install with conventional drilling equipment due to limited access within the mine. The capital cost of wells drilled from the surface would be lower than that of the underground wells; however, both would be low to moderate in cost as compared to the other technologies and process options. Vertical wells would require pumps thereby incurring a moderate to high operation and maintenance (O&M) cost. Sub-horizontal wells typically incur low maintenance costs since they are gravity drained; however, if a collar system and associated piping is required the O&M costs would typically be moderate.

Based on the ease of implementability and low to moderate cost of extraction wells, the process option was retained for the development of alternatives in Section 4.

Ponds

Description: Adit discharge or seepage could be collected in one or more engineered basins (i.e., ponds). Ponds could be used to regulate flow or facilitate pipe capture of site water, allowing the water to be pumped or gravity fed to a treatment facility or diversion ditches. Ponds do not prevent or mitigate contamination of site water and would be implemented in conjunction with other technologies and process options, such as diversion and/or treatment.

Screening: Ponds are highly effective for water management when design parameters are known or can be estimated. The design would allow for collection of a specified volume of water based on estimated flow rates and typical storage durations. Implementation would be easily attained with conventional construction equipment. The capital and O&M costs associated with ponds would be low compared to the other technologies and process options. Periodic maintenance such as clearing of debris and sediment buildup is typically required. O&M costs are generally low.

Based on typical high effectiveness under known site conditions, ease of implementability, and low capital/O&M costs, the ponds process option was retained for the development of alternatives in Section 4.

3.2.3.2 Diversion

Diversion Channels

Description: Diversion channels are trenches or berms used to divert surface water flow and/or near surface groundwater flow around contaminated materials, the mine workings, geological features, and/or remedial facilities. The channels would serve as horizontal barriers to prevent surface water flow into areas where water may be impacted by site contaminants. Diversion channels, as described herein, differ from interceptor trenches in that they will cut-off surface water and near surface groundwater flow (i.e., less than approximately 5 feet deep) as

opposed to moderately deep groundwater flow (i.e., approximately 5 to 15 feet deep, depending on subsurface conditions).

Screening: The effectiveness of diversion channels is dependent on the accuracy of estimating the quantity of the surface water and near surface groundwater flows that will be intercepted. If the flows are known or can be easily estimated, diversion channels would be highly effective in directing water away from areas of concern. Diversion channels are easily implemented with standard construction equipment. The capital cost for construction is moderate compared to the other process options, primarily due to the capital costs associated with obtaining borrow materials. The O&M costs would be low for diversion channels, but annual to semi-annual clearing and repair could be required.

Based on the potential for high effectiveness under known conditions, ease of implementability, and moderate to low capital/O&M costs of diversion channels, this process option was retained for the development of alternatives in Section 4.

Interceptor Trenches

Description: Interceptor trenches involve installing one or multiple trenches across groundwater flow paths to cut off water flow and limit further migration of clean and/or contaminated water to downgradient locations. Herein interceptor trenches differ from diversion channels in that they will act as a horizontal hydraulic barrier to moderately deep groundwater (i.e., approximately 5 to 15 feet depending on subsurface conditions) as opposed to surface water and/or near surface groundwater (i.e., less than approximately 5 feet deep) flows.

Screening: Interceptor trenches are more effective when located in porous and permeable media than when located in fractured bedrock because groundwater flow is less predictable in fractured bedrock. Due to the conceptual groundwater model, which indicates that groundwater near the Standard Mine flows in a fracture controlled system, the effectiveness of interceptor trenches was estimated to be very low. Implementability was estimated to be difficult because bedrock is at or near the surface over most of the site, requiring specialized excavation techniques and/or blasting to reach depths necessary to intercept groundwater flow. Capital costs would be very high for specialized excavation techniques and/or blasting. O&M costs for interceptor trenches would be low.

Based on the estimated low effectiveness, difficult implementability, and very high capital cost, interceptor trenches were screened from further alternative development in Section 4.

French Drains

Description: French drains are trenches that are excavated and then backfilled with granular material and a perforated pipe (drain) to collect groundwater. French drains act as horizontal hydraulic barriers similar to interceptor trenches; however, they have a pipe and are backfilled with granular material thus decreasing maintenance cleanout requirements. The drains would be designed to capture contaminated groundwater and route it for treatment or to provide a pathway for clean groundwater around contaminated areas.

Screening: French drains are most effective in subsurface conditions that allow groundwater to flow in a porous and permeable media where flow rates are high. Due to the conceptual groundwater model, which indicates groundwater flows in a fracture controlled system with relatively slow flow, the effectiveness of French drains was estimated to be very low. French drains are also susceptible to clogging and blinding due to sediment buildup within the coarse backfill and slotting on the piping. Clogging and blinding would decrease effectiveness and increase O&M costs in the long run. Implementability was estimated to be difficult because bedrock is at or near the surface over most of the site, requiring specialized excavation techniques and/or blasting to reach depths necessary to intercept groundwater flow. Capital cost would be very high for specialized excavation techniques and/or blasting, and for processing of granular material for backfill. O&M costs would be low.

Based on the estimated low effectiveness, difficult implementability, and very high capital cost, French drains were screened from further alternative development in Section 4.

Grout Curtain

Description: A grout curtain is a low-permeability horizontal barrier constructed vertically as a subsurface "wall" for impeding groundwater flow. Grout is injected into the subsurface soil and bedrock, typically through small-diameter drill holes. Grout curtains can be effective in soil-like materials or highly fractured, porous, and permeable bedrock. A grout curtain could be considered for controlling seepage in areas of fractured bedrock if the nature of the fracture system provides interconnection.

Screening: The effectiveness of a grout curtain at the Standard Mine site is relatively unknown. If the fracture system in the bedrock is well connected, the effectiveness would be moderate to high. If the fracture system is not well connected the effectiveness would be very low. Groundwater flow would follow pathways around and below a grout curtain and into the mine workings if the curtain was not installed to depths similar to that of the lowest level in which flow prevention is required, which is approximately 200 to 500 feet deep. Installing the grout curtain to these depths would cause the implementability to become more difficult and the capital cost to be very high. In general the implementability of a grout curtain is moderately easy with standard drilling equipment and typical depths (i.e., 100 feet). The capital cost would also be dependent on the spacing of the drill holes. If the fracture system is interconnected, a wider spacing could be utilized potentially decreasing capital costs; however, if the fracture system is not well interconnected a tight spacing would be required, thus increasing capital costs. O&M costs would be low.

Installation of a grout curtain was estimated not to be technically implementable and could be very costly so was screened from further alternative development in Section 4.

Pressure Grouting

Description: A low-permeability barrier is created by pressure grouting in and around a target zone to reduce groundwater flow. Grout is injected into small diameter drill holes under high pressure to seal and/or fill fractures and voids within the surrounding soil and/or bedrock to reduce groundwater flow. Pressure grouting was considered in conjunction with other diversion process options such as flowable fill.

Screening: Pressure grouting has high effectiveness when targeting zones of high porosity and permeability. It is easily implemented when conducted from the surface with conventional drilling equipment. If conducted within the workings, the implementability would be moderately difficult due to the constrained environment. The capital cost would be moderate and O&M costs would be low.

Based on the relatively high effectiveness, easy to moderately difficult implementability, and moderate to low cost, pressure grouting was retained for alternative development in Section 4.

Slurry Wall

Description: Subsurface slurry walls are barriers to groundwater flow. Soil and bedrock are excavated, and the excavation is filled with low-permeability slurry or concrete, thereby slowing or reducing the flow of groundwater.

Screening: The effectiveness of a slurry wall could be high. Slurry walls are more easily implemented in subsurface conditions that are more soil-like than found at the Standard Mine site. The shallow nature and relative high strength of bedrock at the site would cause difficult implementability requiring specialized excavation techniques and potentially requiring blasting. This could generate high capital cost; O&M costs would be low.

Based on difficult implementability and high capital costs, slurry walls were screened from alternative development in Section 4.

Flowable Fill

Description: Flowable fill is a self-compacting, low-strength, self-leveling material with a flowable consistency that is used as an economical fill or backfill material as an alternative to compacted granular fill. Flowable fill is usually composed of water, cement, fine aggregate, and fly ash or slag. Flowable fill could be gravity fed into a drift from a ready mix truck at the surface because of its fluid-like composition. A clean surface is recommended wherever the flowable fill is to be placed, so the drift would need to be cleared of timber, rail, pipes, and other construction and mining material, as well as accumulated muck. An option on Level 3 is to place flowable fill on the adit floor to a nominal height in an effort to collect inflow/infiltration and direct it outside of Level 3. This could reduce the water volume that reaches lower levels.

Screening: The effectiveness of flowable fill is high when placed on a surface that has been sufficiently cleaned and prepared. It is susceptible to cracking, but

also has self-healing properties. It is easily implemented and would have moderate capital and low O&M costs.

Based on the high effectiveness, easy implementation, and favorable costs, flowable fill was retained for alternative development in Section 4. Flowable fill could be considered for use in conjunction with polyurethane foam fill and shotcrete.

Polyurethane Foam Fill

Description: Polyurethane foam (PUF) is a liquid to solid system specifically designed for use in abandoned mine applications to seal mine appurtenances such as shafts, adits, drifts, raises, and winzes. The installation process involves mixing two separate bags of liquid chemicals to form a cream-like substance. The "cream" is then poured into a void such as a raise or winze that has been prepared with form work at the bottom or back of the void to provide confinement. The "cream" flows onto the form and up against the void's walls or sides, rising within minutes as a foam. Placement occurs in lifts, repeating as many times as needed to fill the targeted void. PUF is not affected by acid drainage and does not shrink.

Screening: PUF is highly effective for closure of mine workings such as shafts, adits, drifts, raises, winzes, etc. There is some susceptibility for leaking along side joints if not properly installed. PUF is easily implemented by mixing the two compounds. The most difficult aspect of implementation is installation of forms. Proper ventilation and heat protection are required during installation due to the exothermic reaction that consumes oxygen and releases carbon dioxide. There is high capital cost and low O&M costs associated with PUF; however, the capital costs of PUF would be much lower than a concrete equivalent when considering constraints associated with construction in the mine workings.

Based on the potential for high effectiveness, relative ease of implementation, and low O&M costs, PUF was retained for alternative development in Section 4. PUF could be considered for use in conjunction with flowable fill.

Concrete

Description: Concrete could be used to create vertical or horizontal barriers for sealing mine workings such as shafts, adits, drifts, raises, and winzes. These barriers could also be considered under the containment general response action.

Installation of concrete would require construction of formwork and associated anchoring. Reinforcing steel would need to be fully encapsulated in concrete and/or be acid resistant for protection from corrosive or acidic water. All surfaces interacting with the concrete would need to be cleaned and prepared prior to placement.

Screening: Concrete could serve as a highly effective barrier to flow. It would be susceptible to weathering, cracking, and chemical degradation. Implementation of a vertical barrier would be highly difficult. Tasks such as sealing a raise within the workings would require manual preparation by personnel suspended from rope rigging. Preparation could include removal of any blockage, scaling of loose blocks, and potentially keying the concrete into

competent rock surrounding the raise. Formwork and anchoring would then have to be installed through a similar process of personnel suspended from rope rigging. Pumping would be required to get concrete into the workings.

Implementation of a horizontal barrier, such as a bulkhead, within in the workings would be moderately difficult. The adit would have to be prepared by removing blockages, scaling loose blocks, and potentially keying the concrete into the floor, ribs, and back of the adit. Form work could be placed manually and concrete pumped into place.

In general, the capital cost would be very high due to the associated costs in a constrained location such as mine workings. O&M costs would most likely be low to moderate once the concrete is in place.

Based on the very high capital cost, highly difficult implementation, and comparison of concrete versus PUF, concrete as a vertical barrier was screened from the alternative development in Section 4. However, based on the high effectiveness, moderate difficulty for implementation, and lack of a preferred substitute process option, concrete as a horizontal barrier (i.e., bulkhead or flow retention barrier) was retained for alternative development in Section 4 and the use of concrete for a bulkhead is further described in Section 3.2.3.3.

Shotcrete

Description: Shotcrete is a generic name for pneumatically placed concrete regardless of aggregate size or additive. Using a concrete hopper filled by a ready mix truck on the surface, shotcrete can be applied underground at locations such as the back or floor of adits where groundwater is seeping into the drift. Shotcrete can be applied to wet rock if done carefully using accelerators and fibers in an attempt to slow inflow/infiltration into the mine workings. Shotcrete can also be placed to cover the geologic features, such as fractures, joints, and faults, through which water could potentially flow or seep.

Screening: Shotcrete can be highly effective as a barrier to flow when applied to target areas that are acting as or are potential flow pathways. It is easily implemented. Capital cost is moderate and O&M could be high if, for example, it is placed in high flow zones potentially requiring re-application. Shotcrete could be considered for use in conjunction with flowable fill, polyurethane foam fill, and extraction wells.

Based on the potential for high effectiveness when utilized in conjunction with other barriers, ease of implementation, and moderate costs, shotcrete was retained for the alternative development in Section 4.

3.2.3.3 Containment

Capping

Description: Source material could be capped to limit its exposure to air and/or water. Contaminating material could be encircled or covered with an impervious or low-permeability cap to prevent interaction with air and water. The cap could be constructed of materials such as a clayey soil, shotcrete, or concrete, or a multi-media system could be designed.

Screening: If the source of contamination is known and relatively localized, capping could be highly effective for preventing air and water that is currently in the adit from interacting with the source materials. The effectiveness of preventing groundwater from encountering the contaminating material is most likely low without the inclusion of another barrier.

Implementation of a clayey soil, concrete, or multimedia cap to contain source material within the mine workings would be difficult, whereas shotcrete would be easy. The clayey soil, concrete, and multimedia caps would all require specialized construction techniques (i.e., hand placement and compaction of materials, hand concrete formwork and anchoring) due to the constrained conditions within the workings. Shotcrete would be easily implemented hydraulically. Capping would incur moderate to high capital cost, regardless of the media selected for the cap. A clayey soil would most likely have a low to moderate cost for O&M. A shotcrete cap would have a high O&M cost. A concrete and multimedia cap both would incur a moderate O&M cost.

Based on the unknown extent of contaminating materials within the workings which directly relates to the effectiveness of capping, along with the high capital and O&M costs, capping with soil and concrete was screened from further alternative development in Section 4. Capping limited areas of source materials within the mine workings with shotcrete was retained for alternative development in Section 4.

Bulkhead

Description: A bulkhead could be constructed to capture and either store mine drainage within the workings (i.e., impermeable bulkhead) or to regulate the flow out of the workings (i.e., flow-through bulkhead). Contaminated water would either be permanently or temporarily stored in the mine workings as well as the surrounding soil and rock formations. The bulkhead could be constructed out of materials such as concrete, foam, soil, or rock or a combination of these materials. A pipe would be installed through the bulkhead as a safety measure to allow release of water in an emergency situation and/or to regulate flow rates.

Screening: The effectiveness of a bulkhead depends on the condition of the rock surrounding the drift in which the bulkhead is being constructed. It also depends on the amount of storage within the workings for retaining mine discharge. Typically, a bulkhead is highly effective as an impermeable barrier and flow regulator. Implementability is dependent on the condition of the surrounding rock can be moderately difficult. Capital cost would be high with a low to moderate O&M cost.

Based on the potential for high effectiveness, moderately difficult implementation, and low O&M costs, bulkheads were retained for alternative development in Section 4. A bulkhead could be considered for use in conjunction with treatment options such as a biochemical reactor.

3.2.4 Treatment

Treatment technologies may be categorized into three types: physical, chemical, and biological. The following sections provide a brief description of each type and examples of process options within each category.

3.2.4.1 Physical Treatment Technologies

Physical treatment of water is based on the difference in physical characteristics of the metal contaminants and the water in which they are dissolved. Examples include filtration, based on the difference in particle or ion size; adsorption, based on the difference of ability to adhere to solid surfaces; sedimentation, based on the difference in density; and evaporation, based on the difference in boiling point.

Filtration

Description: Filtration separates suspended solids from a liquid by passing the mixture through a porous medium that allows the water to pass but retains the solids. Several filter mediums can be used, including granular material and fabric. Filtration can be used to remove suspended particulate material before treatment of ionic species from contaminated water and/or to remove precipitate from the water. Conventional filtration processes do not remove dissolved contaminant ions from solution and even with optimum performance result in a concentrate stream that requires further treatment and/or disposal.

Microfiltration allows removal of chemical compounds such as precipitates and other chemical compounds from a solution. Nanofiltration is similar, but allows separation of larger metal ions from the water. These are also considered membrane processes (see below). There are no known large scale acid mine drainage treatment plants using this technology at this time.

Screening: Conventional filtration would not remove dissolved contaminant ions, which are the primary form of contaminants flowing from adit discharges, and therefore would need to be combined with other unit processes to be effective. Filtration produces a concentrate that would require additional treatment and/or disposal. O&M of a filtration system would be difficult in the remote environment of the Standard Mine. Year-round access to the site to operate any active treatment process would be difficult and costly.

Based on difficult implementability, high cost, and the availability of more proven, effective technologies for treating mining impacted waters, this alternative was eliminated from further consideration.

Membrane Processes/Reverse Osmosis

Description: Reverse osmosis is a membrane technology used to separate larger ions from a water solution. Water is forced through the membrane by application of pressure greater than the normal osmotic pressure. The properties of the membrane determine the rate of transport and the species that will pass through the membrane. Reverse osmosis and other membrane technologies are generally used as a polishing step in water treatment, but can also be used to concentrate the metal ions in solution for subsequent treatment by precipitation or other

method given an appropriate membrane. This method reduces the anion concentrations (i.e., sulfate) in addition to reducing the metal ion concentrations in the effluent water. Care must be taken to prevent cake formation on the membrane. Specialized membranes and electrocharging techniques have been developed to allow for treatment of more concentrated solutions without excess membrane clogging. Membrane processes result in a concentrate stream that requires further treatment and/or disposal.

Screening: Reverse osmosis or membrane technologies would remove dissolved contaminant ions but must be combined with other unit processes to be effective. Operation of a membrane or reverse osmosis system would be difficult in the remote environment of the Standard Mine. Year-round access to the site to operate any active treatment process would be difficult and costly.

Based on difficult implementability, high cost, and the availability of more proven, effective technologies for treating mining impacted waters, this alternative was eliminated from further consideration.

Sedimentation/Clarification

Description: Sedimentation is the removal of suspended solids from water by gravity settling. The emphasis can be on producing a thick sludge (thickening) and/or producing a clear effluent (clarification). The operation is often aided by addition of a flocculent to assist in coagulation and settling of particles. A sedimentation system may be active, requiring an on-site operator or remote operations sensors and equipment monitored by an operator, or may be passive, such as a sedimentation pond that is unattended except during solids removal.

Screening: Sedimentation is an effective method of separating solids that result from a precipitation process or other primary treatment technique. A sedimentation process is implementable at the site because it can operate unattended during winter months when site access is limited. The cost of constructing a sedimentation basin is low and the cost of maintaining a sedimentation basin is considered moderate.

Based on high effectiveness, easy to moderate implementability, and low to moderate cost, this option was retained for further evaluation.

Carbon Adsorption

Description: Carbon adsorption using charcoal or activated carbon can be considered both adsorption and ion exchange. Carbon adsorption is more commonly used for organic contaminants; however, some work has been done on metal removal, most commonly in removing precious metals from cyanide complexes. As water flows through a chamber packed with charcoal or activated carbon, metal ions are adsorbed onto the large surface area of the substrate. When the capacity of the substrate to adsorb ions is reached, the substrate must be regenerated, either by incineration or flushing. Continuous flow carbon adsorption has not been proven in practice and may be difficult and expensive for treatment of waters with high metal concentrations.

Screening: Carbon adsorption would remove dissolved contaminant ions from the adit discharge water but would need to be combined with other unit processes

to be effective and implementable. Operation of a carbon adsorption system would be difficult in the remote environment of the Standard Mine. The cost of operating a carbon adsorption system is high for the high contaminant concentrations that are present in adit discharge water. Year-round access to the site to operate any active treatment process would be difficult and costly.

Based on difficult implementability, high cost, and the availability of more proven, effective technologies for treating mining impacted waters, this alternative was eliminated from further consideration.

Evaporation

Description: Natural evaporation in large ponds (with or without vegetation) can be used in hot dry climates with low influent flow rates, large available area for evaporation, and no requirement for discharge water. Evaporation can be enhanced by heating the water and/or decreasing pressure. Increasing temperature and/or decreasing pressure would require large amounts of energy, making this technology cost prohibitive. The elimination of discharge water may be problematic if clean water discharge is needed to meet legal requirements or to meet standards at a point of compliance.

Screening: The evaporation process is effective in removing metal contaminants from water, but the evaporation process is unsuited to the wet, harsh environment at the site.

Based on difficult implementability, this process was eliminated from further consideration.

Solvent Extraction

Description: Solvent extraction uses an organic liquid mixed with contaminated water to transfer metal ions from the water to the organic liquid. The ions partition to and concentrate in the organic liquid. The organic liquid is then stripped of metals using sulfuric acid and recycled. The sulfuric acid solution must then undergo an electrolysis process (electrowinning) or crystallization. This method is particularly useful when only one metal requires removal because organic liquids are available to target specific metal ions. There are some limitations on organic compounds able to remove all of the contaminants in the Standard Mine water, the potential removal capacity for each metal, and the physical conditions under which optimum contaminant removal is possible.

Screening: The effectiveness of solvent extraction to remove high concentrations of metal contaminants from water is limited. Year-round access to the site to operate any active treatment process would be difficult and costly. This process can be very expensive to maintain and operate.

Based on limited effectiveness, difficult implementability, high cost, and the availability of more proven, effective technologies for treating mining impacted waters, this alternative was eliminated from further consideration.

Physical treatment of soil can include encapsulation, vitrification, and soil mixing.

Encapsulation

Description: Encapsulation is the addition of a chemical to coat contaminated soils, thereby reducing the mobility of contaminants.

Screening: Encapsulation can be effective in reducing the short-term mobility of metals contaminants. The implementability is easy to moderate due to the location and size of the waste rock. The cost of encapsulation is moderate.

Based on moderate long-term effectiveness, easy implementability and moderate cost, this alternative was retained as part of the capping option presented above for further analysis.

Vitrification

Vitrification is a solidification technique that involves heating contaminated soils or mine spoil material by various means to the point of producing a melt that hardens into a glasslike material. The vitrified material has very low permeability, is resistant to weather, and meets Toxicity Characteristic Leachate Procedure (TCLP) criteria. Heating methods include natural gas-fired burners, electric current, and plasma torches. The vitrification processes reduce the volume of the treated material by 25 to 35 percent. Vitrification is best suited for wastes that are difficult to treat, such as mixed wastes. A significant advantage to vitrification is that organic contaminants are oxidized by the high temperatures employed. A disadvantage is the possible need for emission control for waste gases (Adriano 2001).

Vitrification would be effective in reducing the mobility of site contaminants present in waste rock. Due to high capital costs, this technology is more applicable to sites with contaminants that are difficult to treat. This technology was eliminated from further consideration.

Soil Mixing

Description: Soil is mixed with neutralizing agents to raise the pH and reduce the mobility and bioavailability of metal contaminants.

Screening: Soil mixing and treatment with lime, organic matter, and fertilizer was used on soils left in place during the Removal Action. These soils may contain residual contamination. Soil mixing does not remove contaminants from the site but can be highly effective in reducing the long-term mobility of metal contaminants if the appropriate soil amendments are used. Soil mixing is moderately implementable at the remaining waste rock piles due to terrain and access and has low to moderate construction and O&M costs.

Based on high effectiveness, easy to moderate implementability, and low to moderate costs, soil mixing was retained for further analysis.

3.2.4.2 Chemical Treatment Technologies

Chemical water treatment technologies are based on reactions between species that allow separation of the metal contaminants and water. Examples of chemical treatments include chemical precipitation, ion exchange, and oxidation.

Chemical Precipitation

Description: Chemical precipitation occurs when a reaction between two substances in a liquid solution produces a solid product. The solid product can be removed from the liquid by gravity separation, filtration, or other methods. Chemical precipitation is the most common method for removing metals from acid mine drainage/discharge and is reliable, effective, and cost-effective. A neutralizing agent is used to increase the solution pH, causing the formation of metal hydroxide, metal carbonate, or metal sulfide precipitates, depending on the neutralization agent used. Chemical precipitation may be used in an active or semi-passive treatment system. In a typical active treatment system, the neutralizing agent is hydrated and/or slurried (if necessary), then added to the influent water. A flocculent may be added to improve the settling characteristics of the sludge. The treated water is sent to a settling basin/clarifier/thickener to allow settling of the precipitates. Other separation processes, such as a ceramic micro-filtration system or other filtration techniques, may be used for separation. Water is generally discharged from the top of the tank, and sludge discharged from the base. Sludges often have high water content that increases the cost of sludge handling and disposal. A filter press can be used to increase the sludge solids content. Depending on effluent requirements, a polishing stage may be used in conjunction with precipitation. Oxidation of iron and/or manganese into forms that are more easily precipitated may be done either before or after addition of the neutralization agent.

Two semi-passive chemical precipitation systems which could be used to treat contaminated water at the site are anoxic limestone drains or open limestone channels. An anoxic limestone drain (ALD) is a trench filled with crushed high-calcium limestone (calcium carbonate ($CaCO_3$)), sealed with geotextile or plastic, and covered with clay or soil to prevent oxygen inflow. As the acidic water flows through the ALD, the acid dissolves some of the limestone, which adds alkalinity to water and raises the pH. Metals precipitate as carbonates; iron and aluminum precipitate on and coat or armor the limestone reducing the limestone's reactivity and the permeability of the system. This technology is applicable where influent water has less than 2 milligrams per liter (mg/L) dissolved oxygen and ferric iron (Fe^{+3}) is less than 10 percent of the total iron. An open limestone channel technology is a variant of ALD technology and is used to treat discharges that are oxygenated and contain ferric iron (Fe^{+3}) or high aluminum content. Open limestone channels, like ALDs may be subject to armoring by iron and aluminum precipitates. Steep slopes help to keep armoring from occurring. ALDs may not be effective at zinc removal because limestone has slow reactivity (EPA 2005). A sludge settling pond would be required to prevent the precipitated metals from entering Elk Creek and potentially redissolving.

Another semi-passive application of chemical precipitation involves the collection of adit water in a channel or piping. A neutralizing agent is automatically added to the channel or pipe based on water flow rate and water chemistry.

Screening: Chemical precipitation is the default treatment for mine impacted waters. Chemical precipitation followed by a separation system is effective in removing metals from waters containing high concentrations of metal

contaminants. The implementability of chemical precipitation is dependent on the type of system installed. Year-round access to the site to operate any active treatment process would be difficult and costly. Semi-passive systems can require less "hands on" maintenance but are generally less reliable and less proven for long-term use in harsh climates. The cost of installing and operating a chemical precipitation system can be moderate to high with the highest costs typically due to the long-term O&M of the system.

Due to the presence of a nearby chemical precipitation facility, the precipitation process will be retained for further evaluation in conjunction with diversion or piping of the adit discharge to the Mt. Emmons Project WTP. An active or semi-passive chemical precipitation system at the site was not retained for further analysis because year-round access to the site to operate any active treatment process would be difficult and costly.

Ion Exchange

Description: Ion exchange is a chemical process involving the reversible exchange of ions between a liquid and a solid. Ion exchange substrates, such as ion exchange resins and zeolites, can be used to remove unwanted ions from a liquid and substitute more acceptable ions, most commonly sodium, potassium, calcium, and chloride. The substrate is then regenerated, usually with a dilute acid. The regeneration solution and spent ion exchange substrate must be discarded. Total dissolved solids concentrations are not decreased in this process, but the composition of the dissolved solids is changed. Ion exchange works best on dilute solutions, and would most probably be part of a polishing stage for high contaminant concentration waters.

Screening: Ion exchange would remove dissolved contaminant ions but would need to be combined with other unit processes to be effective for the high concentrations of metal contaminants at the site. Operation of an ion exchange system would be difficult in the remote environment of the Standard Mine. Year-round access to the site to operate any active treatment process would be difficult and costly. The cost would be high.

Based on difficult implementability, high cost, and the availability of more proven, effective technologies for treating mining impacted waters, this alternative was eliminated from further consideration.

Oxidation

Description: Oxidation can be used to precipitate iron and manganese hydroxides and can be used as pre-treatment to form more readily precipitated forms of metals such as iron or chromium. Chemical oxidation uses oxidizing agents such as potassium permanganate, hydrogen peroxide, hypochlorites, chlorine, or chlorine dioxide. Aeration can also be used to facilitate oxidation. Oxidation can be inhibited by the pH drop associated with the formation of metal hydroxides. Oxidation alone is generally not effective in removing cadmium, copper, manganese, or zinc to concentrations below discharge criteria.

Screening: This process is not effective in treating the site contaminants without being part of an active water treatment system. Year-round access to the site to operate any active treatment process would be difficult and costly. Due to the

limited effectiveness and difficult implementability, this alternative was eliminated from further consideration.

Electrochemical Processes

Description: An electric current is applied to electrodes submerged in the liquid solution and metals are deposited on the cathode or precipitate from solution. The precipitate sludge and the acid solution used to periodically regenerate the electrodes must be disposed of. This process is most commonly used in gold production. In water treatment, it is most commonly used for the reduction and precipitation of hexavalent chromium, but can also be used to remove arsenic, cadmium, molybdenum, aluminum, zinc, and copper ions from water. Electrowinning and electrocoagulation are specific examples of electrochemical processes.

Screening: Year-round access to the site to operate any active treatment process would be difficult and costly. Due to the difficult implementability and the availability of more proven, effective technologies for treating mining impacted waters that are not known to contain the significant quantities of precious metals required to make this technology cost effective, this alternative was eliminated from further consideration.

Chemical soil treatments can include addition of lime or phosphate amendments to immobilize metals and allow establishment of a vegetative cap.

Lime and Fertilizer Soil Treatment

Lime is added in a quantity sufficient to neutralize the active and potential acidity of the soil. Phosphate fertilizer can be used to further immobilize the metal contaminants. Organic soil amendments can be added to reduce metal mobility and allow establishment of a vegetative cap that can serve to reduce exposure of humans and ecological receptors to site contaminants. Soil mixing is generally used to incorporate the amendments into the soil.

Screening: Treatment of waste rock with lime, fertilizer, and organic amendments does not remove the contaminants from the soil but can be effective in reducing contaminant mobility. The technology is easily implemented at the site. Addition of chemical soil treatments and long-term monitoring and O&M has a low to moderate cost. This technology was retained for further analysis.

3.2.4.3 Biological Treatment Technologies

Biological treatment is based on reactions of organic substrate. The organisms may be used to directly or indirectly treat the metals. Direct treatment is when a biological reaction with the organic substrate facilitates metal ion removal from the contaminated water. Indirect treatment is when the biological reaction is used to form products that remove metal ions from the contaminated water.

Organic substrates can be used as adsorption and ion exchange media as described above. Regeneration of organic substrates can be unpredictable and problematic in continuous flow situations.

Aerobic Wetlands

Description: Aerobic wetlands are typically shallow excavations with one to two feet of soil, gravel, and/or rocks in a hummocky pattern. The designed hummocks allow for variations in water depth of between one inch and approximately one foot to form a diversity of microenvironments. Aerobic wetlands are often constructed as a series of terraced cells with intermediate spill points and typically contain planted areas and open water zones. Iron and manganese oxidation, precipitation, and sorption to biomass occur in the wetland. Periodic removal of precipitate and wetland reestablishment is required. This alternative is ineffective for zinc removal because the pH is typically too low to allow the formation of zinc hydroxide and requires a relatively large land area.

Screening: Aerobic wetlands are not effective in treating zinc, one of the primary metal contaminants, but could be effective as a secondary treatment or polishing process following a primary treatment process. Wetlands are moderately implementable at the site. Wetlands are easily constructed but given the harsh environment at the Standard Mine site, wetland vegetation may take several years to become well established. Costs in installing and maintaining aerobic wetlands are low to moderate.

Based on moderate effectiveness and implementability and low to moderate costs, aerobic wetlands will be retained for further evaluation as a secondary process in a passive water treatment system.

Existing wetlands that are located downstream of Level 5 and Level 98 likely fill this function for waters discharged from the Level 5 and Level 98 adits. These wetlands may be used as “treatment” for the Level 5 and Level 98 adit discharges without additional construction or O&M efforts.

Biochemical Reactors

Description: Anaerobic wetlands and sulfate reducing bioreactors are considered biochemical reactors (BCRs). Organic material consisting of hay, manure, and wood chips along with limestone, referred to as substrate, are placed into a lined pond. Decomposition of the organic material consumes dissolved oxygen present in adit discharge water and creates an anaerobic environment. Sulfate reducing bacteria convert sulfate present in the influent water into sulfide that reacts with dissolved metals to form metal sulfides. Metal sulfides are insoluble in water and therefore precipitate within the substrate. Water alkalinity is increased due to dissolution of limestone substrate and sulfate reduction, enhancing precipitation of metal hydroxides. Metals are also sorbed to the metal hydroxides and organic substrate, further increasing the effectiveness of the BCR.

BCRs are effective in aluminum, cadmium, copper, lead, silver, and zinc removal, moderately effective at iron removal, but largely ineffective in manganese removal. Factors that affect the performance of BCRs include flow rate, temperature, water chemistry, substrate composition, development of preferential flow paths, and variations in influent water flow rate and water chemistry. An aeration pond, channel, or aerobic wetland may be installed to retain the BCR effluent and provide time for those sulfides that have not reacted to oxidize and avoid potential impacts on the receiving stream. A manganese

removal bed (MRB) could be considered if manganese removal is required. Limited available land surface may be an obstacle in the construction of an MRB.

The use of BCRs in a high altitude harsh climate is an evolving practice. The EPA Office of Research and Development (ORD) initiated a pilot at the Standard Mine site to determine BCR performance in a harsh climate during winter months. Preliminary results indicate that removal efficiency for cadmium, copper, lead, and zinc range from 97 to 99 percent (Golder 2009a). Manganese removal efficiency was minimal because a manganese removal bed was not part of the pilot system.

Screening: A BCR can be effective in reducing metals concentrations in adit discharge water. Long-term performance data are not available for systems operated at similar conditions, but the pilot study indicates that a BCR system is implementable and effective at removing cadmium, copper, lead, and zinc from the Level 1 adit discharge water. The capital and O&M costs are moderate.

Due to potentially high effectiveness, easy to moderate implementability, and moderate capital costs, a BCR will be retained for further analysis.

Successive Alkalinity Producing Systems

Description: Successive alkalinity producing systems (SAPS) are an innovative technology that is a variant of the anaerobic systems. Water flows vertically through layers of limestone and anaerobic organic material with alkalinity added and sulfate reduction resulting in the precipitation of metal sulfides. Organic substrate requires periodic replacement. The chemical processes involved in the SAPS are largely the same as in BCRs; however, SAPS lack the substrate porosity and permeability provided by the wood chips that are included in BCRs and are therefore seen as a less satisfactory alternative compared to biochemical reactors.

Screening: Due to an unfavorable comparison to the BCR option with regard to effectiveness, SAPS was not retained for further consideration.

Phytoremediation

Description: Phytoremediation is an emerging technology in which vegetation is used to extract inorganic contaminants from soil or water. The technology requires a long residence time for the water to contact the vegetation.

Screening: Due to the harsh climate and the long residence time requirements, this technology will not be considered for treatment of the Level 1 adit discharge.

3.2.5 Removal and Disposal

Excavation

Description: Contaminated material could be excavated, transported to another location, and disposed. The other location may be an on-site repository or a permitted disposal facility.

Screening: Removal and disposal were evaluated in the Standard Mine EE/CA (URS 2007; URS Operating Services (UOS) 2007). During the EE/CA process, it was determined that removal and disposal would be implemented for waste rock at Levels 1, 2, and 3. Removal and disposal of the waste rock at Levels 4, 5, and 98 was considered but rejected because of their location relative to sensitive wetlands, the impacts of access road improvements necessary to implement the removal, the relative size of the waste rock piles, and the limited impacts from the waste rock. The waste rock at Levels 1 through 3 was removed and taken to a nearby repository that was subsequently completed and closed. Additional waste rock removal will not be considered at this time.

3.2.6 Re-Use

Construction or Mining Material

Description: The waste rock or remaining sulfide ores could be removed and utilized as a mining and/or construction product. Typical mining techniques could be implemented to remove zones of the sulfide ore that are major contributors to contamination.

Screening: The remaining waste rock at the site is primarily overburden unlikely to contain significant quantities of precious metals and is not suitable for mineral re-processing. The material is not particularly suitable for construction purposes and could contribute to contamination of site waters at its final destination. Moving the waste rock to another location without ensuring it is fully contained and isolated from water would be effective in reducing risk at the Standard Mine location but would not be effective in reducing overall environmental risk. Given the potential for continued leaching of metals from the waste rock, the environmental value or effectiveness of transporting the waste rock for use in construction at another location is low. Continued excavation of ore from sulfide-producing portions of the mine workings either for profit or as a remedial measure is not seen as cost effective due to high startup and operating costs and the likely low effectiveness in reducing metal discharges from the site.

3.3 SELECTION OF TECHNOLOGY TYPES AND PROCESS OPTIONS

The remedial technologies and process options were screened in Section 3.2 to eliminate options that are not technically implementable. Technologies and process options that could not be implemented due to factors such as the contaminants of concern, contaminant levels or media, or site conditions were eliminated from further consideration. The screening of technologies and process options has been summarized in Tables 3-1 and 3-2. The remaining technologies and process options were then retained for the development of alternatives in Section 4.

3.4 PILOT STUDIES

Pilot studies were conducted to determine the applicability of technologies to the Standard Mine site and to assist in developing a detailed evaluation of the alternatives. A passive water treatment pilot study and a soil treatment and revegetation pilot study were conducted. A mixing study and a toxicity test study were performed to supplement the findings of the passive water treatment pilot study. These four studies are described in the following sections.

3.4.1 Passive Water Treatment Pilot Study

The BCR technology was pilot tested at the Standard Mine site to determine the applicability of the technology to a high altitude, remote site that experiences harsh

winter weather and to evaluate site-specific treatment effectiveness and operating parameters.

Passive treatment systems have been widely employed to treat mining impacted water (MIW) over the past 20 years at multiple sites across the U.S. and abroad (Gusek and Wildeman 2002). More specifically, the BCR technology has been effective at treating metal-laden MIW via biological reduction of sulfate and removal of metals as metal sulfide precipitates (Gusek 2002). As with any biological process, the rate of microbial treatment is dependent on temperature. Although significant research has been completed on BCR treatment performance, there has been limited distribution of information on cold-weather performance of BCRs. Hence, one of the goals of the pilot study was to document the performance of a BCR in a high-altitude environment with a cold climate. Other goals of the pilot study were to determine the effectiveness in removing metals from the Level 1 adit discharge and to determine the correct site-specific loading rate that could be used for design of a full-scale bioreactor for the site. The treatment goal for the pilot test was to reduce the site contaminants to levels below the applicable standards.

In 2007, a one gallon per minute (gpm) pilot-scale BCR designed to treat water discharging from the Level 1 adit was constructed at the site. Golder Associates designed, maintained, monitored, and evaluated the pilot system (Golder 2009a). During 2008, an Aerobic Polishing Cell (APC) and a Chitorem™ Reactor (Chitorem™) were added to the system. The ChitoRem™ unit was a late addition to the pilot scale system when it was decided that there was not adequate space to install an appropriately-size manganese removal bed that had been part of the initial design. ChitoRem™ is used for the bioremediation of a broad range of constituents including chlorinated solvents, metals, and mining influenced waters (Korte et al. 2008). Similar to the BCR technology, ChitoRem™ can be placed in a flow through reactor which should subsequently create anaerobic conditions conducive to sulfate reduction and metal removal. ChitoRem™ has also been shown to be effective at manganese removal (Venot et al. 2008). The ChitoRem™ reactor is an emerging technology whose chemical reactions and manganese removal mechanisms are not completely understood. Unlike the BCR technology, the use of ChitoRem™ to treat MIW has only begun to receive attention over the past several years and long-term treatment performance has not been documented.

The pilot study, still in operation as of December 2009, consists of a flow delivery system, a BCR cell, APCs, and a dedicated automatic sampling and field data collection system. Operation of the ChitoRem™ reactor was discontinued in summer 2009 due to operational difficulties and has not been re-started. A description of each design element is given below. A schematic of the pilot system layout is provided as Figure 3-1. The ChitoRem™ reactor is shown on the figure as “Chitin”. Details of the passive treatment system construction, monitoring, and performance evaluations have been published under separate cover (Golder 2009a; Reisman 2008; Reisman 2009).

- **BCR** – The BCR resembles a bermed pond and operates as a vertical-flow reactor. The BCR contains a limestone-buffered organic substrate that is a mixture of organic materials (hay, wood chips, sawdust), fine-grained limestone, and a bacterial inoculum (cow manure). This unit has a total bottom area of about 168 square feet and was constructed and began operation in August 2007. The BCR cell contains treatment media in a uniform layer approximately 3 feet thick. The BCR effluent can be distributed between the APC and the Chitorem™ reactor.

- **APC** – This component is comprised of a series of free water surface ponds for the aeration of BCR effluent and the removal of excess biochemical oxygen demand (BOD). The APC was completed in September 2008. The APC receives BCR effluent water and discharges to the hillside above Elk Creek.
- **Chitorem™ Reactor** – This unit was constructed in July 2008 to provide manganese removal. The ChitoRem™ used in the testing was the SC-20 product which is largely composed of crab-shell chitin. The material is about 20% chitin (general formula $C_9H_{15}O_5N$), 40% limestone ($CaCO_3$), and 30% protein. The Chitorem™, which runs parallel to the APC, receives BCR effluent water and discharges to Elk Creek. As shown in Figure 3-1, the Chitorem™ is plumbed in parallel to the APC.

The pilot system influent is collected in a small concrete catch basin in the Standard Mine portal just downstream of an existing flume. The water is conveyed via two buried, two-inch diameter high density polyethylene (HDPE) pipes to a buried 400-gallon capacity surge tank equipped with two six-inch polyvinyl chloride (PVC) overflow pipes. To this point, all flows are by gravity. A 12-volt electric submersible pump periodically pumps from the surge tank to deliver, on average, about 1 gpm to the BCR. Once the pumped influent water enters the BCR, all flows to the APC and Chitorem™ are by gravity.

The pilot system was designed with a satellite link to transmit influent and effluent field parameters at 15 minute intervals throughout the winter. Additionally, automated samplers were used to collect weekly influent and effluent water samples throughout the winter.

Monitoring data from 2007 through 2008 indicate the BCR effluent is characterized by a negative oxidation-reduction potential (ORP), a pH of about 6.2 (except during spring flow conditions), and elevated concentrations of alkalinity, sulfide, biochemical oxygen demand (BOD), and E. coli. (Golder 2009a). Metal removal rates for cadmium, copper, lead, and zinc during 2007 to 2008 were greater than 98% and were typical for the BCR treatment technology (Gusek et al. 2008). Preliminary results from 2009 indicate that similar or greater metal removal percentages continue to be achieved. Flow to the cell has been maintained approximately 80 percent of the time. Interruptions in flow were due to power failure, pump failure, and pipe clogging. A full-scale treatment system could be designed to eliminate these points of failure by eliminating the need to pump the water (design the system to operate entirely on gravity flow) and including a sedimentation basin before the BCR to eliminate clogged process units (Golder 2009a).

Despite a lack of long-term performance history for similar systems, the pilot-scale passive treatment system (PTS) performance has demonstrated that a PTS is feasible at cold, remote sites. Despite the high removal rate, however, the BCR effluent exceeds the stringent water quality standards for cadmium, lead, and zinc (Golder 2009a).

3.4.2 Mixing Study

The mixing of organic-laden water such as BCR effluent with MIW, also known as co-treatment, is effective in removing metals from the MIW and destroying pathogens and reducing residual nutrients and sulfide in the BCR effluent (Stosnider et al., 2009; Gusek et al., 2008). The term co-treatment implies that each water source provides treatment of the other water source in a mutually beneficial process; the BCR effluent treats the MIW by removing metals via metal sulfide precipitation and sorption to organic matter while

the MIW treats the BCR effluent by removing sulfides, diluting residual nutrients (i.e., BOD, ammonia, and phosphorus), and destroying pathogens (e.g., *E. coli*) with acidity.

A bench-scale mixing study and subsequent continuous flow tests were conducted by Golder Associates to determine the amount of raw MIW that can be mixed with BCR effluent water and still be effectively treated. Additional goals of the mixing study were to recommend a detention time and sludge generation rate for design of a mixing pond or similar system component. Multiple ratios of MIW and BCR effluent water were mixed and then samples of the resulting water were analyzed for a suite of parameters, including the constituents of concern, alkalinity, and sulfide to determine an effective mixing ratio (Golder 2009b).

The 1.5BCR:1MIW mixture achieved metal removal rates greater than 95% for cadmium, copper, lead, and zinc. The removal rate is specific to the mixing process and should not be confused with metal removal in the BCR. As the mixing ratio decreased (i.e., less BCR and more MIW), the removal rates also decreased. In the 1BCR:1MIW sample, the metal removal rates decreased to approximately 90% for cadmium, copper, lead, and zinc. The predominant metal removal mechanism is likely metal sulfide precipitation as sulfide was also removed in the mixing process. BOD concentrations decreased from concentrations observed in the BCR effluent primarily due to dilution with the MIW. The chemical reaction time was determined to be relatively short as removal rates did not increase in samples collected after approximately four hours. Sludge generation testing was not conclusive due to the minute amount of sludge generated. Due to the uncertainty of these test results, additional sludge generation testing was recommended. For preliminary design purposes, conservative estimates of a 12 hour minimum detention time and sludge generation rate of 0.3 milliliters (mL) sludge per 1 L of treated water were used. The results of the mixing study were used in the conceptual design of the full-scale passive treatment system (Golder 2009b).

3.4.3 BCR Effluent Toxicity Testing

Adit discharge samples, samples from the BCR, and samples from the APC effluent were collected and shipped to The McConnell Group (TMG) at the U.S. EPA Laboratory in Cincinnati, Ohio. A series of acute aquatic toxicity tests with *Pimephales promelas*, the fathead minnow, and freshwater invertebrates *Ceriodaphnia dubia* and *Daphnia magna* were conducted with these samples. The purpose of these tests was to establish the level of toxicity for the discharge from the mine site and to evaluate the effectiveness of the treatment process currently being used at this site.

The results indicate that the treatment systems being used to remediate the waste from the site are working to remove toxicity to the *Ceriodaphnia dubia*. The BCR is only marginally effective in removing toxicity to *Pimephales promelas*, but the APC is removing toxicity to *P. Promelas* (The McConnell Group (TMG) 2009). The toxicity of the BCR effluent is likely due to residual nutrients (i.e., ammonia) or the sulfide generated by the treatment process. After the BCR effluent has been polished in the APC, the toxicity decreases.

3.4.4 Soil Amendment and Revegetation Pilot Study

Soil amendments such as lime, organic matter, and fertilizer can be a cost-effective means to stabilize contaminated soils with a vegetative cover and immobilize metal contaminants within the soil. A pilot study was conducted at Level 98 to evaluate the effectiveness of biosolids compost on immobilizing contaminants in site soils and

establishing a vegetative cover. The study was conducted by EPA's Environmental Response Team (ERT) and their Response, Engineering, and Analytical Contract (REAC) contractor. A laboratory-scale treatability study designed specifically for this site was completed in 2006. In July 2007, a pilot-scale field trial was initiated at Level 98 to validate the best treatments identified from the treatability study. Five treatments were tested at Level 98: 5 percent biosolids compost; 10 percent biosolids compost, 5 percent biosolids compost with N-P-K fertilizer, 10 percent biosolids compost (surface application), and control. Each plot (including the control plot) was also amended with 200 pounds of limestone per 1000 square feet of soil treated. The soils amendments were mixed approximately 6 to 18 inches into the soil with the exception of the surface application plot where no mixing occurred. The plots were watered after addition of the soil amendments and subsequently seeded with barley (60 pounds per acre) over half of each plot and transplanted native species plus native seed over the other half of each plot.

Soil samples collected during 2009 indicated the soil pH had stabilized in the plots that received both lime and compost but pH had not stabilized in the control plot where compost had not been added. This may indicate the application of compost in combination with the lime helped to buffer and maintain soil pH.

Plant success was evaluated in 2007 by measuring barley plant density and tiller development of the seeded barley. The study indicated that barley success was dependent on the plot treatment, with the least success in the control plot and more success in the treated plots. The barley plants were more successful in plots where the biosolids compost and lime amendments were tilled into the soil than in the surface application plot.

The transplants were evaluated in 2007 and 2008 by plant vigor, survival, and dry weights. Plants in the treated plots did equally well and better than plants that had been transplanted in the control plot that received lime but no compost amendment (REAC 2008). Plants in the 5 percent compost plots had higher dry weights than plants collected from the 10 percent compost plots. The study recommended a five percent biosolids application rate, by volume, and the use of transplanted native species for revegetation (Response, Engineering, and Analytical Contract (REAC) 2009). A specific lime amendment rate was not recommended because varying rates were not studied.

SECTION 3 FIGURES

FIGURE 3-1
Pilot-Scale Passive Water Treatment System Layout
(Provided by Golder Associates (Golder 2009a)

FIGURE 3-1

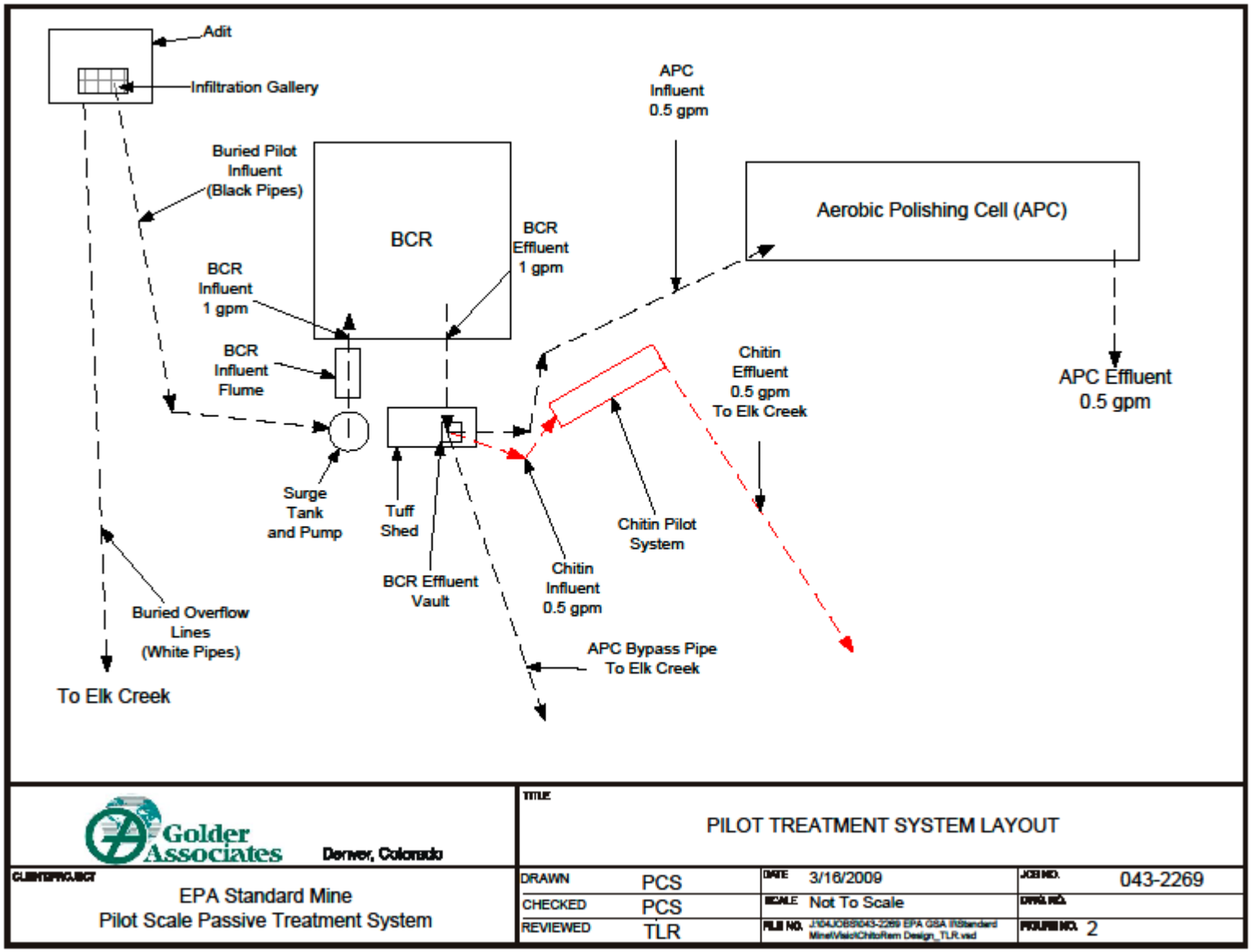
Adit
Infiltration Gallery
Buried Pilot Influent (Black Pipes)
BCR
BCR Effluent 1 gpm
APC Influent 0.5 gpm
Aerobic Polishing Cell (APC)
BCR Influent 1 gpm
BCR Influent Flume
Chitin Effluent 0.5 gpm To Elk Creek
APC Effluent 0.5 gpm
Surge Tank and Pump
Tuff Shed
BCR Effluent Vault
Chitin Pilot System
Chitin Influent 0.5 gpm
Buried Overflow Lines (White Pipes)
APC Bypass Pipe To Elk Creek
To Elk Creek
Golder Associates
Denver, Colorado
TITLE
PILOT TREATMENT SYSTEM LAYOUT
EPA Standard Mine
Pilot Scale Passive Treatment System
DRAWN PCS
CHECKED PCS
REVIEWED TLR
DATE 3/16/2009
SCALE Not To Scale
JOB NO. 043-2269
FIGURE NO. 2

TABLE 3-1
Initial Screening of Technologies and Process Options

General Response Actions	Remedial Technology	Process Options	Description	Screening Comments
No Further Action	None	Not Applicable	No Action.	Required for consideration.
Institutional Controls	Government Controls	Zoning, Permits	Zoning restrictions or ordinances would be used to restrict land use. These are typically enforced under local government.	Potentially applicable.
	Proprietary Controls	Deed Restrictions or Covenants	Deed restrictions convey a restriction from a property owner to subsequent owner. An Environmental Covenant is an enforceable agreement between the state and a property owner. It is binding on subsequent landowners.	Potentially applicable.
	Enforcement Tools	Administrative Orders or Consent Decrees	Administrative Orders or Consent Decrees can be used to compel a landowner to restrict certain site activities. These are not necessarily binding on future landowners.	Potentially applicable.
	Informational Devices	Fencing, Deed Notices, Advisories	Informational tools would notify the public of potential hazards. Fencing could be installed to limit access to specific areas.	Potentially applicable.
	Monitoring	Surface Water Monitoring	Periodical sampling of surface waters in Elk Creek and Coal Creek would be conducted to monitor changes in surface water contamination.	Potentially applicable.
		Groundwater Monitoring	Periodical sampling of groundwater in an area surrounding the workings would be conducted to monitor changes in groundwater contamination.	Potentially applicable.
Collection	Extraction	Surficial Extraction Wells (Vertical)	Vertical wells could be installed around the perimeter of the mine and pumped to extract groundwater before it reaches the workings.	Potentially applicable.
		Surficial Extraction Wells (Sub-horizontal)	Sub-horizontal wells could be installed at target elevations and gravity drained to extract groundwater before it reaches the workings.	Potentially applicable.
		Underground Extraction Wells	Sub-horizontal wells could be installed within the workings and gravity drained to intercept groundwater before it reaches the lower levels of the workings.	Potentially applicable.
	Collection	Ponds	Collection of mine discharge, seepage, and/or surface flow to facilitate piping, pumping, and/or treatment.	Potentially applicable.
Diversion	Horizontal/Vertical Barriers	Diversion Channels	Construction of channels to direct surface water away from the workings prior to infiltration into the workings and interaction with contaminating materials.	Potentially applicable.
		Interceptor Trenches	Open trenches excavated across groundwater flow paths to cut-off flow, limiting further migration of clean and/or affected water.	Not feasible because of bedrock at or near the surface.
		French Drains	A perforated pipe installed in a granular backfilled trench to collect groundwater.	Not feasible because of bedrock at or near the surface.
		Grout Curtain	Vertical, low-permeability barrier constructed as a subsurface wall to impede groundwater flow.	Not feasible because of fractured controlled flow within bedrock.
		Pressure Grouting	Pressurized injection of grout through small diameter drill holes to reduce groundwater flow through a target zone.	Potentially applicable.
		Slurry Wall	A slurry or concrete backfilled excavation that acts as a low permeability, subsurface wall to impede groundwater flow.	Not practical because of high strength bedrock at or near the surface.
		Flowable Fill	Self-compacting, low-strength, self-leveling material with a flowable consistency used as an alternative backfill material to granular fill. Can be placed as a low-permeable vertical barrier to flow.	Potentially applicable.
		Polyurethane Foam Fill	An impermeable two part liquid to solid foam system specifically designed for use in sealing mine workings such as raises, winzes, ore chutes, shafts, etc.	Potentially applicable.
		Concrete	Formed concrete placed in specific locations within mine workings to act as a barrier to flow. Locations such as shafts, raises, winzes, etc. could be targeted.	Potentially applicable.
		Shotcrete	Pneumatically placed concrete over areas of high permeability and/or low strength such as highly fractured zones or soil like zones that may act as flow pathways or may be structural unsound.	Potentially applicable.

Note: 1) Technologies and process options that have been screened out are designated with shading:

TABLE 3-1
Initial Screening of Technologies and Process Options

General Response Actions	Remedial Technology	Process Options	Description	Screening Comments
Containment	Capping	Clayey Soils	Compacted clayey soils placed over areas of contamination.	Potentially applicable.
		Shotcrete	Pneumatically placed concrete over areas of contamination.	Potentially applicable.
		Concrete	Installation of a concrete slab/wall over areas of contamination.	Potentially applicable.
		Multimedia Cap	Clayey soil and synthetic membrane combination placed over areas of contamination.	Potentially applicable.
	Bulkhead	Impermeable	Construction of a bulkhead within the mine workings to capture contaminated discharge within the workings.	Potentially applicable.
		Flow-Through	Construction of a bulkhead and outlet piping within the mine workings to impede and regulate flow of contaminated discharge.	Potentially applicable.
Treatment	Physical – Water	Filtration	Separation of suspended solids from a liquid by passing the mixture through a porous medium that allows water to pass but retains solids.	Not feasible due to limited winter site access for an attended treatment facility.
		Membrane Processes/ Reverse Osmosis	Pressure induced ionic separation. Specific ions are separated depending what type of membrane is utilized.	Not feasible due to limited winter site access for an attended treatment facility.
		Sedimentation/Clarification	Separation of suspended solids from water by gravity settling.	Potentially applicable.
		Carbon Adsorption	Charcoal or activated carbon are used to adsorb (or exchange) metal ions as water is passed through them.	Not feasible due to limited winter site access for an attended treatment facility and high metal concentrations.
		Evaporation	Metals are separated by natural evaporation ponds or heat induced evaporation.	Not feasible due to climate and space restrictions.
		Solvent Extraction	Transfer of metal ions from the contaminated water to an organic liquid due to preferential ion bonding. The organic liquid is stripped of metals using sulfuric acid and recycled.	Not feasible due to limited winter site access for an attended treatment facility.
	Physical – Soil	Encapsulation	Chemical treatment of soils to coat contaminated soils, reducing the mobility of contaminants.	Potentially applicable.
		Vitrification	Direct current is used to heat contaminated materials and fuse them into a solid form, thus reducing the mobility of contaminants.	Potentially applicable.
		Soil Mixing	Soil is mixed with neutralizing agents to raise the pH and reduce the mobility of metal contaminants.	Potentially applicable.
	Chemical – Water	Chemical Precipitation	Solid materials are precipitated due to introduction of under-saturated elements into contaminated waters.	Potentially applicable.
		Ion Exchange	Ion exchange substrates, such as ion exchange resins and zeolites, can be used to remove unwanted ions from a liquid and substitute more acceptable ions, most commonly sodium, potassium, calcium, and chloride.	Not feasible due to limited winter site access for an attended treatment facility.
		Oxidation	Addition of oxygen to induce precipitation of iron and manganese hydroxides.	Not feasible due to limited winter site access for an attended treatment facility.
		Electrochemical Processes	An electric current is applied to electrodes submerged in the liquid solution and metals are deposited on the cathode or precipitate from solution.	Not feasible due to limited winter site access for an attended treatment facility.
	Chemical – Soil	Soil Amendments	Addition of lime or phosphate amendments to immobilize metals and allow establishment of a vegetative cap.	Potentially applicable.

Note: 1) Technologies and process options that have been screened out are designated with shading:

TABLE 3-1
Initial Screening of Technologies and Process Options

General Response Actions	Remedial Technology	Process Options	Description	Screening Comments
Treatment (continued)	Biological – Water	Aerobic Wetlands	Typically shallow excavations with one to two feet of soil, gravel, and/or rocks in a hummocky pattern, which stimulates oxidation, precipitation, and sorption of iron and manganese into the biomass.	Potentially applicable.
		Biochemical Reactors	A lined pond containing organic material and limestone functions to decompose organic material to consume dissolved oxygen present in the water. In the anaerobic environment, sulfate reducing bacteria convert sulfate present in the influent water into sulfide which reacts with dissolved metals to form metal sulfides that precipitate within the substrate. Water alkalinity is increased due to dissolution of limestone substrate and sulfate reduction, enhancing precipitation of metal hydroxides.	Potentially applicable.
		Successive Alkalinity Producing Systems	Water flows vertically through layers of limestone and anaerobic organic material with alkalinity added and sulfate reduction resulting in the precipitation of metal sulfides.	Potentially applicable.
		Phytoremediation	Emerging technology in which vegetation is used to extract inorganic contaminants from water.	Not feasible due to climate and space restrictions.
Remove and Disposal	Extraction	Excavation	Contaminated material could be removed and disposed at another location. The other location may be an on-site repository or a permitted disposal facility.	Potentially applicable.
Re-use	Reprocess	Excavation and Reprocessing	The remaining sulfide ores could be removed and utilized as a mining product. Typical mining techniques could be implemented to remove zones of the sulfide ore that are major contributors to contamination.	Most of the remaining waste rock/ore is unlikely to contain significant quantities of precious metals and is not suitable for mineral processing.
	Reuse	Excavation and Transport	The remaining waste rock could be removed and utilized as a construction product.	There is a limited amount of uncontaminated waste rock at the site so the usefulness of this option is limited.

Note: 1) Technologies and process options that have been screened out are designated with shading:

TABLE 3-2
Secondary Screening of Technologies and Process Options

General Response Actions	Remedial Technology	Process Options	Effectiveness	Implementability	Cost
No Action	None	Not Applicable	Does not achieve remedial action objectives.	None.	None.
Institutional Controls	Institutional Controls	All Options	Does not achieve remedial action objectives but may be useful for implementation of other actions.	Easy to difficult depending on cooperation of landowners.	Low capital, low O&M.
	Monitoring	Surface Water Monitoring	Useful for documenting conditions. Does not reduce contamination.	Easily implemented when site is accessible.	Low capital, low O&M.
		Groundwater Monitoring	Useful for documenting conditions. Does not reduce contamination.	Easily implemented when site is accessible.	Low capital, low O&M.
Collection	Extraction	Vertical Extraction Wells	Effective for dewatering a zone if bedrock fracture system is sufficiently intercepted.	Easily implemented.	Low to moderate capital, moderate to high O&M.
		Sub-Horizontal Extraction Wells	Effective for drawing water if bedrock fracture system is sufficiently intercepted.	Construction moderately difficult in adit requiring smaller drilling equipment.	Low to moderate capital, low to moderate O&M.
	Collection	Ponds	Effective when flow rates and storage duration is known to estimate required capacities.	Easily implemented with standard construction equipment.	Low capital, low O&M.
Diversion	Horizontal/Vertical Barriers	Diversion Channels	Effective for diverting surficial water away from the contaminating materials, mine workings, geologic features, and/or remedial facilities.	Easily implemented with standard construction equipment assuming borrow material readily available.	Moderate capital, low O&M.
		Pressure Grouting	Effective when targeting potential flow pathways such as highly fractured zones.	Implementation moderately difficult in adit requiring smaller equipment.	Moderate capital, low O&M.
		Flowable Fill	Effective as a vertical barrier, susceptible to cracking but has self-healing properties.	Easily implemented.	Moderate capital, low O&M.
		Polyurethane Foam Fill	Effective as a horizontal and vertical barrier. Susceptible to some leaking along side joints if not properly installed.	Easily implemented once safety precautions (ventilation, heat concerns, etc.) have been addressed.	High capital, low O&M.
		Concrete	Effective as a horizontal and vertical barrier. Susceptible to weathering, cracking, and chemical degradation.	Moderately to highly difficult to implement due to the constraints of construction within the workings.	Very high capital, low to moderate O&M
		Shotcrete	Effective as a horizontal and vertical barrier, but susceptible to cracking.	Easily implemented.	Moderate capital, high O&M.
Containment	Capping	Clayey Soils	Effective, susceptible to cracking, but has self-healing properties. Limited material availability near the mine site.	Construction difficult in adit requiring hand placement and compaction efforts.	High capital, low-moderate O&M.
		Shotcrete	Effective but susceptible to weathering, cracking, and chemical degradation.	Easily implemented.	Moderate capital, high O&M.
		Concrete	Effective but susceptible to weathering, cracking, and chemical degradation.	Construction difficult requiring formwork and associated concrete anchoring.	High capital, high O&M.
		Multimedia Cap	Effective, least susceptible to cracking.	Construction difficult in adit requiring hand placement and compaction efforts.	High capital, moderate O&M.
	Bulkhead	Impermeable	Effective as a horizontal barrier. Potential for breakout and development of alternative seepage pathways.	Moderately difficult to construct within underground mine workings. Blockage would have to be removed first.	High capital, low O&M.
		Flow-Through	Effective as a horizontal barrier and flow regulator.	Moderately difficult to construct within underground mine workings. Blockage would have to be removed first.	High capital, moderate O&M.

Note: 1) Technologies and process options that have been screened out are designated with shading:

TABLE 3-2
Secondary Screening of Technologies and Process Options

General Response Actions	Remedial Technology	Process Options	Effectiveness	Implementability	Cost
Treatment	Physical – Water	Sedimentation/Clarification	Effective in separating solids from water. Would be applied in conjunction with another process to treat dissolved metals.	Easily implemented	Low to moderate capital, moderate O&M.
	Physical – Soil	Encapsulation	Moderately to highly effective in immobilizing soils.	Easily implemented.	Moderate capital, low O&M.
		Vitrification	Can be effective in immobilizing metal contaminants in soil.	Difficult to implement.	High capital, low O&M.
		Soil Mixing	Effective in reducing metal mobility but effectiveness depends on stability of treated soils.	Easily implemented. Long-term monitoring would be required.	Moderate capital, low O&M.
	Chemical – Water	Chemical Precipitation	Effective in reducing metal concentrations but achieving Water Quality Standards in the effluent stream may be difficult to achieve.	Difficult to implement at the site due to limited winter site access for an attended treatment facility. A semi-passive system could be applied but these have not been proven for long-term unattended use. Moderate implementability if a pipeline is constructed to carry water to the Mt. Emmons Project Water Treatment Plant (WTP).	For treatment at Mt. Emmons Project WTP: Moderate capital, moderate to high O&M.
	Chemical – Soil	Soil Amendments	Effective in reducing metal mobility but effectiveness depends on stability of treated soils.	Easily implemented.	Low to moderate capital, low to moderate O&M.
	Biological – Water	Aerobic Wetlands	Not effective as a stand-alone option.	Easy to moderate implementability.	Low to moderate capital, low to moderate O&M
		Biochemical Reactors	Effective in reducing cadmium, copper, lead and zinc concentrations. Not effective in manganese reduction.	Easy to moderate implementability.	Moderate capital, moderate O&M
		Successive Alkalinity Producing Systems	Less effective than a biochemical reactor.	Easy to moderate implementability.	Moderate capital, moderate O&M.
Remove and Disposal	Extraction	Excavation	Effective in reducing mobility of metals in soil.	Difficult for remaining waste rock piles due to limited access and potential impacts to wetlands.	Moderate capital, low O&M.

Note: 1) Technologies and process options that have been screened out are designated with shading:

4.0 DEVELOPMENT OF ALTERNATIVES

This section presents the development of alternatives retained after the initial screening. The alternatives are developed as conceptual designs. The designs are not for construction purposes. In some cases assumptions were made to facilitate a cost estimate and actual features may be different than those shown. The alternatives are compared against the required evaluation criteria in Section 5.

Typically, FS alternatives consist of combinations of technologies and processes that, when installed, allow the RAOs to be met. For the Standard Mine site, EPA, CDPHE, and USFS have indicated that a phased approach is preferred for implementing alternatives so that a better assessment of the effectiveness of each alternative can be made prior to performing additional actions. As a result, the individual alternatives presented here are not necessarily intended to serve as final remedies for addressing mine discharge, but as potential elements that will be combined as a final remedy. The alternatives presented here should be viewed as components of a toolbox from which the final Remedial Action will be built.

4.1 ALTERNATIVE 1 – NO FURTHER ACTION

Alternative 1 consists of no action in addition to the Removal Action activities that have been performed at the site.

4.1.1 Rationale for Inclusion of Alternative 1

As required by the NCP, the No Further Action alternative is included to provide a baseline against which other alternatives can be compared.

4.1.2 Alternative 1 Description

Implementation of the No Action alternative indicates that there are no plans for future control, containment, treatment, or removal.

4.2 ALTERNATIVE 2 – INSTITUTIONAL CONTROLS AND MONITORING

Alternative 2 consists of administrative or legal controls that could be used to limit land or resource use as determined necessary to protect human health and the environment. Institutional controls could be used alone or to improve the effectiveness or implementability of other alternatives.

4.2.1 Rationale for Inclusion of Alternative 2

Institutional controls alone would not be effective in reducing the flow of metal contaminants into Elk Creek and downstream water bodies but could be used to reduce human exposure to site risks. Institutional controls may be needed for implementation of other alternatives. For example, fencing and signs could be used to reduce the likelihood that a hiker could accidentally fall into a pond constructed as part of a passive water treatment system.

4.2.2 Alternative 2 Description

Government controls such as zoning restrictions or ordinances could be put in place to restrict land use at the site. These are often established and enforced under local government and not by EPA or the state, which has little control over enforcement and changes to or elimination of the restrictions.

The Colorado Environmental Real Covenants Act establishes the use of Environmental Covenants to ensure that a remedy remains protective of human health and the environment. The Environmental Covenant is an enforceable agreement between the state and a landowner. Environmental covenants are binding on subsequent property owners and therefore are considered reliable for long-term use.

Deed restrictions convey a restriction from a property owner to subsequent owners. Restrictions may be specified to ensure that the property is managed in a manner that protects human health and the environment.

EPA enforcement tools such as Unilateral Administrative Orders or Administrative Orders on Consent may be used to compel a landowner to limit certain site activities. A Consent Decree can be negotiated with landowners of private property to restrict site use. These tools are binding on the parties that sign the documents but not necessarily on future landowners.

Informational controls such as fencing, signage, guarded entry points signs, deed notices and advisories may be established. These are non-binding and are often used as a secondary control.

Monitoring of soil, surface water, groundwater, air, and environmental receptors could be performed to measure and track exposure and site conditions.

4.3 ALTERNATIVE 3 - PASSIVE WATER TREATMENT SYSTEM

Alternative 3 is a passive treatment system (PTS) that would be installed to reduce metal concentrations in contaminated water discharging from the Level 1 adit before it enters Elk Creek. The system could consist of up to five unit processes: a settling basin, a biochemical reactor, a mixing basin, an aerobic wetland, and an aeration channel. Five different PTS alternatives were developed for evaluation using four potential flow rates and from three to five of the unit processes.

The treatment systems proposed here are designed to treat Level 1 adit discharge. A PTS was evaluated in detail only for Level 1 because the Level 1 adit discharge has significantly higher flow rates and metals concentrations than the other adits. The diffuse flow that exits the Level 2 and Level 98 adits precludes water collection for treatment. The Level 5 adit discharge contains relatively low metal concentrations. Level 5 is situated at an elevation high within the basin in an area less suitable for the installation of a bioreactor. The elevation and snow pack would make access to the site difficult during a majority of the year. Shallow bedrock in the area would also make installation of the bioreactor more difficult.

Because there are assumptions associated with this alternative, the influent discharge water quality and flow rates should be re-evaluated prior to design of a full-scale PTS. If water treatment is performed in combination with other alternatives such as flowable fill and foam in Level 3, it is likely that the influent water quality would be significantly different and the design assumptions presented here would need to be reconsidered.

The development and evaluation of a passive treatment system (PTS) was performed by Golder Associates under contract to Pacific Western Technologies, Ltd. (Golder 2009c). The following sections summarize the Golder Associates report.

4.3.1 Rationale for Inclusion of Alternative 3

While containment and control options are likely to reduce the amount of water that is discharged from the Level 1 adit and potentially reduce the concentrations of metals in the adit discharge, those options may not reduce metal concentrations to a level that meets the ARARs without performing water treatment.

The remote location and limitations on site access during approximately half the year limit the possibility of operating an active water treatment system. Full-scale passive treatment systems are suited for sites with restricted access and without electricity. Based on the results of the pilot-scale passive treatment system at achieving significant metal removal from the Level 1 adit discharge, five variations of a full-scale PTS were included as Alternatives 3A through 3E.

4.3.2 Alternative 3 Description

The following sections present the design assumptions used in developing the five PTS alternatives, a description of each of the unit processes, and detailed development of each alternative.

4.3.2.1 PTS Design Assumptions

The treatment alternatives presented here are designed to treat Level 1 adit discharge based on the following assumptions.

Available Land Area
The land area available for the PTS was limited to the current disturbed area at Level 1. As defined for the purposes of this study, the disturbed area comprises the mining-impacted area from the Level 1 adit to the southern edge of the former tailings basin as shown on Figure 4-1. The available land area is about 114,000 square feet or 2.6 acres. The majority of the treatment area is limited to the disturbed area; however, all remedial alternatives include the construction of an aeration channel outside of the disturbed area. The existing road may need to be realigned so that the process units would fit within the disturbed area at Level 1.

The potentially available land area includes USFS property as shown on Figure 4-1. In order to avoid potential land ownership issues with the USFS, one alternative was designed without the use of USFS property. The remaining alternatives would require construction on USFS land.

Design Basis Flow Rates
Based on the limited adit flow data collected by EPA, the base flow rate appears to be less than 20 gpm. The adit discharges at this base flow rate from late summer until late spring when snowmelt begins. Flow during the spring is known to be higher, but has not yet been measured accurately. Three design basis flow rates were selected as follows.

- Low Flow (20 gpm) – A low flow alternative capable of treating the Level 1 adit base flow discharge was developed.
- High Flow (160 gpm or 125 gpm) – A high flow alternative was developed using the maximum available land area. The four stage

system with a mixing basin could treat 160 gpm and the three stage system using the same land area could treat 125 gpm.

- Medium Flow (50 gpm) – After selection of a low and high flow rate, a medium flow alternative was developed with a design flow rate of 50 gpm.

Design Basis Chemistry

Level 1 adit water quality data collected during pilot scale BCR operation (2007 to present) were compiled in order to determine the design basis chemistry. The maximum metal concentrations and minimum pH measured in the Level 1 adit discharge, provided in Table 4-1, were used for the design basis. For parameters that have relatively consistent concentrations (i.e., copper, manganese, zinc) the average values are similar to the design values. The average and design values for pH, aluminum, iron, and lead are substantially different. Note that the design basis chemistry is based on total concentrations whereas the water quality standards are mostly dissolved concentrations.

TABLE 4-1
Alternative 3 – Design Basis Chemistry (Total Metals Concentrations)

Parameter	Design Value	Average Value
pH, standard units	3.3	6.1
Aluminum (µg/L)	11,200	230
Cadmium (µg/L)	170	130
Copper (µg/L)	1,100	260
Iron (µg/L)	21,200	5,600
Lead (µg/L)	5,800	1,540
Manganese (µg/L)	12,700	11,000
Zinc (µg/L)	30,900	26,500

Gravity Flow

Based on site topography and lack of electricity, all of the PTS alternatives would function via gravity flow. The adit discharge would be controlled with a bulkhead, a flow diversion structure, or a combination of both.

Winter Operation

The PTS alternatives are all designed to function in the harsh site climate which is characterized by long cold winters and short summers. The most reliable access from December to May is by snowmobile or on skis via the Elk Creek Trail which is prone to avalanches. Based on the site climate and difficult access, the PTS alternatives were designed based on the assumption that they would function unattended for approximately six to eight months per year.

4.3.2.2 Unit Processes and Engineering Controls

A brief description of each of the unit processes is presented in the following sections. The sequence of the unit processes would be as follows: settling basin, biochemical reactor, mixing basin, aerobic wetland, and aeration channel. In

order to minimize the system footprint, all of the unit processes, including the settling basin, would be constructed in vertical-sidewall concrete basins. Adit discharge would flow into the settling basin, which would be located near the adit portal. The flow rate into the basin would be controlled with an adit bulkhead or a flow diversion structure or a combination of both. Engineering controls such as signs or fencing would be used to limit interactions between the public and the PTS.

Settling Basin

The settling basin would receive adit discharge and remove suspended solids including suspended metals such as iron hydroxide and grit via settling. The primary purpose of the settling basin is to prevent solids from fouling the BCRs.

A settling basin is included in all five PTS alternatives. For each alternative, the settling basin was designed based on a 24-hour detention time, an assumed sludge accumulation rate, and a sludge removal interval of 5 years. Total suspended solids (TSS) concentrations of the adit discharge upon which to estimate a solids accumulation rate in the settling basin were not available. For the purposes of this evaluation, the solids accumulation rate is assumed to be the same as the mixing basin accumulation rate. The settling basin would be designed to function in winter months when the surface is frozen and covered in snow. Water would exit the settling basin through a submerged intake below the ice. The settling basin would contain an emergency spillway that drains back to Elk Creek.

Biochemical Reactor (BCR)

The BCR would remove cadmium, copper, lead, and zinc from the water via biological reduction of sulfate to sulfide and subsequent precipitation of metal sulfides; alkalinity increase due to dissolution of limestone contained within the substrate and reduction of sulfate; precipitation of metal hydroxides; and sorption of trace metals (e.g., cadmium, copper, lead, zinc) to metal hydroxides and the organic media. The sulfide generated by the BCR treatment process would be partially consumed by metal sulfide precipitation, partially released as gaseous hydrogen sulfide, and partially released from the BCR cell as aqueous sulfide.

The BCR would receive water from the settling basin. The pilot BCR contained limestone-buffered media consisting of wood chips, hay, limestone, and cow manure. Based on the results of the pilot testing, a similar reactor media is recommended for the full-scale design. The BCR design criteria includes a volumetric molar metals loading rate (i.e., moles of metals per cubic meter per day received from the settling basin) and a maximum acidity loading rate of 35 grams per square meter of BCR surface area per day (Rose 2004).

The sulfide generated by the BCR treatment process would be partially consumed by metal sulfide precipitation, partially released as gaseous hydrogen sulfide, and partially released from the BCR cell as aqueous sulfide. The aqueous sulfide could be treated in a mixing basin as described below.

BCR effluent contains residual nutrients such as BOD, ammonia, and phosphorus, and *E. coli* bacteria. These parameters can be polished in subsequent unit processes. In general, the concentrations of these parameters are highest during the first year of operation as readily degradable organic matter is

flushed from the BCR cell. During treatability testing, the BOD concentration decreased from 314 mg/L during startup to an average value of 65 mg/L after one year of operation (six sampling events during the summer of 2008). *E. coli* concentrations decreased from $1.2x10^7$ counts (most probable number) per 100 mL during startup to less than the detection limit after one year of operation (Golder 2009a). Effluent ammonia concentrations averaged 5.1 mg/L as nitrogen in the six sampling events conducted in the summer of 2008.

All five PTS alternatives include two BCR cells in parallel to allow for operational flexibility. The BCRs would be designed as vertical flow reactors with water entering above the media, flowing down through the media, and exiting via perforated pipes in a gravel drainage layer. A flow splitter would be used to distribute flow evenly between the parallel BCR cells. The BCR cell would have a concrete floor and concrete sidewalls approximately 5 feet to 6 feet in height. The BCR cells would be insulated with a wood chip fill layer and a geomembrane cover similar to the pilot system. The cover would be equipped with 2" Schedule 40 PVC vent pipes. Coupled with typical surface water controls such as diversion ditches, the system would prevent surface water from entering the BCR. Similar to the pilot system where the wood chip cover prevents or minimizes compaction of the BCR media, the cover would be designed to withstand the potential snow loads at the site. The BCR effluent would discharge to a mixing basin (Alternatives 3A, 3B, 3C, 3E) or an aeration channel (Alternative 3D).

Mixing Basin

The mixing basin would combine water from the BCR and the settling basin to enhance co-treatment of the two streams of water. The mixing of organic-laden water such as BCR effluent with the untreated adit discharge would remove metals from the adit discharge via metal sulfide precipitation and sorption to organic matter and would dilute residual nutrients, destroy pathogens such as *E. coli*, and remove sulfides with acidity in the BCR effluent (see Section 3.4.2).

Based on the results of a bench-scale mixing study, a mixing ratio of one and a half parts BCR effluent to one part MIW (1.5 BCR:1 MIW) was selected (Golder 2009b). At this mixing ratio, the mixing basin would remove more than 98% of the cadmium, copper, lead, and zinc from the adit discharge while significantly reducing sulfide and residual nutrients from the BCR effluent stream. A mixing basin was included in four of the five PTS alternatives (Alternatives 3A, 3B, 3C, and 3E). The mixing basin discharges to the aerobic wetlands (if present) or aeration channel. The mixing basin design was based on a 24-hour detention time, an assumed sludge accumulation rate of 0.5 mL of sludge per liter of water treated, and a sludge removal interval of 5 years.

Aerobic Wetland

The aerobic wetland consisting of three aerobic wetland cells would receive water from the mixing basin and provide treatment of the residual nutrients and bacteria (EPA 2000a). Aerobic wetlands, also known as surface-flow wetlands, typically contain planted areas and open water zones. Typical wetlands are constructed as series of terraced cells with intermediate spill points. The wetland design criteria include an influent BOD concentration of 100 mg/L, a target effluent BOD concentration of 12 mg/L, and a minimum water temperature of 1º Celsius.

An aerobic wetland was included in only one PTS alternative (Alternative 3A); the other alternatives lack sufficient space. Given the high elevation and the short growing season at the site, the wetland cells would take multiple years to establish mature vegetation. The wetland effluent would discharge to the aeration channel

Aeration channel

An aeration channel would receive water from the mixing basin or aerobic wetlands and provide additional polishing of residual nutrients prior to discharge to Elk Creek. Physical aeration and an increase in dissolved oxygen would occur in the channel due to the relatively steep gradient. Aeration channel design criteria for residual nutrients, TSS, or bacterial removal are not well established. The design length of the aeration channels for each PTS alternative was dictated by the distance between the PTS and Elk Creek. Based on the short residence time, the channels are expected to provide a limited degree of polishing treatment. If polishing of residual nutrients is not a priority, the aeration channel could be eliminated from the alternative and the PTS effluent could be discharged directly to Elk Creek. In that case, Elk Creek downstream of the treatment system could be considered to function as the aeration channel, reducing the area impacted by treatment; however, Elk Creek would contain excess nutrients and bacteria and limited dissolved oxygen immediately downstream of the PTS discharge location.

All five PTS alternatives include an aeration channel. The aeration channel would have a one-foot wide bottom width, 3:1 sideslopes, and a total depth of one foot. The channel would be lined with a geomembrane liner and backfilled with riprap. As shown on Figures 4-3, 4-5, 4-6, 4-8, and 4-9, the channel would be constructed along the old mine access (a.k.a. Elk Creek Trail) to minimize construction impacts to the forest. The aeration channel would receive water effluent from the treatment system only, which is not expected to contain elevated concentrations of suspended solids. Channel design will prevent storm water runoff from entering the channel and depositing sediment. Sedimentation of the aeration channel is not expected to be an O&M issue.

Engineering Controls

The site is frequented by recreationalists year-round due to the Elk Creek Trail, a popular hiking and motor-biking trail, which leads from Kebler Pass Road near the town of Crested Butte to the site. Engineering controls would include limiting site access with fencing and signage to protect the PTS and prevent vandalism during summer months. These controls would be buried in snow in winter months and rendered ineffective. Winter-time controls would include signage to limit snowmobile traffic in the treatment system area.

4.3.2.3 PTS Alternatives

Five potential systems were evaluated:

Alternative 3A	20 gpm five-stage PTS
Alternative 3B	50 gpm four-stage PTS
Alternative 3C	160 gpm four-stage PTS
Alternative 3D	125 gpm three-stage PTS
Alternative 3E	20 gpm four-stage PTS on non-USFS Land

The five alternatives include variations in design flow rate and unit operations as described below. Sizing of the unit processes for each of the alternatives is provided in Table 4-2. Design calculations are provided in Appendix B.

Alternative 3A: 20 gpm Five-Stage Passive Treatment System
Alternative 3A includes five unit processes: a settling basin, BCRs, a mixing basin, an aerobic wetland, and an aeration channel. The design flow rate is 20 gpm which is assumed to be sufficient to treat the base flow condition from the Level 1 adit. The general process flow for Alternative 3A is shown on Figure 4-2. Metal removal would likely occur in the settling basins, BCRs, mixing basin, and the aeration channel. The bulk of the metal removal would occur in the BCRs and the mixing basin. The mixing basin would receive 12 gpm of BCR effluent and 8 gpm of MIW. The mixing basin effluent would flow into a series of aerobic wetlands which would treat the residual nutrients and *E. coli*. generated by the BCR treatment process. The final treatment stage, the aeration channel, would receive water from the mixing basin and provide additional treatment of residual nutrients prior to discharging to Elk Creek. The Alternative 3A design and layout is provided on Figure 4-3. The figure shows a proposed access road realignment location as an indication that the road must be realigned. The actual road location would be determined after consultation with property owners and managers and based on site conditions such as the desired road grade, topography, and potential impacts to ecological habitat.

Alternative 3B: 50 gpm Four-Stage Passive Treatment System
The Alternative 3B treatment system consists of four treatment processes: settling basin, BCRs, mixing basin, and aeration channel. The Alternative 3B design flow rate is 50 gpm and was selected as an intermediate flow rate between Alternative 3A (20 gpm) and Alternative 3C (160 gpm). The general process flow for Alternative 3B, provided in Figure 4-4, differs from Alternative 3A in that it does not include an aerobic wetland. In general, the unit processes for Alternative 3B are larger than those for Alternative 3A due to the higher design flow rate. The Alternative 3B mixing basin ratio would be 1.5BCR:1MIW; the basin would receive 30 gpm of BCR effluent and 20 gpm of MIW. The Alternative 3B design and layout is provided on Figure 4-5. The figure shows a proposed access road realignment location as an indication that the road must be realigned. The actual road location would be determined after consultation with property owners and managers and based on site conditions such as the desired road grade, topography, and potential impacts to ecological habitat.

Alternative 3C: 160 gpm Four-Stage Passive Treatment System
Similar to Alternative 3B, Alternative 3C includes four stages of treatment: settling basin, BCRs, mixing basin, and aeration channel (Figure 4-4). The

design flow rate of 160 gpm is the maximum flow that can be treated in the land area available at the Site. The Alternative 3C mixing basin ratio would be 1.5BCR:1MIW; the basin would receive 96 gpm of BCR effluent and 64 gpm of MIW. The Alternative 3C sizing and layout is provided on Figure 4-6. The figure shows a proposed access road realignment location as an indication that the road must be realigned. The actual road location would be determined after consultation with property owners and managers and based on site conditions such as the desired road grade, topography, and potential impacts to ecological habitat.

Alternative 3D: 125 gpm Three-Stage Passive Treatment System

Alternative 3D is a three-stage PTS which includes a settling basin, BCRs, and an aeration channel and is the only alternative that does not include a mixing basin (Figure 4-7). A mixing basin was excluded in order to have an alternative that is expected to produce an effluent with the lowest effluent contaminant of concern (COC) concentrations of all the alternatives. The unit process dimensions for Alternative 3D are similar to those for Alternative 3. However, the Alternative 3D dimensions are slightly larger than those for Alternative 3B because this alternative makes use of all the land area available with three unit processes rather than the four processes included under Alternative 3. The treatment flow rate for this alternative is 125 gpm. The disadvantage of eliminating the mixing basin is a lower treatment flow rate than Alternative 3D and potentially higher effluent concentrations of residual nutrients and *E. coli.* The Alternative 3D layout and sizing is provided on Figure 4-8. The figure shows a proposed access road realignment location as an indication that the road must be realigned. The actual road location would be determined after consultation with property owners and managers and based on site conditions such as the desired road grade, topography, and potential impacts to ecological habitat.

Alternative 3E: 20 gpm Four-Stage Passive Treatment System on non-USFS Land

Alternative 3E is a four-stage PTS which includes a settling basin, BCRs, a mixing basin, and an aeration channel and is the only alternative that does not require construction on USFS property. The Alternative 3E design flow rate is 20 gpm. The process flow diagram for this alternative is provided in Figure 4-4. Alternative 3E has the same flow rate and unit process dimensions as Alternative 3A for the settling basin, BCRs, and mixing pond. However, in order to minimize the footprint and thereby avoid construction on USFS, Alternative 3E does not include an aerobic wetland. Without an aerobic wetland, the Alternative 3E effluent would contain higher concentrations of residual nutrients than Alternative 3A. The advantage of Alternative 3E is a smaller footprint that excludes USFS property and a lower capital cost. The Alternative 3E layout and sizing is provided on Figure 4-9. The figure shows a proposed access road realignment location as an indication that the road must be realigned. The actual road location would be determined after consultation with property owners and managers and based on site conditions such as the desired road grade, topography, and potential impacts to ecological habitat.

TABLE 4-2
Alternative 3 Process Sizing

Alternative	Settling Pond Area (ft^2)	BCR Area (ft^2)	Mixing Basin Area (ft^2)	Aeration Channel Length (ft^2)	Wetland Area (ft^2)
Alternative 3A (20 gpm)	1,900	5,000	2,000	1,060	26,650
Alternative 3B (50 gpm)	4,100	12,000	4,200	1,400	NA
Alternative 3C (160 gpm)	11,450	38,000	12,000	1,070	NA
Alternative 3D (125 gpm)	9,400	50,000	NA	1,060	NA
Alternative 3E (20 gpm)	1,940	5,000	2,000	1,050	NA

4.3.2.4 Operation and Maintenance (O&M)

Annual O&M would consist of verifying proper flow rates, pipe inspections and cleaning, sampling, and reporting. The BCR media would need to be replaced every 10 to 20 years. Every five years, solids/sludge removal from the settling basin would be required.

BCR Media Replacement

The longevity of BCR media can be estimated based on limestone and carbon longevity. Theoretical limestone and carbon longevity estimates for the pilot system are 6 and 21 years, respectively (Golder 2009a). In order to increase the longevity, the full-scale bioreactor media should contain a higher proportion of limestone than the pilot system. Longevity estimates for other BCR systems are typically between 10 and 20 years (Gusek and Schuek 2004). At the end of its lifespan, the media would likely consist of non-degradable organic matter (i.e., lignin), metal sulfides, and residual limestone. Media disposal options include disposal in an on-site repository, disposal in an off-site landfill, or drying and burning of media on site for volume reduction and subsequent disposal in a repository or landfill. Spent BCR media is different from typical metal hydroxide water treatment sludge which requires mechanical dewatering with filter presses. In a BCR, metal sulfides accumulate within the organic media during treatment of mine waters and are removed along with media during replacement events. During a media replacement event, the BCR would be drained prior to excavation and disposal. BCR media has been to shown to drain readily in place without any specific dewatering processes. The pilot BCR at the Golinsky site drained in about 20 hours (Golder 2007). The drainage rate is a function of permeability, field capacity, and residual moisture content, factors that are not very sensitive to changes in temperature. Substrate age may also affect the drainage rate, as degradation of substrate with time may lead to a higher degree of fine particles which will drain more slowly. Regardless, the substrate drainage rate at the Standard mine is expected to be similar to the Golinsky site pilot BCR and the total drain time is expected to be from several days to one week assuming similar substrate composition and ages. Water

drained from the BCR would be recycled for treatment by the other BCR(s) on site. It is anticipated that draining of the BCR and allowing the BCR media to dewater within the BCR cell itself will be sufficient to adequately prepare the BCR media for either on-site or off-site disposal. However, future pilot testing of dewatering and disposal options at the Standard Mine site will be conducted if necessary to finalize a site-specific media disposal strategy. The media replacement would likely occur over two construction seasons to allow continual treatment in one BCR cell while the other is being refurbished. The cost estimates for replacing the BCR media include the costs for construction over a two year period and the associated mobilization charges, but for clarity and simplicity the costs are totaled and shown in one year (Appendix A).

The spent media would be tested to determine if it is a characteristic hazardous waste. In general, BCRs throughout the industry have not been in operation long enough to determine characteristics of spent media. If testing reveals that the media or media ash is hazardous, the media would be fixed (e.g., with cement and/or crushed limestone or fly ash) in order to render it non-hazardous. Fixation of sludge is a common process in industrial wastewater treatment plants. Because the lifespan of the media is expected to be greater than 10 years, acceptable fixation methods and disposal options would be evaluated during the initial media replacement event.

Cost estimates for Alternative 3 considered off-site disposal of spent BCR media for the reasons discussed below, though on-site disposal is not precluded. Design and construction of the existing site repository was a significant effort due to lack of available space on site, multiple stakeholder input, and site construction challenges. The existing repository is closed and it would be expensive to periodically re-open the repository, distribute materials such that site drainage is maintained, and re-cover the affected area. On the other hand, fuel costs could increase significantly in the future which could make on-site disposal cost effective. Also, on-site disposal is consistent with EPA “green” initiatives to reduce greenhouse gas emissions and manages the spent media at the site where it was generated rather than consuming local landfill space. The feasibility and cost of on-site disposal is highly dependent on the size of the BCR. If burning of the spent media is allowed prior to placement in a repository, that will reduce the volume of spent media, but the remaining ash will still contain metals with the same concern for release. At two other pilot sites, the ash was mixed with Portland cement to form a concrete-like waste in preparation for disposal (Knight Piesold 2001). Pending detailed design analysis of on-site versus off-site disposal, the PTS alternatives presented herein assumed off-site disposal of the spent BCR media as a dependable and proven management approach.

The replacement of media would consist of mixing fresh media off-site. Trucks would haul fresh media to the site and return with spent media rather than deadhead empty. If the media is hazardous, an off-site staging area would be used to fix the spent media.

Solids/Sludge Removal

PTSs generate low quantities of sludge compared to active lime treatment systems due to the formation of compact metal sulfide sludge rather than the more voluminous metal hydroxide sludge. The settling basin and BCRs would accumulate solids or sludge as described below.

- Settling Basin Solids - Solids are expected to accumulate in the settling basin and would need to be removed about every five years. Solids removal from the settling basin would be accomplished with a vacuum truck or skid-steer loader. Solids could be dewatered on site using dewatering containers such as the Geotube™. The solids are assumed to accumulate at a rate of 0.5 mL per liter of treated water (mL/L of treated water) and the basin contains sufficient storage for 5 years of sludge accumulation. The solids would be tested to determine if they are a characteristic hazardous waste. Based on qualitative observations during treatability testing and adit water quality data, the accumulated solids are expected to be comprised of iron hydroxides and sediment and therefore non-hazardous. If the solids are hazardous, an off-site staging area would be used to fix the spent media.
- BCR Media - Disposal considerations for the BCR media are discussed in the previous section.
- Mixing Basin Sludge - Sludge removal from the mixing basin would be required. Based on the results of the mixing study (Golder 2009b), the sludge generation rate in the mixing basin is expected to be about 0.5 mL/L of treated water. The mixing basin design includes 78 yd^3 of sludge storage volume which is the equivalent of about five years of sludge storage. The sludge would likely be comprised of organic matter and metal sulfides. The hazardous characteristics of the mixing basin sludge are unknown; pilot testing of the mixing process is recommended to allow further characterization. Sludge removal would be accomplished with a vacuum truck or skid-steer loader.

Long-Term Monitoring

Long-term monitoring would be required to verify compliance with site discharge requirements. Over the course of the first year, monthly monitoring would be recommended to verify proper startup and operation. After the first year, the monitoring frequency would be reduced to bi-monthly (i.e., every other month). A sampling and analysis program would be necessary for all of alternatives that include a PTS and would likely include the following influent and effluent parameters: cadmium, copper, iron, lead, manganese, zinc, BOD, total dissolved solids (TDS), TSS, nitrate, ammonia, and total phosphorus. In addition, influent and effluent flow rate, pH, temperature, specific conductance, dissolved oxygen (DO), and oxidation-reduction potential would be measured in the field. Sampling during winter and spring months is difficult given the heavy snowfall and lack of road access to the site. During treatability testing, site access during winter and spring was achieved with a snowmobile or on skis. This is not anticipated to be continued during full-scale operation. An automated monitoring system, including influent and effluent Teledyne ISCO™ autosamplers and flumes, may be used to allow year-round monitoring. Sample collection and download of flow data would be conducted in June or July when the site becomes accessible.

4.4 ALTERNATIVE 4 – TREATMENT AT MT. EMMONS PROJECT WATER TREATMENT PLANT

Alternative 4 involves collecting water at a flow retention barrier placed in the Level 1 adit and piping the water to the Mt. Emmons Project WTP for treatment. It is unknown if the Mt.

Emmons Project WTP is able to process the additional flow or if the owners of the WTP are willing to cooperate with this project. Development of this alternative assumes these are feasible.

4.4.1 Rationale for Inclusion of Alternative 4

Currently the Mt. Emmons Project, formerly known as Lucky Jack Mine and Keystone Mine, operates a WTP located near their reclaimed tailing ponds. It has been proposed that drainage from Standard Mine may be treated at the Mt. Emmons Project WTP. Conveying Level 1 discharge to the Mt. Emmons Project WTP would have a positive impact on the watershed by reducing the volume of contaminated water flowing into Elk Creek. This alternative combines the technologies of diversion and collection along with the respective process options of piping and ponding.

4.4.2 Alternative 4 Description

The major components of Alternative 4 include the following.

- Road improvements
- Portal and adit rehabilitation
- Collect Level 1 mine discharge at a flow retention barrier
- Place a pipeline from Level 1 to the WTP
- Install a discharge tank near the WTP

The components are described below. Details of Alternative 4 are illustrated on Figures 4-10 and 4-11.

Road Improvement
The USFS Forest Development Road (FDR)-732 is used to access the Standard Mine. Because the road is not regularly maintained, improvements may be required to facilitate construction activities. A grader, front-end loader, and bull dozer would be mobilized to improve road conditions along with clearing and constructing ditches, where necessary, along approximately 5 miles of FDR-732. Road improvements were estimated to require about 10 working days.

Portal and Adit Rehabilitation
The portal and adit would be rehabilitated up to, and just beyond, the flow retention barrier location, approximately 20 feet in from the portal. Existing collars and timbers that comprise the back and ribs of the adit would be removed and replaced with steel sets and/or timbers where needed to provide a safe environment for construction of the flow retention barrier. The adit floor would be cleared of mine debris and any observable contaminating material that is easily removed. A gate closure, including concrete masonry unit (CMU) support on the ribs and a large diameter corrugated metal pipe (CMP) with steel sets along the back, would be installed at the portal to provide controlled access into to the workings, as shown on Figure 4-11. The area around the flow retention barrier location would be cleared of any debris and scaled of any loose rocks in the ribs, back, and floor in preparation for construction.

Collection Pond at Level 1
A flow retention barrier would be placed in Level 1 to facilitate capture of water into a pipe and conveyance of the contaminated water to the WTP. The barrier would be constructed with CMUs approximately 20 feet into the adit from the portal. The CMUs would be cemented together to form an impermeable barrier. It would span the width of

the adit, have a thickness of approximately 2 feet, and a height of roughly 3 feet. The barrier would be secured to the adit ribs and floor with reinforcing dowels spaced approximately every 2 feet.

Pipeline Placement

A capture pipe would be installed through the barrier approximately 1-foot above the adit floor, as shown in Figure 4-10. The pipe would have a control valve installed on the down gradient side of the barrier for flow regulation. Mine discharge would be piped out of the tunnel and along the access road FDR-732 to the Mt. Emmons Project WTP, which is about 5 miles to the east-southeast with an approximate 1,600-foot elevation change, as illustrated on Figure 4-10. The pipe system would consist of a HDPE pipe with cleanout access located approximately every 200 feet along the pipe alignment. The pipeline would be designed to maintain a negative grade and to withstand the pressure head exhibited by the 1,600 feet of elevation difference. Earthen berms would be placed on the pipeline approximately every 200 feet and where needed to assist with securing the pipe and to limit pipe movement.

Discharge Tank

Water from the pipeline would be temporarily stored in a discharge tank near the Mt. Emmons Project WTP. Approximately 240,000 gallons of storage would be required to store 40 hours of flow from Standard Mine at a flow rate of approximately 100 gpm, assuming high flow conditions. The discharge tank would be constructed approximately 500 feet from the WTP. Additional piping and control valves would be installed from the tank to the WTP for gravity feeding of the effluent.

Maintenance

Maintenance would include system inspections and reviews, annual cleanout and maintenance of the pipeline, discharge tank, and flow retention barrier, valve and pipe replacement as needed, and road maintenance.

4.5 ALTERNATIVE 5 – BULKHEAD AT LEVEL 1

Alternative 5 focuses on controlling the flow of contaminated water out of the Level 1 adit by constructing a reinforced concrete bulkhead within the adit. The bulkhead would be used to retain contaminated water within the mine workings and/or to regulate the flow rate discharging from Level 1.

4.5.1 Rationale for Inclusion of Alternative 5

Bulkheads are a widely accepted method of sealing mine adits. Retaining and/or controlling the flow of Level 1 adit discharge with a bulkhead could reduce the amount of flow from Level 1, resulting in a positive impact on the water quality in Elk Creek and downstream waters. The bulkhead will likely result in water backing up within the mine workings, with the potential for water to fill the workings up to Level 2. USGS and DRMS studies have indicated contamination is most likely occurring as water flows from Level 3 through the workings towards Level 1 (USGS 2009; USGS 2010a; USGS 2010b; DRMS 2009). Storing water within the mine workings may result in the removal of oxygen from the system thereby decreasing oxidation of the sulfide mineralization. This could have a positive impact on the metal loading of the mine discharge by decreasing metal concentrations.

4.5.2 Alternative 5 Description

The bulkhead could be constructed either as an impermeable barrier or as a flow-through barrier. These options have been divided into Alternatives 5A and 5B, respectively. The major components listed below would be utilized for both Alternatives 5A and 5B.

- Road improvement.
- Removal of the blockage located approximately 80 feet from the Level 1 portal.
- Stabilization of the adit in the area surrounding the location where the blockage occurred to prevent additional cave in.
- Rehabilitation of the Level 1 portal and adit up to the bulkhead location.
- Preparation of the back, floor, and ribs of the adit at the bulkhead location to facilitate construction activities.
- Construction of the bulkhead including reinforcing dowels and grout curtain.

The following sections describe the system components. Details of Alternative 5 are illustrated on Figures 4-11 and 4-12.

Road Improvement

Forest Service road FDR-732 is used to access the Standard Mine. Because the road is not regularly maintained, improvements may be required to facilitate construction activities. A grader, front-end loader, and bull dozer would be mobilized to improve road conditions along with clearing and constructing ditches, where necessary, along approximately 5 miles of FDR-732. Road improvements were estimated to require about 10 working days.

Blockage Removal

The blockage located approximately 80 feet into Level 1 would be removed so that the bulkhead could be installed far enough into the adit to allow for sufficient ground cover and competent bedrock. First, exploratory holes would be drilled into Level 1 behind the blockage to determine the presence and extent of water behind the blockage. The holes would be drilled from the surface between Levels 1 and 2. If water buildup is identified, the water would be drained via submersible pumps. The drill holes would be grouted closed to reduce groundwater infiltration into the workings. The blockage would be removed using standard mining reclamation and construction techniques. It is likely that the collapsed zone of the adit would require reinforcement and stabilization to protect against instability in the area surrounding the blockage.

Portal and Adit Rehabilitation

The portal and adit would be rehabilitated up to, and just beyond, an appropriate location for the bulkhead. Existing collars and timbers that comprise the back, ribs, raises, and winzes of the adit would be removed and replaced with steel sets and/or timbers where needed to provide a safe environment for construction of the bulkhead. The adit floor would be cleared of mine debris and any observable contaminating material that is easily removed. A gate closure including CMU support on the ribs and a large diameter CMP with steel sets along the back would be installed at the portal to restrict access into to the workings, as shown on Figure 4-11. The area around the proposed bulkhead location would be cleared of debris and scaled of loose rocks in the ribs, back, and floor in preparation for bulkhead construction.

The reinforced concrete bulkhead must be constructed in relatively competent bedrock free of highly fractured and stressed zones. The bulkhead location would be selected

based on observations of the adit bedrock after the adit rehabilitation. If the location initially proposed for the bulkhead did not meet the requirements, additional rehabilitation would be performed until a suitable bulkhead location is identified.

Bulkhead Construction

Once the bulkhead location has been selected and prepared, drill holes would be advanced approximately one to two feet in depth for installation of anchoring dowels to support the bulkhead, as shown on Figure 4-12. The dowels would be grouted in place and later encapsulated in the bulkhead concrete. Formwork would be constructed for placement of reinforced concrete that would make up the bulkhead structure. The bulkhead would be constructed with a minimum thickness of five feet. A grout curtain would be constructed in the rock surrounding the bulkhead near the outward end of the bulkhead to stabilize the rock and to reduce seepage around the bulkhead (Figure 4-12).

Two chemical resistant HDPE pipes would be installed in the bulkhead. A main pipe would be fitted with a manually operated pinch valve and rubber sleeve and extend to the portal. The valve would be located within the Level 1 adit inside the portal gate to provide security and prevent freezing while still providing convenient access for controlled release of retained drainage. A secondary pipe would be used to clean out built up debris or sludge from the inward side of the bulkhead.

It is assumed that Level 1 and subsequent upper levels would provide sufficient capacity to store the mine discharge. No consideration was taken to account for the potential development of additional seepage pathways that may develop due to the increased head pressure within the mine workings.

Maintenance

Maintenance would include system inspections and reviews, pipe and valve maintenance and replacement as needed, road maintenance, and adit rehabilitation.

4.5.2.1 Alternative 5A Description – Impermeable Bulkhead

The bulkhead for Alternative 5A would be constructed as described above and used as an impermeable barrier. It would be designed to impede flow out of Level 1 thereby retaining mine discharge within the mine workings. The only flow allowed to pass the bulkhead would be emergency release through the main pipe in the bulkhead.

4.5.2.2 Alternative 5B Description – Flow-Through Bulkhead

The bulkhead for Alternative 5B would be constructed as described above and used as a flow-through barrier to regulate the Level 1 adit discharge. The main pipe would facilitate flow regulation, as described above. Discharge would be directed either to Elk Creek or to a treatment facility.

Development of this alternative assumed the mine discharge would be released to Elk Creek. If discharge requires treatment, this alternative would be implemented in conjunction with either Alternative 3 – Biochemical Reactor or Alternative 4 – Mt. Emmons Project Water Treatment Plant, should those alternatives require flow regulation.

4.6 ALTERNATIVE 6 – SURFACE WATER DIVERSION

Alternative 6 includes construction of surface water diversion berms to intercept and direct surface water away from the mine workings and the Standard Fault between Levels 1 and 5, as illustrated on Figure 4-13.

4.6.1 Rationale for Inclusion of Alternative 6

USGS and DRMS studies have indicated contamination occurs as water flows from Level 3 through the workings toward Level 1 (USGS 2009; USGS 2010a; USGS 2010b; DRMS 2009). Water may seep into these levels from along the Standard Fault and through groundwater infiltration into the workings. Intercepting and diverting surface water away from the vicinity of the Standard Mine may reduce the volume of water that makes its way into the workings. The positive impacts of this alternative include diversion of relatively clean water to Elk Creek and a reduction in the volume of water available for infiltration into the mine workings.

4.6.2 Alternative 6 Description

Diversion berms would be constructed on the eastern side of the Standard Fault to intercept and divert precipitation runoff away from the mine workings and direct it towards natural drainages that feed Elk Creek. A northern diversion berm would be constructed between Level 4 and Level 5 to direct surface water runoff from the head of the basin away from the mine workings and towards Elk Creek near Level 98. Discharge from the Level 5 adit would be diverted to the east and around the tailing pile located at the portal.

Diversion channels were not included for the western side of the Standard Fault because near surface flow along the western side of the Standard Fault and the eastern side of the Elk Fault appears to run parallel to the fault and toward Elk Creek rather than toward the mine workings (USGS 2010a). The Elk Fault was determined to act as a barrier to surface water flow west of the Elk Fault zone (USGS 2010a).

The major components of Alternative 6 include the following.

- Road improvements
- Excavate soil to expose bedrock along the alignment of each berm
- Install culverts or open water crossings such as rolling dips to maintain access roads
- Construct berms including placement and compaction of earthen material
- Place riprap material for berm and natural ground protection

The following sections describe each component. Details of this Alternative 6 are illustrated on Figure 4-13.

Road Improvement

Forest Service road FDR-732 is used to access the Standard Mine. Because the road is not regularly maintained, improvements may be required to facilitate construction activities. A grader, front-end loader, and bull dozer would be mobilized to improve road conditions along with clearing and constructing ditches, where necessary, along approximately 5 miles of FDR-732. Road improvements were estimated to require about 10 working days.

Berm Alignment Preparation

Bedrock is believed to be at or near ground surface in the upper Elk Basin (USGS 2010a). The soil along the alignment of each berm would be removed to the top of the bedrock and the soil could be used for berm construction, where suitable. The area surrounding the berm alignments would be cleared of vegetation and debris in preparation for placement of compacted embankment materials, culverts, and riprap.

Placement of Culverts or Alternative Road Crossings

Culverts would be installed under roads that intersect the diversion berms. A total of three culverts would be needed for the proposed berm alignments. The culverts would be sized to convey the runoff from a 25-year, 24-hour storm event and range from 36 to 48 inches in diameter. Locations and details of the culverts are provided on Figure 4-13. Open water crossings such as rolling dip structures could be used in the place of culverts.

Construction of Diversion Berms

Diversion berms would be constructed to intercept and convey runoff from a 100-year, 24-hour storm, which totals approximately 3.4 inches of rainfall. The berms would range in height from one to four feet deep and would consist of compacted earthen material with riprap erosion protection, as illustrated on Figure 4-13.

A trench key backfilled with relatively impermeable soil would be installed under the berm where necessary to reduce infiltration into the surrounding soils. The key would consist of a trench excavated into bedrock and backfilled with compacted earthen material. The diversion berm would then be constructed over the trench key. In areas where bedrock is not exposed, the overlying soils would be excavated so that the berm could be constructed on bedrock with an associated key.

Based on investigations conducted in 2006 for the Standard Mine waste repository, sufficient quantities of earthen material would be available near the site for berm construction.

Placement of Riprap

Surface water would be conveyed on the inboard side of the diversion berm, which would act as the diversion channel. Placement of riprap in the diversion channel would reduce the potential for erosion and headcutting of the bermed material and the velocity of surface water runoff conveyed. A typical section of the berm and diversion channel is provided on Figure 4-13. A range in riprap size of 10 to 36 inches was estimated to provide erosion resistance along the diversion channels based on a 25-year, 24-hour storm event. Maintenance of the diversion berm could be required after higher intensity storm events.

A source for riprap has been identified near the site, as estimated from the 2006 investigations conducted for the Standard Mine repository. This riprap ranges in size from 6 to 36 inches.

Maintenance

Maintenance would include system inspections, diversion channel and culvert cleanout and repair, and diversion channel and culvert replacement as needed.

4.7 ALTERNATIVE 7 – FLOWABLE FILL AND FOAM IN LEVEL 3

Alternative 7 includes placement of low-permeability fill on the floor of the Level 3 adit to impede downward flow into lower levels of the mine workings. Water from the adit would flow out of the Level 3 portal and be directed to either Elk Creek or a treatment facility (i.e., a passive water treatment system or the Mt. Emmons Project WTP), depending on the quality of water collected. Development of this alternative assumes that the Level 3 discharge would be conveyed to an elevation below Level 1 and discharged into Elk Creek. The conceptual design for conveying the water to Level 1 where it would be treated using Alternative 3 or 4 would be similar to that presented here, allowing for easy modifications if a treatment system is necessary at a later time as part of a phased approach to remediating the site.

4.7.1 Rationale for Inclusion of Alternative 7

USGS and DRMS studies have indicated that contamination occurs as water flows from Level 3 through the workings toward Level 1 (USGS 2009; USGS 2010a; USGS 2010b; DRMS 2009). Intercepting water within Level 3 may reduce the volume of water that flows through the workings and becomes contaminated, thus reducing the flow of contaminated water out of the Level 1 portal and the metal concentrations in the discharge. This would have a positive impact on downstream water quality by reducing the metals load added to Elk Creek.

4.7.2 Alternative 7 Description

Raises and winzes would be sealed to impede downward migration of water and to facilitate fill placement. Pressure grouting and/or shotcrete would be used to supplement the flowable fill in areas of higher conductance (i.e., highly fracture zones, soil-like zones).

Flowable fill would be placed on the entire floor of Level 3. The fill would be placed in two phases. The first phase would be placed to create a base for the second and main phase of fill placement. The second phase would be placed over the first phase and contoured to promote positive drainage out of the adit.

The drainage that would be produced from Level 3 may require treatment. Monitoring of the drainage would be performed to evaluate if treatment is required.

The major components of Alternative 7 include the following.

- Road improvements
- Rehabilitate the Level 3 portal and adit to facilitate construction activities.
- Remove debris in the adit, including timbers, pipe, mining waste, and rock piles
- Clean the adit floor
- Install ventilation and communication systems
- Re-collar the raises
- Construct polyurethane foam bulkheads in three raises
- Pressure grout and/or shotcrete potential zones along the fault or in fractured rock on the adit floor
- Place flowable fill on the floor of Level 3
- Channelize Level 3 drainage to Level 1

The following sections describe each of these components. Details of Alternative 7 are illustrated on Figures 4-14 and 4-15.

Road Improvement

Forest Service road FDR-732 is used to access the Standard Mine. Because the road is not regularly maintained, improvements may be required to facilitate construction activities. A grader, front-end loader, and bull dozer would be mobilized to improve road conditions along with clearing and constructing ditches, where necessary, along approximately 5 miles of FDR-732. Road improvements were estimated to require about 10 working days.

Portal and Adit Rehabilitation

The portal at Level 3 would require rehabilitation to provide a safe working environment and access into the adit. An area around the portal would be excavated to facilitate construction of a new gate closure as detailed on Figure 4-11. The ribs and back of the portal would be reinforced with CMUs and a large diameter CMP with associated steel sets, respectively. The adit floor would be cleared of debris, including timbers, rails, pipes, mining waste, and rock piles. Rock bolts and shotcrete would be installed in the ribs and back of the adit for stabilization where necessary. Ventilation control and communication systems would be established from the portal to the rear raise, approximately 610 feet into the adit. Existing collars and timbers around the heads of raises on the floor of Level 3 would be removed and replaced.

Raise and Shaft Closure

Level 3 has three raises (forward, center, and rear) that daylight on the floor and connect Level 3 to Level 2. The foot of a shaft is also located near the center raise, which daylights at the ground surface and is referred to as Level 4. The raises that connect Level 3 to Level 2 are located 142, 360, and 610 feet from the Level 3 portal, respectively. The shaft that connects Level 3 to Level 4 (i.e., the ground surface) is located approximately 338 feet from the Level 3 portal. Adjacent to the center raise is a stope-like feature extending upward from Level 2. A crown pillar of approximately 6 to 20 feet exists between Levels 2 and 3 at this location.

Prior to construction of the polyurethane foam plug, drainage within the adit would be diverted from the raise opening or temporarily dammed to prevent seepage into the raise during construction of the plug. Loose material would be removed from within the polyurethane plug footprint. Polyurethane foam would be used to seal the raises, as illustrated on Figure 4-15. The polyurethane foam plugs would have a minimum thickness of 20 feet for the forward and center raises and 10 feet for the rear raise. Each raise would be filled to within 6 to 12 inches of the adit floor to accommodate shotcrete and/or flowable fill placement over the plug.

The shaft located about 142 feet from the Level 3 portal is currently collapsed at the surface (Level 4). The depression at the surface would be excavated to approximately five feet in depth. Polyurethane foam would then be placed in the excavation to provide a relatively impermeable surface seal and reduce seepage into Level 3. The polyurethane foam plug would be covered with the excavated soils to reduce vandalism and degradation from exposure to ultraviolet light.

Shotcrete Placement

Portions of the Level 3 floor and lower sidewalls exhibiting high conductance or seepage into the lower levels would be covered with shotcrete. These may be areas along the

fault or fractured zones where seepage to lower levels is likely to occur. Shotcrete would also be used to cover the polyurethane foam shaft plugs. Additives, such as reinforcing fibers and accelerators, would provide additional strength and to quicken the shotcrete cure time. The shotcrete would be smoothed and sloped towards the Level 3 portal for drainage.

Pressure grouting, wherein grout would be injected under pressure into cracks, could be used to seal zones where water could seep into lower levels.

Flowable Fill Installation

Flowable fill placed along the Level 3 floor would collect and channel groundwater toward the portal, as illustrated on Figure 4-15. The flowable fill would act as a relatively impermeable barrier to reduce the flow of water into lower levels of the mine. The drift would be cleared of debris, lumber, rail, pipe, miscellaneous construction materials, accumulated soil and rock, and ponded water to facilitate flowable fill placement.

The floor would be divided into 50-foot long segments perpendicular to the drift to assist with staging the fill material. The floor of Level 3 is likely uneven, so the flowable fill would be placed in two phases. Irregularities in the floor would be covered first using as little flowable fill as possible to create a base for the second phase of flowable fill placement. Once a relatively level base has been established, a coarse survey would be performed to determine high points, low points, and the general slope of the filled floor. The second phase of flowable fill would be placed on top of first phase in each 50-foot segment to a level that promotes positive drainage to the Level 3 portal. Additives, such as larger size aggregates or accelerators, would be added to the second phase flowable fill mix to create an early setup. The top surface would be floated to form a reverse crown.

Level 3 Discharge Channelization

Drainage from Level 3 would be conveyed via a lined open channel to Elk Creek below Level 1. The water quality of the drainage from Level 3 is unknown and would require monitoring to determine if treatment is necessary. Treatment has not been included as part of this alternative.

Maintenance

Maintenance would include system monitoring and reviews, shotcrete re-application, replacement of flowable fill in disturbed areas, channel cleanout, road maintenance, and adit rehabilitation.

4.8 ALTERNATIVE 8 – HORIZONTAL DRAINS IN LEVEL 3

Alternative 8 involves installing a series of horizontal drains within Level 3 at an angle of 5 to 10 degrees above horizontal, as shown on Figure 4-16. The drains would dewater the surrounding bedrock to reduce the amount of groundwater infiltration into the lower mine workings. The water quality of groundwater collected from the horizontal wells would be monitored to determine if treatment is required.

4.8.1 Rationale for Inclusion of Alternative 8

USGS and DRMS studies have indicated contamination occurs as water flows from Level 3 through the workings toward Level 1 (USGS 2009; USGS 2010a; USGS 2010b; DRMS 2009). Intercepting seepage at Level 3 may reduce flow into Level 1 and the discharge

observed at the Level 1 portal. This would have a positive impact on water quality in the basin by reducing the volume of contaminated flow into Elk Creek and downstream waters.

4.8.2 Alternative 8 Description

The major components of Alternative 8 include the following.

- Road improvements
- Rehabilitate the Level 3 portal and adit to facilitate construction activities
- Install ventilation and communication systems
- Re-collar the raises
- Drill horizontal drains within Level 3
- Install casing and piping systems to remove water collected by the horizontal drains from Level 3
- Channelize Level 3 drainage to Level 1

The following sections describe each of these components. Details of this alternative are illustrated on Figure 4-16.

Road Improvement
Forest Service road FDR-732 is used to access the Standard Mine. Because the road is not regularly maintained, improvements may be required to facilitate construction activities. A grader, front-end loader, and bull dozer would be mobilized to improve road conditions along with clearing and constructing ditches, where necessary, along approximately 5 miles of FDR-732. Road improvements were estimated to require about 10 working days.

Portal and Adit Rehabilitation
The portal at Level 3 would require rehabilitation to provide a safe working environment and access into the adit. An area around the portal would be excavated to facilitate construction of a new gate closure as detailed on Figure 4-11. The ribs and back of the portal would be reinforced with CMUs and a large diameter CMP with associated steel sets, respectively. The adit floor would be cleared of debris, including timbers, pipes, mining waste, and rock piles. Rock bolts and shotcrete would be installed in the ribs and back of the adit for stabilization where necessary. Ventilation control and communication systems would be established from the portal to the rear raise, approximately 610 feet into the adit. Existing collars and timbers around the heads of raises on the floor of Level 3 would be removed and replaced.

Horizontal Drain Installation
The horizontal drains would be installed in the ribs of the adit at 10-foot intervals and at target locations within fractured, altered, and mineralized zones. Approximately 100 drains would be installed, beginning at about 150 feet from the portal. Each drain would have an estimated total length of about 50 feet. A single drain would be installed on each rib at an angle of 5 to 10 degrees above horizontal. Conventional limited access drilling equipment would be used to install the drains.

A casing and piping system would be constructed at the collar of the drains to collect and discharge the groundwater collected from the drains. The collection system would segregate water emanating from the drains from other Level 3 waters. Segregating the

horizontal drain water would be a benefit if the quality of the other water discharging from Level 3 is poor and the water requires treatment.

Level 3 Discharge Channelization
Drainage collected within the piping system would be conveyed via a lined open channel from the Level 3 portal to Elk Creek at Level 1. The water quality of the collected drainage from the horizontal drains Level 3 is unknown and would require monitoring to determine if treatment is necessary. Treatment has not been included as part of this alternative.

Maintenance
Maintenance would include inspections and system reviews, pipeline cleanout and replacement as needed, valve maintenance and replacement as needed, channel cleanout and repair, adit rehabilitation, and road maintenance.

4.9 ALTERNATIVE 9 – SURFICIAL EXTRACTION WELLS

Alternative 9 entails installing groundwater wells that could be used to intercept and extract groundwater before it enters the mine workings. Water from the extraction wells would be collected and discharged into natural drainage channels downstream of Level 1.

4.9.1 Rationale for Inclusion of Alternative 9

Reducing the volume of water that enters the mine workings would result in a reduction of the discharge observed at the Level 1 portal. This would have a positive impact on water quality in the basin by reducing the volume of contaminated water that flows into Elk Creek and downstream waters.

4.9.2 Alternative 9 Description

Two scenarios were considered for surficial extraction wells, horizontal (Alternative 9A) and vertical (Alternative 9A) wells. Both alternatives are presented to allow comparison between horizontal and vertical wells and to provide the option of implementing either or both alternative.

4.9.2.1 Alternative 9A Description – Horizontal Extraction Wells

Alternative 9A consists of installing a series of horizontal wells from the ground surface in the vicinity of the underground mine workings as shown on Figure 4-17. Each horizontal well would drain via gravity to a piping collection and conveyance system. The major components of Alternative 9A include the following.

- Road improvements
- Site preparation including construction of access roads and drilling pads
- Install horizontal extraction wells
- Construct a piping system to convey water collected by the horizontal extraction wells

The following sections describe the components. Details of Alternative 9A are illustrated on Figure 4-17.

Road Improvement

Forest Service road FDR-732 is used to access the Standard Mine. Because the road is not regularly maintained, improvements may be required to facilitate construction activities. A grader, front-end loader, and bull dozer would be mobilized to improve road conditions along with clearing and constructing ditches, where necessary, along approximately 5 miles of FDR-732. Road improvements were estimated to require about 10 working days.

Site Preparation

A drilling pad would be constructed at each of the well locations. This would entail cutting access roads and providing a relatively flat area large enough for the drill rig and associated activities required to install the wells.

Horizontal Well Installation

Horizontal extraction wells would be installed on both sides and upslope of the mine workings. Approximately 12 to 15 horizontal wells with lengths of about 300 feet would be installed at an angle of 5 to 10 degrees above horizontal. Screened HDPE casing would be installed within the wells to enhance flow. The wells would discharge into a header pipe system.

Pipe System Construction

Water collected from the extraction wells would be conveyed away from the mine workings through a HDPE header pipe system. The water would be discharged into Elk Creek below Level 1. The water quality of discharge from the horizontal wells would be monitored to evaluate if treatment is required. Treatment considerations have not been included in this alternative.

Maintenance

Maintenance would include system inspections and reviews, road maintenance, and collection pipeline maintenance and replacement as needed.

4.9.2.2 Alternative 9B Description – Vertical Extraction Wells

Alternative 9B consists of installing a series of vertical extraction wells from the ground surface on both sides of the mine workings. The wells would be spaced approximately 200 feet with a range in depth from 50 to 300 feet. Water from the extraction wells would be pumped into a piping collection and conveyance system.

The major components of Alternative 9B include the following.

- Road improvements
- Site preparation including construction of access roads and drilling pads
- Install vertical extraction wells
- Install a power supply system and submersible pumps
- Construct a piping system to convey water collected by the vertical extraction wells

The following sections describe the components. Details of Alternative 9B are illustrated on Figure 4-18.

Road Improvement

Forest Service road FDR-732 is used to access the Standard Mine. Because the road is not regularly maintained, improvements may be required to facilitate construction activities. A grader, front-end loader, and bull dozer would be mobilized to improve road conditions along with clearing and constructing ditches, where necessary, along approximately 5 miles of FDR-732. Road improvements were estimated to require about 10 working days.

Site Preparation

A drilling pad would be constructed at each of the well locations. This would entail cutting access roads and providing a relatively flat area large enough for the drill rig and associated activities required to install the wells.

Vertical Extraction Well Installation

Approximately 10 to 12 vertical extraction wells would be drilled to depths ranging from 50 to 300 feet. The vertical wells would be installed from Level 2 to Level 5 on both the sides mine workings at approximately 200 foot intervals. Each well would have a submersible pump with a float switch. Screened HDPE casing would be installed within the wells to assist with pump installation, operation, and maintenance. The screened riser would be connected to a header pipe system as described below.

Pumps and Power Supply System

Submersible pumps capable of lifting water approximately 500 feet would be placed in each well. The wells would be cased and anchored to concrete footings for protection against weather and vandalism.

Power for pump operation would be provided by a solar panel installed at each well location and secured to the protective casing. Power would be supplied to each well independently for improved overall reliability.

Other options for power would be to access power from the Mt. Emmons Project facility via power poles or a buried line and/or generators. The solar panels would require less maintenance than a power pole system and comparable maintenance to a buried power line. Generators would be less capital expense than the solar panels, but would incur higher operation and maintenance costs, particularly in harsh winter conditions. Solar panels have been successfully implemented at the site for a biochemical reactor pilot study. The cost estimate for this alternative was based on installing a solar panel powering system.

Pipe System Construction

Water collected from the extraction wells would be conveyed away from the mine workings through a header pipe system. The water would be discharged into Elk Creek below Level 1 or delivered to a treatment facility. The water quality of discharge from the vertical wells would be monitored to determine if treatment is required. The quality of water was assumed to be sufficient for discharge into Elk Creek. Treatment considerations have not been included in this alternative.

Maintenance

Maintenance would include system inspection, pump maintenance and replacement as needed, collection pipeline maintenance and replacement as

needed, solar panel maintenance and replacement as needed, and road maintenance.

4.10 ALTERNATIVE 10 – CONTAMINATION SOURCE CONTROL AT LEVEL 2

Alternative 10 includes removal of mine debris along with pressure grouting and capping of contaminating sources or "hot-spots" within and accessible from the Level 2 adit. Typically, these hot-spots were observed in unmined portions of the mineralized zones, within plugged ore chutes, and as muck piles in the mine workings.

4.10.1 Rationale for Inclusion of Alternative 10

USGS and DRMS studies have indicated that contamination occurs as water flows from Level 3 through the workings toward Level 1 (USGS 2009; USGS 2010a; USGS 2010b; DRMS 2009). The most highly contaminated water was found coming from ore left in ore chutes, stoped areas, and muck piles within the workings, indicating that removal and/or capping of these "hot spots" may reduce contamination of water flowing through the workings.

4.10.2 Alternative 10 Description

Historic cross sections and observations from DRMS indicate Level 2 has about 1,200 feet of main drifting with approximately 350 feet of other drifts (Carpenter 1958; DRMS 2009). The conditions of Level 2 documented by DRMS in 2009 only represent approximately 500 feet of the central portion of the main drift and about 350 feet of other drifting. The remainder of the tunnel was not investigated due to pooled water and collapsed timbers that created unsafe conditions. As a result, additional investigations of Level 2 are needed to estimate the extent of contaminating sources within the portions of the adit that were not observed during the DRMS surveys. Engineering judgment was used to identify target zones within the evaluated areas of Level 2.

The major components of Alternative 10 include the following.

- Road improvements
- Rehabilitate the Level 2 portal and adit to facilitate construction activities
- Drain pooled water from behind the collapsed Level 2 portal
- Remove debris in the adit, including timbers, pipe, mining waste, rock piles, and clearing the adit floor
- Remove the collapse at the northeast end of Level 2 to facilitate identification of additional contaminating sources
- Investigate the Level 2 adit to confirm and identify additional target zones for capping and pressure grouting
- Seal ore chutes and grout associated stoped areas
- Pressure grout and cap sources of contamination
- Channelize Level 2 drainage to Level 1

The following sections describe the components. Details of Alternative 10 are illustrated on Figures 4-19 and 4-20.

Road Improvement

Forest Service road FDR-732 is used to access the Standard Mine. Because the road is not regularly maintained, improvements may be required to facilitate construction

activities. A grader, front-end loader, and bull dozer would be mobilized to improve road conditions along with clearing and constructing ditches, where necessary, along approximately 5 miles of FDR-732. Road improvements were estimated to require about 10 working days.

Portal and Adit Rehabilitation

The portal at Level 2 has collapsed and is inaccessible from the surface. Prior to re-opening the portal, the water pooled behind the collapsed material would have to be drained. Exploratory holes would be drilled from the surface between Levels 2 and 3 to provide surface access to the pooled water. The pool would then be drained using submersible pumps. The drill holes would be grouted closed to reduce infiltration into the workings.

The collapsed material would be excavated and the portal would be reconstructed using a large diameter CMP with steel sets for the adit back and CMUs for the adit ribs, as shown on Figure 4-11. A gate would be installed at the portal to provide controlled access into the workings.

The adit would be rehabilitated, as needed, to provide a safe working environment. Rehabilitation would be accomplished by placing steel sets and/or timber cribbing where necessary. Existing collars and timbering around the back, ribs, raises, and winzes of the adit would be removed and replaced where needed. The adit floor would be cleared of mine debris and any observable contaminating material that is easily removed. The mine debris would consolidated within the adit out of the way of construction activities.

Blockage Removal

The blockage observed by DRMS on the northeast end of Level 2 would be removed to allow additional contaminating sources to be identified. Identified sources would be considered target zones for pressure grouting and capping.

Blockage removal would begin with an investigation to determine if water is present behind the blockage. If water is present it will be drained prior to removal of blockage. DRMS observations indicate that the drift becomes “drier” towards the northeast end of the adit (DRMS 2009). It was assumed for development of this alternative that no water is present behind the blockage. The blockage would be removed with standard mining reclamation techniques. The adit also requires reinforcement and stabilization to protect against instability in the vicinity of the collapsed zone.

Investigation of Level 2

Investigations would be conducted during rehabilitation of the adit to identify additional sources of contamination. Visual observations, sampling, and geochemical testing would be conducted to analyze potential sources other than those previously identified by DRMS and USGS (USGS 2009; DRMS 2007; DRMS 2009).

Sealing and Grouting of Stoped Ore Chutes

DRMS observed approximately 16 ore chutes on Level 2. The ore chutes may have been used as draw points for blasted ore in stoped areas adjacent to the drift. For development of this alternative, a stoped area was estimated to be located above each of the 16 observed ore chutes. The ore chutes would be sealed and the stoped areas would be grouted to reduce water interaction with the exposed mineralized materials in the stoped areas.

A form would be constructed in each ore chute to retain grout. A grout hole would be drilled into the stoped areas through the adit rib. A grouting pipe (i.e. tremmie) would be extended into the stoped area and grout would be pumped in stages to fill the area. For purposes of cost development, the size of each stoped area was estimated to be 25 feet tall by 10 feet wide by 20 feet long. Ore chutes and stoped areas would be examined during the investigation of Level 2 prior to completing the final design for sealing and grouting the areas.

Pressure Grouting and Capping

A portion of the adit would be pressure grouted to minimize groundwater flow into and through potentially contaminating bedrock. It was assumed 20 percent, or approximately 320 feet, of the adit has potentially contaminating bedrock that would be targeted for pressure grouting. Drill holes would be extended approximately 20 feet into target zones at two foot intervals along the ribs and back of the adit, as shown on Figure 4-20. A total of 12 grout holes would be drilled in each target zone. The target zones would be stationed at 10 foot intervals (approximate) along the 320 feet of adit.

The entire adit would be capped with shotcrete to limit exposure of the ribs and back to air and adit water. Shotcrete would be applied approximately 4 to 6 inches thick.

Level 2 Discharge Channelization

Drainage from Level 2 would be conveyed via a lined open channel to Elk Creek below Level 1. The water quality of the drainage from Level 2 would require monitoring to determine if treatment is necessary. Treatment was not included as part of this alternative.

Maintenance

Maintenance would include system inspections, replacement of grout and shotcrete in problem areas, channel cleanout and repair, road maintenance, and periodic adit rehabilitation.

4.11 ALTERNATIVE 11 – SOIL AMENDMENT AND REVEGETATION

Alternative 11 includes amending waste rock with lime, organic matter (compost), and fertilizer and revegetating the resulting soil. This alternative was evaluated for treatment of Level 5 and Level 98 waste rock. The adit discharge water would be channelized to prevent contact with the waste rock.

4.11.1 Rationale for Inclusion of Alternative 11

Prior to implementation of the Removal Actions at the Standard Mine, EPA determined that Levels 1, 2, and 3 were priorities for waste rock removal and that disturbing the waste rock at Levels 5 and 98 was likely to cause environmental damage, including damage to sensitive wetland areas, in excess of the improvements that would be realized by removing the materials for placement in the on-site repository. After removing the waste rock at Levels 1, 2, and 3, EPA amended the remaining soils/waste rock and revegetated the disturbed areas (UOS 2008). The results of the work were evaluated during 2009. Areas that were amended and subsequently seeded with a mixture of slender wheatgrass and native seeds showed cover of vegetation that met the desired performance standards. Areas that had not been seeded or had not been treated did not contain a significant amount of vegetation. A pilot-scale study indicated the success of

treating waste rock with lime and organic soil amendments to reduce contaminant mobility and allow establishment of a vegetative cap (REAC 2009).

4.11.2 Alternative 11 Description

The suggested method for implementing Alternative 11 is that used for Levels 1, 2, and 3 reclamation efforts.

The major components of Alternative 11 include the following.

- Minor road improvements
- Transport soil amendments to the site using small-scale equipment
- Spread lime and fertilizer and incorporate into the waste rock to a depth of at least three feet using small scale equipment
- Spread compost and incorporate into the waste rock to a depth of at least one foot
- Stabilize banks adjacent to Elk Creek using coir log
- Seed with slender wheatgrass and a native seed mix similar to that used at Levels 1, 2, and 3 and mulch
- Install ditches to convey adit discharge around the treated soils
- Monitoring

The following sections describe the primary work elements.

Road Improvement
Forest Service road FDR-732 is used to access the Standard Mine. Because the road is not regularly maintained, improvements may be required to facilitate construction activities. A grader, front-end loader, and bull dozer would be mobilized to improve road conditions along with clearing and constructing ditches, where necessary, along approximately 5 miles of FDR-732. Road improvements were estimated to require about 10 working days. The current road used to access Level 98 would require minor improvements to allow small-scale equipment access.

Soil Amendments
Lime, fertilizer, and compost would be added at the same rates identified in the Reclamation Plan that was used for guiding efforts at Levels 1, 2, and 3 after the Removal Action (UOS 2008). The lime application rate would be calculated based on the acid base account data to ensure neutralization of both the active and potential soil acidity. The fertilizer application rate would be aimed at both providing soil nutrients and reducing contaminant mobility. The compost application rate would achieve a two percent organic carbon content to a depth of one foot in the treated soil. All of the amendment rates would include reduction in amendment quantities for the “rocky” portions of the soil.

Amendment Incorporation
The lime and fertilizer would be spread across the surface at the prescribed rate and incorporated into the waste rock to a depth of three feet. Then the organic material would be added and incorporated into the waste rock to a depth of one foot.

Coir Log
Heavy duty coir log would be placed along portions of Elk Creek that abut the existing waste rock to ensure fine waste rock does not flow into Elk Creek prior to establishment

of a lush vegetative cover. Coir log may also be placed to direct Level 98 discharge water around the waste rock. Native transplants may also be used for bank stabilization.

Seeding

The area would be seeded with a mixture of slender wheatgrass and native species. Native transplants may also be used for revegetation.

Ditches and Erosion Control Features

Ditches would be installed to ensure adit discharges do not contact the waste rock.

Monitoring

A monitoring program would be developed to determine if an adequate vegetative cover has developed and continues successfully.

Maintenance

Maintenance would include system inspections, re-application of soil amendments and re-seeding where needed, replacement of coir log where needed, and channel maintenance.

Map Document: M:\SuperFunMine\ArcMap\SystemGPM\11x17_SystemLayout_AvailableAreal.mxd / Modified 12/16/2009 4:21:28 PM / Plotted 12/16/2009 4:21:28 PM by AReither

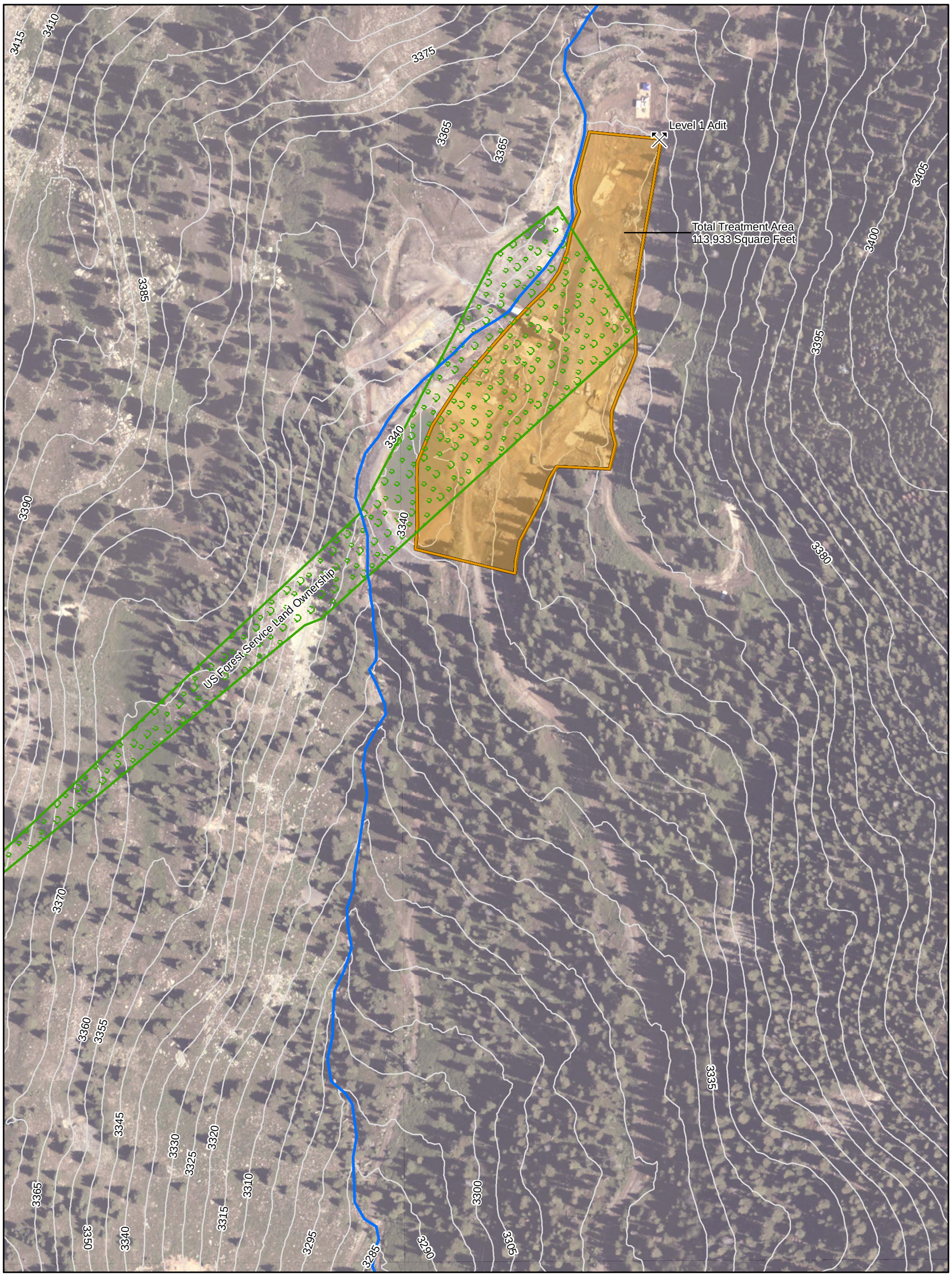

150 75 0 150 FEET

SCALE 1:1,800 1 INCH = 150 FEET
WHEN PRODUCED AT SIZE 11X17IN

N

LEGEND

- Level 1 Adit
- Elk Creek
- Contour - 5 Meter Interval
- Total Treatment Area
- US Forest Service Land Ownership

NOTE

This figure prepared for Pacific Western Technologies Ltd.

REFERENCES

Aerial Imagery, Contours, Survey Data: UOS Inc., Recieved August 2009.
Projection: StatePlane, Colorado Central, NAD83, Feet.

PROJECT

PACIFIC WESTERN TECHNOLOGIES LTD.
STANDARD MINE SUPER FUND SITE
CRESTED BUTTE, CO

TITLE

AVAILABLE LAND FOR A PTS

Golder Associates
Denver, Colorado

PROJECT No.		093-81796	FILE No.	SystemLayout_AvailableArea.mxd
DESIGN	PS	09/21/2009	SCALE AS SHOWN	REV 0
GIS	AR	09/21/2009	FIGURE 4-1	
CHECK	PS	09/21/2009		
REVIEW	TR	10/14/2009		

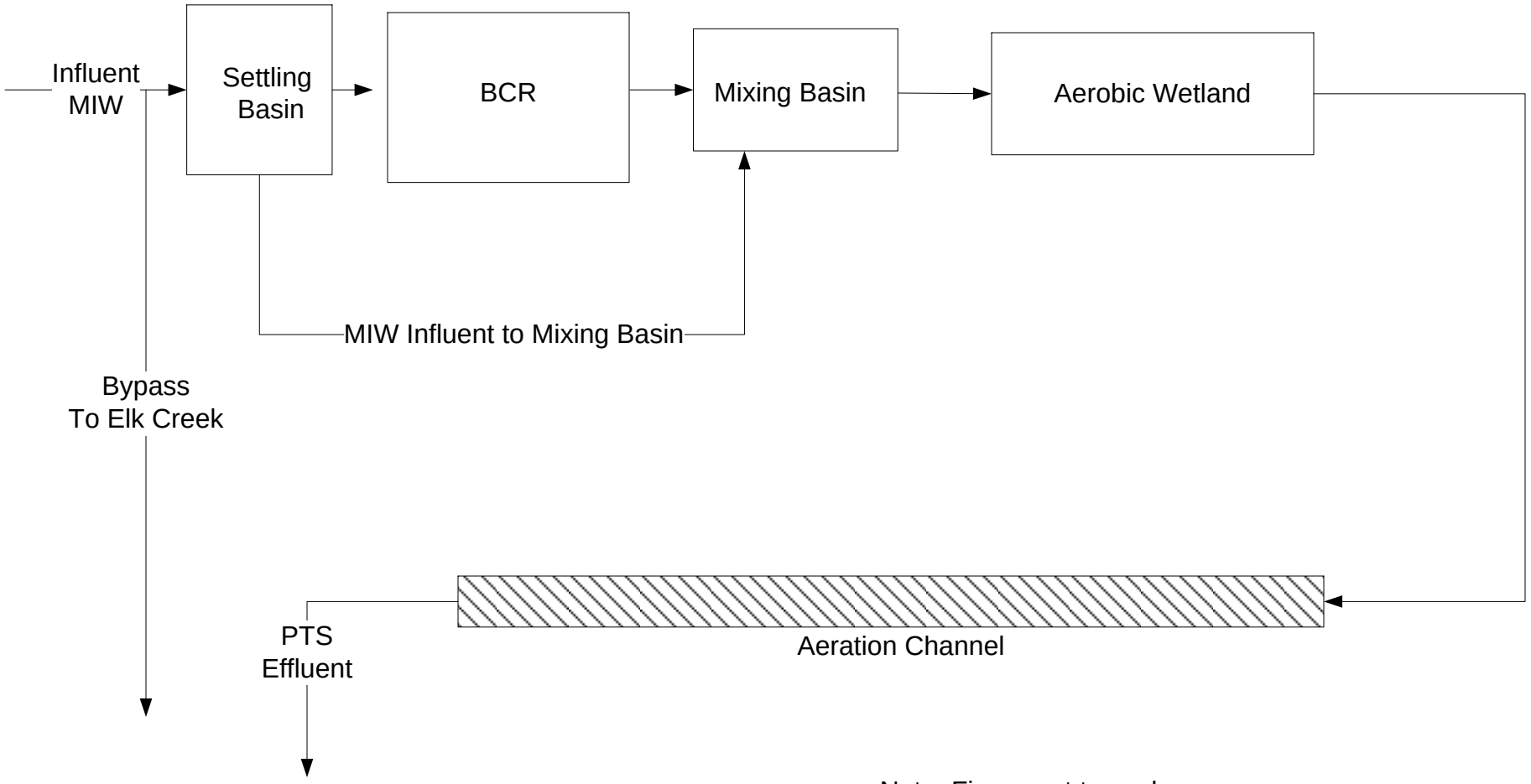

Note: Figure not to scale.
Figure prepared for Pacific Western Technologies Ltd.

Golder Associates Denver, Colorado

TITLE

Process Flow Diagram for Alternative 3A

CLIENT/PROJECT

Standard Mine Superfund Site
Feasibility Study Report

DRAWN	PCS	DATE	12/17/2009	JOB NO.	093-81796
CHECKED	TLR	SCALE	Not To Scale	DWG. NO.	NA
REVIEWED	JJG	FILE NO.	NA	FIGURE NO.	4 - 2

Map Document: M:\SuperFunMine\ArcMap\SystemGPM\11x17_SystemLayout_20gpmVertical.mxd / Modified 3/2/2010 3:32:58 PM / Plotted 3/2/2010 3:32:58 PM by aratke

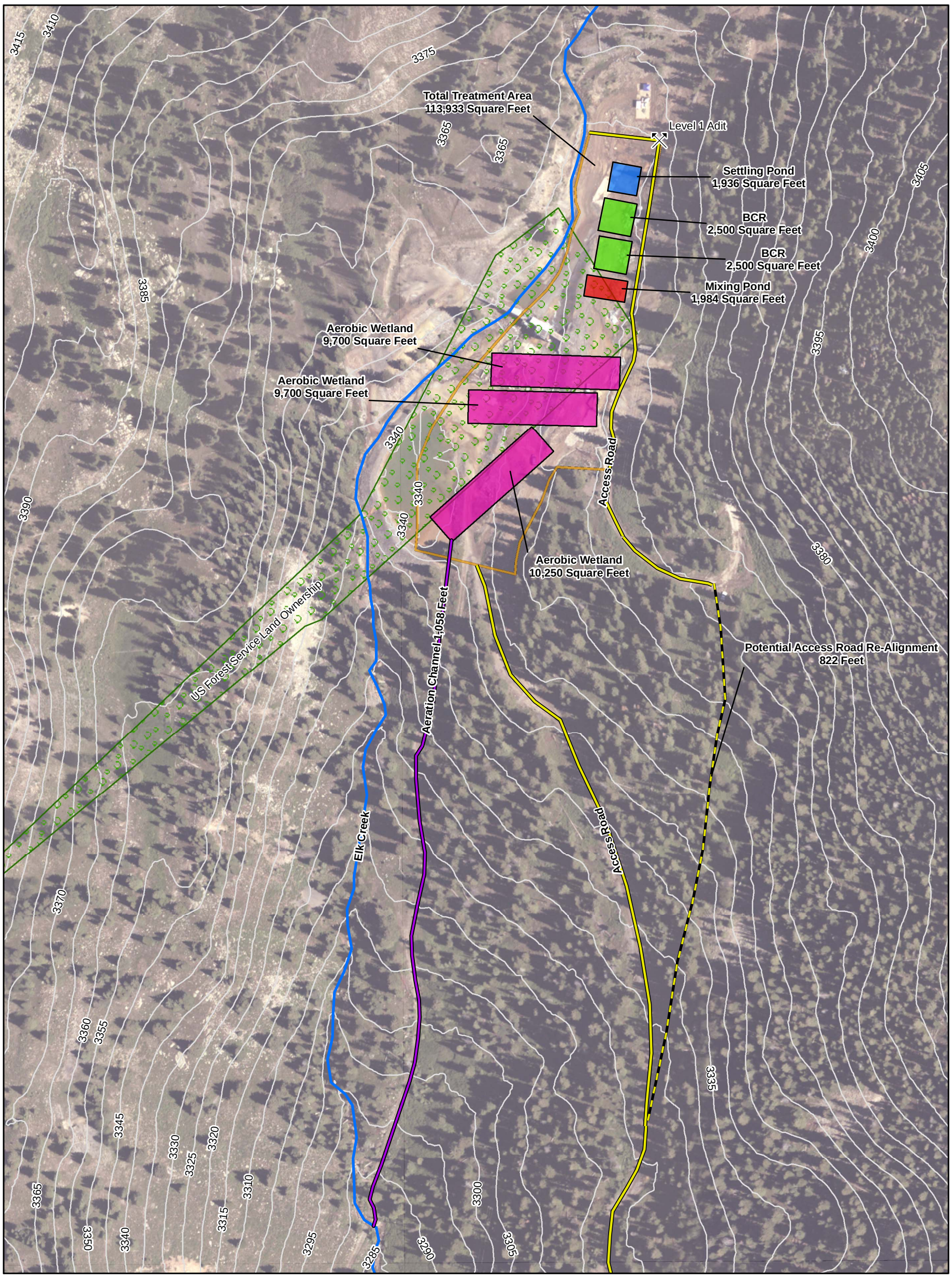

150 75 0 150 FEET

SCALE 1:1,800 1 INCH = 150 FEET
WHEN PRODUCED AT SIZE 11X17IN

N

LEGEND

- Level 1 Adit
- Aeration Channel
- Potential Access Road Re-Alignment
- Existing Access Road
- Elk Creek
- Contour - 5 Meter Interval
- Aerobic Wetlands
- Total Treatment Area
- BCR
- Mixing Pond
- Settling Pond
- US Forest Service Land Ownership

NOTE

This figure prepared for Pacific Western Technologies Ltd.

REFERENCES

20 GPM Layout: Golder, 2009.
Aerial Imagery, Contours, Survey Data: UOS Inc., Recieved August 2009.
Projection: StatePlane, Colorado Central, NAD83, Feet.

PROJECT

PACIFIC WESTERN TECHNOLOGIES LTD.
STANDARD MINE SUPER FUND SITE
CRESTED BUTTE, CO

TITLE

ALTERNATIVE 3A
(20 GPM) SIZING AND LAYOUT

Golder Associates
Denver, Colorado

PROJECT No.		093-81796	FILE No. SystemLayout_20GPMVertical.mxd	
DESIGN	PS	09/21/2009	SCALE AS SHOWN	REV 0
GIS	AR	09/21/2009		
CHECK	PS	09/21/2009	FIGURE 4-3	
REVIEW	TR	10/14/2009		

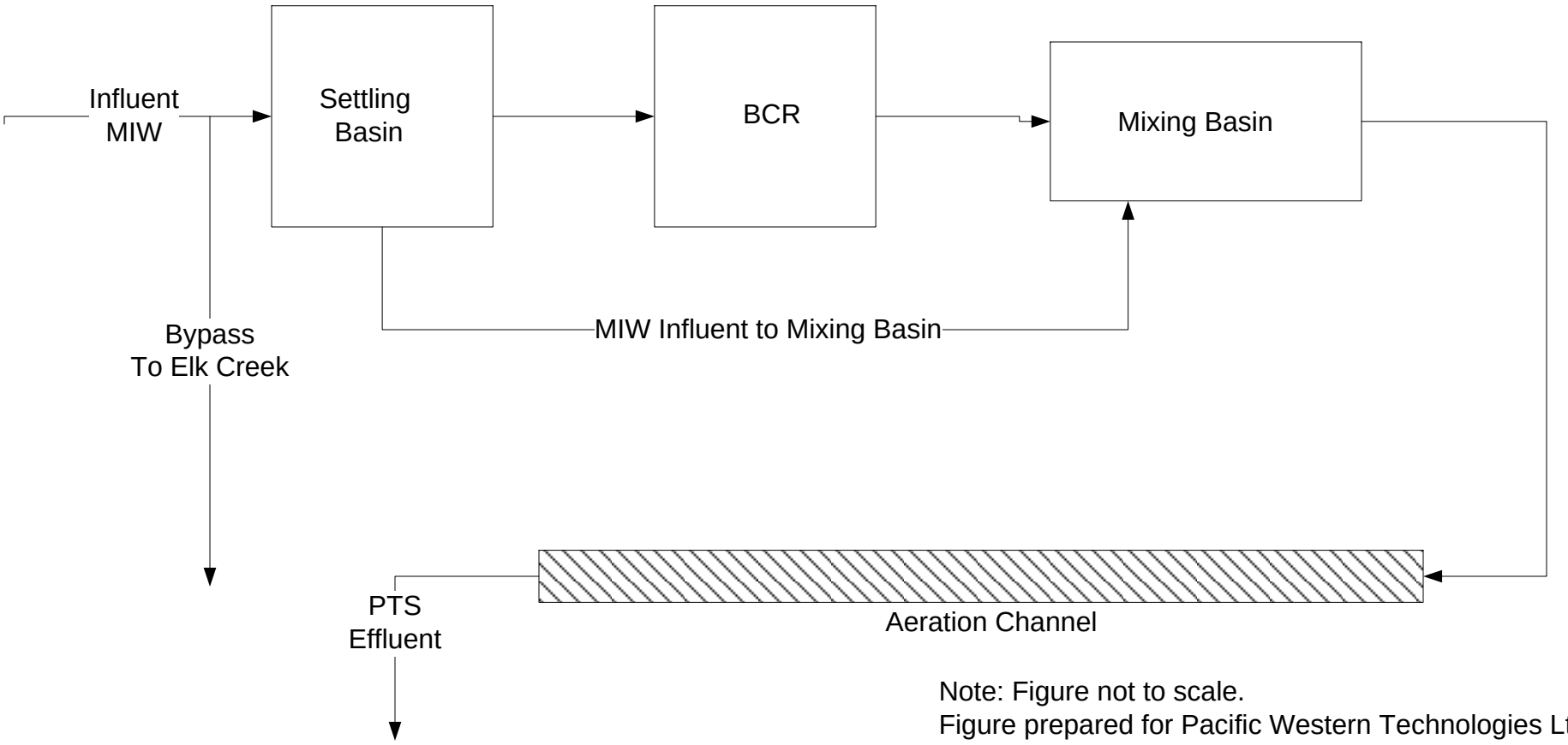

Note: Figure not to scale.
Figure prepared for Pacific Western Technologies Ltd.

Golder Associates
Denver, Colorado

TITLE
Process Flow Diagram for Alternatives 3B, 3C, and 3E

CLIENT/PROJECT
Standard Mine Superfund Site
Feasibility Study Report

DRAWN	PCS	DATE	12/17/2009	JOB NO.	093-81796
CHECKED	TLR	SCALE	Not To Scale	DWG. NO.	NA
REVIEWED	JJG	FILE NO.	NA	FIGURE NO.	4 - 4

Map Document: M:\SuperFunMine\ArcMap\SystemGPM\11x17_SystemLayout_50gpmVertical.mxd / Modified 3/2/2010 3:10:00 PM / Plotted 3/2/2010 3:10:00 PM by aratke

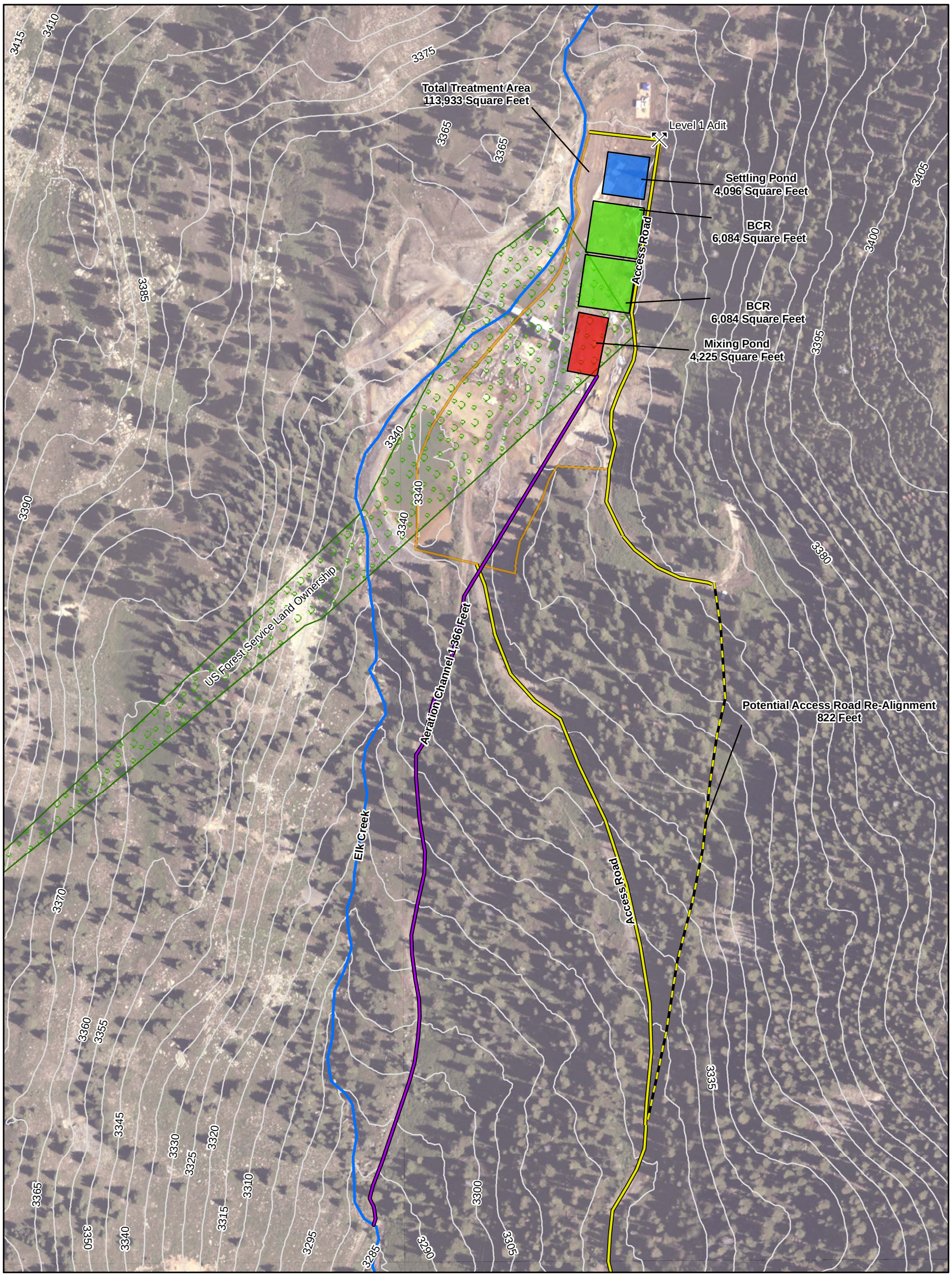

150 75 0 150 FEET

SCALE 1:1,800 1 INCH = 150 FEET
WHEN PRODUCED AT SIZE 11X17IN

N

LEGEND

- Level 1 Adit
- Potential Access Road Re-Alignment
- Existing Access Road
- Elk Creek
- Aeration Channel
- Contour - 5 Meter Interval
- Total Treatment Area
- BCR
- Mixing Pond
- Settling Pond
- US Forest Service Land Ownership

NOTE

This figure prepared for Pacific Western Technologies Ltd.

REFERENCES

50 GPM Layout: Golder, 2009.
Aerial Imagery, Contours, Survey Data: UOS Inc., Recieved August 2009.
Projection: StatePlane, Colorado Central, NAD83, Feet.

PROJECT

PACIFIC WESTERN TECHNOLOGIES LTD.
STANDARD MINE SUPER FUND SITE
CRESTED BUTTE, CO

TITLE

ALTERNATIVE 3B
(50 GPM) SIZING AND LAYOUT

Golder Associates
Denver, Colorado

PROJECT No.		093-81796	FILENAME 11x17_SystemLayout_55GPMVertical.mxd
DESIGN	PS	09/21/2009	SCALE AS SHOWN REV 0
GIS	AR	09/21/2009	FIGURE 4-5
CHECK	PS	09/21/2009	
REVIEW	TR	10/14/2009	

Map Document: M:\SuperFunMine\ArcMap\SystemGPM\11x17_SystemLayout_160gpmVertical.mxd / Modified 3/2/2010 3:22:53 PM / Plotted 3/2/2010 3:22:53 PM by aratke

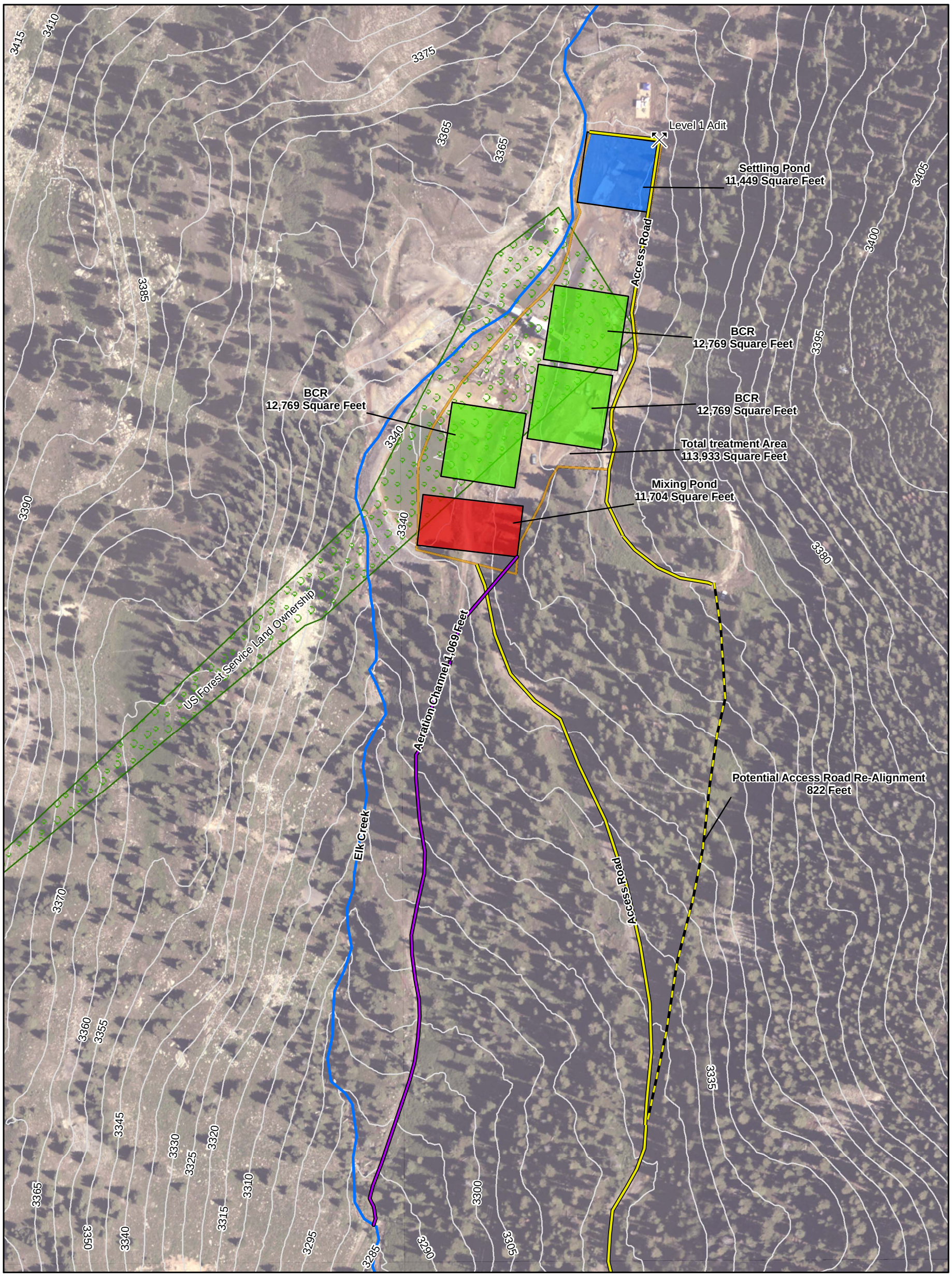

150 75 0 150 FEET

SCALE 1:1,800 1 INCH = 150 FEET
WHEN PRODUCED AT SIZE 11X17IN

N

LEGEND

- Level 1 Adit
- Potential Access Road Re-Alignment
- Existing Access Road
- Elk Creek
- Aeration Channel
- Contour - 5 Meter Interval
- Total Treatment Area
- BCR
- Mixing Pond
- Settling Pond
- US Forest Service Land Ownership

NOTE

This figure prepared for Pacific Western Technologies Ltd.

REFERENCES

160 GPM Layout: Golder, 2009.
Aerial Imagery, Contours, Survey Data: UOS Inc., Recieved August 2009.
Projection: StatePlane, Colorado Central, NAD83, Feet.

PROJECT

PACIFIC WESTERN TECHNOLOGIES LTD.
STANDARD MINE SUPER FUND SITE
CRESTED BUTTE, CO

TITLE

ALTERNATIVE 3C
(160 GPM) SIZING AND LAYOUT

Golder Associates
Denver, Colorado

PROJECT No.		093-81796	FILE No. SystemLayout_160GPMVertical.mxd	
DESIGN	PS	09/21/2009	SCALE AS SHOWN	REV 0
GIS	AR	09/21/2009	FIGURE 4-6	
CHECK	PS	09/21/2009		
REVIEW	TR	10/14/2009		

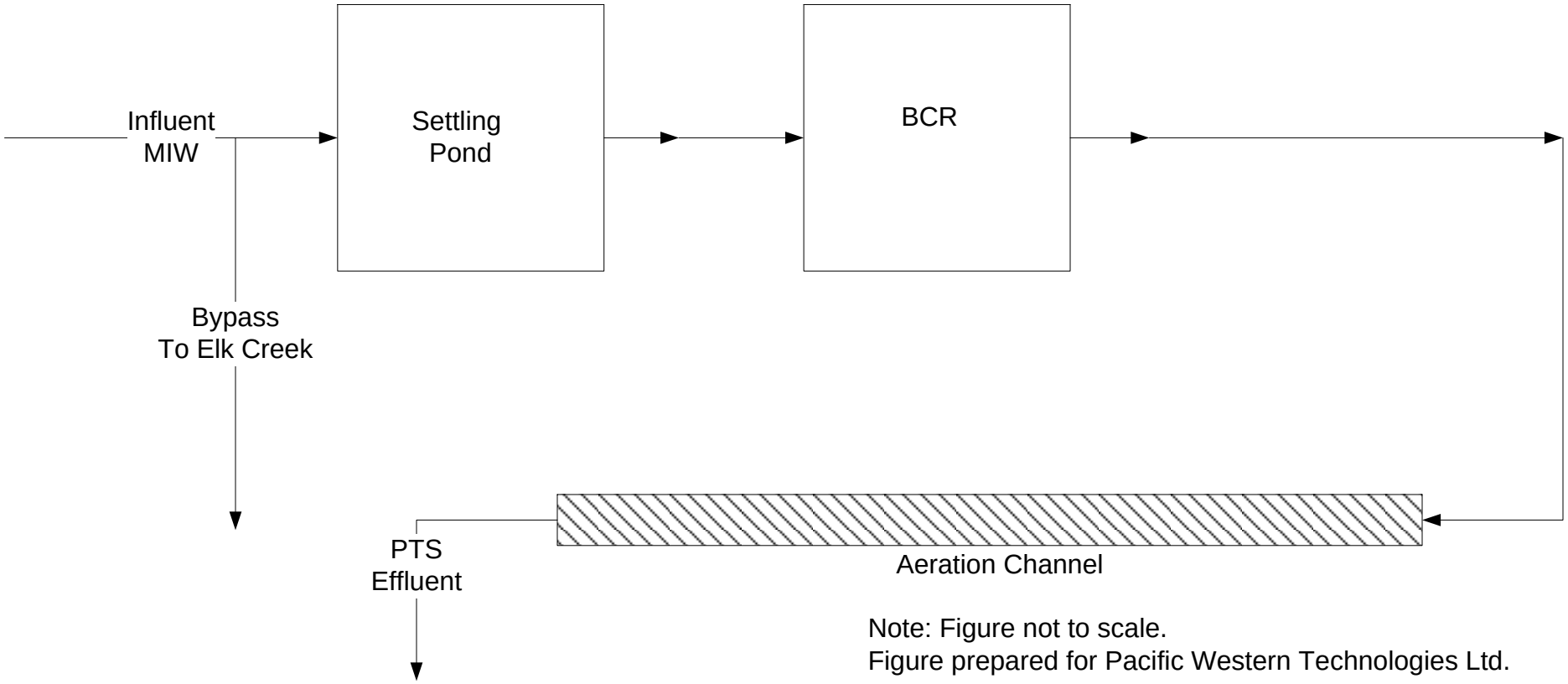

Note: Figure not to scale.
Figure prepared for Pacific Western Technologies Ltd.

Golder Associates
Denver, Colorado

TITLE
Process Flow Diagram for Alternative 3D

CLIENT/PROJECT
Standard Mine Superfund Site
Feasibility Study Report

DRAWN	PCS	DATE	12/17/2009	JOB NO.	093-81796
CHECKED	TLR	SCALE	Not To Scale	DWG. NO.	NA
REVIEWED	JJG	FILE NO.	NA	FIGURE NO.	4 - 7

Map Document: M:\SuperFunMine\ArcMap\SystemGPM\11x17_SystemLayout_125gpmVerticalNoMixing.mxd / Modified 3/2/2010 3:20:33 PM / Plotted 3/2/2010 3:20:33 PM by aratke

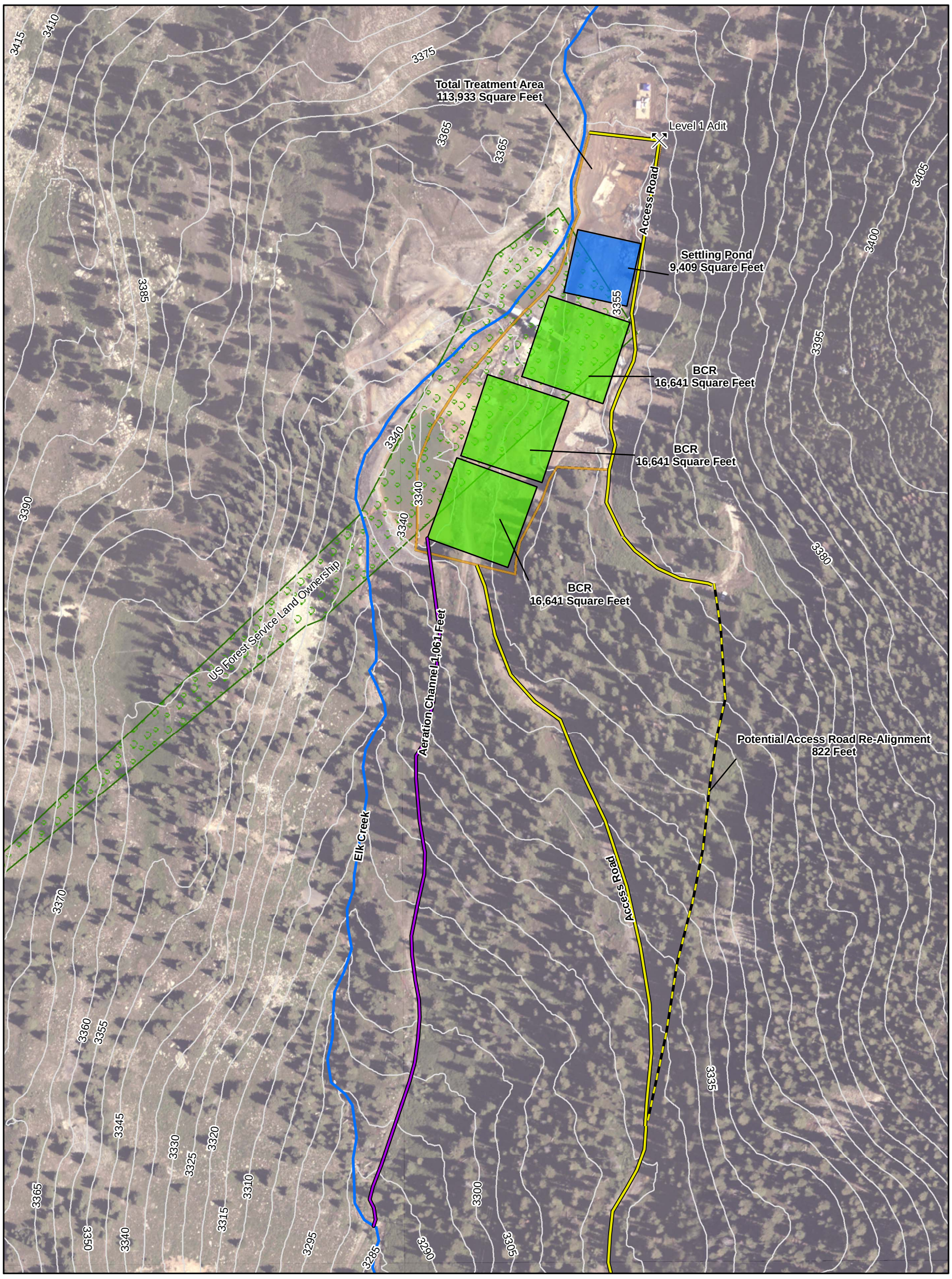

150 75 0 150 FEET

SCALE 1:1,800 1 INCH = 150 FEET
WHEN PRODUCED AT SIZE 11X17IN

N

LEGEND

- Level 1 Adit
- Potential Access Road Re-Alignment
- Existing Access Road
- Elk Creek
- Aeration Channel
- Contour - 5 Meter Interval
- Total Treatment Area
- BCR
- Mixing Pond
- Settling Pond
- US Forest Service Land Ownership

NOTE

This figure prepared for Pacific Western Technologies Ltd.

REFERENCES

125 GPM Layout: Golder, 2009.
Aerial Imagery, Contours, Survey Data: UOS Inc., Recieved August 2009.
Projection: StatePlane, Colorado Central, NAD83, Feet.

PROJECT

PACIFIC WESTERN TECHNOLOGIES LTD.
STANDARD MINE SUPER FUND SITE
CRESTED BUTTE, CO

TITLE

ALTERNATIVE 3D
(125 GPM) SIZING AND LAYOUT

Golder Associates
Denver, Colorado

PROJECT No.		093-81796	FILE No. SystemLayout_125GPMVerticalNoMixing.mxd	
DESIGN	PS	09/21/2009	SCALE AS SHOWN	REV 0
GIS	AR	09/21/2009		
CHECK	PS	09/21/2009	FIGURE 4-8	
REVIEW	TR	10/14/2009		

Map Document: M:\SuperFunMine\ArcMap\SystemGPM\11x17_SystemLayout_20gpmVerticalUSFS.mxd / Modified 3/2/2010 3:12:30 PM / Plotted 3/2/2010 3:12:30 PM by aratke

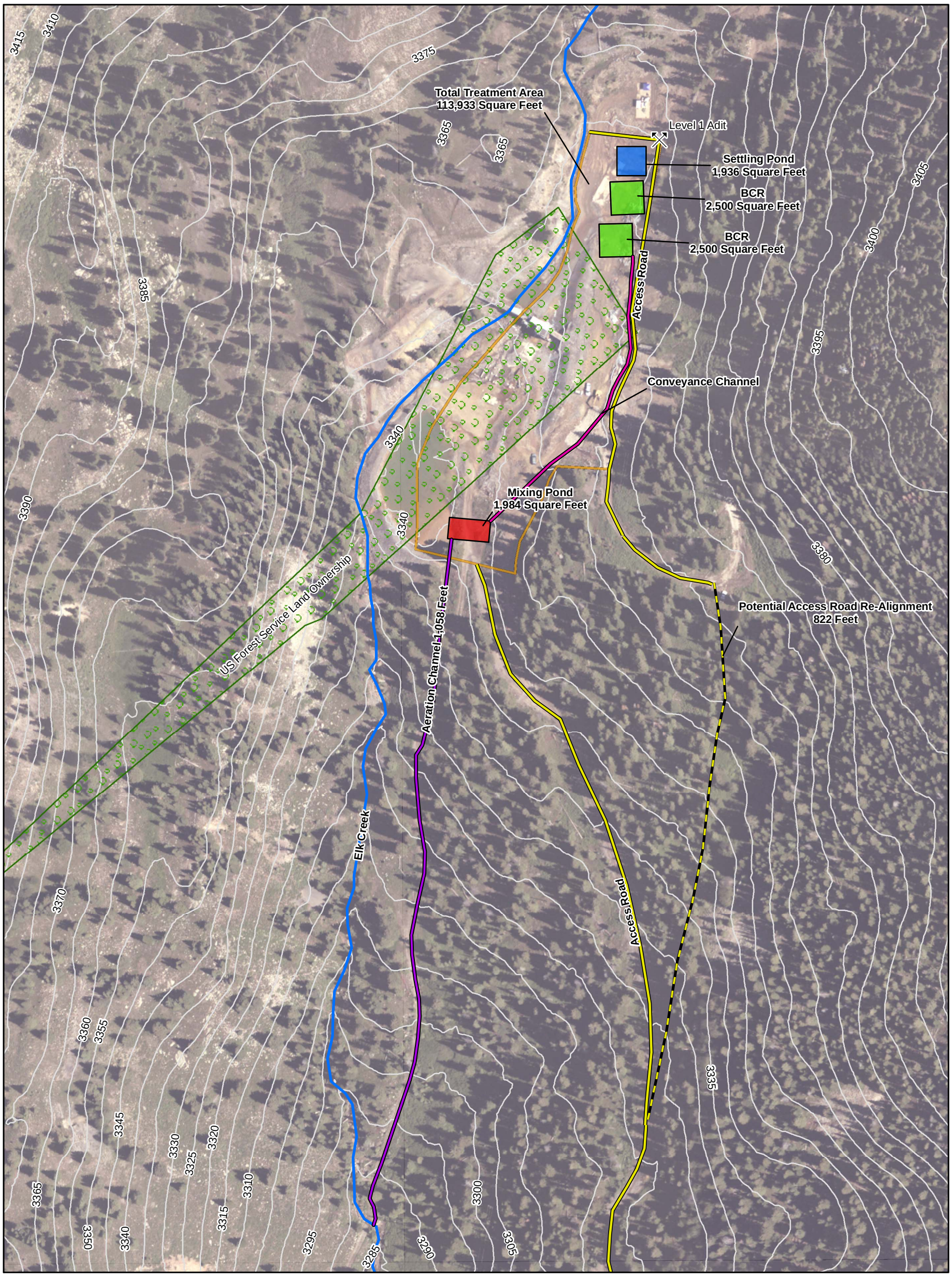

150 75 0 150 FEET

SCALE 1:1,800 1 INCH = 150 FEET
WHEN PRODUCED AT SIZE 11X17IN

N

LEGEND

- Level 1 Adit
- Potential Access Road Re-Alignment
- Existing Access Road
- Elk Creek
- Aeration Channel
- Conveyance Channel
- Contour - 5 Meter Interval
- Total Treatment Area
- BCR
- Mixing Pond
- Settling Pond
- US Forest Service Land Ownership

NOTE

This figure prepared for Pacific Western Technologies Ltd.

REFERENCES

20 GPM Layout: Golder, 2009.
Aerial Imagery, Contours, Survey Data: UOS Inc., Recieved August 2009.
Projection: StatePlane, Colorado Central, NAD83, Feet.

PROJECT

PACIFIC WESTERN TECHNOLOGIES LTD.
STANDARD MINE SUPER FUND SITE
CRESTED BUTTE, CO

TITLE

ALTERNATIVE 3E
(20 GPM ON NON USFS PROPERTY)
SIZING AND LAYOUT

Golder Associates
Denver, Colorado

PROJECT No.		093-81796	FILE No. SystemLayout_20GPMVertical.mxd	
DESIGN	PS	09/21/2009	SCALE AS SHOWN	REV 0
GIS	AR	09/21/2009		
CHECK	PS	09/21/2009	FIGURE 4-9	
REVIEW	TR	10/14/2009		

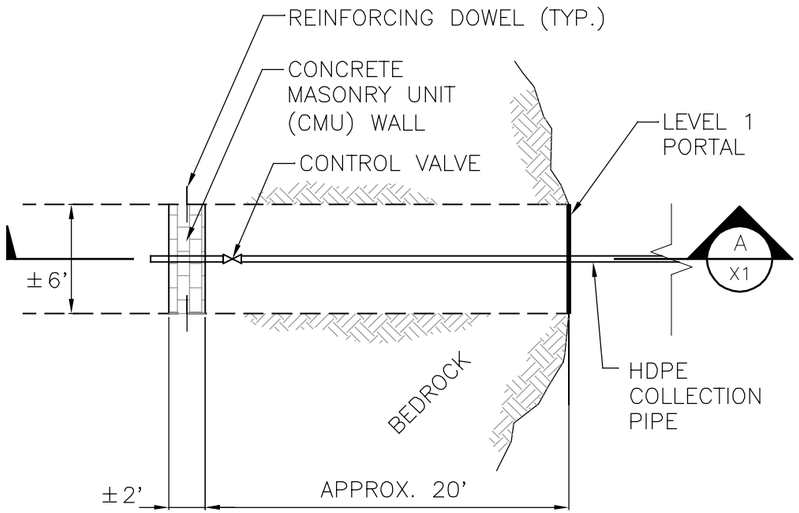

HEADWORKS PLAN (1 / 4-10)
NOT TO SCALE

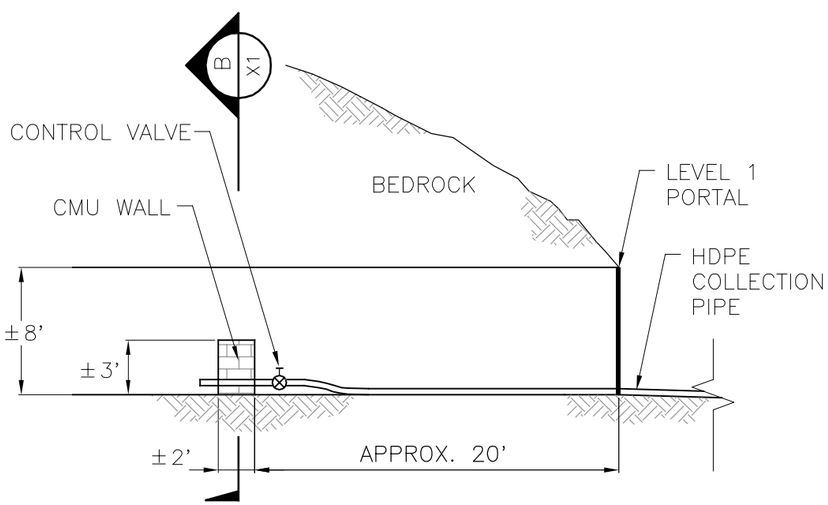

SECTION (A / 4-10)
NOT TO SCALE

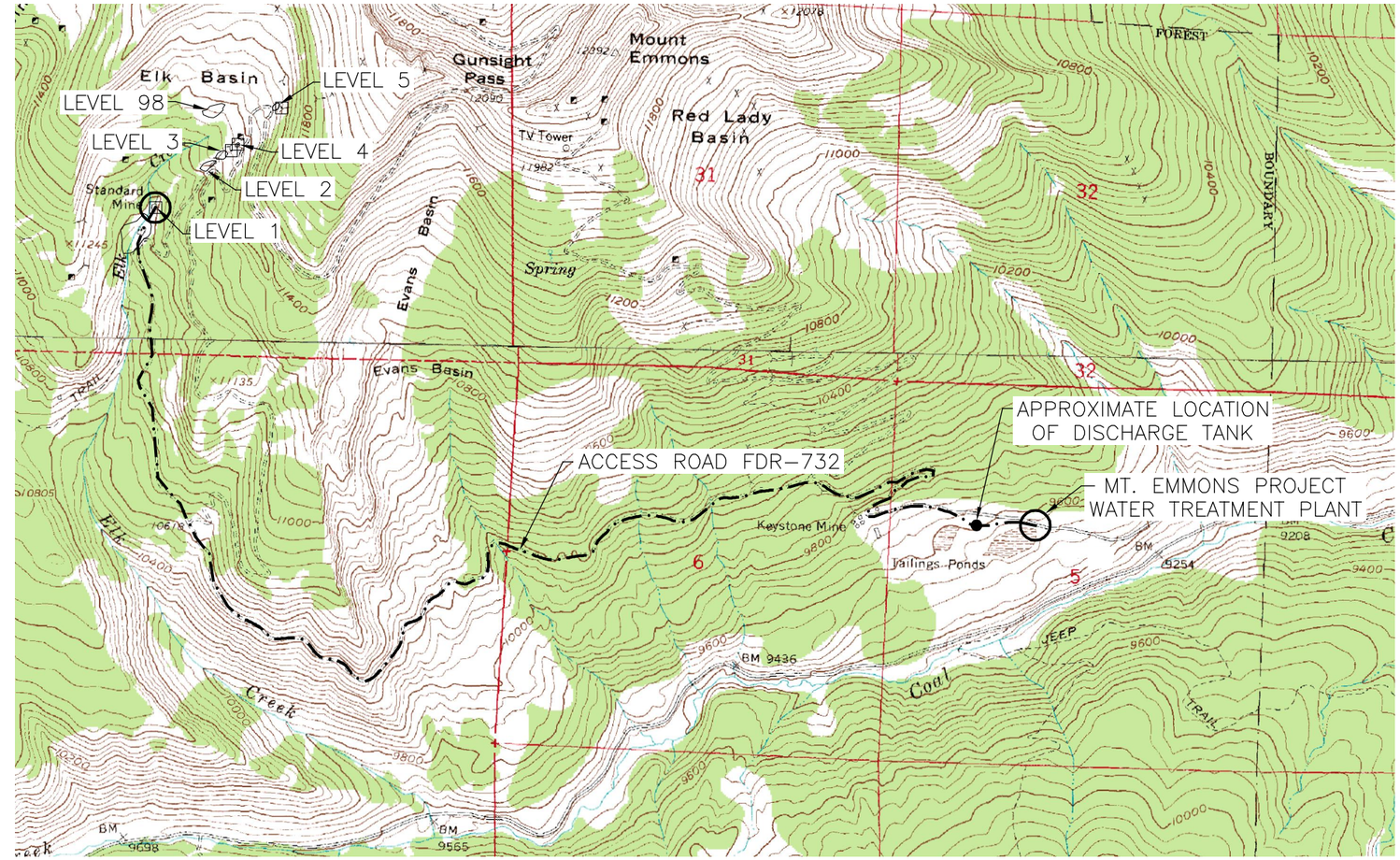

PIPELINE ALIGNMENT PLAN
0 1000 2000 3000
SCALE IN FEET

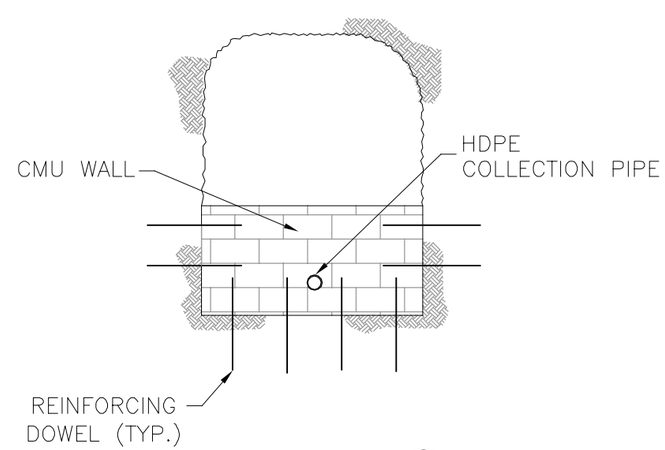

SECTION (B / 4-10)
NOT TO SCALE

LEGEND

⊡ LEVEL 1 — MINE PORTAL LOCATION

—·—·— APPROX. PIPELINE ALIGNMENT

N

NOTE:

1. BASE TOPOGRAPHY FROM USGS QUADRANGLE MAPS, COLORADO.

NOT FOR CONSTRUCTION

URS OPERATING SERVICES

STANDARD MINE
GUNNISON COUNTY, CO
Alternative 4
Mt. Emmons Project Water Treatment Plant
Figure 4-10

December 2009 — TDD No. 0608-07

MILLER, RANDY A, 12/10/2009 10:30 AM
DATE: 12/10/2009 RAM FILENAME: N:\Projects\22241112_Standard_Mine_RI_FSISub_0017.0_CAD_GIS\Analysis of Alternatives\Alternative 4\Alternative 4.dwg

MILLER, RANDY A, 12/10/2009 10:36 AM

URS DATE: 12/10/2009 RAM FILENAME: N:\Projects\22241112_Standard_Mine_RI_FS\Sub_00\7.0_CAD_GIS\Analysis of Alternatives\Typical Portal Gate Closure.dwg

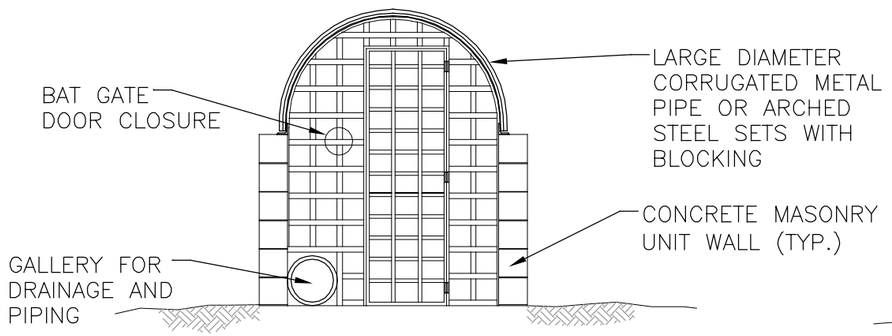

PORTAL GATE CLOSURE DETAIL (1 / 4-11)
NOT TO SCALE

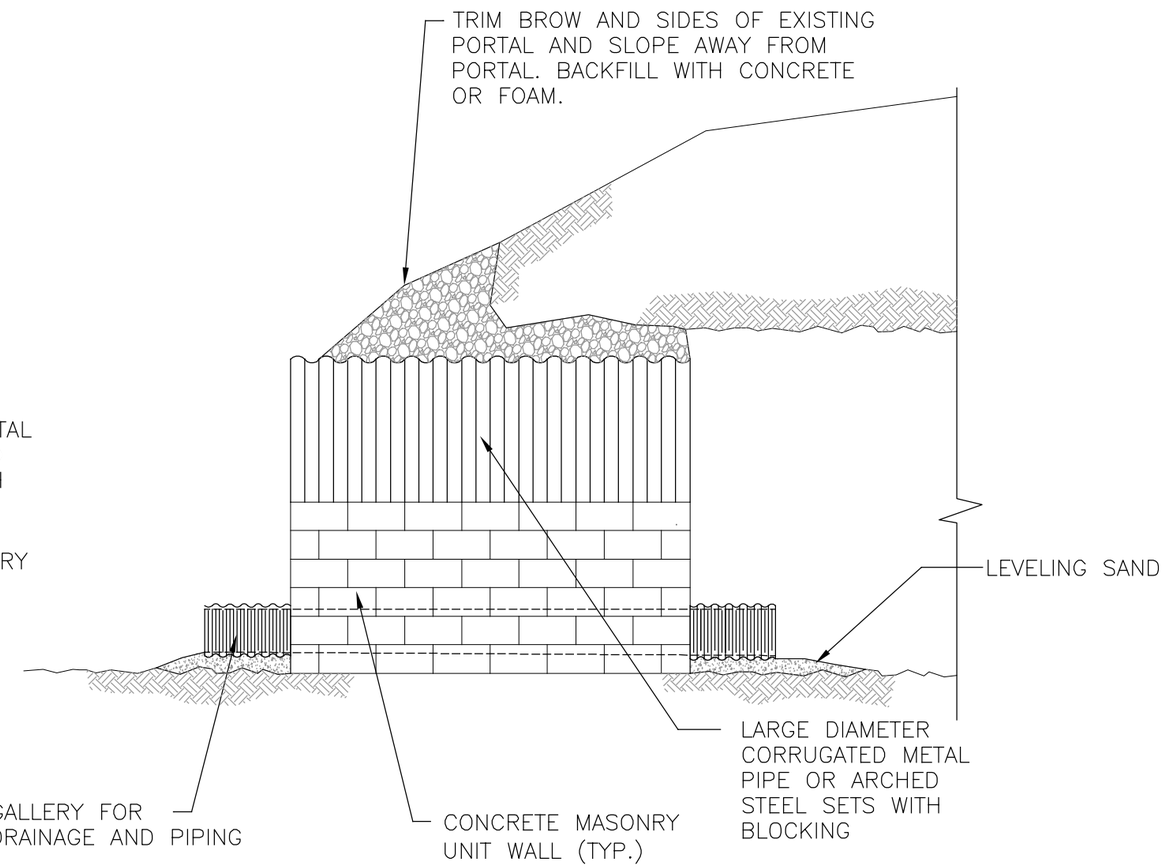

PORTAL GATE CLOSURE DETAIL (2 / 4-11)
NOT TO SCALE

NOTES:

1. A PORTAL GATE CLOSURE IS INCLUDED IN ALTERNATIVES 4, 5, 7, 8 AND 10.
2. NEW PORTAL CONSTRUCTED USING HALF OF A LARGE DIAMETER CORRUGATED METAL PIPE (CMP) AND CONCRETE MASONARY UNITS (CMU). CMP TO BE ANCHORED TO CMU WALLS. CMU WALLS TO BE MORTARED TOGETHER AND FILLED WITH CONCRETE AND REINFORCING STEEL. ARCHED STEEL SETS WITH BLOCKING MAY BE USED AS AN ALTERNATIVE TO CMP. BASE COURSE OF CMU'S TO BE PLACED IN LEVEL BED OF SAND.

NOT FOR CONSTRUCTION

URS OPERATING SERVICES

STANDARD MINE
GUNNISON COUNTY, CO

Typical Portal Gate Closure
Figure 4-11

December 2009 | TDD No. 0608-07

MILLER, RANDY A, 12/10/2009 3:11 PM

URS DATE: 12/10/2009 RAM FILENAME: N:\Projects\22241112_Standard_Mine_RI_FS\Sub_00\7.0_CAD_GIS\Analysis of Alternatives\Alternative 5\Alternative 5.dwg

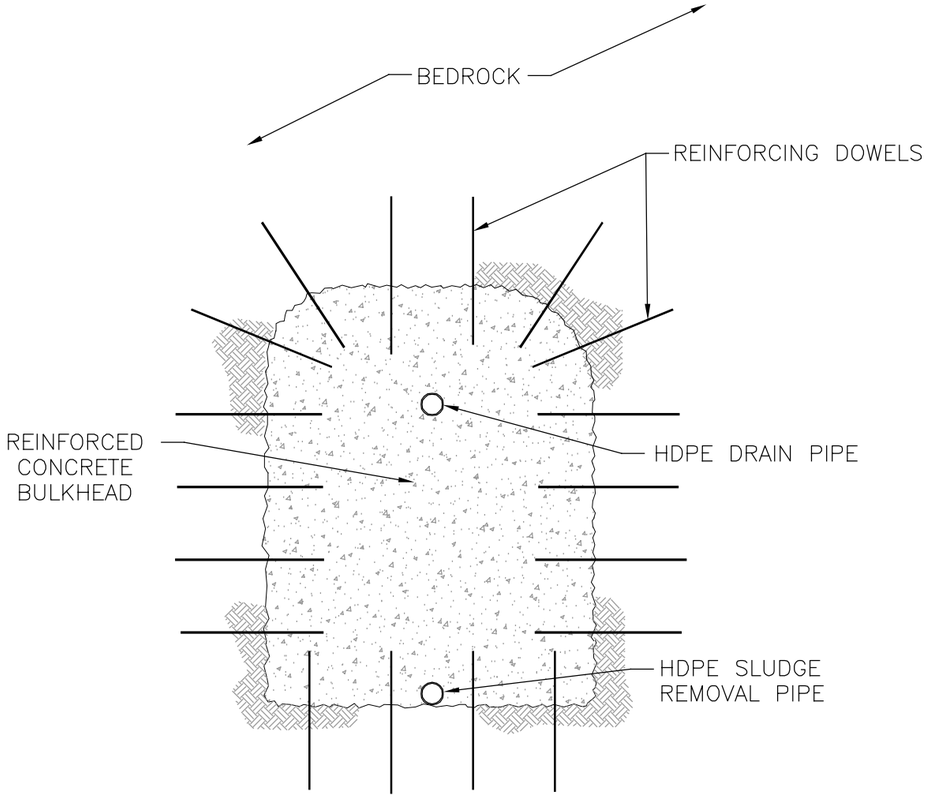

TYPICAL BULKHEAD FRONT VIEW (1 / 4-12)
NOT TO SCALE

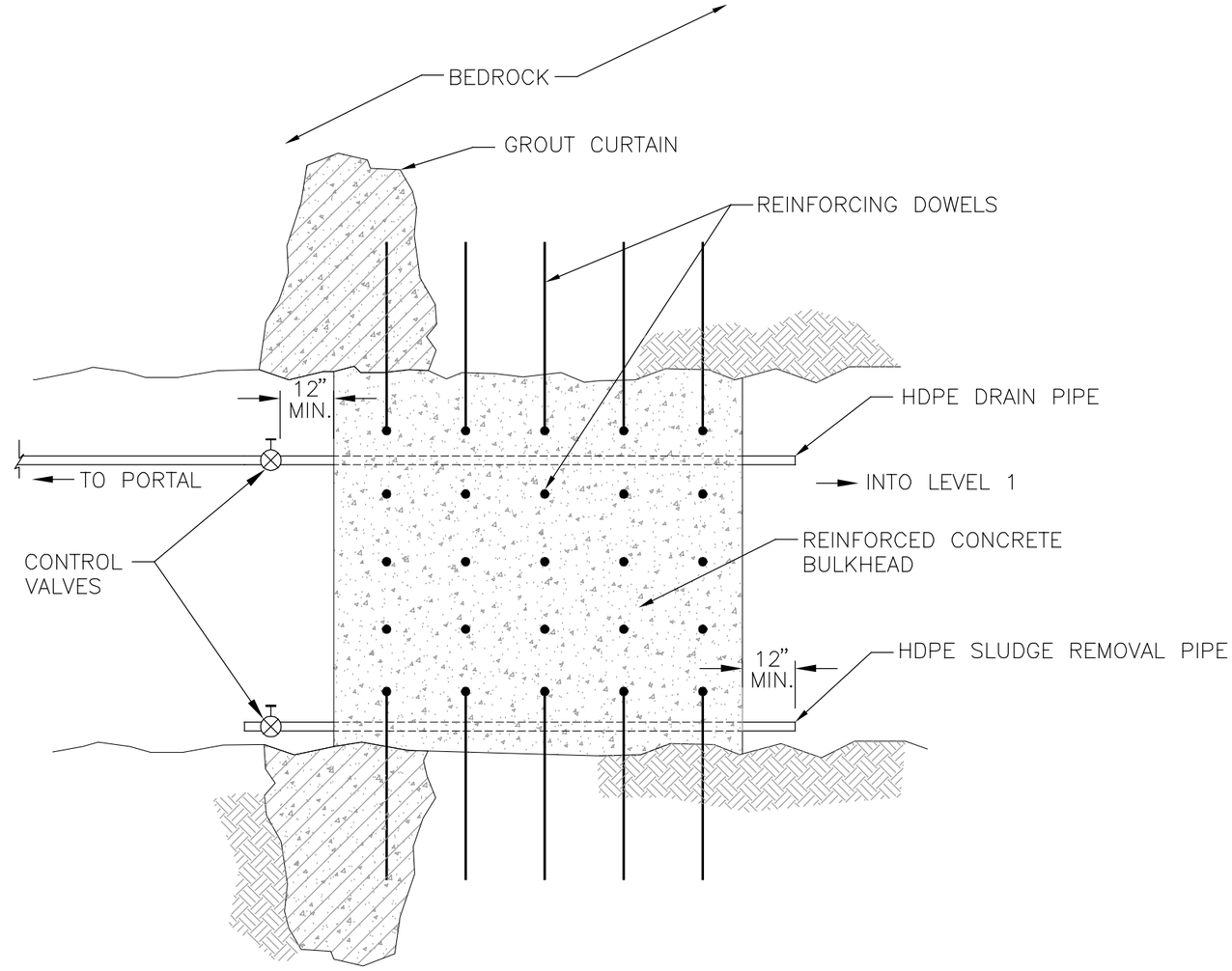

TYPICAL BULKHEAD FRONT VIEW (2 / 4-12)
NOT TO SCALE

NOTES:

1. BULKHEAD CONSTRUCTED WITH A MINIMUM OF 150 FEET OF BEDROCK COVER.
2. HDPE DRAIN PIPE EXTENDS OUTSIDE OF THE PORTAL (NOT SHOWN). A CONTROL VALVE TO BE INSTALLED INSIDE OF THE PORTAL FOR RELEASE OF RETAINED DRAINAGE.

NOT FOR CONSTRUCTION

URS OPERATING SERVICES

STANDARD MINE
GUNNISON COUNTY, CO
Alternative 5
Bulkhead in Level 1
Figure 4-12

December 2009 TDD No. 0608-07

MILLER, RANDY A, 12/10/2009 10:47 AM

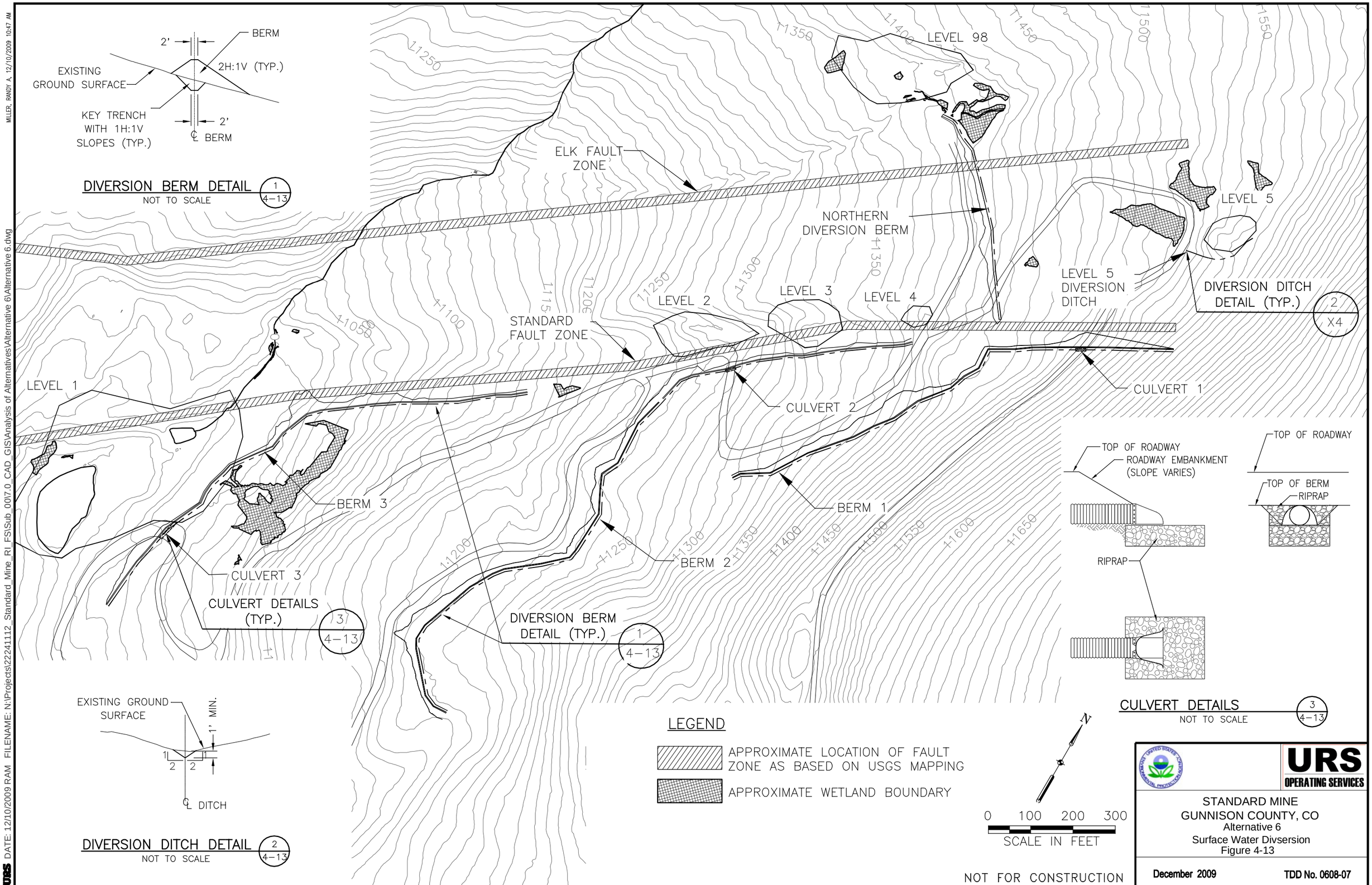

URS DATE: 12/10/2009 RAM FILENAME: N:\Projects\22241112_Standard_Mine_RI_FS\Sub_0017.0_CAD_GIS\Analysis of Alternatives\Alternative 6\Alternative 6.dwg

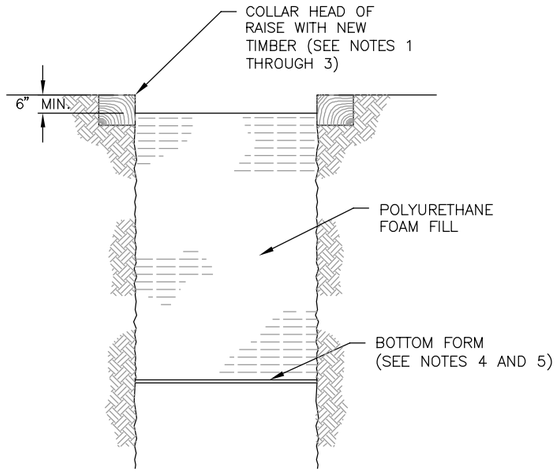

POLYURETHANE FOAM RAISE CLOSURE DETAIL (1 / 4-14)
NOT TO SCALE

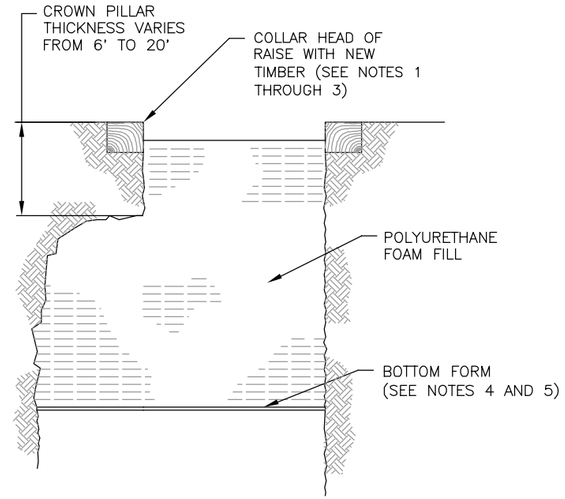

POLYURETHANE FOAM RAISE CLOSURE WITH THIN CROWN PILLAR DETAIL (2 / 4-14)
NOT TO SCALE

NOTES:

1. REMOVE ROCK AT HEAD OF RAISE UNTIL TIMBER CAN BE SET ON COMPETENT ROCK.
2. SET TIMBER COLLAR FLUSH WITH FLOOR.
3. LEAVE 6-INCH MINIMUM GAP BETWEEN TOP OF FOAM AND TOP OF TIMBER COLLAR.
4. BOTTOM FORM TO BE PLYWOOD OR OTHER SUITABLE MATERIAL STRONG ENOUGH TO SUPPORT WEIGHT OF FOAM.
5. GAPS BETWEEN BOTTOM FORM AND RAISE WALLS TO BE PLUGGED WITH PLASTIC TARP, CARPET, SMALL FOAM BLOCKS, ETC. TO MINIMIZE LEAKAGE OF FOAM BETWEEN GAPS BEFORE FOAM SETS.
6. FLOOR TO BE CLEARED OF DEBRIS, PIPE, RAIL, LOOSE TIMBER, ETC. BEFORE PLACING FLOWABLE FILL.
7. FLOWABLE FILL TO BE PLACED WITH MIN. DEPTH OF 12 INCHES FROM FACE TO PORTAL MAINTAINING POSITIVE DRAINAGE AND INCORPORATING A REVERSE CROWN TO FACILITATE DRAINAGE.

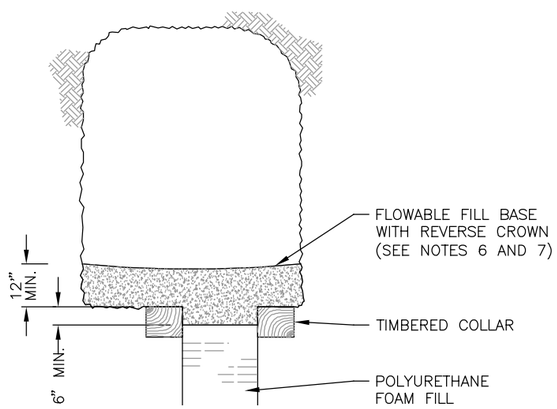

FLOWABLE FILL RAISE OPENING DETAIL (3 / 4-14)
NOT TO SCALE

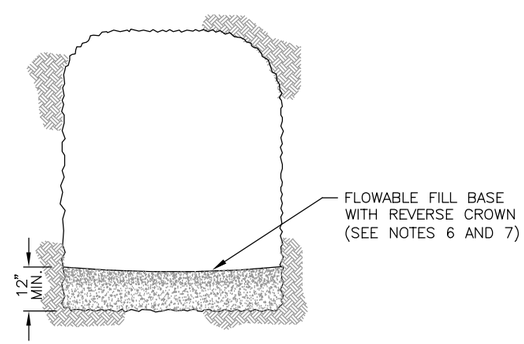

FLOWABLE FILL RAISE OPENING WITH THIN CROWN PILLAR DETAIL (4 / 4-14)
NOT TO SCALE

NOT FOR CONSTRUCTION

URS OPERATING SERVICES

STANDARD MINE
GUNNISON COUNTY, CO
Alternative 7
Flowable Fill and Foam in Level 3
Figure 4-14

December 2009 | TDD No. 0608-07

URS DATE: 12/10/2009 RAM FILENAME: N:\Projects\22241112_Standard_Mine_RI_FS\Sub_0017.0_CAD_GIS\Analysis of Alternatives\Alternative 7\Alternative 7.dwg
MILLER, RANDY A, 12/10/2009 10:50 AM

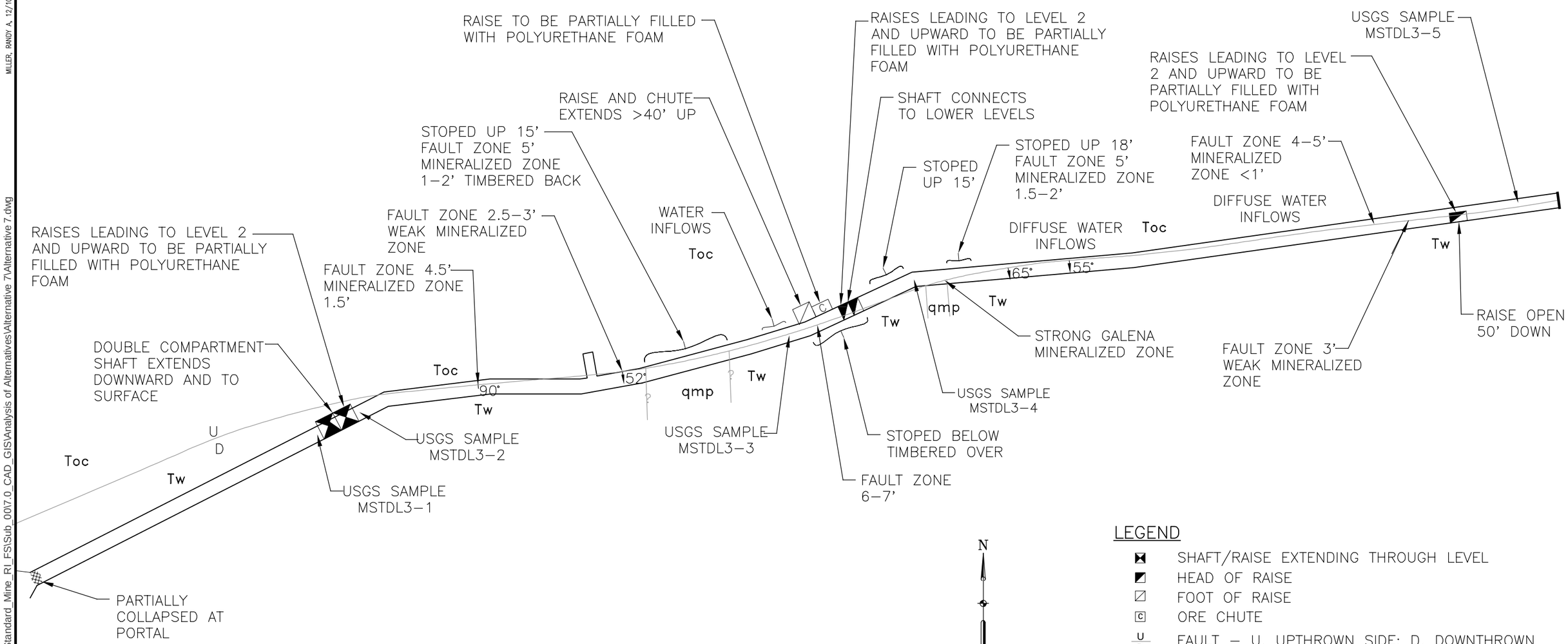

STANDARD MINE LEVEL 3

0 80 160 240

SCALE IN FEET

LEGEND

- SHAFT/RAISE EXTENDING THROUGH LEVEL
- HEAD OF RAISE
- FOOT OF RAISE
- ORE CHUTE
- U/D — FAULT – U, UPTHROWN SIDE; D, DOWNTHROWN SIDE
- 50° — FAULT DIP – DIRECTION AND MAGNITUDE
- qmp — QUARTZ MONZONITE PORPHYRY
- Toc — OHIO CREEK FORMATION
- Tw — WASATCH FORMATION

NOTES:

1. ADIT FEATURES MAPPED BY JEFF GRAVES AND STEVE RENNER, COLORADO DIVISION OF RECLAMATION, MINING AND SAFETY, AUGUST 2006.
2. THREE RAISES WERE IDENTIFIED LEADING TO LEVEL 2. THESE WILL BE PARTIALLY FILLED WITH POLYURETHANE FOAM PRIOR TO FLOWABLE FILL PLACEMENT, AS SHOWN ON FIGURE 4–17.
3. RAISES LEADING UP WILL ALSO BE PARTIALLY FILLED WITH POLYURETHANE FOAM.

NOT FOR CONSTRUCTION

URS OPERATING SERVICES

STANDARD MINE
GUNNISON COUNTY, CO
Alternative 7
Flowable Fill and Foam in Level 3
Figure 4-15

December 2009 TDD No. 0608-07

URS DATE: 12/10/2009 RAM FILENAME: N:\Projects\22241112_Standard_Mine_RI_FS\Sub_00\7.0_CAD_GIS\Analysis of Alternatives\Alternative 7\Alternative 7.dwg
MILLER, RANDY A, 12/10/2009 11:32 AM

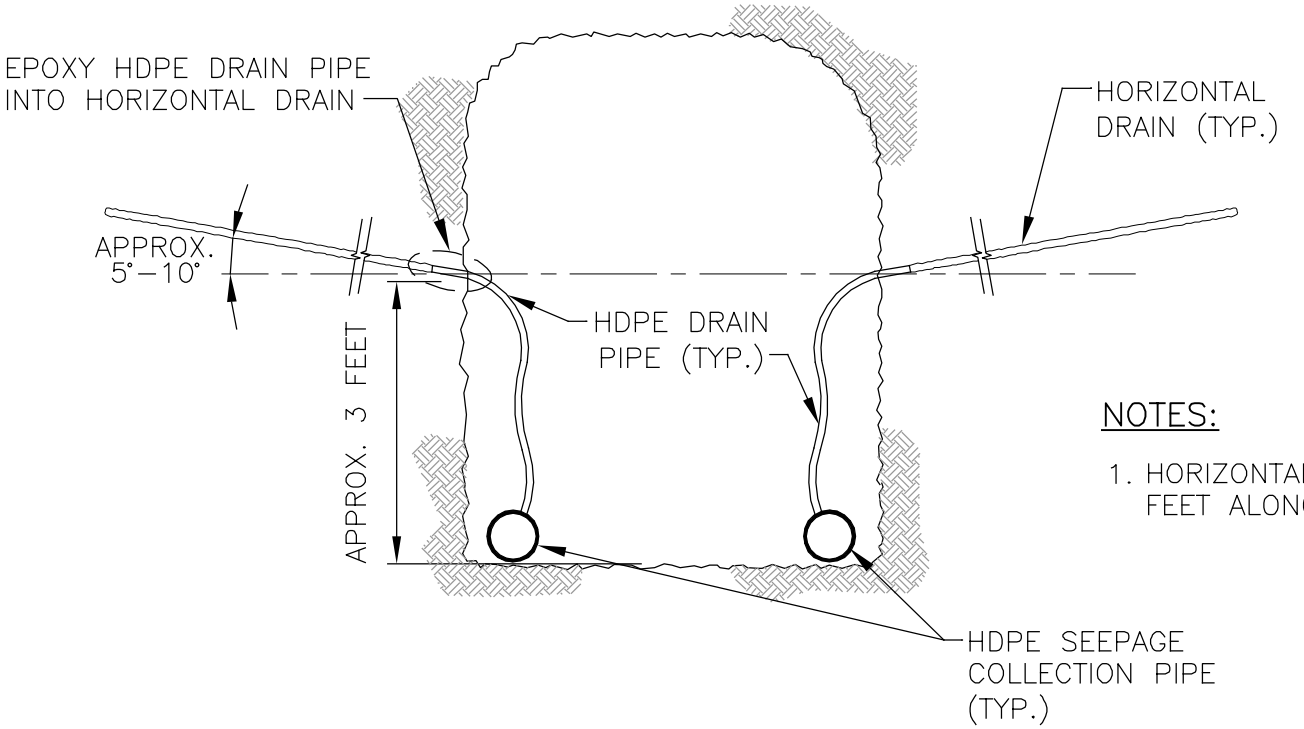

NOTES:

1. HORIZONTAL DRAINS TO BE SPACED EVERY 10 FEET ALONG THE LENGTH OF THE DRIFT.

HORIZONTAL DRAINS IN LEVEL 3
CROSS–SECTION – NO RAISE (TYP.)

NOT TO SCALE

NOT FOR CONSTRUCTION

URS OPERATING SERVICES

STANDARD MINE
GUNNISON COUNTY, CO
Alternative 8
Horizontal Drains in Level 3
Figure 4-16

December 2009 TDD No. 0608-07

N:\Projects\22241112_Standard_Mine_RI_FS\Sub_00\7.0_CAD_GIS\Analysis Of Alternatives\Alternative 8\Alternative 8.dwg

URS DATE: 12/18/2009 RAM FILENAME: N:\Projects\22241112_Standard_Mine_RI_FS\Sub_00\7.0_CAD_GIS\Analysis of Alternatives\Alternative 9\Alternative 9A.dwg
MCCRAY, JUDITH (JUDY) A., 12/18/2009 10:41

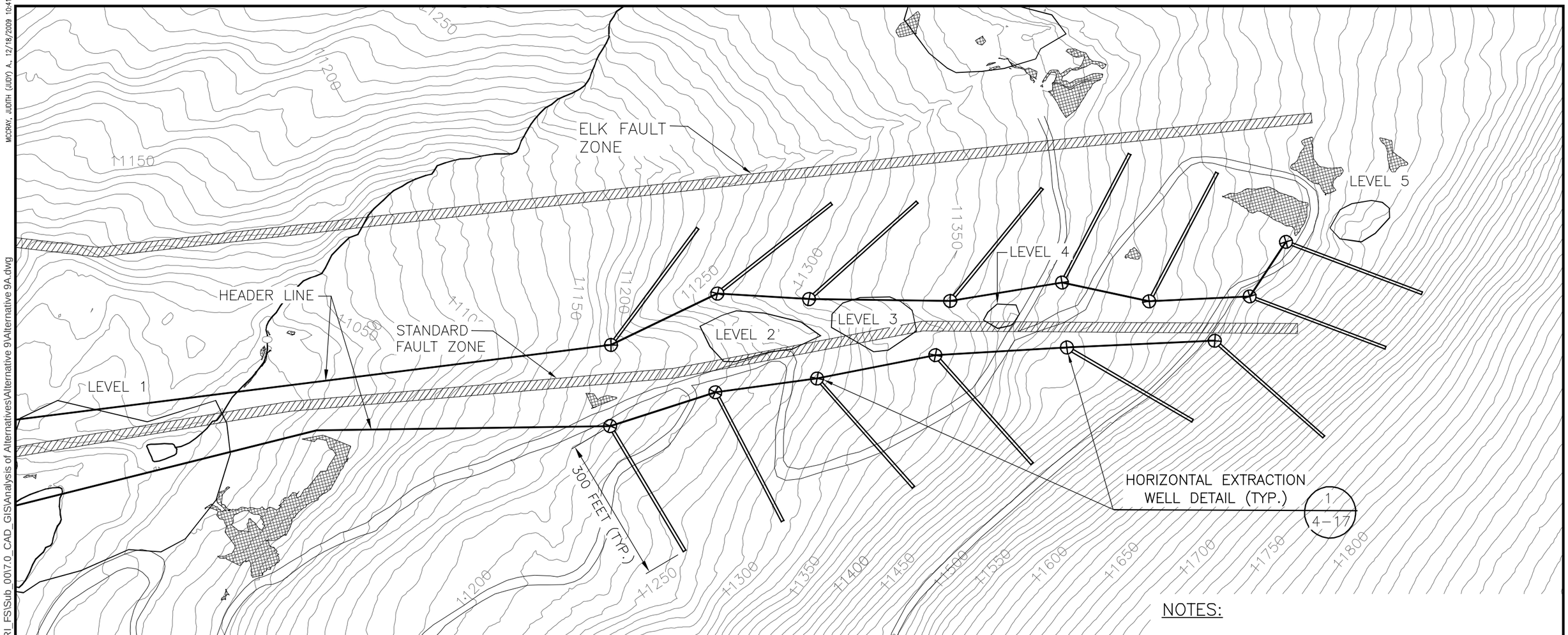

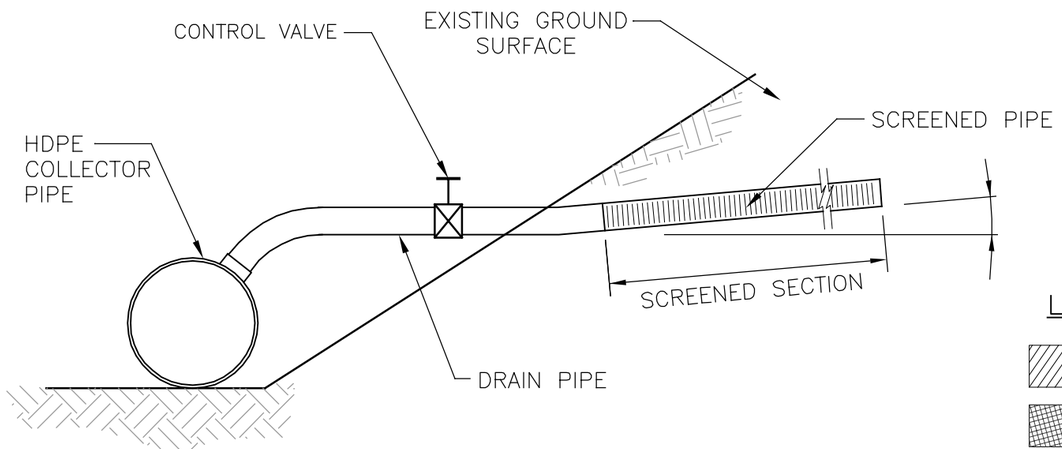

HORIZONTAL EXTRACTION WELL DETAIL (1 / 4-17)

NOT TO SCALE

NOTES:

1. HORIZONTAL EXTRACTION WELLS WERE LOCATED ON ABOUT 200-FOOT CENTERS. SPACING TO BE ADJUSTED DURING DESIGN PHASE TO OPTIMIZE DEWATERING EFFECTIVENESS.
2. EACH WELL GRAVITY DRAINS TO A HEADER PIPE SYSTEM THAT FOLLOWS THE STANDARD FAULT ZONE TO LEVEL 1.
3. HEADER PIPE TERMINATES AT ELK CREEK BELOW LEVEL 1.

LEGEND

- APPROXIMATE LOCATION OF FAULT ZONE AS BASED ON USGS MAPPING
- APPROXIMATE WETLAND BOUNDARY
- HORIZONTAL EXTRACTION WELL

N

0 100 200 300
SCALE IN FEET

NOT FOR CONSTRUCTION

URS OPERATING SERVICES

STANDARD MINE
GUNNISON COUNTY, CO
Alternative 9A
Horizontal Extraction Wells
Figure 4-17

December 2009 TDD No. 0608-07

URS DATE: 12/18/2009 RAM FILENAME: N:\Projects\22241112_Standard_Mine_RI_FSSub_001\7.0_CAD_GIS\Analysis of Alternatives\Alternative 9\Alternative 9B.dwg
MCCRAY, JUDITH (JUDY) A., 12/18/2009 10:39

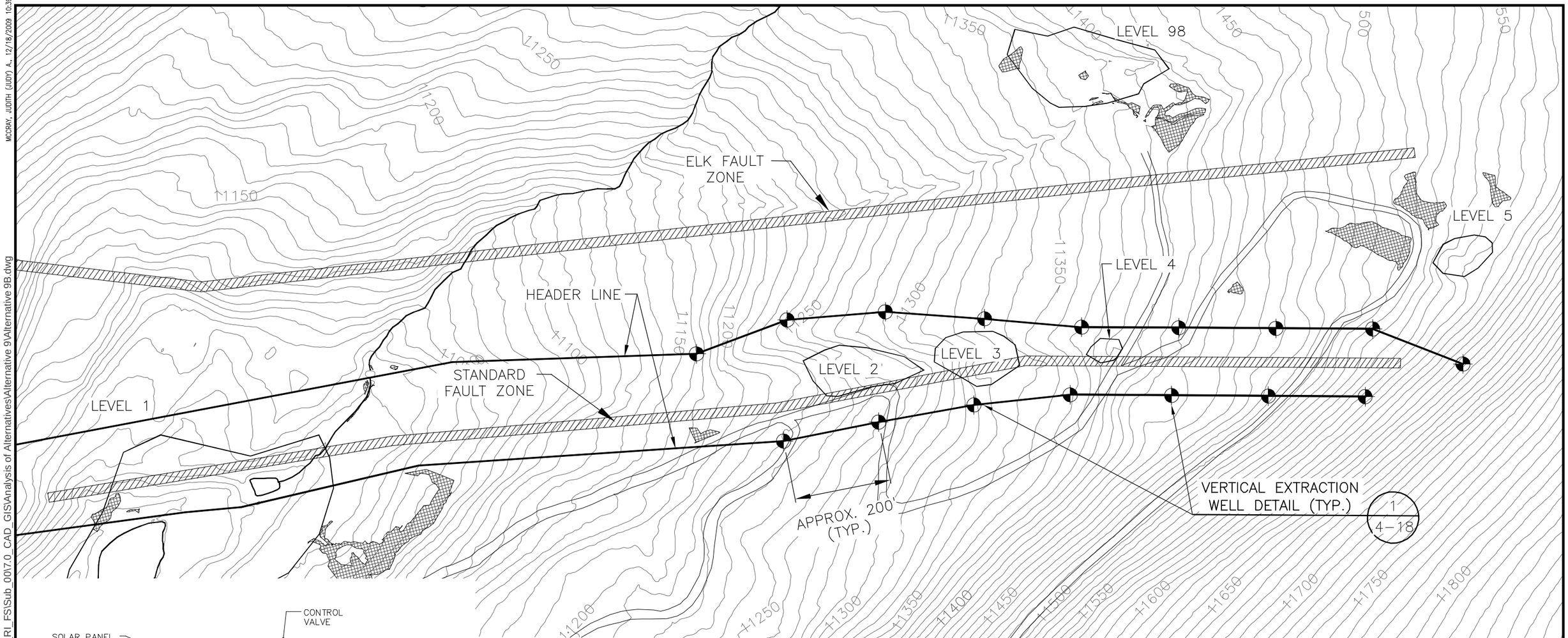

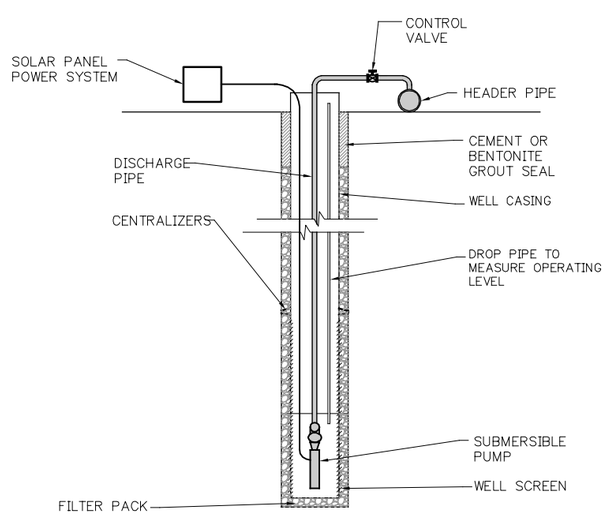

VERTICAL EXTRACTION WELL DETAIL

1
4-18

NOT TO SCALE

NOTES:

1. VERTICAL EXTRACTION WELLS WERE LOCATED ON APPROXIMATE 200-FOOT CENTERS. SPACING TO BE ADJUSTED DURING DESIGN PHASE TO OPTIMIZE DEWATERING EFFECTIVENESS.
2. EACH WELL HAS A SUBMERSIBLE PUMP THAT DELIVERS GROUNDWATER TO A GRAVITY DRAINED HEADER PIPE SYSTEM THAT FOLLOWS THE STANDARD FAULT ZONE TO LEVEL 1.
3. THE SUBMERSIBLE PUMPS HAVE A SOLAR PANEL POWER SYSTEM.
4. HEADER PIPE TERMINATES AT ELK CREEK BELOW LEVEL 1.

LEGEND

- APPROXIMATE LOCATION OF FAULT ZONE BASED ON USGS MAPPING
- APPROXIMATE WETLAND
- VERTICAL EXTRACTION WELL WITH SUBMERSIBLE PUMP

N

0 100 200 300

SCALE IN FEET

NOT FOR CONSTRUCTION

URS OPERATING SERVICES

STANDARD MINE
GUNNISON COUNTY, CO
Alternative 9B
Vertical Extraction Wells
Figure 4-18

December 2009 TDD No. 0608-07

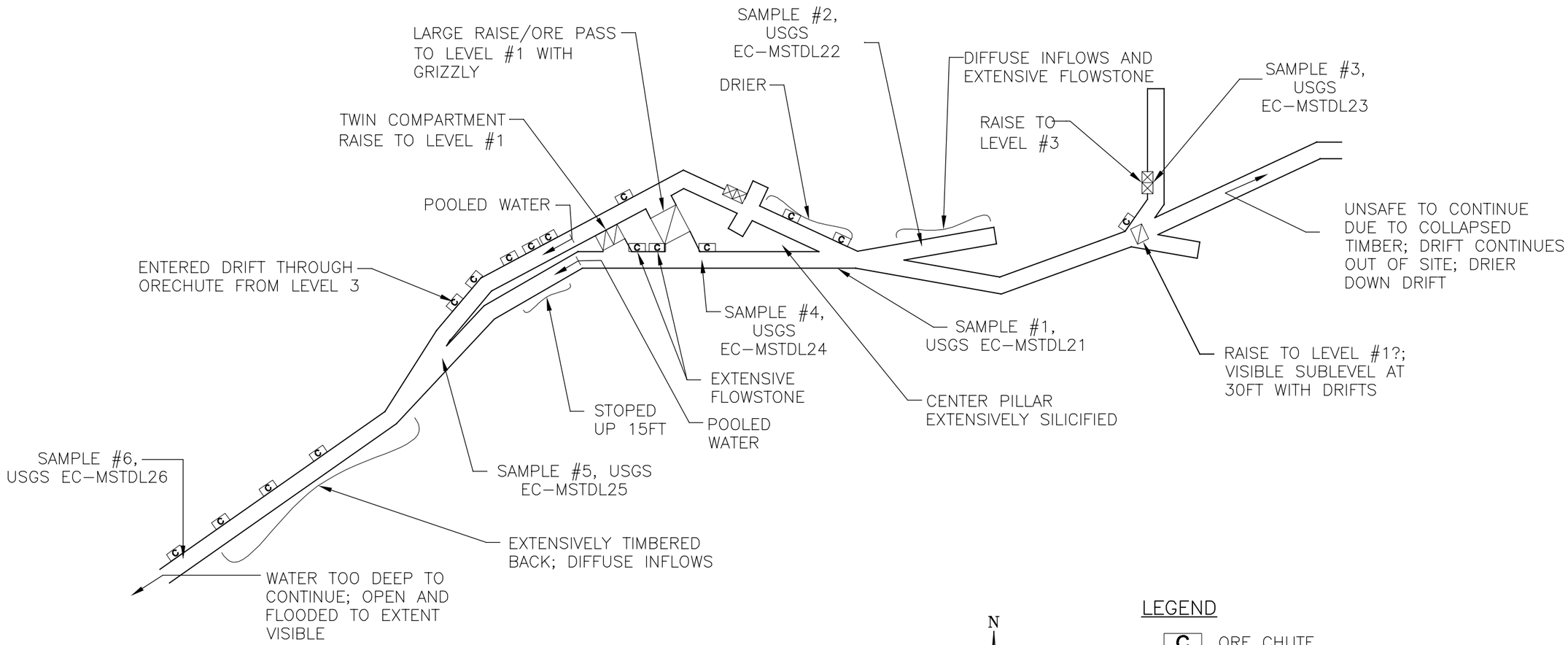

N

LEGEND

- C — ORE CHUTE
- FOOT OF RAISE
- HEAD OF RAISE

STANDARD MINE LEVEL 2

0 80 160 240

SCALE IN FEET

NOTES:

1. ADFIT FEATURES MAPPED BY JEFF GRAVES AND AL AMUNDSON, COLORADO DIVISION OF RECLAMATION, MINING AND SAFETY, JULY 2009.
2. PRESSURE GROUTING DETAILS ARE ILLUSTRATED ON FIGURE 4-20.
3. SIXTEEN ORE CHUTES WERE IDENTIFIED BY DRMS. EACH ORE CHUTE WAS ESTIMATED TO HAVE ASSOCCIATED STOPED AREAS, AS DEPICTED ON FIGURE 4-20. THESE STOPED AREAS WILL BE GROUTED TO REDUCE WATER INTERACTION.

NOT FOR CONSTRUCTION

URS OPERATING SERVICES

STANDARD MINE
GUNNISON COUNTY, CO
Alternative 10
Contamination Source Control at Level 2
Figure 4-19

December 2009 TDD No. 0608-07

URS DATE: 12/10/2009 RAM FILENAME: N:\Projects\22241112_Standard_Mine_RI_FS\Sub_00\7.0_CAD_GIS\Analysis of Alternatives\Alternative 10\Level 2 Plan View.dwg MILLER, RANDY A, 12/10/2009 1:12 PM

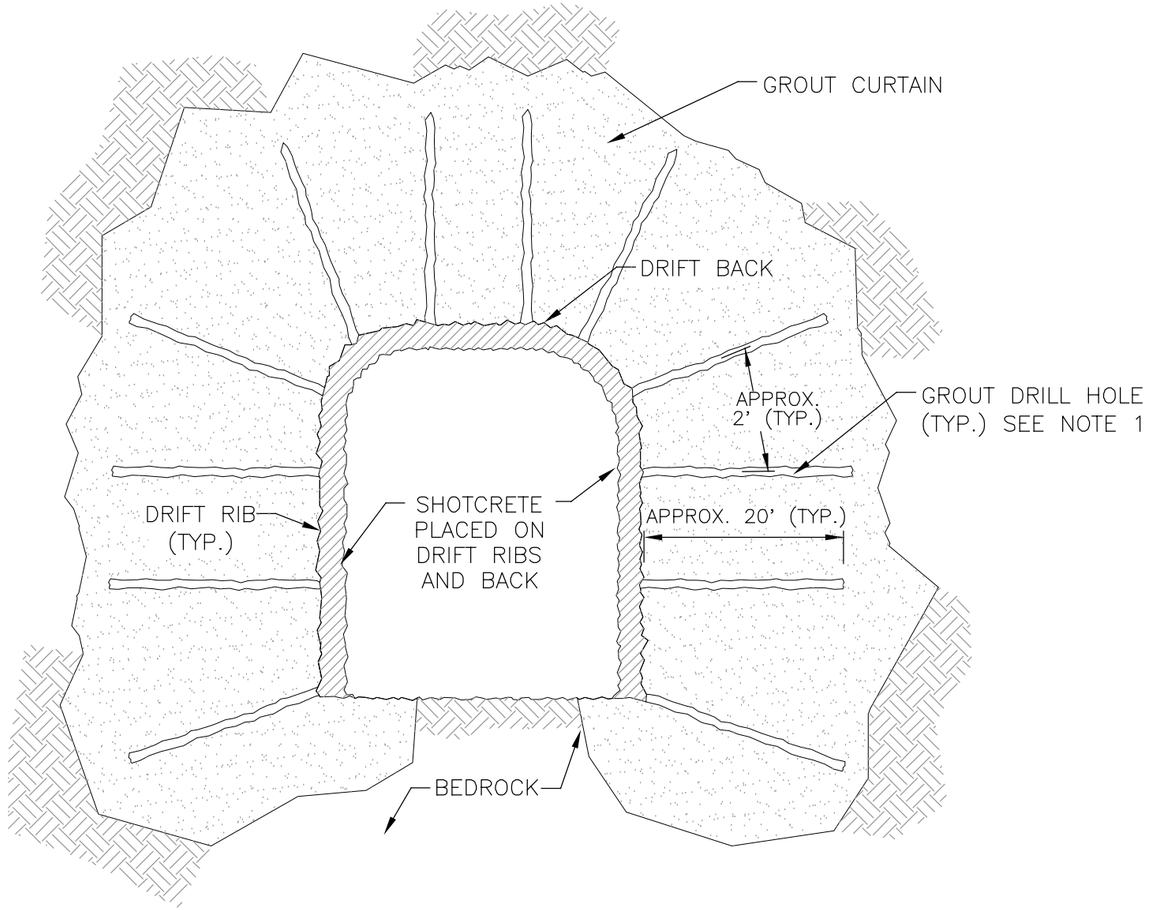

PRESSURE GROUTING DETAIL 1/4-20

NOT TO SCALE

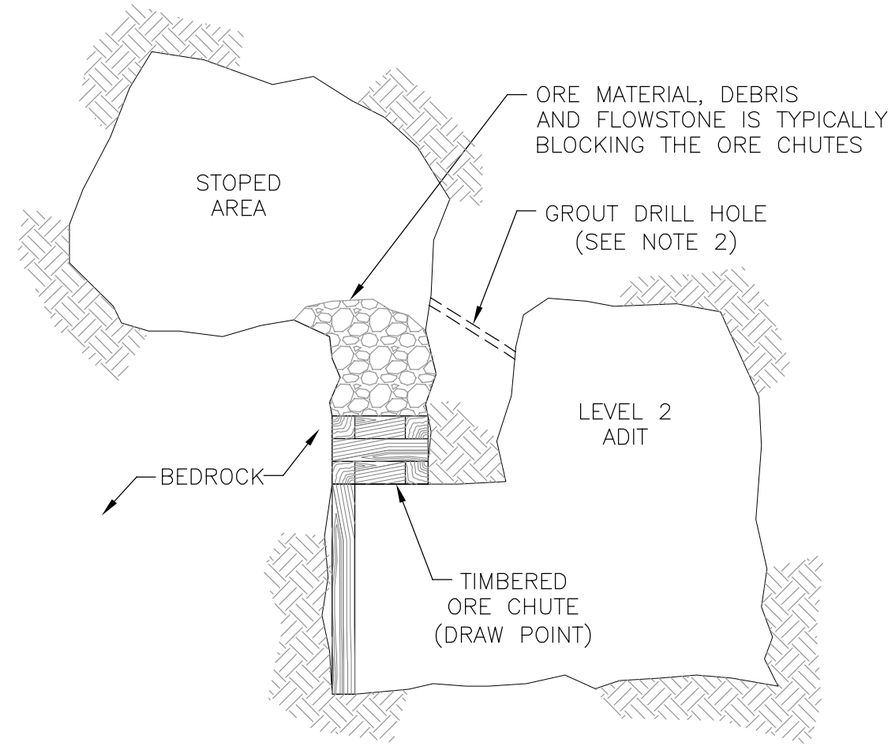

STOPED AREA DETAIL 2/4-20

NOT TO SCALE

NOTES:

1. DRILL HOLES FOR PRESSURE GROUTING SPACED ABOUT EVERY 2 FEET ALONG THE DRIFT RIBS AND BACK. THIS IS REPEATED EVERY 10 FEET ALONG ABOUT 20 PERCENT OF THE DRIFT TOTAL LENGTH. THE REMAINING LENGTH OF THE ADIT BE EVALUATED AFTER THE LEVEL 2 INVESTIGATION HAS BEEN CONDUCTED.

2. GROUT PUMPED INTO THE STOPED AREAS ABOVE ORE CHUTES VIA DRILL HOLES EXTENDED THROUGH THE DRIFT RIB. FORM WORK REQUIRED AT THE ORE CHUTE TO CONFINE GROUT WITHIN THE STOPED DRAW AREAS.

NOT FOR CONSTRUCTION

URS OPERATING SERVICES

STANDARD MINE
GUNNISON COUNTY, CO
Alternative 10
Contamination Source Control at Level 2
Figure 4-20

December 2009 | TDD No. 0608-07

URS DATE: 12/10/2009 RAM FILENAME: N:\Projects\22241112_Standard_Mine_RI_FS\Sub_00\7.0_CAD_GIS\Analysis of Alternatives\Alternative 10\Alt. 10_Level 2 Adit Details.dwg MILLER, RANDY A, 12/10/2009 1:04 PM

5.0 DETAILED ANALYSIS OF ALTERNATIVES

The detailed analysis of alternatives provides additional information to build on the development of alternatives presented in Section 4. Each of the alternatives was assessed against the required evaluation criteria and analyzed in terms of how well each one meets those criteria. The resulting analysis provides the information necessary to compare the alternatives against each other and to assist decision makers in selecting an appropriate remedy.

As described in Section 4, EPA, CDPHE, and USFS have indicated that a phased approach is preferred for implementing alternatives at the Standard Mine site. The phased approach would allow for assessment of the effectiveness of each alternative prior to performing additional actions. The individual alternatives are not necessarily intended to serve as final remedies for addressing mine discharge, but as potential elements that will be combined as a final remedy. The alternatives presented here should be viewed as components of a toolbox from which the final remedial actions will be built.

5.1 EVALUATION CRITERIA

The evaluation criteria were developed by EPA to provide a basis to identify the advantages and disadvantages of remedial action alternatives and to compare the relative performance of the different alternatives (EPA 1988). This evaluation is intended to provide sufficient information to assess the alternatives and to select the most appropriate alternative(s) for implementation during remedial actions. The nine evaluation criteria are:

Threshold Criteria
(1) Overall protection of human health and the environment
(2) Compliance with ARARs

Balancing Criteria
(3) Long-term effectiveness and permanence
(4) Reduction of toxicity, mobility, and volume through treatment
(5) Short-term effectiveness
(6) Implementability
(7) Cost

Modifying Criteria
(8) State acceptance
(9) Community acceptance

The criteria are categorized into three groups: threshold criteria, balancing criteria, and modifying criteria. Typically, the threshold criteria must be met by a particular alternative for it to be eligible for selection as a remedial action. The five balancing criteria assess the advantages and disadvantages of the alternatives. A low rating on one balancing criterion can be compensated by a high rating on another. The recommended alternative(s) will be evaluated by the modifying criteria after the FS undergoes public comment and are used to modify the recommended alternative(s) as appropriate. Modifying criteria are not included in the comparative analysis of alternatives in the FS. The nine evaluation criteria are described in detail below.

5.1.1 Threshold Criteria

Typically, an alternative must meet the two threshold criteria described below to be eligible for selection; however, with the phased approach being taken for this site, not meeting the threshold criteria did not disqualify an alternative for eligibility to be included as part of the final remedy.

Overall Protection of Human Health and the Environment. This criterion provides a final check to assess whether the alternative provides adequate protection of human health and the environment. Assessment of overall protection of human health and the environment draws on the assessments of other evaluation criteria, especially long-term effectiveness and permanence, short-term effectiveness, and compliance with ARARs. The evaluation focuses on whether the alternative achieves adequate protection and describes how site risks posed through each pathway are eliminated, reduced, or controlled through treatment, engineering controls, or institutional controls. Whether the alternative poses any unacceptable short-term or cross-media impacts is considered.

Compliance with ARARs. This criterion is used to determine whether the alternative will meet federal and state ARARs. Compliance with ARARs and the means by which the alternative meets the requirements are assessed. When the ARAR is not met, the basis for justifying one of the six waivers allowed under CERCLA is discussed.

The evaluation of compliance with ARARs presented in the following sections is grouped by category: groundwater quality, surface water quality, protection of wetlands and floodplains, soil and hazardous waste, air (odors and dust), reclamation, fish and wildlife, preservation of historic and natural areas, and noise control. Environmental covenants are the primary component of Alternative 2 and would likely be implemented in conjunction with any of the subsequent alternatives; therefore, they are not discussed in the ARARs analysis of the other alternatives. Items of cultural, historic, or archeological importance have not been identified at the site. If cultural, historic, or archeological features are encountered during construction of any alternative, an assessment will be performed and the resource protection agencies will be notified and consulted for determination of appropriate actions.

Due to the complexity of the bedrock fracture system and hydrogeology, the evaluation of the ability to meet water quality standards in Elk Creek by implementing the alternatives is qualitative rather than quantitative for most of the alternatives. A quantitative evaluation of the ability to meet WQS in Elk Creek was performed for the water treatment alternatives based on available data.

5.1.2 Balancing Criteria

The five criteria listed below represent the detailed evaluation for each alternative. The analysis was performed to the level of detail necessary to understand the significant aspects of each alternative and to identify the uncertainties associated with the evaluation.

Long-Term Effectiveness and Permanence. Alternatives are evaluated in terms of the risk remaining at the site after response objectives have been met. The primary focus of the evaluation is the extent and effectiveness of the controls that may be required to manage the risk posed by treatment residuals and/or untreated wastes. Factors considered include the following.

(a) The magnitude of residual risk from untreated waste or treatment byproducts remaining at the conclusion of the remedial activities. The characteristics of the residuals are considered to the degree that they remain hazardous, taking into account their volume, toxicity, mobility, and propensity to bioaccumulate.

(b) The adequacy, reliability, and suitability of controls, if any, that are used to manage treatment residuals or untreated waste. This may include an assessment of containment systems and institutional controls to determine if they are sufficient to ensure that any exposure to human and environmental receptors is within protective levels. This factor also addresses the long-term reliability of

management controls for providing continued protection from residuals. It includes assessment of the potential need to replace technical components of the alternative and the risks posed should the remedial action need replacement.

Reduction of Toxicity, Mobility, or Volume through Treatment. The alternatives are assessed to determine the degree to which they employ recycling or treatment that reduces toxicity, mobility, or volume of contaminated materials. Factors that are considered include the following.

(a) The treatment or recycling processes the alternatives employ and the materials they will treat.
(b) The amount of hazardous materials that will be destroyed, treated, or recycled and how the principal threat will be addressed.
(c) The degree of expected reduction in toxicity, mobility, or volume measured as a percentage of reduction or order of magnitude.
(d) The degree to which the treatment is irreversible.
(e) The type and quality of residuals that will remain following treatment.
(f) The degree to which treatment reduces the inherent hazards posed by principal threats at the site.

Short-Term Effectiveness. The short-term impacts of alternatives are assessed using the following considerations.

(a) Short-term risks that might be posed to the community during implementation of an alternative.
(b) Potential impacts on workers during remedial action and the effectiveness and reliability of protective measures.
(c) Potential environmental effects of the remedial action and the effectiveness and reliability of mitigative measures during implementation.
(d) Time until protection is achieved.

Implementability. The technical and administrative feasibility of implementing an alternative and the availability of services and materials required during implementation. The following factors are considered.

(a) Technical feasibility, including the technical difficulties and the unknowns associated with the construction and operation of a technology, the reliability of the technology, the ease of undertaking additional remedial actions, and the ability to monitor the effectiveness of the remedy.
(b) Administrative feasibility, including the need to coordinate with other offices and agencies and the ability and time required to obtain any necessary approvals and permits from other agencies.
(c) Availability of services and materials, including the availability of adequate off-site treatment; storage capacity, and disposal capacity and services; the availability of necessary equipment and specialists, and provisions to ensure any necessary additional resources; the availability of services and materials; and the availability of prospective technologies.

Cost. The types of costs that are assessed include the following:

(a) Capital (construction) costs, including both contingency and professional/technical services. Construction, equipment, land and site development, buildings and services, relocation expenses for affected residents, and disposal costs are included in capital costs.

(b) Annual O&M costs and periodic costs, including operating labor, maintenance materials and labor, auxiliary materials and energy, disposal of residues, purchased services, administrative costs, insurance, taxes, and licensing, rehabilitation, site reviews, and contingency funds.

(c) Present value analysis is performed to evaluate and compare costs that may occur over different time periods.

5.1.3 Modifying Criteria

The two modifying criteria are state and community acceptance. Evaluation of the alternatives under the modifying criteria is not used in the comparative analysis of alternatives described in this FS; evaluation of these criteria will be performed after the FS is completed.

State Acceptance. State concerns regarding the technical and administrative issues with each alternative will be evaluated as part of the remedy selection process.

Community Acceptance. Community concerns will be evaluated as part of the public comment period during the remedy selection process.

5.1.4 Development of Alternative Costs

Cost estimates were developed for the purpose of comparing remedial alternatives during the remedy selection process, not for establishing project budgets or negotiating Superfund enforcement settlements. At this stage, the alternative designs are conceptual rather than detailed, and assumptions were made about the detailed design in order to prepare the cost estimate. The expected level of accuracy of the cost estimates is "order-of-magnitude" and ranges from minus 30 percent to plus 50 percent. Detailed designs will be completed prior to remedial action and will be used to refine the cost estimate. Total alternative costs for the final remedy include construction costs, operation and maintenance costs, and periodic costs.

Capital costs are expenditures that are required to design and construct the remedial action. Construction costs were estimated based on the conceptual design. For most alternatives, a contingency of 30 percent was added to cover possible changes that may occur during Remedial Design and additional costs that may be incurred during construction. The 30 percent contingency was applied to the direct construction estimates associated with each alternative. A lesser contingency was included for Alternative 3 because the design and costing used information gathered during the pilot study and were more detailed than for the other alternatives. Professional and technical costs were estimated by applying a percentage to the total of construction plus contingency. The percentages used in this FS were based on EPA guidance (EPA 2000b). The cost evaluation assumes that all capital costs occur in year zero.

Operation and maintenance (O&M) costs are post-construction costs necessary to ensure or verify the continued effectiveness of a remedial action. O&M costs were estimated on an annual basis. A contingency of 30 percent was applied to the total annual O&M costs (15 percent design or scope and 15 percent construction or bid). Professional/technical cost percentages of 8 percent for project management and 15 percent for technical support were applied to the total annual O&M costs (plus contingency) for each alternative. The actual percentages for project management and technical support on O&M items may be higher if the O&M items are split among several contractors.

Periodic costs are those costs that occur only once every few years or expenditures that occur only once during the entire O&M period or period of analysis. Periodic costs include the future costs of replacing remedy components (e.g., new water treatment plant or pipeline replacement), site reports, and updates to institutional controls.

Because the alternatives have varying cash expenditures occurring over differing periods, a common cost comparison is required. Present value analysis was used to develop a single cost figure for each alternative to allow comparisons of the cost of different remedial alternatives on an equivalent basis. The present value is the amount of funding that would need to be set aside at the onset of the project (the "base year") to assure that funds would be available in the future as they are needed, assuming certain economic conditions. The costs were evaluated over a 30-year time frame. For cost estimating purposes, the capital costs were assumed to occur in the base year zero, while the O&M and periodic costs would occur during years 1 to 30. The discount rate is used to calculate the present value of costs that occur in years after construction. A discount rate of 7 percent was used in accordance with EPA guidance (EPA 2000b). Remedial costs are highly sensitive to the selection of the discount rate.

5.2 INDIVIDUAL ANALYSIS OF ALTERNATIVES

The following sections provide an evaluation of the individual alternatives against the seven criteria.

5.2.1 Alternative 1 – No Action

No action would be taken to address site conditions. Annual monitoring may be conducted to evaluate the effects of previous site actions until the point where site conditions are determined to be stable.

The benefits of Alternative 1 include the following.

- No additional action is required.
- Minor additional expenses would be incurred.

Potentially significant issues associated with Alternative 1 include the following.

- Water discharges from the mine workings would continue without reduction in volume or contaminant concentrations.
- Transport of metals from the Level 98 and Level 5 waste rock piles into water that contacts the piles and the subsequent loading of the contaminants into Elk Creek would continue.

Overall Protection of Human Health and Environment

Protection of on-site or off-site ecological receptors would not be accomplished. Conditions in Elk Creek may gradually improve in response to the Removal Actions conducted at the site from 2005 through 2008; however, due to continued releases of contaminated waters to Elk Creek, it is expected that WQS would not be met in Elk Creek. There would be no reduction in the production of acid rock drainage and subsequent transport of contaminants to off-site surface water and groundwater. The RAOs would not be met.

Compliance with ARARs

Surface Water - It is expected that water quality standards for specific metal contaminants would not be met in Elk Creek or in segments of Coal Creek.

Environmental covenants that are required when contaminants are left in place would not be instituted.

Other ARARs would not be triggered because no action would be taken.

Long-term Effectiveness and Permanence

This alternative would not be effective in meeting any of the RAOs or protecting human health or the environment in the long term.

Reduction of Toxicity, Mobility, and Volume through Treatment

No actions would be taken to reduce the toxicity, mobility or volume of site contaminants.

Short-term Effectiveness

Because no action would be taken, this alternative would not be effective in meeting the RAOs in the short term.

Implementability

This alternative is easily implemented because no further action is required.

Cost

Costs would be minimal and depend on the degree to which EPA decides to monitor site conditions.

5.2.2 Alternative 2 – Institutional Controls

Institutional controls would be implemented to restrict site use. Environmental covenants would be instituted for private property to limit groundwater use and prevent disturbances to any remedial action that occurs at the site. Land use restrictions would be placed on public property.

Fencing and signs could be installed to discourage or restrict site access to prevent exposure to site hazards.

The benefits of Alternative 2 include the following.

- No additional construction beyond fencing and signage is required.
- Little additional expense would be incurred.

Potentially significant issues associated with Alternative 1 include the following.

- Water discharges from the mine workings would continue without reduction in volume or contaminant concentrations.

- Transport of metals from the Level 98 and Level 5 waste rock piles into water that contacts the piles and the subsequent loading of the contaminants into Elk Creek would continue.

Overall Protection of Human Health and Environment

Protection would be achieved by restricting site access. Protection of off-site receptors would not be achieved because contaminant transport to off-site locations would not be reduced. Conditions in Elk Creek may gradually improve in response to the Removal Actions conducted at the site from 2005 through 2008; however, due to continued releases of contaminated water to Elk Creek, it is expected that WQS would not be met in Elk Creek.

Compliance with ARARs

Surface Water Quality - It is expected that water quality standards for specific metal contaminants would not be met in Elk Creek.

Environmental Covenants – Environmental covenants and land use restrictions would be established to reduce risks to human and environmental receptors.

Additional ARARs would not be triggered because no remedial action would be taken.

Long-Term Effectiveness and Permanence

This alternative would not be effective in meeting the RAOs or protecting human health or the environment in the long term. There would be no reduction in the production of acid rock drainage and subsequent transport of contaminants to off-site surface water and groundwater. Adit discharges containing elevated concentrations of site contaminants would continue to flow into Elk Creek and cause impacts to aquatic organisms.

Reduction of Toxicity, Mobility, and Volume through Treatment

No actions would be taken to reduce the toxicity, mobility or volume of contaminants present at the site.

Short-Term Effectiveness

Because no action would be taken to reduce the flow of contaminants from the site, this alternative would not be effective in meeting the RAOs in the short term.

Implementability

There may be limited difficulty in establishing environmental covenants with private property owners.

Cost

Costs would be minimal and depend on the institutional controls and ongoing monitoring activities that are implemented.

5.2.3 Alternative 3 – Passive Water Treatment System

Alternative 3 includes passive treatment of the Level 1 adit discharge. Five potential systems were evaluated.

Alternative 3A	20 gpm five-stage PTS
Alternative 3B	50 gpm four-stage PTS
Alternative 3C	160 gpm four-stage PTS
Alternative 3D	125 gpm three-stage PTS
Alternative 3E	20 gpm four-stage PTS on non-USFS Land

The benefits of Alternative 3 include the following.

- Water treatment would reduce the loading of metals from the Level 1 adit discharge to Elk Creek.
- Water treatment would provide consistent effluent concentrations as long as the design flow capacity is greater than the adit discharge flow.
- Discharge of the treated water would likely allow surface water ARARs to be met at downstream Elk Creek locations. The ability to meet standards will depend on where standards must be met and the continued contribution of metals from non-anthropogenic sources in the Elk Creek basin.

The most significant issue with a PTS is that there is not a large amount of long-term performance history for similar systems. Other potential issues associated with Alternative 3 include the following.

- System performance could decrease over time. Decreased biological activity could occur if the BCR media degrade and do not provide sufficient nutrients (i.e., nitrogen, phosphorus) to maintain the sulfate reduction rates observed in the pilot system. The pilot study has produced consistent treatment results.
- System performance could decrease due to extreme cold weather. The pilot-scale system has produced consistent metal removal rates through the cold winter months using a design with a wood chip cover and a geomembrane cap.
- The ability to handle extreme fluctuations in the adit discharge flow rate is unknown. Fluctuations in flow, including periods with no flow, have occurred without decreasing the pilot PTS performance.
- System performance could be affected if the BCR becomes plugged as may occur if suspended solids, iron, or aluminum concentrations increase significantly or are not effectively removed in the settling basin before the water enters the BCR.
- The system requires long-term operation and maintenance, which can be costly and difficult at a remote, high-elevation site.
- Adit discharge would bypass the system when the adit flow is greater than the PTS design flow rate.
- All five PTS systems require road realignment across private property. Use of a PTS system will require obtaining perpetual easements for access from the landowners, coordination with natural resource trustees to minimize ecological disturbance, and a road design that minimizes O&M requirements.
- A detailed design analysis of the methods for drying and disposal of spent BCR media may be necessary to determine the best spent substrate handling and disposal methods.

The following assessment compares the PTS alternative against the criteria and also compares the five sub-alternatives against each other based on current site conditions.

The evaluation was based on the evaluation provided by Golder Associates (Golder 2009c). Evaluation of the protectiveness and effectiveness of the alternative may change if other alternatives are implemented that reduce or modulate flow from the Level 1 adit or change the chemical composition of the adit discharge. If this alternative is implemented subsequent to implementation of other alternatives, the evaluation should be revised using updated flow and water quality data.

Overall Protection of Human Health and the Environment

A PTS would protect human health and the environment by reducing the transport of contaminants from the site to Elk Creek to the extent necessary to maintain aquatic life in Elk Creek at some point downstream from the discharge point.

Treatability testing at the Standard Mine site and performance of the technology at other sites indicate that a PTS would likely meet the following performance specifications:

- Alternatives 3A, 3B, 3C, and 3E would achieve cadmium, copper, lead, and zinc removal rates greater than 98%, and
- Alternative 3D would achieve cadmium, copper, and lead removal rates greater than 99% and a zinc removal rate greater than 98%.

The system would bypass untreated adit discharge whenever the adit flow rate exceeds the system design flow rate. Adit mine water that may need to be diverted directly to Elk Creek during high spring flow conditions is diluted by the high Elk Creek flows during the spring.

A PTS would only protect against risks posed by the Level 1 adit discharge. It would not address groundwater and soil RAOs.

Compliance with ARARs

Groundwater Quality – This alternative is not expected to improve groundwater quality.

Surface Water Quality - The most restrictive ARAR regarding a PTS is the Colorado Water Quality Regulations that establish WQS for Elk Creek and Coal Creek (Table 2-2). The evaluation of each alternative against WQS considered the predicted effluent concentrations based on the results from the pilot mixing study (Golder 2009b).

Predicted Dissolved Metals Concentrations and Percent Removals

Target Analyte	Alternatives 3A, 3B, 3C, and 3E		Alternative 3D	
	Effluent Concentration (µg/L)	Percent Removal	Effluent Concentration (µg/L)	Percent Removal
Cadmium	0.55	99.7%	< 0.13	99.93%
Copper	< 2.6	99.2%	< 2.6	99.24%
Lead	3	98.5%	1.9	99.08%
Zinc	**500**	98.2%	**330**	98.80%

< Concentration was less than the laboratory detection limit.

Shaded cells with bold text indicate concentrations are greater than the acute and chronic standards at hardness 65 mg/L. Shaded cells without bold text indicate concentrations are greater than the chronic standard and less than the acute standard at hardness 65 mg/L.

If the WQS calculated at hardness 65 mg/L must be met in the PTS effluent with no dilution from Elk Creek, none of the alternatives meet ARARs for all contaminants. The effluent cadmium concentrations are expected to be less than the acute standard for all alternatives and less than both the acute and chronic standards for Alternative 3D. The effluent copper concentrations are expected to be less than the acute and chronic standards. The effluent lead concentrations are expected to be greater than the chronic standard and less than the acute standard. The effluent zinc concentrations are expected to be greater than both the acute and chronic standards for all PTS alternatives. The results of a comparison to WQS calculated at hardness of 100 mg/L shows similar results with the exception that the chronic lead WQS would be met in the PTS effluent using Alternative 3D.

Manganese is not removed in the BCR. Although some manganese removal would likely occur in PTS alternatives with an aerobic wetland and aeration channel, the effluent concentration would likely still exceed the WQS. The manganese concentrations at Elk-10 have been lower than both the acute and chronic WQS during the spring and concentrations at Elk-08 have been lower than both the acute and chronic WQS during all times of year; therefore, the ability to meet the manganese WQS using a PTS is not expected to be a cause for concern.

The effluent DO concentration is expected to be less than 6 mg/L for systems without an aerobic wetland (Alternatives 2, 3, 4, and 5). The effluent DO concentration for a PTS that includes a wetland would be expected to meet the standard within several years of startup. DO levels could be increased by installation of waterfall-like structures in an aeration channel. If low DO levels are discharged to Elk Creek, the high-gradient nature and assimilative capacity of the creek would likely minimize the length of Elk Creek that is affected.

The expected *E. coli* concentrations would also potentially exceed the ARAR during the first year of operation. High *E. coli* concentrations could be mitigated by minimizing or eliminating the amount of manure in the BCR media.

The effluent pH values for all alternatives may be less than the WQS range of 6.5 to 9 during a limited portion of the year. With the polishing treatment afforded by the aerobic wetland, Alternative 3A is expected to comply with the pH standard more consistently than the other alternatives.

Evaluation of whether a PTS would meet the PRGs and ARARs for surface water were made by predicting expected compliance at Elk-08. Elk-08 concentrations were predicted based on average Elk Creek flow and water quality data collected during the 2005 through 2009 EPA water monitoring events, pilot-study PTS performance data, and average metal attenuation rates in Elk Creek. The June EPA data were used to predict Elk-08 concentrations under high-flow conditions and the September data were used to predict concentrations under low-flow conditions. The evaluation assumes that flow rates and metal concentrations in the Level 1 adit discharge remain constant. The calculations should be revisited as more data become available.

Predicted Elk-08 Concentrations (Concentrations in micrograms per liter)

		Cadmium	Copper	Lead	Manganese	Zinc
Acute WQS	65 mg/L	1.2	9.0	40	2,590	99
	100 mg/L	1.7	13.4	65	2,990	143
Chronic WQS	65 mg/L	0.31	6.2	1.6	1,430	86
	100 mg/L	0.40	9.0	2.5	1,650	124
Alternative 3A	Spring	0.82	3.5	6.9	54	**155**
	Fall	0.51	0.05	0.36	314	**107**
Alternative 3B	Spring	0.40	1.6	3.9	54	85
	Fall	0.51	0.05	0.36	314	**107**
Alternative 3C	Spring	0.04	0.04	1.3	54	25
	Fall	0.51	0.05	0.36	314	**107**
Alternative 3D	Spring	0.03	0.04	1.3	54	24
	Fall	0.49	0.05	0.33	315	**100**
Alternative 3E	Spring	0.82	3.5	6.9	54	**155**
	Fall	0.51	0.05	0.36	315	**107**

Shaded cells with bold text indicate concentrations are greater than the acute and chronic standards at hardness 65 mg/L. Shaded cells without bold text indicate concentrations are greater than the chronic standard and less than the acute standard at hardness 65 mg/L.

The estimate of metal loading at Elk-08 indicates that the WQS for copper, lead, manganese, and zinc can be met at Elk-08 in a system that does not allow significant bypass of contaminants. It is expected that DO, *E. Coli*, and pH standards would be met at Elk-08.

Metals removal greater than that seen in the pilot system could occur. First, the percent metals removal could increase if the flow from the adit into the reactor is lower than the design flow rate thereby increasing the retention time in the BCR. The effluent metal concentrations would decrease during periods when the BCR is not operating at full capacity. This has not been proven in full scale operations and the magnitude of the effect is unknown. Second, zinc removal in the pilot system has improved in 2009. The results were too recent to be included in the Golder evaluation, but will be reported in the 2009 annual pilot performance report and should be considered when they are available. Third, comparison of the data used to estimate the expected effluent metal concentrations from at PTS with duplicate data from a different laboratory indicate that the data used in this analysis may be biased high for zinc. If that is the case, lower zinc concentrations may be expected in the PTS effluent and at Elk-08.

The ability of a PTS to discharge water that meets WQS depends on how soon after startup the standards need to be met. This is primarily a concern for pH, residual nutrients (i.e., BOD, ammonia, phosphorus) and *E. coli.* During the first year of operation the elevated BOD concentrations in the PTS effluent would likely result in DO levels less than the ARAR of 6 mg/L even in a system with a wetland. The expected *E. coli* concentrations in the PTS effluent during the first year of operation would also likely exceed the ARAR. It is expected that these standards would be met at Elk-08.

Protection of Wetlands and Floodplains – The PTS would be constructed so that the total wetland area would remain constant or increase rather than decrease. Wetlands installed as part of the removal action may be disturbed during construction. Work in Elk Creek would be performed in accordance with substantive Clean Water Act Section 404 requirements.

Soil and Hazardous Waste – Treatment residuals would be managed in accordance with state and federal disposal requirements.

Air – Dust controls would be implemented during construction. Odor controls may be required for the bioreactor.

Fish and Wildlife – Site activities would be coordinated with natural resource trustees to ensure the treatment system, new road, and construction activities pose no threats to protected species.

Noise Control – Construction would not occur near population centers. The system is not expected to produce noise in the long term.

Long-Term Effectiveness and Permanence

There is limited information regarding the long-term operation of a PTS with similar site components at similar site conditions. The pilot testing has demonstrated the ability of a BCR to adapt to site conditions and effectively treat the adit discharge water, providing a level of confidence that a full-scale operation would be effective. The residual risk for a PTS includes risks posed by contact with, or ingestion of, untreated adit discharge and treatment residuals (i.e., spent BCR media, settling pond sludge, mixing basin sludge).

Adit discharge would remain untreated whenever the adit discharge rate exceeds the design flow rate, reducing the overall effectiveness of the system. The lowest design flow rate would coincide with the highest untreated adit discharge and the highest design flow rate would minimize the risk posed by untreated adit discharge.

Treatment of adit discharge would reduce the loading of contaminants to Elk Creek for as long as the system operates. As with any water treatment system, long-term operation and maintenance and monitoring would be required. The PTS would function for long periods of time (i.e., winter and spring months) without regular supervision. Annual operation and maintenance tasks and monitoring would be completed in summer and fall months when the site is accessible by vehicle.

The proper handling and disposal of treatment residuals (i.e., settling pond sludge, spent BCR media, and mixing basin sludge) would be required in order to minimize residual risk. The BCR media, for instance, would be contained within a concrete basin and covered with a geomembrane liner; the media would not be accessible during system operation. During BCR media replacement events, the spent media would be handled and transported appropriately in order to avoid exposure to, or release of, the spent media. The other residuals, namely the settling pond and mixing basin solids, would be removed, tested to determine disposal requirements, and disposed on a more regular basis as necessary (e.g., every five years). A larger system would generate more residuals than the smaller systems, and a system that does not include a mixing basin would only generate settling basin solids and spent BCR media. The effectiveness of managing the treatment residuals is similar for the five PTS alternatives; however, there would be a higher volume of residuals for the higher capacity options.

A larger system would reduce the risk from untreated adit discharge but would increase the volume of residuals. A smaller system would have a higher risk if it is not sufficient to treat all adit discharge during peak runoff, but would produce less residual material.

Reduction of Toxicity, Mobility, or Volume through Treatment

A PTS would reduce the toxicity of the water discharged to Elk Creek and reduce the mobility and volume (mass) of metals within the water. A PTS with a mixing basin would achieve greater than 98% reduction of cadmium, copper, lead, and zinc for the design flow rate, and a PTS without a mixing basin would achieve more than 99 percent removal for cadmium, copper, and lead and greater than 98 percent removal of zinc.

The annual reduction in dissolved zinc loading to Elk Creek was calculated to provide an indication of the amount of material that would be removed in the various PTS alternatives. The calculations were based on the metal concentrations measured during the mixing study (Golder 2009b) and average flow rates as follows: a high flow period with a flow rate of 200 gpm and a duration of one month, a medium flow period with a flow rate of 30 gpm and a duration of 3 months, and a low flow period with a flow rate of 10 gpm and a duration of eight months.

The anticipated annual mass reduction in loading of metal contaminants to Elk Creek is summarized below. As expected, the high flow alternatives (Alternatives 3C and 3D), would have the higher mass removal rates and the low flow alternatives (Alternatives 3A and 3E) would have the lowest mass removal.

Annual Metal Removal (pounds per year)

Alternative	Cadmium	Copper	Lead	Zinc
Alternative 3A	8	15	29	1,525
Alternative 3B	11.2	21	40	2,097
Alternative 3C	17	30	58	3,128
Alternative 3D	15	27	52	2,807
Alternative 3E	8	15	29	1,525

The metals would precipitate primarily in the BCR media and mixing basin. With proper operation and maintenance of the system, including replacement of the BCR media, the metal removal would be irreversible. The PTS would generate settling basin solids, BCR media, and mixing basin sludge (for designs that include a mixing basin). The residuals would require periodic removal and disposal. There is uncertainty over the characteristics of the treatment residuals and whether they would constitute hazardous waste. Fixation of the residuals may be necessary in order to render the residuals non-hazardous and allow disposal in a non-hazardous landfill or on-site repository.

In general, a higher design flow rate would provide greater reduction in the mobility and volume of metals discharged to Elk Creek when the adit discharge flow rate exceeds the design flow rate, but would also produce a higher volume of residuals. There is little benefit to a larger system if the extra capacity is not used. If the adit discharge flow rate is reduced by other remedial alternatives, this comparison of the alternatives should be reconsidered.

Short-Term Effectiveness

Given the remote location of the site, the remedial action would not pose a risk to the community of Crested Butte. The protection of construction workers would include safeguards against potential residual soil contamination and contact with or ingestion of contaminated water. Other site hazards include altitude-related considerations (i.e., harsh weather conditions, altitude sickness) and a steep and narrow access road.

The startup period for the BCRs would be approximately two months and consist of a two-week incubation period followed by six weeks of flow increases. During incubation, weekly measurements of BCR effluent would be taken for indicators of sulfate reduction (i.e., DO, ORP, sulfate, sulfide, metals). After positive indicators of sulfate reduction are detected, flow would be initiated to the BCRs. The flow rates would be increased up to the design flow rate over a six-week period. The treatment system would likely achieve the predicted metal removal rate and effluent concentrations upon completion of the startup period. The aerobic wetland, on the other hand, would likely require at least three to five years to reach plant maturity during which time only partial treatment of BOD would be expected.

The risks to the local community and protection of construction workers from site hazards associated with construction are similar for the different PTS designs. The treatment system startup period would be similar for all of the design alternatives except for Alternative 3A because it includes an aerobic wetland and would require a longer startup period before the system is fully effective in treating residual nutrients.

Other environmental impacts that could result from the implementation of this treatment alternative include the following.

- Release of untreated water during peak flow.
- Visible treatment system at Level 1.
- Disturbance of forested land to construct the aeration channel and new road.

Implementability

Constraints on implementability include a short construction season, a harsh site climate, difficult site access, and potential limitations on construction of a PTS on USFS property. The primary physical constraint on implementation would be the short construction season (i.e., July through September) due to the harsh climate. The construction of a PTS would consist of typical activities such as transport of substrate materials, excavation, grading, concrete placement, trenching, piping, and soil placement in the wetland. Atypical construction activities would include mixing and placement of BCR media. This alternative would also require some excavation of bedrock, especially in the area adjacent to the adit portal and in the vicinity of steep slopes. A geotechnical investigation would be required to determine the extent and method of bedrock excavation. The technical feasibility has been demonstrated by successful construction and operation of the pilot system at the site and multiple full-scale PTSs across the country.

The remote site location and harsh climate would restrict monitoring; an automated monitoring system that permits winter and spring monitoring should be considered.

The technical feasibility is similar for the five PTS alternatives. Alternatives 3A, 3B, and 3E would likely be constructed in a single construction season while the larger alternatives (i.e., Alternatives 3C and 3D) would likely require two constructions seasons.

The administrative feasibility of these alternatives may be limited by property ownership issues. There may be administrative hurdles in acquiring property interests for the bioreactor and the road realignment. PTS alternatives 3A, 3B, 3C, and 3D would rely on construction of part of the PTS on USFS land. The administrative feasibility would also depend on agency agreement on acceptable discharge limitations.

A PTS could be constructed in series with or parallel to any of the other alternatives; however, if Alternative 3 is constructed in conjunction with Alternative 5B, the bulkhead should be constructed first to reduce disturbance to the PTS.

Cost

The cost categories for construction capital of this alternative include road realignment, unit process construction, substrate materials, and a remote sampling/monitoring system. The capital costs were divided between direct and indirect costs. The indirect costs for mobilization, scope contingency, bid contingency, engineering, project management, and construction management were based on EPA guidance (EPA 2000b). The majority of construction costs were estimated based on RS Means (RSMeans 2009) and actual pilot construction costs. A location adjustment factor of 1.3 was applied to RSMeans costs to account for elevated local construction costs.

Annual operation and maintenance (O&M) costs and periodic costs include operation and maintenance, sampling, laboratory analysis, and reporting. The annual cost for every fifth year includes increased system maintenance (i.e., solids/sludge removal) and a five-year report. The O&M costs assume that the spent BCR media is non-hazardous and would be replaced every 15 years. For the larger alternatives where BCR media replacement is expected to take two years, the costs for two years mobilization and media replacement were added and the total was used in calculating the year 15 and year 30 O&M costs. This was done to simplify the cost calculations and avoid extending the cost analysis past the 30-year period of performance.

A net present value analysis was conducted based on EPA guidance and considering a discount rate of 7%. The capital and 30-year period of performance cost estimates are provided in Appendix A and summarized below. As expected, the costs are positively correlated with design flow; the high flow systems with the largest footprint have substantially higher costs than the low flow systems.

Additional information regarding cost assumptions for the PTS alternatives is presented in Section 4.3.

Capital and 30-year Period of Performance Costs

Alternative	Total Capital Cost	O&M and Periodic Costs	Net Present Value, 30-year Period of Performance
Alternative 3A	$1,504,000	$1,220,000	$ 2,005,000
Alternative 3B	$1,960,000	$1,616,000	$2,610,000
Alternative 3C	$4,368,000	$2,567,000	$5,381,000
Alternative 3D	$4,479,000	$2,547,000	$5,473,000
Alternative 3E	$1,195,000	$1,220,000	$1,696,000

5.2.4 Alternative 4 – Treatment at Mt. Emmons Project WTP

Alternative 4 includes the conveyance of mine discharge from Level 1 to the Mt. Emmons Project WTP as shown on Figure 4-10. The water would be treated at the WTP and discharged to Coal Creek. This would eliminate the discharge of contaminants from Level 1 into Elk Creek.

The major components of Alternative 4 include the following.

- Rehabilitation of the Level 1 portal and adit up to the flow retention barrier location.
- A flow retention barrier constructed approximately 20 feet inside the Level 1 portal to facilitate pipe capture and transport of mine discharge. The barrier would be installed across the width of the adit (approximately 6 feet), 3 feet tall, and 2 feet deep.
- A 4-inch inner diameter (I.D.) HDPE pipe and control valve installed through the flow retention barrier.
- Approximately five miles of 4-inch I.D. HDPE pipe with cleanout valves approximately every 200 feet to facilitate pipe inspection and maintenance.
- A 250,000 gallon tank installed upslope of Mt. Emmons Project WTP for storage of approximately 40 hours of flow at 100 gpm.
- A 4-inch I.D. HDPE pipe from the discharge tank to Mt. Emmons Project WTP.

Evaluation of this alternative assumes that the Mt. Emmons Project WTP has the capacity to treat the additional volume of water from Standard Mine, is utilizing a treatment process that would address the contaminants in Standard Mine discharge, the owners would agree to treat the additional volume, and the ability of the agencies to develop a treatment agreement with a private corporation.

The benefits of Alternative 4 include the following.

- Diverting all of the Level 1 adit discharge to the Mt. Emmons WTP would eliminate the loading of metals from the Level 1 adit discharge to Elk Creek.
- Eliminating the Level 1 adit discharge to Elk Creek would likely allow surface water ARARs to be met.
- Water treatment would provide consistent effluent concentrations in the discharge to Coal Creek.

Potentially significant issues associated with Alternative 4 include the following.

- This alternative would require agreement with the owners of the Mt. Emmons Project WTP to treat water from Standard Mine on a long-term basis.
- Administrative issues regarding EPA and the state paying for treatment at a private facility or EPA funding improvements to a privately owned facility may prevent the selection of this alternative.
- The capacity and treatment process of Mt. Emmons Project WTP may not be capable of handling additional volume or removing metals to the desired discharge concentrations.
- The costs for water treatment at the Mt. Emmons Project WTP may be significantly different than those assumed for this evaluation.
- Changes to the existing CDPS permit, which is currently being reviewed for renewal, that result in additional treatment requirements or increased cost may occur.
- The blockage within the adit of Level 1 could be compromised and cause damage to the flow barrier and piping resulting in a sudden influx of contaminated water to Elk Creek and ultimately Coal Creek.
- Failure of the piping system could result in releases of contaminated water along the piping route.

Overall Protection of Human Health and Environment

Protection to human health and the environment would be achieved by reducing or eliminating the flux of contaminants that report to Elk Creek via Level 1 adit discharge by piping the water for treatment at the Mt. Emmons Project WTP. The water would be treated prior to release into Coal Creek, resulting in significantly less loading of contaminants to Elk Creek and a net decrease in overall loading to Elk Creek and Coal Creek.

This alternative addresses the surface water RAOs. This alternative would reduce the flow from the Level 1 adit into Elk Creek to zero, providing protection for surface water receptors. The protectiveness to environmental receptors in Coal Creek downstream of the WTP discharge point depends on the level to which the water is treated. The WTP discharge limitations are based on flow and metal concentrations. Under their CDPS permit, the facility is allowed to discharge 0.675 million gallons per day from October through June and 0.75 million gallons per day from July through September (CDPHE 2008b). The permit allows discharges with a daily maximum concentration of 1.9 µg/L cadmium and 390 µg/L zinc. Other contaminants must be reported to the permitting authority.

Piping the Level 1 adit discharge to the Mt. Emmons Project WTP does not address the soil or groundwater RAOs.

Compliance with ARARs

Surface Water Quality – Alternative 4 would allow most or all WQS to be met in Elk Creek. The Mt. Emmons WTP CDPS permit would be amended to allow treatment of Standard Mine Level 1 adit discharge water.

Protection of Wetlands and Floodplains – Alternative 4 would be constructed to minimize the area of wetland disturbance and leave an equivalent wetland area after construction as existed prior to construction of the pipeline. The reduction in flow in Elk Creek is not expected to reduce the viability of downstream wetlands.

Soil and Hazardous Waste - Alternative 4 would generate treatment residuals that would be managed in accordance with solid and hazardous waste regulations.

Air – Dust suppression would be used during construction. The process should not generate odors.

Fish and Wildlife – Site activities would be coordinated with natural resource trustees to ensure the treatment system poses no threats to protected species.

Noise Control – Construction would not occur near population centers. The system is not expected to produce noise in the long term.

Long-term Effectiveness and Permanence

Alternative 4 would permanently eliminate metals discharged from the Level 1 adit into Elk Creek by continually piping the water to the Mt. Emmons WTP for treatment. Treated water would be discharged to Coal Creek after significant reductions in metal concentrations, making the alternative effective in reducing contaminant loading to Elk Creek and downstream waters.

This alternative relies on the ability to collect water at the Level 1 adit, deliver the contaminated water to the Mt. Emmons WTP, and ensure the water is treated to the desired levels. The following factors could affect the long-term effectiveness and performance of Alternative 4.

- Developing and maintaining an agreement with the owners of the Mt. Emmons Project WTP to treat the water on a long-term basis. Maintaining the agreement depends on the continuity of operations of the WTP facility, which could be impacted by the economic viability of the current and future owners of the Mount Emmons Project.
- The ability of the WTP to remove metals to the desired levels on a continual basis.
- Effective maintenance of the collection, piping, and delivery system. Maintenance would be required to make sure the system, including the WTP, is functioning properly and that accidental spills are contained. Potential maintenance issues for the delivery system include barrier reinforcement, pipe segment replacements, pipe cleanout, precipitate buildup in the pipe and tank, and sediment buildup behind the flow retention barrier.
- Although maintenance of the system would occur regularly, sudden malfunction of the system could result in accidental release of contaminated water until the system could be repaired. Emergency response measures could be employed as soon as the deficiency is noticed to reduce environmental impacts, but the response would occur after the release. The impact of a sudden release is expected to be short term.
- Effective security. The system is susceptible to the negative effects of vandalism that could impact the long-term performance and permanence of the system. Institutional controls would be used to reduce security risks at Level 1 and at the Mt. Emmons Project WTP, but it is unlikely that controls would be implemented to continually protect five miles of pipe in this remote location.

This alternative only reduces risk from the Level 1 adit discharge. Residual risks that remain after diverting water from Level 1 to the Mt. Emmons WTP include the following.

- Risk to human and environmental receptors from waste rock at Levels 5 and 98 would not be addressed.
- Risks to aquatic and other environmental receptors from adit discharges at Levels 2, 3, 5, and 98 would not be addressed.

Reduction of Toxicity, Mobility, and Volume through Treatment

Alternative 4 would not reduce the mobilization of contaminants from source areas inside the mine workings, but treatment would remove the bulk of the contaminants from the water thereby reducing the toxicity of the water discharged to the receiving stream. The toxicity of water flowing in Elk Creek would be reduced.

Metals-laden sludge is a residual of the lime precipitation water treatment process used at the Mt. Emmons Project WTP. The mobility of metals in the sludge can be effectively managed by disposal of the waste in a permitted disposal facility.

Short-Term Effectiveness

Due to the location of the project site and type of construction activities, the short-term risk to the community is expected to be low. Potential risk to on-site workers is associated with operation of machinery, confined space work within the adit, potential exposure to contaminated materials within the mine workings, high elevation work, and work conducted adjacent to steep mountainous slopes. These risks are expected to be low with the implementation of mitigation measures to include appropriate management, construction, health and safety, and security procedures and controls.

The RAOs addressed by this alternative could be achieved in relatively short time. The contribution of metals from the Level 1 adit discharge to Elk Creek would cease immediately upon implementation of this alternative.

Other environmental impacts that could result from the implementation of this treatment alternative include the following.

- Accidental release of discharge from the pipeline.
- Visible pipeline along the travel routes.
- Reduction in water reporting to Elk Creek.
- Potential loss/displacement of wildlife as a result of the reduction of water reporting to Elk Creek.

Implementability

Construction of this alternative can be completed with standard construction labor and equipment. The necessary equipment and materials are standard and readily available within the marketplace but lead time may be needed for delivery. The ability to construct this alternative could be limited by adverse weather conditions, uneven terrain, limited construction season, and local availability of qualified labor.

O&M of the system described by this alternative is expected to be limited to inspections and standard repairs and cleaning. Operation would include regular inspections of the Level 1 adit flow retention barrier, piping, and discharge tank. Operation of the Mt. Emmons Project WTP would be managed by the owners of the Mt. Emmons Project Mine. Operation of the Mt. Emmons Project WTP may require specialized labor but specialized labor is not expected to be required to maintain the water collection and delivery system.

Samples needed to monitor the success of this alternative could be easily collected at the site and at the Mt. Emmons WTP. Monitoring in Elk Creek would be easily implementable during summer months and moderately implementable during winter months.

The factor that most limits the implementability of Alternative 4 is the ability of the agencies to enter an agreement with the Mt. Emmons Project WTP owners. The agencies may be unwilling or unable to enter into an agreement for water treatment by a private corporation. If the agencies have the authority to enter such an agreement, there could still be issues with the facility regarding the available storage capacity for staging water prior to treatment, the load capacity, and the treatment process. Alternative off-site treatment facilities or publicly owned treatment facilities would likely be difficult to obtain given the remote location of the mine site and the facilities that are locally available.

Additional agency issues may include contaminant discharge limits, the water quality at the Mt. Emmons Project WTP discharge location on Coal Creek, and long-term operations and maintenance issues. Local, state, and federal agencies may have a difference of opinion on the metals concentrations allowable in treated water that may be discharged to Coal Creek or the allocation of the contaminant load in Coal Creek to the Standard Mine site. The expenses and responsibilities associated with operations and maintenance could limit agency approval of this alternative.

There is the potential that this alternative would not by itself adequately address all of the RAOs and that additional remedial actions may be necessary. Remedial actions that would address those RAOs not met by this alternative, as discussed above, could be implemented in series with, or parallel to, this alternative. This alternative offers the flexibility of implementing additional remedial actions during or after its institution with the exception of Alternative 5 – Bulkhead at Level 1. Installation of a bulkhead would be conducted farther into the tunnel than the flow retention barrier proposed for Alternative 4 and require removal of the flow retention barrier to access the bulkhead location. While not the most efficient process, this could be conducted with minimal disruption to Alternative 4 by the use of mitigating measures during construction. The flow retention barrier shown on the Alternative 4 conceptual design drawings would be replaced by the flow-through bulkhead for purposes of metering water to the treatment facility. An impermeable bulkhead would make this alternative redundant.

This alternative could easily be reversed by removing the collection system from within the mine workings and disabling/removing the delivery pipeline and ancillary structures at the Mt. Emmons WTP.

Cost

The cost categories for construction capital of this alternative include road improvement, portal rehabilitation, adit rehabilitation, flow retention barrier construction, pipeline installation, and discharge tank installation. A contingency has been included for unlisted items, design (scope) contingency, project management, remedial design, construction management, mobilization and general construction requirements, and construction (bid) contingency. The engineer's preliminary opinion of probable capital cost for this alternative has been provided as Table A-1 in Appendix B.

O&M and periodic costs have been estimated over a 30-year period. O&M cost categories associated with this alternative include annual inspection and equipment upgrade, replacement, and repair. Contingencies for construction (bid) contingency, project management, and technical support have also been included. The engineer's preliminary opinion of probable O&M costs for this alternative for 1 year and over a 30-year period have been provided as Tables A-2 and A-3 in Appendix B, respectively.

Costs for treatment at the Mt. Emmons WTP were calculated separately because cost negotiations were not initiated as part of this FS. An estimated cost of $0.007 per gallon was used based on the cost required to treat water at the Argo WTP at the Clear Creek NPL site (CDPHE 2009). The treatment volume was estimated as 100 gpm for one month, 30 gpm for three months, and 10 gpm for the remaining eight months for an annual average of 22.5 gpm.

Periodic cost categories associated with this alternative include 5-year reviews along with road maintenance and equipment upgrade, replacement, and repair every 10 years. Associated contingencies for construction (bid) contingency, project management, and

technical support have also been included. The engineer's preliminary opinion of periodic cost of this alternative has been provided as Table A-4 in Appendix B.

A present value analysis was conducted on all of the costs developed following EPA guidance (EPA 2000b) and considering a discount rate of 7 percent. The engineer's preliminary opinion of present value cost of this alternative has been provided as Table A-5 in Appendix B. Estimated current dollar costs are summarized below.

Estimated Costs **Alternative 4 – Mt. Emmons Project Water Treatment Plant**	
Construction Costs	$1,906,200
O&M and Periodic Costs	$533,700
Treatment Costs*	$2,485,200
Net Present Value, 30-year period of performance	$3,138,900

* Treatment costs are estimated at $0.007/gallon, the cost of treatment at the Argo WTP at the Clear Creek NPL site.

5.2.5 Alternative 5 – Bulkhead at Level 1

Alternative 5A - Impermeable Bulkhead and Alternative 5B – Flow-Through Bulkhead focus on reducing the flow of contaminated water from Level 1 to Elk Creek. The reduction of contaminated flow would be achieved with the construction of a reinforced concrete bulkhead within Level 1 to retain mine discharge within the mine workings (Figure 4-12). The components for Alternatives 5A and 5B are identical. The piping embedded in the bulkhead would be used either to relieve pressure behind the bulkhead (Alternative 5A) or to regulate flow (Alternative 5B). For Alternative 5B, the flow of water through the bulkhead could be regulated to meet various objectives. Water could be released to coincide with periods of high runoff, thus reducing toxicity to the aquatic receptors in Elk Creek. Alternately, the valve may be used to modulate flow to a water treatment system so the system could be designed to operate at a low to moderate flow rate throughout the year rather than be designed to accommodate high flows that occur during spring runoff and then operate at a fraction of capacity during low flow months.

Because the only difference between Alternatives 5A and 5B is the use of the bulkhead as an impermeable or flow-through barrier, the assessments regarding the evaluation criteria have been conducted together and aspects that would differ between the two alternatives are discussed.

The major components of Alternatives 5A and 5B include the following.

- Removal of the blockage located approximately 80 feet from the Level 1 portal and securing the area to prevent additional cave in.
- Rehabilitation of the Level 1 portal and adit up to the bulkhead location along with preparation of the back, floor, and ribs of the adit at the bulkhead location to facilitate construction activities.
- Construction of the bulkhead including grout curtain, dowel anchors, piping, and a portal gate.

The benefits of Alternative 5 include the following.

- Eliminating the Level 1 adit discharge to Elk Creek (Alternative 5A) would likely allow surface water ARARs to be met.

- Controlling the Level 1 adit flow (Alternative 5B) so it is discharged to Elk Creek at a time when it could either be treated using Alternative 3 or coincide with periods of high runoff would improve the likelihood of meeting surface water ARARs.
- Surface water improvements would be immediate upon completion of construction (Alternative 5A) or flow modifications (Alternative 5B).
- A flow-through bulkhead would decrease the required design flow for an associated water treatment system, thus reducing system size and capital and O&M costs.

Significant issues associated with Alternatives 5A and 5B include the following.

- It is assumed that Level 1 and subsequent upper levels would provide sufficient capacity to contain the mine discharge. This alternative could result in an increase in discharge from Level 2.
- Alternative seepage pathways out of the mine could develop due to increased head pressures within the workings. This would apply to Alternative 5A; if water is released regularly, less pressure would build up behind a permeable bulkhead (Alternative 5B). Monitoring may be needed to identify and control new flow paths that result in contaminated seeps or increased metals concentrations in Elk Creek or groundwater.
- Alternative 5B would require deliberate planning and effort to coordinate releases with periods of high runoff or would require a method of treatment for discharged mine water to ensure WQS are met in Elk Creek.

Overall Protection of Human Health and Environment

Alternative 5A would protect human health and the environment by eliminating the discharge of metal-laden water from the Level 1 adit to Elk Creek. In addition, installation of a bulkhead and development of a mine pool may reduce oxygen concentrations in the mine workings, resulting in decreased oxidation of metal rich source materials and therefore decrease loading to Elk Creek and downstream waters if water must be discharged in the future. The effect may be minimal because most of the highly contaminating materials are located at and above Level 2, which would not be saturated.

Alternative 5B would protect human health and the environment by regulating releases of metal-laden water from the mine workings to Elk Creek. The controlled releases may be timed to maximize the efficiency of a water treatment system or to minimize contaminant concentrations in Elk Creek. Contaminant concentrations in Elk Creek would be minimized by either timing the releases to coincide with high runoff or treating the water prior to discharge to Elk Creek.

This alternative addresses the surface water RAOs, but does not address the groundwater and soil RAOs. Groundwater located in the vicinity of the Standard Mine fault and in the mine workings contains elevated concentrations of site contaminants, though the extent and seasonality of the contamination has not been well quantified. The groundwater may be further impaired if alternative flow paths out of the mine workings develop due to water build-up in the mine workings.

Compliance with ARARs

Surface Water Quality – Alternative 5A would allow most or all WQS to be met in Elk Creek. Contaminated water released from the flow-through mechanism at the bulkhead may have high metal concentrations and would be monitored to ensure that WQS are met in Elk Creek.

Protection of Wetlands and Floodplains – This alternative could reduce flow in Elk Creek, which would be most highly affected during low-flow periods. Construction of the bulkhead should not impact wetlands or the floodplain.

Soil and Hazardous Waste – Wastes removed from behind the bulkhead would be managed in accordance with solid and hazardous waste regulations.

Air – Dust suppression would be used during construction if necessary. The bulkhead should not generate odors.

Fish and Wildlife – Construction would occur in the mine workings and is not expected to negatively affect fish and wildlife. Site activities would be coordinated with natural resource trustees to ensure the system poses no threats to protected species.

Noise Control – Construction would not occur near population centers. A bulkhead would not be expected to produce noise in the long term.

Long-term Effectiveness and Permanence

A bulkhead would control the flow of water that discharges from the Level 1 adit, providing long-term reduction of metal loading to Elk Creek.

This alternative relies on the ability of the bulkhead to retain water within the mine workings. The following factors could affect the long-term effectiveness and performance of Alternatives 5A and 5B.

- Pressures that develop behind the Alternative 5A bulkhead could result in creation of seepage flow pathways. Seepage that may develop is expected to be lower in metal concentrations due to the decreased oxidation in the mine workings and natural filtration along the newly developed flow pathways.
- Maintenance would be required to make certain the system continues to function properly. Potential maintenance items include valve repairs, pipe segment replacements, pipe cleanout, and cleanout of sediment buildup behind the bulkhead.
- Monitoring of bulkhead integrity would be required to protect against unintended discharges of water. Pressure or water level monitoring may be performed to monitor the buildup of water behind the bulkhead.
- Low pH water collected behind the bulkhead could impact the long-term performance of the bulkhead requiring repair or replacement of the structure.
- System failure could result in a large release of contaminated water to the watershed.

The system is not likely to be susceptible to the negative effects of vandalism or cold temperatures.

This alternative primarily reduces risk from the Level 1 adit discharge and reduces the volume of water that becomes contaminated as it passes through the mine workings. Residual risks that remain after installation of a bulkhead include the following.

- Water that accumulates behind the bulkhead would contain elevated levels of metals that would be transported to Elk Creek when it is released from behind the bulkhead.
- Alternate flow pathways may develop and transport metal contaminants from the mine workings to groundwater and potentially to surface water.
- Risk to human and environmental receptors from waste rock at Levels 5 and 98 would not be addressed.
- Risks to aquatic and other environmental receptors from adit discharges at Levels 2, 3, 5, and 98 would not be addressed.

Reduction of Toxicity, Mobility, and Volume through Treatment

Alternatives 5A and 5B would reduce the mobility and volume of contaminants that discharge from the Level 1 adit by retaining contaminated water within the mine workings. Implementation of Alternative 5A would stop the transport of metal contaminants from Level 1 to Elk Creek thus reducing the toxicity of Elk Creek to aquatic organisms. Alternative 5B could reduce toxicity to aquatic organisms in Elk Creek if the bulkhead is used to regulate flow to a water treatment system or to discharge water to coincide with periods of high runoff.

Construction of a bulkhead may result in a smaller amount of sulfide oxidation in the mine workings as the water builds up behind the bulkhead and reducing conditions develop, thus reducing the mobility of metal contaminants. Regular inflows of oxidized water may continue, and the retained water may not become sufficiently reduced that sulfide oxidation is significantly inhibited. Also, much of the oxidation is expected to occur in portions of the mine above Level 1 (USGS 2009); therefore a bulkhead may not result in significantly reduced mobilization of metal contaminants from source materials into site waters.

Water that develops an alternative pathway out of the Level 1 workings as a result of the impermeable bulkhead (Alternative 5A) would likely be treated through natural attenuation as it passes through subsurface rock formations. If water finds a direct flow path to Elk Creek that surfaces not far from the workings, natural attenuation may not occur.

Short-Term Effectiveness

Due to the location of the project site and type of construction activities, the short-term risk to the community is expected to be low. Potential risks to on-site workers are associated with operation of machinery, confined work space within the adit, and potential exposure to contaminated materials within the mine workings. These risks are expected to be moderate with the implementation of mitigation measures to include appropriate management, construction, health and safety, and security procedures and controls.

The RAOs addressed by this alternative could be achieved in relatively short time. The contribution of contaminated water to Elk Creek from the Level 1 adit would be immediately removed upon implementation of Alternative 5A and would be immediately controlled upon implementation of Alternative 5B.

The following environmental impacts could occur after implementation of this treatment alternative.

- Reduction in the volume of water that reports to Elk Creek.
- Potential loss/displacement of wildlife as a result of the reduction of water reporting to Elk Creek.
- Accidental release of contaminated water from behind the bulkhead.
- Development of new seepage flow pathways.
- Increased discharge from other levels of the mine.

Implementability

The construction of the major components of this alternative would require specialized labor and construction equipment that may not be locally available but would be available regionally. The major components include standard of practice materials that are expected to be reliable with regular maintenance. Lead time may be needed in delivery of the equipment and materials required to implement these alternatives. O&M of the system is expected to be limited to inspections, repairs, and cleaning.

Samples needed for monitoring could be easily collected.

Agency approval of Alternative 5A is expected to be related to the ability of the bulkhead to permanently retain water. Risk of breakout would be addressed during design. Approval for Alternative 5B is expected to be related to the quality of water that would be released from the bulkhead. Local, state, and federal agencies may have a difference of opinion on the acceptable metals concentrations of the water discharged to Elk Creek and the discharge timing. Minimal operations and maintenance would likely occur through the life of this alternative but approval could be affected by the long-term O&M responsibilities and the impact to the agency or agencies responsible for O&M.

There is the potential that this alternative would not by itself adequately address all of the RAOs and that additional remedial actions may be necessary. Remedial actions that would address those RAOs not met by this alternative could be implemented in series with or parallel to this alternative. If Alternative 5B is used with Alternative 3, Alternative 5B should be constructed first to minimize disturbance of the PTS.

This alternative could be reversed with a moderate level of effort by removing the bulkhead. Alternately, the flow-through mechanism could be used to drain the workings and restore the existing Level 1 adit discharge flow rate, alleviating the need to remove the structure.

Cost

Costs for Alternatives 5A and 5B would be identical. The cost categories for construction capital of these alternatives include road improvement, dewatering behind Level 1 blockage, portal rehabilitation, adit rehabilitation, blockage removal and reinforcement, and bulkhead construction. A contingency has been included for unlisted items, design (scope) contingency, project management, remedial design, construction management, mobilization and general construction requirements, and construction (bid) contingency. The engineer's preliminary opinion of probable capital cost for this alternative is provided as Table A-6 in Appendix B.

O&M and periodic costs were estimated over a 30-year period. O&M cost categories associated with the alternative include annual monitoring and equipment upgrade, replacement, and repair. Contingencies for construction (bid) contingency, project management, and technical support have also been included. The engineer's preliminary opinion of probable O&M costs for this alternative for 1 year and over a 30-year period are provided in Tables A-7 and A-8 in Appendix B, respectively.

Periodic cost categories associated with these alternatives include 5-year reviews along with minor road maintenance, equipment upgrade, replacement, and repair, and adit rehabilitation every 10 years. Associated contingencies for construction (bid) contingency, project management, and technical support have also been included. The engineer's preliminary opinion of periodic cost of this alternative are provided in Table A-9 in Appendix B.

A present value analysis was conducted on all of the costs developed following EPA guidance (EPA 2000b) and considering a discount rate of 7 percent. The engineer's preliminary opinion of present value cost of these alternatives is provided in Table A-10 in Appendix B. Estimated current dollar costs are summarized below.

Estimated Costs Alternative 5 – Bulkhead	
Construction Costs	$1,970,400
O&M and Periodic Costs	$696,700
Net Present Value, 30-year period of performance	$2,213,000

5.2.6 Alternative 6 – Surface Water Diversion

Alternative 6 includes construction of surface water diversion berms to intercept and direct surface water away from the mine workings, as illustrated on Figure 4-13. Surface water diversions would direct water toward lower portions of the Elk Creek Basin, reducing the potential for infiltration of water into the mine workings.

The major components of Alternative 6 include:

- Clearing and grubbing along the alignment of each berm.
- Foundation preparation for the berms and culverts, if used.
- Installation of culverts or open water crossings such as rolling dips to maintain access roads.
- Construction of berms including key trench excavation in bedrock and processing, hauling, and placement of berm earthen materials.
- Processing, hauling, and placement of riprap material for erosion protection.

The benefits of Alternative 6 include the following.

- The surface water and near-surface groundwater would be diverted away from locations where it would flow into the Standard Mine workings where it contacts contaminating materials.
- The reduced flow would reduce the Level 1 adit discharge flow rate and the metal load to Elk Creek.
- The decreased loading of metals to Elk Creek may allow surface water ARARs to be met in Elk Creek.

- If water treatment is still needed to meet surface water ARARs, reducing the flow into the mine workings would decrease the required design flow for the water treatment system, thus reducing system size and capital and O&M costs.
- Reducing the flow of water through the mine will likely improve downgradient groundwater quality.

Significant issues associated with Alternative 6 include the following.

- It is assumed that water is entering the mine workings from a combination of surficial infiltration and groundwater seepage. Alternative 6 will only address surficial infiltration.
- Bedrock has been assumed to be at or near the surface (USGS 2010a). A significant depth to bedrock could result in additional construction costs.
- Based on investigations conducted in 2006 for the Standard Mine waste repository, sufficient quantities of earthen material have been assumed to be available for berm construction and erosion protection.

Overall Protection of Human Health and Environment

Alternative 6 would reduce the load of contaminants discharged to Elk Creek by reducing the flow of water into the mine workings, thus decreasing the volume of water that contacts source contaminants in the mine. The magnitude of the load reduction is uncertain because the primary mine inflow locations have not been identified.

This alternative addresses the surface water and groundwater RAOs by reducing the flow of water through the mine workings but does not address the soil RAO.

Compliance with ARARs

Surface Water Quality – The ability of Alternative 6 to allow most or all WQS to be met in Elk Creek is uncertain due to the lack of information regarding the location and of flow paths into the mine workings and the amount of water conveyed through the different flow paths. The flow rate and quality of the Level 1 adit discharge and water quality in Elk Creek and Coal Creek would be monitored to determine the effectiveness of surface water diversions.

Protection of Wetlands and Floodplains – Alternative 6 may disrupt the current wetland configuration by diverting water away from current wetlands and diverting it to other areas that may then develop wetland features. Wetlands would be monitored to identify changes in total wetland area and composition. The surface water diversions would be constructed in a manner that minimizes the area of wetland disturbance and leaves an equivalent wetland area after construction as existed prior to construction of the pipeline. The reduction in flow in Elk Creek is not expected to reduce the viability of downstream wetlands.

Soil and Hazardous Waste – Solid or hazardous waste should not be generated during construction or O&M of Alternative 6. Solids that are cleaned out of ditches will be placed on berm walls or used to fill erosion areas.

Air – Dust suppression would be used during construction. Odors would not be generated.

Fish and Wildlife – Site activities would be coordinated with natural resource trustees to ensure the surface water diversion ditches pose no threats to protected species.

Noise Control – Construction would not occur near population centers. The system would not produce noise in the long term.

Long-Term Effectiveness and Permanence

Long-term effectiveness would be achieved by reducing the infiltration of water into and through the mine workings, thereby reducing the discharge at Level 1. Alternative 6 would not address the infiltration of precipitation in the immediate vicinity of the mine workings, eliminate inflows through fractured bedrock, or totally eliminate the flow of contaminated water from the Level 1 adit.

The effectiveness of surface water diversions depends on the ability to contain the flow of water within the channels. The following factors could affect the long-term effectiveness and performance of Alternative 6.

- Sedimentation of channels, ice damming, vandalism, or other damage of channels could result in channel over-topping.
- Channelized flow could result in excessive erosion.
- Infiltration into the mine workings could occur through newly developed flow paths.
- Annual maintenance would be required to make certain the diversion channels are functioning properly and to repair any damage resulting from erosion or sedimentation. Potential maintenance could include removing debris in culverts, if used, and/or diversion channels, and reconstruction/repair of berms and open water crossings.
- System failure could result in excessive erosion or the infiltration of water into the mine workings and subsequently the Level 1 adit.

Alternative 6 primarily reduces the volume of water that becomes contaminated as it passes through the mine workings and reduces risk from the Level 1 adit discharge. Residual risks that remain after installation of surface water diversions include the following.

- The source of the contaminants would not be controlled. Water that enters the mine workings would still come in contact with source contaminants and discharge at Level 1 which would continue to impact Elk Creek after the alternative is implemented.
- Risk to human and environmental receptors from waste rock at Levels 5 and 98 would not be addressed.
- Risks to aquatic and other environmental receptors from adit discharges at Levels 2, 3, 5, and 98 would not be addressed.

Reduction of Toxicity, Mobility, and Volume through Treatment

Alternative 6 would not provide treatment per se, but it could reduce the volume of water that flows through highly mineralized portions of the mine workings and discharges at Level 1. Sulfide oxidation would be reduced by decreasing the volume of water that flows through highly mineralized zones in the workings between Levels 3 and 1. Metal concentrations in the water would be lower than currently observed in the Level 1

discharge, resulting in an overall decrease in metal loading to Elk Creek and downstream waters and lower toxicity to aquatic organisms and other environmental receptors.

Short-Term Effectiveness

Due to the location of the project site and the type of construction activities, the short-term risk to the community is expected to be low. Potential risk to on-site workers is associated with operation of machinery and work conducted adjacent to steep mountainous slopes. These risks are expected to be low with the implementation of mitigation measures to include appropriate management, construction, health and safety, and security procedures and controls.

The RAOs addressed by this alternative could be achieved in a relatively short period of time. Surface water run-on would be immediately diverted upon implementation of this alternative. It is expected that water flowing through the workings and discharging at Level 1 would decrease over a moderate period of time as water drains out the workings and a new base flow is established.

Other environmental impacts that could result from the implementation of this treatment alternative include:

- Wetlands drying up due to water diversions.
- Development of new wetland areas.
- Potential loss/displacement of wildlife as a result of the changes in the amount of water reporting to segments of Elk Creek.
- Potential loss/changes in vegetation in areas where water is diverted.
- Excessive erosion related to concentrated flows.
- Slope stability issues related to the concentration and saturation of flows.

Channelizing the surface water may increase water velocities and change the location where drainage reaches Elk Creek compared to existing conditions. The lag time that occurs when water flows naturally through surface soils and rock would be decreased when the flow is channelized, causing Elk Creek to have increased volumes of runoff during peak snowmelt or storm events. This could increase the load of total suspended solids that enters Elk Creek, thus reducing the water quality.

Implementability

The construction of the major components of this alternative could be easily implemented with standard construction equipment and labor. The major components of this alternative include standard of practice equipment and materials, which are expected to be reliable with regular maintenance. Lead time may be needed in delivery of the equipment and materials. Operation is expected to include regular inspections of the diversion berms, channels, and culverts or open water crossings. Specialized labor is not expected to be required.

The ability to construct this alternative could be limited by adverse weather conditions, uneven terrain, and limited construction season.

Samples needed for monitoring could be easily collected.

Agency approval of this alternative is expected to be related to the water quality at the discharge location into Elk Creek, long-term operations and maintenance, potential

impacts to wetlands, and impacts related to potential flooding resulting from concentrated flows. Agency approval may be limited because the surface water channels would be constructed on USFS property and may impact USFS roads.

This alternative may not address all of the RAOs. To do so, additional remedial actions may be necessary. Remedial actions that would address the RAOs not met by this alternative could be implemented in series with or parallel to this alternative. Alternatives that include work inside or outside the mine workings could be implemented any time before, during, or after this alternative is implemented.

This alternative could easily be reversed by removing the surface water diversions and ancillary structures, and regrading the topography to its pre-existing contour with a moderate level of effort.

Cost

The cost categories for construction capital of this alternative include road improvement, berm construction, and culvert placement. Culverts were used in the costing rather than rolling dips to provide a conservative estimate. A contingency was included for unlisted items, design (scope) contingency, project management, remedial design, construction management, mobilization and general construction requirements, and construction (bid) contingency. The engineer's preliminary opinion of probable capital cost for this alternative is provided in Table A-11 in Appendix B.

O&M and periodic costs were estimated over a 30-year period. O&M cost categories for this alternative include annual monitoring and equipment upgrade, replacement and repair. Contingencies for construction (bid) contingency, project management, and technical support are included. The engineer's preliminary opinion of probable O&M costs for this alternative for 1 year and over a 30-year period are provided in Tables A-12 and A-13 in Appendix B, respectively.

Periodic cost categories for this alternative include 5-year reviews along with road maintenance and equipment upgrade, replacement, and repair every 10 years. Associated contingencies for construction (bid) contingency, project management, and technical support are also included. The engineer's preliminary opinion of periodic cost of this alternative is provided in Table A-14 in Appendix B.

A present value analysis was conducted on all of the costs developed following EPA guidance (EPA 2000b) and considering a discount rate of 7 percent. The engineer's preliminary opinion of present value cost of this alternative is provided in Table A-15 in Appendix B. Estimated current dollar costs are summarized below.

Estimated Costs Alternative 6 – Surface Water Diversion	
Construction Costs	$1,780,900
O&M and Periodic Costs	$733,500
Net Present Value, 30-year period of performance	$2,033,400

5.2.7 Alternative 7 – Flowable Fill and Foam in Level 3

Alternative 7 includes the placement of flowable fill on the existing floor in Level 3 (Figures 4-14 and 4-15). To accomplish this, the portal and adit of Level 3 would be rehabilitated and the raises would be re-collared and backfilled with polyurethane foam.

Water would be directed out of the Level 3 portal. The purpose of this alternative is to reduce contamination of water in the Level 3 workings, collect water at Level 3 and direct the water away from the lower mine workings where contaminants are entrained in the water, and decrease the flow of contaminated water discharging from the Level 1 adit.

The major components of Alternative 7 include:

- Rehabilitation of the Level 3 portal and adit to facilitate construction activities.
- Removal of debris in the adit, including timbers, pipe, mining waste, and rock piles.
- Cleaning of the adit floor.
- Installing ventilation and communication systems.
- Re-collaring of the raises.
- Construction of polyurethane foam bulkheads in three raises.
- Pressure grout and/or shotcrete potential zones along the fault or in fractured rock on the adit floor.
- Flowable fill placement on the floor of Level 3.
- Channelization of Level 3 drainage to Level 1.

The benefits of Alternative 7 include the following.

- Water that flows into the Level 3 tunnel would be directed away from locations where it could contact contaminating materials and be discharged from the Level 3 portal.
- The reduced flow of water to lower mine levels would reduce the Level 1 adit discharge flow rate and the metal load to Elk Creek.
- Preventing water from contacting the contaminating materials between Level 3 and Level 1 may result in lower contaminant concentrations in the Level 1 adit discharge.
- The decreased loading of metals to Elk Creek may allow surface water ARARs to be met in Elk Creek.
- If water treatment is still needed to meet surface water ARARs, the “cleaner” water discharged at Level 3 could be segregated from the more contaminated water discharging from Level 1. If only the Level 1 adit discharge requires treatment, the design flow for the water treatment system could be reduced, thus reducing system size and capital and O&M costs.
- A channel that conveys the water from the Level 3 portal to Level 1 is part of the design, so if the Level 3 discharge requires treatment, the means to consolidate water for treatment at Level 1 is in place.
- Reducing the flow of water through the most highly contaminated portions of the mine will likely improve downgradient groundwater quality.

Significant issues associated with Alternative 7 include the following.

- The analysis does not address the issue of long-term flow. If some portion of the adit back caves along the drift and creates a dam or if new fractures develop, water would most likely pool behind the collapse. This pool could potentially drain through the workings toward Level 1.
- A large stope and shaft have been identified by DRMS on Level 3 (DRMS 2009). Spalling rock from the stope or loose rock from the partially obstructed shaft may fall onto the flowable fill floor, which could act as a dam.

- Grading to control the gradient of the flowable fill to promote positive drainage out of Level 3 would be difficult. It is possible that water would pond on the flowable fill at locations along the drift.
- The pressure grouting technique employs a pump that forces grout at a high pressure into the majority of fractures in the ground in an effort to seal additional pathways for seeping water. The grouting pressure must be closely monitored so the fractures are not opened any farther than necessary for grouting.
- Water discharged from Level 3 may require treatment. It has been assumed that the water would be conveyed to Level 1 through a lined channel, where it would be released into Elk Creek. Monitoring of the water quality would be undertaken to determine if treatment is necessary or if the water can be released directly into Elk Creek.

Overall Protection of Human Health and Environment

Protection would be achieved by preventing water that enters the mine workings from Level 3 and above from contacting highly mineralized materials that are present between Level 3 and Level 1. Studies indicate that the water captured and discharged from Level 3 would contain lower concentrations of metal contaminants than are currently discharged from Level 1 (USGS 2007; USGS 2009). Only water that currently enters the mine workings from below Level 3 would contact the highly mineralized materials. The Level 1 adit discharge flow rate would decrease and metal concentrations in the discharge may decrease as well since a lower percentage of the water would have flowed past all of the available contaminant sources. The net metal loading to Elk Creek would be reduced.

This alternative addresses the surface water and groundwater RAOs. It does not address the soil RAO.

Compliance with ARARs

Surface Water Quality – The degree to which Alternative 7 would improve water quality in Elk Creek to the extent that most or all WQS are met in Elk Creek is unknown. The alternative would reduce the flow of water through the most contaminating portions of the mine, reducing the total loading of metals to Elk Creek. The reduction in flow and improvement in the quality of water that discharges from the Level 1 adit is uncertain. Based on metal concentrations measured within the Level 3 adit (USGS 2007; USGS 2009), water that would be discharged from Level 3 is expected to be significantly less contaminated than water discharged from the Level 1 adit but higher than WQS.

Protection of Wetlands and Floodplains – The channel that conveys water from Level 3 to Level 1 would be constructed away from existing wetlands or would leave an equivalent wetland area after construction as existed prior to construction. Additional wetlands may develop along the channel that conveys water from Level 3 to Level 1.

Soil and Hazardous Waste - Alternative 7 would be constructed such that waste is left in the mine workings where feasible. Waste removed from Level 3 would be managed in accordance with solid and hazardous waste regulations.

Air – If necessary, dust suppression would be used during construction. The process should not generate odors.

Fish and Wildlife – Site activities would be coordinated with natural resource trustees to ensure the system poses no threats to protected species.

Noise Control – Construction would not occur near population centers. The system is not expected to produce noise in the long term.

Long-Term Effectiveness and Permanence

Alternative 7 would provide long-term reduction in the flow of metals from the site by preventing water that enters the mine workings from Level 3 and above from contacting the highly mineralized materials that are present between Level 3 and Level 1. This would likely decrease the flow rate of the Level 1 adit discharge and thereby decrease the net loading of metal contaminants to Elk Creek.

Long-term effectiveness is dependent on the ability to direct water flow out of Level 3 via the portal and prevent water from flowing to lower levels of the mine. The following factors could affect the long-term effectiveness and performance of Alternative 7.

- Long-term integrity of foam and flowable fill.
- Low pH water may cause damage to flowable fill leading to water seeping into lower levels of the mine workings.
- Channelized flow resulting in excessive erosion.
- Ice damming during cold weather events resulting in the blockage of discharge at Level 3.
- Maintenance would be required to make certain the Level 3 adit continues to discharge properly. Potential maintenance could include road repairs, re-application of shotcrete, replacement of flowable fill in disturbed areas, cleanout of the surface channel, and periodic adit rehabilitation.
- System failure could result in release of water through the mine workings resulting in an increase in contaminated water discharged from the Level 1 adit. To protect against this, the Level 1 and Level 3 adit discharge flow rates would be monitored regularly.

Alternative 7 primarily reduces the volume of water that flows through the most highly contaminated portion of the mine workings and reduces the loading of contaminants to groundwater and Elk Creek. Residual risks that are not addressed by this alternative include the following.

- Water that enters Level 3 may have been exposed to mineralized materials and exhibit elevated contaminant levels.
- New seepage paths that convey water to other levels of the mine workings may develop.
- Water entering the mine workings through other pathways would still come in contact with source contaminants and discharge at Level 1, which would continue to impact Elk Creek after the alternative is implemented. The magnitude of the loading to Elk Creek is not known because the fraction of water that enters the mine at and above Level 3 is unknown.
- Risk to human and environmental receptors from waste rock at Levels 5 and 98 would not be addressed.
- Risks to aquatic and other environmental receptors from adit discharges at Levels 2, 3, 5, and 98 would not be addressed.

Reduction of Toxicity, Mobility, and Volume through Treatment

Alternative 7 would not provide treatment per se, but it could reduce the volume of water that flows through highly mineralized portions of the mine workings and discharges at Level 1. Sulfide oxidation would be reduced by decreasing the volume of water that flows through highly mineralized zones in the workings between Levels 3 and 1. A portion of the water that currently discharges from Level 1 would be discharged from the Level 3 portal. Metal concentrations in the water would likely be lower than currently observed in the Level 1 discharge, resulting in an overall decrease in metal loading to Elk Creek and downstream waters and lower toxicity to aquatic organisms and other environmental receptors.

Short-Term Effectiveness

Due to the location of the project site and type of construction activities, the short-term risk to the community is expected to be low. Potential risks to on-site workers are associated with operation of machinery, confined space work within the adit, potential exposure to contaminated materials within the mine workings, high elevation work, and work conducted adjacent to steep mountainous slopes. These risks are expected to be moderate with the implementation of mitigation measures to include appropriate management, construction, health and safety, and security procedures and controls.

The RAOs addressed by this alternative could be achieved in a moderate timeframe. The collection and discharge of water at Level 3 would be immediate upon implementation of this alternative. The reduction in Level 1 adit discharge would be delayed as water drains through the mine workings and a new base flow is established. If Alternative 7 is implemented with an associated water treatment system (not included in this alternative), the RAOs would be achieved quickly.

Other environmental impacts that could result from the implementation of this treatment alternative include the following.

- Increase in concentrated flows from Level 3 could result in irregular flow and erosion.
- Potential development of new wetland areas due to the buildup of debris or sediment where gradients are not steep enough.
- Slope stability issues related to the concentration of flows and saturation of soils on steep slopes.

Implementability

The construction of the major components of this alternative may require specialized construction equipment and labor. The major components of this alternative include nonstandard materials, which are expected to be somewhat reliable. Lead time may be needed in delivery of the equipment and materials. Operation is expected to include regular inspections of the Level 3 floor and adit discharge and standard repairs and cleaning. Specialized labor that is not locally available may be required.

The ability to construct this alternative could be limited by adverse weather conditions, uneven terrain, limited construction season, and local availability of qualified labor.

Monitoring the effectiveness of this alternative would be easy.

Agency approval of this alternative is expected to be related to the water quality at the discharge location on Elk Creek. Local, state, and federal agencies may have a difference of opinion on the allowable metals concentrations of the water discharged to Elk Creek. Operations and maintenance would likely occur through the life of this alternative, which could be as much as 30 years or longer. Approval of this alternative could be affected by the long-term O&M responsibilities and the impact to the agency or agencies responsible for O&M.

Additional remedial actions may be necessary to address all of the RAOs. This alternative offers the flexibility of implementing additional remedial actions. Remedial actions that would address those RAOs not met by this alternative could be implemented in series with, or parallel to, this alternative. Alternatives that include work inside or outside the mine workings could be implemented any time before, during or after this alternative is implemented.

This alternative could be reversed by removing flowable fill on the floor of the Level 3 adit and re-opening sealed raises to re-establish flow through the mine workings. Reversing this alternative would be difficult and would require a relatively high level of effort.

Cost

The cost categories for construction capital of this alternative include road improvement, portal rehabilitation, adit rehabilitation, polyurethane foam fill for raises, flowable fill, polyurethane foam fill for Level 4 shaft, and Level 3 discharge channelization. A contingency was included for unlisted items, design (scope) contingency, project management, remedial design, construction management, mobilization and general construction requirements, and construction (bid) contingency. The engineer's preliminary opinion of probable capital cost for this alternative is provided in Table A-16 in Appendix B.

O&M and periodic costs were estimated over a 30-year period. O&M cost categories associated with this alternative include annual monitoring, shotcrete re-application, replacement of flowable fill in disturbed areas, and channel cleanout. Contingencies for construction (bid) contingency, project management, and technical support are also included. The engineer's preliminary opinion of probable O&M costs for this alternative for 1 year and over a 30-year period are provided in Tables A-17 and A-18 in Appendix B, respectively.

Periodic cost categories associated with this alternative include 5-year reviews along with road maintenance and adit rehabilitation every 10 years. Associated contingencies for construction (bid) contingency, project management, and technical support are also included. The engineer's preliminary opinion of periodic cost of this alternative is provided in Table A-19 in Appendix B.

A present value analysis was conducted on all of the costs developed following EPA guidance (EPA 2000b) and considering a discount rate of 7 percent. The engineer's preliminary opinion of present value cost of this alternative is provided in Table A-20 in Appendix B. Estimated current dollar costs are summarized below.

Estimated Costs Alternative 7 – Flowable Fill in Level 3	
Construction Costs	$1,822,300
O&M and Periodic Costs	$1,002,300
Net Present Value, 30-year period of performance	$2,185,100

5.2.8 Alternative 8 – Horizontal Drains in Level 3

Alternative 8 involves installing a series of sub-horizontal drains within Level 3 to promote drainage into the adit where it can be collected and discharged (Figure 4-16). The wells would aid in dewatering the surrounding bedrock and reduce the amount of water that becomes contaminated as it flows through the mine workings, thus reducing the loading of contaminants to Elk Creek.

The major components of Alternative 8 include the following.

- Rehabilitation of Level 3 to a similar degree as described in Alternative 7.
- Re-collaring the raises.
- Drilling of sub-horizontal drains within Level 3.
- A casing and piping system to remove water collected by the sub-horizontal drains from Level 3.

The benefits of Alternative 8 include the following.

- Groundwater would be diverted away from locations where it would flow into the Standard Mine workings where it contacts contaminating materials.
- The reduced flow would reduce the Level 1 adit discharge flow rate and the metal load to Elk Creek.
- The decreased loading of metals to Elk Creek may allow surface water ARARs to be met in Elk Creek.
- If water treatment is still needed to meet surface water ARARs, reducing the flow into the mine workings would decrease the required design flow for the water treatment system, thus reducing system size and capital and O&M costs.
- Reducing the flow of water through the mine will likely improve downgradient groundwater quality.

Significant issues associated with Alternative 8 include the following.

- The quality of groundwater collected from the surrounding formations of Level 3 is unknown and would require monitoring to determine if treatment is required. The water is expected to contain a limited amount of site contaminants.
- If treatment is required the collected water would require conveyance to a treatment facility.
- The horizontal drains will only collect groundwater that is encountered along the alignment of the drain. Additional pathways for groundwater flow into Level 3 are possible and would need to be addressed by other means.

Overall Protection of Human Health and Environment

Protection would be achieved by reducing flow through the mine workings. Reducing flow through the workings would decrease water interaction with contaminating materials thereby decreasing metals loading to Elk Creek. The magnitude of the load reduction is

not known. The quality of groundwater in the vicinity of Level 3 has been assumed to permit discharge of untreated water into Elk Creek.

This alternative addresses the surface water and groundwater RAOs. It does not address the soil RAO.

Compliance with ARARs

Surface Water Quality – The degree to which Alternative 8 would improve water quality in Elk Creek to the extent that most or all WQS are met in Elk Creek is unknown. The alternative would reduce the flow of groundwater through the most contaminating portions of the mine, likely reducing the total loading of metals to Elk Creek. The reduction in flow and improvement in the quality of water that discharges from the Level 1 adit is uncertain. Based on metal concentrations measured in water flowing into the Level 3 adit, the water collected from the drains is expected to be significantly less contaminated than water discharged from the Level 1 adit.

Protection of Wetlands and Floodplains – Alternative 8 should not impact wetlands or the floodplain. Wetlands may develop along the discharge channel that conveys the collected water to Elk Creek.

Soil and Hazardous Waste - Alternative 8 would be constructed such that waste is left in the mine workings. If waste is removed from Level 3, it would be managed in accordance with solid and hazardous waste regulations.

Air – If necessary, dust suppression would be used during construction. The process should not generate odors.

Fish and Wildlife – Site activities would be coordinated with natural resource trustees to ensure that the system poses no threats to protected species.

Noise Control – Construction would not occur near population centers. The system is not expected to produce noise in the long term.

Long-Term Effectiveness and Permanence

Alternative 8 would provide long-term reduction in the volume of water that enters the mine workings and contacts the highly mineralized materials that are present between Level 3 and Level 1. This would decrease the flow rate of the Level 1 adit discharge and decrease the net loading of metal contaminants to Elk Creek.

The following factors could affect the long-term effectiveness and performance of Alternative 8.

- Vandalism at the discharge point could compromise the operation of the system resulting in seepage into lower levels of the mine workings.
- Development of an ice dam within the discharge pipe during cold weather could result in the blockage, reducing the efficiency of the system.
- Annual maintenance would be required to make certain the horizontal drains and the ancillary pipe network discharge properly. Potential maintenance issues could include pipe and valve repairs and channel cleanout and repairs.
- System failure could result in release of water through the mine workings resulting in an increase in contaminated water discharged from the Level 1 adit.

This alternative primarily reduces the volume of water that flows through the most highly contaminated portion of the mine workings and reduces the loading of contaminants to groundwater and Elk Creek. Residual risks that are not addressed by this alternative include the following.

- Water that enters Level 3 may have been exposed to mineralized materials and may exhibit elevated contaminant levels.
- Water entering the mine workings through other pathways would still come in contact with source contaminants and discharge at Level 1, which would continue to impact Elk Creek after the alternative is implemented. The magnitude of the loading to Elk Creek is not known because the fraction of water that enters the mine at and above Level 3 is unknown.
- Flow through the workings would not be addressed beyond collection of groundwater via the horizontal drains. Water in Level 3 would still be allowed to flow through the workings to Level 1.
- Risk to human and environmental receptors from waste rock at Levels 5 and 98 would not be addressed.
- Risks to aquatic and other environmental receptors from adit discharges at Levels 2, 3, 5, and 98 would not be addressed.

Reduction of Toxicity, Mobility, and Volume Through Treatment

Alternative 8 would not provide treatment per se, but it could reduce the volume of water that flows through highly mineralized portions of the mine workings and discharges at Level 1. Sulfide oxidation would be reduced by decreasing the volume of water that flows through highly mineralized zones in the workings between Levels 3 and 1. A portion of the water that currently discharges from Level 1 would be discharged from the water collection system. Metal concentrations in the water would likely be significantly lower than currently observed in the Level 1 discharge, resulting in an overall decrease in metal loading to Elk Creek and downstream waters and lower toxicity to aquatic organisms and other environmental receptors.

Short-Term Effectiveness

Due to the location of the project site and type of construction activities, the short-term risk to the community is expected to be low. Potential risk to on-site workers is associated with operation of machinery, confined space work within the adit, potential exposure to contaminated materials within the mine workings, high elevation work, and work conducted adjacent to steep mountainous slopes. These risks are expected to be moderate with the implementation of mitigation measures to include appropriate management, construction, health and safety, and security procedures and controls.

The RAOs addressed by this alternative could be achieved in a moderate timeframe. The collection and discharge of groundwater at Level 3 would be immediate upon implementation of this alternative. The reduction in Level 1 adit discharge would be delayed as water continues to drain through the workings and a new base flow is established. Adit discharge with high cadmium, copper, lead, manganese, and zinc concentrations may require treatment (not included in this alternative), which could result in immediate achievement of the RAOs.

Other environmental impacts that could result from the implementation of this treatment alternative include the following.

- Increase in concentrated flows from Level 3 resulting in irregular flow and erosion.
- Potential development of new wetland areas.
- Slope stability issues related to the concentration and saturation of flows.

Implementability

Specialized construction equipment and labor would be required for construction. Lead time may be needed in delivery of the equipment and materials required to implement this alternative. Operation is expected to include regular inspections of piping and discharge channels. O&M of the system described by this alternative is expected to be limited to inspections and standard repairs and cleaning. Specialized labor would be required and may not be locally available.

The ability to construct this alternative could be limited by adverse weather conditions, uneven terrain, limited construction season, and local availability of qualified labor.

Monitoring the effectiveness of this alternative would be relatively easy.

Agency approval of this alternative is expected to be related to the water quality at the discharge location on Elk Creek. Local, state, and federal agencies may have a difference of opinion on the allowable metals concentrations of the water discharged to Elk Creek. Agreement between agencies on the upper limit of metals concentrations allowable in the discharged water may impact approval of this alternative. Operations and maintenance would likely occur through the life of this alternative, which could be as much as 30 years or longer. Approval of this alternative could be affected by the long-term O&M responsibilities and the impact to the agency or agencies responsible for O&M.

Additional remedial actions may be necessary to address all of the RAOs. Remedial actions that would address those RAOs not met by this alternative could be implemented in series with, or parallel to, this alternative. Alternatives that include work inside or outside the mine workings could be implemented any time before, during or after this alternative is implemented.

This alternative could be reversed by removing the pipe network and sealing horizontal drains with grout. Reversing this alternative would be difficult and would require a moderate level of effort.

Cost

The cost categories for construction capital of this alternative include road improvement, portal rehabilitation, adit rehabilitation, horizontal drain system, and Level 3 discharge channelization. A contingency was included for unlisted items, design (scope) contingency, project management, remedial design, construction management, mobilization and general construction requirements, and construction (bid) contingency. The engineer's preliminary opinion of probable capital cost for this alternative is provided in Table A-21 in Appendix B.

O&M and periodic costs were estimated over a 30-year period. O&M cost categories for this alternative include annual monitoring and remedy maintenance. Contingencies for construction (bid) contingency, project management, and technical support were also included. The engineer's preliminary opinion of probable O&M costs for this alternative

for 1 year and over a 30-year period are provided in Tables A-22 and A-23 in Appendix B, respectively.

Periodic cost categories for this alternative include 5-year reviews along with road maintenance, equipment upgrade, replacement, and repair, and adit rehabilitation every 10 years. Associated contingencies for construction (bid) contingency, project management, and technical support were also included. The engineer's preliminary opinion of periodic cost of this alternative are provided in Table A-24 in Appendix B.

A present value analysis was conducted on all of the costs developed following EPA guidance (EPA 2000b) and considering a discount rate of 7 percent. The engineer's preliminary opinion of present value cost of this alternative is provided as Table A-25 in Appendix B. Estimated current dollar costs are summarized below.

Estimated Costs **Alternative 8 – Horizontal Drains in Level 3**	
Construction Costs	$2,257,100
O&M and Periodic Costs	$875,400
Net Present Value, 30-year period of performance	$2,558,300

5.2.9 Alternative 9 – Surficial Extraction Wells

Alternative 9 consists of installing a series of extraction wells at the ground surface in the vicinity of the underground mine workings. The purpose of the wells would be to intercept and extract groundwater before it is able to enter the mine workings. Water from the extraction wells would be collected and conveyed to a treatment facility or discharged into Elk Creek below Level 1 (Figures 4-17 and 4-18).

Two scenarios were considered for surficial extraction wells including horizontal and vertical wells. These scenarios are defined as Alternatives 9A and 9B, respectively. These two alternatives were identified to provide a comparison of implementing either or both alternatives.

Since Alternatives 9A and 9B would be implemented to achieve the same objective, assessments have been conducted together. The differences between Alternatives 9A and 9B are in the configuration of the extraction well and associated equipment (i.e., horizontal versus vertical wells). Assessments that would differ between the two alternatives are discussed separately. Separate costs were developed for each alternative.

The major components for Alternatives 9A and 9B include the following.

- Site preparation including access roads and drilling pads.
- Installation of extraction wells, horizontally for Alternative 9A and vertically for Alternative 9B.
- Alternative 9A would require installation of power supply system and submersible pumps. The horizontal wells in Alternative 9B would be designed to gravity drain.
- Construction of a piping system to convey water collected by the extraction wells to Elk Creek at a location below Level 1.

The benefits of Alternative 9 include the following.

- Groundwater would be diverted away from locations where it would flow into the Standard Mine workings where it contacts contaminating materials.
- The reduced flow would reduce the Level 1 adit discharge flow rate and the metal load to Elk Creek.
- The decreased loading of metals to Elk Creek may allow surface water ARARs to be met in Elk Creek.
- Reducing the flow of water through the mine will likely improve downgradient groundwater quality.
- If water treatment is still needed to meet surface water ARARs, reducing the flow into the mine workings would decrease the required design flow for the water treatment system, thus reducing system size and capital and O&M costs.

Significant issues associated with Alternatives 9A and 9B include the following.

- The quality of groundwater collected from the surrounding formations between Level 3 and Level 5 is unknown and would need to be monitored to determine if treatment is required. The water is expected to contain limited contaminants and be suitable for discharge to Elk Creek.
- Water requiring treatment would need to be conveyed to a treatment facility.
- Extraction wells would only collect groundwater that is encountered along the alignment of the drill hole. Groundwater could follow pathways that are not intersected by the wells and enter the mine workings.
- The vertical extraction wells for Alternative 9B would require additional annual operational and maintenance costs to maintain the power supply system and submersible pumps.

Overall Protection of Human Health and Environment

Protection would be achieved by reducing the flow of water through the mine workings where it would interact with contaminating materials. The reduction of flow through the most highly contaminating portions of the mine would decrease the flow rate of water being discharged at Level 1 and net metals loading to Elk Creek, thus reducing risks to aquatic and other environmental receptors.

This alternative addresses the surface water and groundwater RAOs. It does not address the soil RAO.

Compliance with ARARs

Surface Water Quality – The degree to which Alternative 9 would improve water quality in Elk Creek to the extent that most or all WQS are met in Elk Creek is unknown. The alternative would reduce the flow of groundwater through the mine, thereby reducing the total loading of metals to Elk Creek. Based on metal concentrations measured in water flowing into the Level 3 adit (USGS 2007; USGS 2009), water discharged from the wells is expected to be significantly less contaminated that water discharged from the Level 1 adit.

Protection of Wetlands and Floodplains – Alternative 9 would be constructed to minimize the area of wetland disturbance. Additional wetlands may develop along the discharge channels that convey the collected water to Elk Creek.

Soil and Hazardous Waste – Waste generated during drilling would be managed in accordance with solid and hazardous waste regulations.

Air – Dust suppression would be used during construction. The system should not generate odors.

Fish and Wildlife – Site activities would be coordinated with natural resource trustees to ensure the system poses no threats to protected species.

Noise Control – Construction would not occur near population centers. The system is not expected to produce noise in the long term.

Long-Term Effectiveness and Permanence

Either Alternative 9A or 9B would provide a permanent method for long-term extraction of groundwater in an area surrounding the mine workings. Long-term effectiveness would be achieved by collecting and discharging groundwater in the vicinity of the mine workings, which is expected to reduce flow through the mine workings and loading to Elk Creek.

The following factors could affect the long-term effectiveness and performance of Alternatives 9A and 9B.

- Submersible pumps may not be reliable and could require continued maintenance and repair (Alternative 9B).
- Vandalism at the collection point could compromise the operation of the system resulting in seepage into lower levels of the mine workings.
- Ice damming or blockage within the collection pipe during cold weather events could result in the continued seepage of water into the mine workings.
- Annual maintenance would be required to make certain the extraction wells are functioning properly. Potential maintenance issues include pipe and valve repairs and channel cleanout and repairs.
- System failure could result in groundwater seepage into the mine workings resulting in an increase in contaminated water discharged from the Level 1 adit.

This alternative primarily reduces the volume of water that flows through the most highly contaminated portion of the mine workings and reduces the loading of contaminants to groundwater and Elk Creek. Residual risks that are not addressed by this alternative include the following.

- Water entering the mine workings through other pathways would still come in contact with source contaminants and discharge at Level 1, which would continue to impact Elk Creek after the alternative is implemented. The magnitude of the loading to Elk Creek is not known because the fraction of water that would be intercepted by the wells is unknown.
- Flow through the workings would be reduced but not eliminated. Water that enters the mine from other pathways would still be allowed to flow through the workings to Level 1 where it would be discharged to Elk Creek.
- Contaminated water would continue to discharge out of Level 1 and/or other levels of the mine.
- Risk to human and environmental receptors from waste rock at Levels 5 and 98 would not be addressed.
- Risks to aquatic and other environmental receptors from adit discharges at Levels 2, 3, 5, and 98 would not be addressed.

Reduction of Toxicity, Mobility, and Volume through Treatment

Alternatives 9A and 9B would not provide treatment per se, but could reduce the volume of water that flows through highly mineralized portions of the mine workings and discharges at Level 1. Sulfide oxidation would be reduced by decreasing the volume of water that flows through highly mineralized zones in the workings between Levels 3 and 1. A portion of the water that currently discharges from Level 1 would be discharged from the water collection system. Metal concentrations in the water would likely be significantly lower than currently observed in the Level 1 discharge, resulting in an overall decrease in metal loading to Elk Creek and downstream waters and lower toxicity to aquatic organisms and other environmental receptors.

Short-Term Effectiveness

Due to the location of the project site and type of construction activities, the short-term risk to the community is expected to be low. Potential risks to on-site workers are associated with operation of machinery and work conducted adjacent to steep mountainous slopes. These risks are expected to be moderate with the implementation of mitigation measures to include appropriate management, construction, health and safety, and security procedures and controls.

The RAOs addressed by this alternative could be achieved in a moderate timeframe. The collection and discharge of groundwater around the mine workings would be immediate upon implementation of this alternative. The reduction in Level 1 adit discharge would be delayed as water continues to drain through the workings and a new base flow is established.

Other environmental impacts that could result from the implementation of this treatment alternative include:

- Dewatering of the upper Elk Creek basin aquifer.
- Potential impacts to existing wetlands.
- Potential increase in water discharged upstream in Elk Creek
- Visual aesthetics of piping and ancillary structures required to collect and convey water
- Potential loss/displacement of wildlife as a result of the changes in water reporting to Elk Creek.
- Potential increase in concentrated flows from release of extracted water resulting in irregular flow and erosion.
- Slope stability issues related to the concentration and saturation of flows.

Implementability

The construction of the major components of this alternative would require specialized construction equipment and labor and would require a moderate level of effort to complete. Specialized labor may not be locally available. Lead time may be needed for delivery of the necessary equipment and materials. Operation is expected to include regular inspections of piping and discharge channels. O&M of the system described by this alternative is expected to be limited to inspections, standard repairs, and cleaning, but specialized labor may be required.

The ability to construct this alternative could be limited by adverse weather conditions, uneven terrain, limited construction season, and local availability of qualified labor.

Monitoring the effectiveness of this alternative would be relatively easy.

Agency approval of this alternative is expected to be related to the water quality at the discharge location on Elk Creek. Local, state, and federal agencies may have a difference of opinion on the allowable metals concentrations of the water discharged to Elk Creek. Agreement between agencies on the upper limit of metals concentrations allowable in the discharged water may impact approval of this alternative. Operations and maintenance would likely occur through the life of this alternative, which could be as much as 30 years or longer. Approval of this alternative could be affected by the long-term O&M responsibilities and the impact to the agency or agencies responsible for O&M.

These alternatives may not address all of the RAOs. To do so, additional remedial actions may be necessary. This alternative offers the flexibility of implementing additional remedial actions. Remedial actions that would address those RAOs not met by this alternative could be implemented in series with or parallel to this alternative. Alternatives that include work inside or outside the mine workings could be implemented any time before, during, or after this alternative is implemented.

This alternative could be reversed by removing pipe network, ancillary structures, and sealing extraction wells with grout. Reversing this alternative would be take a relatively large level of effort.

Cost

The cost categories for construction capital of Alternative 9A include road improvement, drill pad construction, and horizontal extraction well installation. The number and depth of wells needed to implement the remedy would be determined after a hydrologic evaluation, but the costs were developed assuming 5000 linear feet would be needed. A contingency was included for unlisted items, design (scope) contingency, project management, remedial design, construction management, mobilization and general construction requirements, and construction (bid) contingency. The engineer's preliminary opinion of probable capital cost for this alternative is provided in Table A-26 in Appendix B.

O&M and periodic costs were estimated over a 30-year period. O&M cost categories for this alternative include annual monitoring and collection pipeline maintenance. Contingencies for construction (bid) contingency, project management, and technical support are also included. The engineer's preliminary opinion of probable O&M costs for this alternative for 1 year and over a 30-year period are provided as Tables A-27 and A-28 in Appendix B, respectively.

Periodic cost categories for this alternative include 5-year reviews along with road maintenance and equipment upgrade, replacement, and repair every 10 years. Associated contingencies for construction (bid) contingency, project management, and technical support are also included. The engineer's preliminary opinion of periodic cost of this alternative is provided in Table A-29 in Appendix B.

A present value analysis was conducted on all of the costs developed following EPA guidance (EPA 2000b) and considering a discount rate of 7 percent. The engineer's preliminary opinion of present value cost of this alternative is provided in Table A-30 in Appendix B. Estimated current dollar costs are summarized below.

Estimated Costs Alternative 9A – Horizontal Extraction Wells at the Surface	
Construction Costs	$1,218,200
O&M and Periodic Costs	$710,700
Net Present Value, 30-year period of performance	$1,475,600

The cost categories for construction capital of Alternative 9B include road improvement, drill pad construction, and vertical extraction well installation. The number and depth of wells needed to implement the remedy would be determined after a hydrologic evaluation, but the costs were developed assuming 5000 linear feet would be needed. A contingency was included for unlisted items, design (scope) contingency, project management, remedial design, construction management, mobilization and general construction requirements, and construction (bid) contingency. The engineer's preliminary opinion of probable capital cost for this alternative is provided in Table A-31 in Appendix B.

O&M and periodic costs were estimated over a 30-year period. O&M cost categories for this alternative include annual monitoring, collection pipeline maintenance, and submersible pump maintenance. Contingencies for construction (bid) contingency, project management, and technical support were also included. The engineer's preliminary opinion of probable O&M costs for this alternative for 1 year and over a 30-year period is provided in Tables A-32 and A-33 in Appendix B, respectively.

Periodic cost categories for this alternative include 5-year reviews along with road maintenance and equipment upgrade, replacement, and repair every 10 years. Associated contingencies for construction (bid) contingency, project management, and technical support were also included. The engineer's preliminary opinion of periodic cost of this alternative is provided in Table A-34 in Appendix B.

A present value analysis was conducted on all of the costs developed following guidance (EPA 2000b) and considering a discount rate of 7 percent. The engineer's preliminary opinion of present value cost of this alternative is provided in Table A-35 in Appendix B. Estimated current dollar costs are summarized below.

Estimated Alternative 9B – Vertical Extraction Wells at the Surface	Costs
Construction Costs	$1,766,500
O&M and Periodic Costs	$949,200
Net Present Value, 30-year period of performance	$2,119,600

5.2.10 Alternative 10 – Contamination Source Control at Level 2

Alternative 10 includes rehabilitation of the Level 2 portal and adit to provide access into the workings for removal of mine debris along with pressure grouting and capping of contaminating sources (Figures 4-19 and 4-20). Stoped areas would be filled with grout and mineralized zones and areas noticeably contributing to contamination would be pressure grouted. Shotcrete would then be placed over the ribs and floor of the Level 2 adit. The purpose of contamination source control is to limit exposure mineralized materials to air and water, which would decrease the metal loading of waters flowing down to Level 1 or out of the Level 2 portal. Preventing additional interaction of water with mineralized materials would reduce the metal loading of waters flowing through the workings and out of Level 1 portal.

The major components of Alternative 10 include the following.

- Road improvement.
- Rehabilitating the Level 2 portal and adit to facilitate construction activities.
- Dewatering pooled water behind the collapsed Level 2 portal.
- Removing debris in the adit, including timbers, pipe, mining waste, rock piles, and clearing the adit floor.
- Removing the collapse at the northeast end of Level 2 to facilitate identification of additional contaminating sources.
- Investigating the Level 2 adit to confirm and identify additional target zones for capping and pressure grouting.
- Sealing of ore chutes and grouting of associated stoped areas.
- Pressure grouting and capping sources of contamination.
- Channelization of Level 2 drainage to Level 1.

The benefits of Alternative 10 include the following.

- Water that flows into the Level 2 tunnel would be directed away from locations where it could contact additional contaminating materials and would be discharged from the Level 2 portal.
- The reduced flow through the workings would reduce the Level 1 adit discharge flow rate and the metal load to Elk Creek.
- Preventing water from contacting the contaminating materials between Level 2 and Level 1 may result in somewhat lower contaminant concentrations in the Level 1 adit discharge.
- The decreased loading of metals to Elk Creek may allow surface water ARARs to be met in Elk Creek.
- A channel that conveys the water from the Level 2 portal to Level 1 is part of the design, so if the Level 2 discharge requires treatment, the means to consolidate water for treatment at Level 1 is in place.
- Reducing the flow of water through the most highly contaminated portions of the mine will likely improve downgradient groundwater quality.

Significant issues associated with Alternative 10 include the following.

- Level 2 is flooded at the portal as observed by DRMS (DRMS 2009). The adit would require draining prior to excavation and rehabilitation of Level 2.
- Level 2 was observed by DRMS to be collapsed at the northeast end of the adit (DRMS 2009). An investigation would be conducted to estimate if water is retained behind the blockage. The collapse would then be removed to facilitate inspection of the remaining portion of the drift. It has been assumed no water is pooled behind the collapse as based on DRMS observations.
- The extent to which contamination control (i.e., pressure grouting and shotcrete placement) is required has been estimated as 20 percent of the adit length, though this value may be low based on the 2009 DRMS investigation. Investigations would be conducted once access is granted into Level 2 to better estimate the extent of contamination that would require contamination control.
- Water would be allowed to flow through the workings to Level 1 as it currently does. The extent to which contamination control will improve water quality at Level 1 is unknown.

- DRMS observed 16 ore chutes (DRMS 2009). It was assumed each ore chute has associated stoping. The size of the stoped areas was assumed to be 25 feet tall by 20 feet long and 10 feet deep for cost estimating purposes. The actual volumes would need to be examined during the investigation of Level 2.
- Pressure grouting and shotcrete would be susceptible to degradation and would require maintenance to assure continued control of contamination.
- Additional monitoring of water from Level 2 may be required.
- Water from Level 2 requiring treatment would be conveyed to a treatment facility.

Overall Protection of Human Health and Environment

Protection would be achieved by controlling contaminating materials on Level 2, thus reducing the load of metals that enters Elk Creek.

This alternative partially addresses the surface water and groundwater RAOs by reducing contact with contaminated materials within the mine and thus decreasing the metal loading of waters that flow from Level 2 to Level 1 or out of the Level 2 portal. This alternative does not address the soil and remaining surface water and groundwater RAOs. It does not eliminate the flow of water through the mine workings or discharge of contaminated water from the Level 1 adit.

Compliance with ARARs

Surface Water Quality – The degree to which Alternative 10 would improve water quality in Elk Creek to the extent that most or all WQS are met in Elk Creek is unknown. The alternative would reduce but not eliminate contact between the water in the mine and the contaminated surfaces, likely reducing the total loading of metals to Elk Creek. The improvement in the quality of water that discharges from the Level 1 adit is uncertain.

Protection of Wetlands and Floodplains – The channel that conveys water from Level 3 to Level 1 would be constructed away from existing wetlands or would leave an equivalent wetland area after construction as existed prior to construction. Additional wetlands may develop along the channel that conveys water from Level 2 to Level 1.

Soil and Hazardous Waste - Alternative 10 would be constructed such that waste is left in the mine workings where possible. Waste that is removed from Level 2 would be managed in accordance with solid and hazardous waste regulations.

Air – Dust suppression would be used during construction. The process should not generate odors.

Fish and Wildlife – Construction of this alternative should not negatively impact fish and wildlife. Site activities would be coordinated with natural resource trustees to ensure the system poses no threats to protected species.

Noise Control – Construction would not occur near population centers. The system is not expected to produce noise in the long term.

Long-term Effectiveness and Permanence

Long-term effectiveness would be achieved by providing a barrier between source contaminants and water flowing through the mine workings, which is expected to reduce

the metals loading to Elk Creek from the Level 1 adit. The controls described herein would be subject to degradation that may require reapplication. Additional zones may develop that would also require some measure of control.

The following factors could affect the long-term effectiveness and performance of Alternative 10.

- Quality of the construction materials used in the construction of the barrier.
- Low pH water may cause damage to barriers, which could lead to water contacting source contaminants.
- Annual maintenance would be required to make certain the barriers continue to isolate source contaminants. Potential maintenance issues include repair or replacement of barrier materials.
- System failure could result in water flowing through the mine workings contacting source contaminants resulting in an increase in metals and sediment loading from the Level 1 adit discharge.

This alternative primarily reduces contact between water that enters Level 2 and the most highly contaminated portions of Level 2, thus reducing the loading of contaminants to Elk Creek from the Level 1 adit discharge. Residual risks that are not addressed by this alternative include the following.

- Water would still become contaminated within the Level 3 workings and flow paths from Level 3 to Level 2 and from Level 2 to Level 1. The contaminated water would be discharged at Level 1 and continue to impact Elk Creek after the alternative is implemented. The magnitude of the loading to Elk Creek is not known because the portion of contaminants that enters the water within Level 2 is unknown.
- Transport of contaminants to the groundwater system could continue.
- Mobilization of contaminants from within the mine workings would be reduced but not eliminated.
- Risk to human and environmental receptors from waste rock at Levels 5 and 98 would not be addressed.
- Risks to aquatic and other environmental receptors from adit discharges at Levels 2, 3, 5, and 98 would not be addressed.

Reduction of Toxicity, Mobility, and Volume through Treatment

Alternative 10 may reduce the mobility of metals present in the contaminating materials in the Level 2 workings but would not reduce mobilization of metals from other portions of the mine workings.

Short-term Effectiveness

Due to the location of the project site and type of construction activities, the short-term risk to the community is expected to be low. Potential risks to on-site workers are associated with operation of machinery, confined space work within the adit, potential exposure to contaminated materials within the mine workings, high elevation work, and work conducted adjacent to steep mountainous slopes. These risks are expected to be moderate with the implementation of mitigation measures to include appropriate management, construction, health and safety, and security procedures and controls.

The RAOs addressed by this alternative could be achieved in relatively short time. Once controls are implemented, the metals loading at Level 1 is expected to decrease. The reduction in Level 1 adit discharge metal concentrations would be delayed as water continues to drain through the workings.

Other environmental impacts that could result from the implementation of this alternative include the following.

Increase in concentrated flows from Level 2 could result in irregular flow and erosion.

- Potential development of new wetland areas due to the buildup of debris or sediment where gradients are not steep enough.
- Slope stability issues related to the concentration of flows and saturation of soils on steep slopes.

Implementability

The construction of the major components of this alternative may require specialized construction equipment and labor, and may require a high level of effort to complete. This alternative includes the use of standard of practice equipment and materials; however, lead time may be needed for delivery. Operation is expected to include regular inspections of source contaminant barriers. O&M of the system is expected to be limited to inspections and standard repairs and cleaning. Specialized labor is expected to be required and may not be locally available.

Due to the limited ability to identify and access sources, source barriers are expected to be somewhat reliable. Shotcrete is susceptible to scaling and cracking; as a barrier it may be somewhat unreliable.

The ability to construct this alternative could be limited by adverse weather conditions, uneven terrain, limited construction season, and local availability of qualified labor.

Samples needed to monitor the effectiveness of this alternative could easily be obtained from the surface via collection points within Elk Creek and the Level 1 and Level 2 portals.

Agency approval of this alternative is expected to be related to the water quality at the discharge location into Elk Creek and long-term operations and maintenance. Local, state, and federal agencies may have a difference of opinion on the permissible metal concentrations in the water discharged to Elk Creek. Operations and maintenance would likely occur through the life of this alternative, which could be as much as 30 years or longer. Approval of this alternative could be affected by the long-term O&M responsibilities and the impact to the agency or agencies responsible for O&M.

Additional remedial actions may be necessary to address all of the RAOs. Remedial actions that would address those RAOs not met by this alternative could be implemented in series with or parallel to this alternative. This alternative offers the flexibility of implementing additional remedial actions and alternatives that include work inside or outside the mine workings could be implemented any time before, during or after this alternative is implemented.

This alternative would be difficult to reverse. Shotcrete could be removed with a moderate level of effort. The pressure grouted areas would be difficult to remove. These

areas would have to be excavated and support structures constructed to stabilize the areas of excavation, which would require maintenance to ensure stability of the adit. It would be moderately difficult to direct flow back through the workings. A bulkhead (similar to Alternative 5) would need to be constructed to impede flow out of the portal.

Cost

The cost categories for construction capital of this alternative include road improvement, dewatering behind Level 2 portal, portal rehabilitation, adit rehabilitation, blockage removal and reinforcement at northeast end of Level 2, Level 2 investigation, grouting of stoped areas above ore chutes, pressure grouting contamination sources, and Level 2 discharge channelization. A contingency was included for unlisted items, design (scope) contingency, project management, remedial design, construction management, mobilization and general construction requirements, and construction (bid) contingency. The engineer's preliminary opinion of probable capital cost for this alternative is provided in Table A-36 in Appendix B.

O&M and periodic costs were estimated over a 30-year period. O&M cost categories for this alternative include annual monitoring and remedy maintenance. Contingencies for construction (bid) contingency, project management, and technical support were also included. The engineer's preliminary opinion of probable O&M costs for this alternative for 1 year and over a 30-year period are provided in Tables A-37 and A-38 in Appendix B, respectively.

Periodic cost categories for this alternative include 5-year reviews along with road maintenance and adit rehabilitation every 10 years. Associated contingencies for construction (bid) contingency, project management, and technical support were also included. The engineer's preliminary opinion of periodic costs for this alternative are provided in Table A-39 in Appendix B.

A present value analysis was conducted on all of the costs developed following EPA guidance (EPA 2000b) and considering a discount rate of 7 percent. The engineer's preliminary opinion of the present value costs for this alternative are provided in Table A-40 in Appendix B. Estimated current dollar costs are summarized below.

Estimated Costs Alternative 10 – Contamination Source Control at Level 2	
Construction Costs	$7,905,700
O&M and Periodic Costs	$1,092,000
Net Present Value, 30-year period of performance	$8,275,500

5.2.11 Alternative 11 – Soil Amendment and Revegetation

Alternative 11 consists of amending waste rock with lime, organic matter (compost), and fertilizer and revegetating the resulting soil. Surface water and adit discharges would be routed around the treated soils. The alternative would decrease the amount of water that flows through contaminated soils and transports contaminants to downstream waters and reduce interactions between human and ecological receptors and contaminated soils. The soil amendments would decrease the mobility of contaminants present in the soil and reduce the toxicity of contaminants to environmental receptors.

The major components of Alternative 11 include the following.

- Transport soil amendments to the site.
- Spread lime and fertilizer and incorporate into the waste rock to a depth of at least three feet using small-scale equipment.
- Spread compost and incorporate into the waste rock to a depth of at least one foot.
- Stabilize banks adjacent to Elk Creek using coir log.
- Seed with slender wheatgrass and a native seed mix similar to that used at Levels 1, 2, and 3 and mulch.
- Install ditches to convey adit discharge around the treated soils.
- Install erosion control features along adjacent waterways.
- Monitoring

The benefits to Alternative 11 include the following.

- The treatment would prevent acid generation in the waste rock.
- Soil amendments would reduce the toxicity of the soil to plants and allow establishment of a vegetative cover.
- The vegetative cover would decrease dust generation and direct contact between human and environmental receptors and contaminated soils.
- The vegetative cover would further immobilize metal contaminants and prevent dissolution and flow of contaminants to adjacent surface water and groundwater.
- Channeling adit discharge would prevent contact with waste rock and the resulting mobilization of metals.

Significant issues associated with Alternative 11 include the following.

- Accessing the Level 5 waste rock would be difficult and care would be required to minimize impacts to the downstream wetland.
- Residual lime or compost may become entrained in water that flows over the waste rock, resulting in higher hardness and organic content in downstream waters. This would be minimized by bank stabilization features.

Overall Protection of Human Health and Environment

Protection would be achieved by establishment of a vegetative cover over the waste rock and by directing adit discharge around waste rock to prevent additional contaminant mobilization. As a result, contaminant loading to nearby wetlands and Elk Creek would be reduced. Interaction between environmental receptors and the waste rock would also be reduced.

This alternative addresses the soil RAOs and partially addresses the surface water RAOs. It does not control or reduce flow through the mine workings or decrease the loading of metals to Elk Creek from the Level 1 adit discharge.

Compliance with ARARs

Surface Water Quality – The degree to which Alternative 11 would improve water quality in Elk Creek to the extent that most or all WQS are met in Elk Creek is unknown.

Protection of Wetlands and Floodplains – Alternative 11 would be constructed to minimize the area of wetland disturbance. Existing wetlands may be improved by the decrease in the load of metal contaminants discharged to the wetlands.

Soil and Hazardous Waste – Alternative 11 is not expected to generate solid or hazardous waste. If biosolids compost is used for the organic amendment, the substantive requirements of Colorado biosolids regulations would be addressed.

Air – Dust suppression would be used during construction. If only composted organic matter is used, the action should not generate odors.

Fish and Wildlife – Site activities would be coordinated with natural resource trustees to ensure the system poses no threats to protected species.

Noise Control – Construction would not occur near population centers. The system is not expected to produce noise in the long term.

Long-Term Effectiveness and Permanence

Alternative 11 would be a permanent method for reducing exposure to site soils and controlling water flow through the waste rock.

The following factors could affect the long-term effectiveness and performance of Alternative 11.

- Uncontrolled erosion could reduce vegetative cover.
- Drought could prevent establishment of a vegetative cover.
- Annual maintenance would be required for the first few years to make certain the vegetative cover is well established. Potential maintenance items include amendment addition, re-seeding, and erosion control.
- Slope stability issues at Level 5.
- Recreational use involving driving motorized vehicles over the treated areas could disturb the vegetation cover.
- Extreme grazing pressure could limit vegetation success.

The residual risks associated with collecting and diverting groundwater around the mine workings may include the following.

- Flow of water through the mine workings where it mobilizes metals and transports them to Elk Creek and downstream waters would not be addressed.
- The metal contaminants present in the waste rock would be left on site.

Reduction of Toxicity, Mobility, and Volume through Treatment

Lime, organic matter, and fertilizer soil amendments reduce the mobility, bioavailability, and toxicity of mine waste, thus allowing revegetation and reducing the toxicity of materials that may subsequently erode. Lime increases soil pH, providing a more hospitable growth environment for vegetation and soil organisms. The lime and organic matter chemically precipitate and/or sequester metals by complexation and sorption mechanisms within the amended soils. Contaminants that remain in soil solution are further demobilized by chemical reactions at plant root surfaces. Stabilization of contaminants decreases the net flux of metals through the plant/soil/water system leading to decreased ecological risk. Contamination will remain on site and may be eroded in the future; however, the bioavailability of contaminants will be reduced by soil treatment and the rate of erosion will be reduced by the presence of vegetation such that the eroded material will not pose an unacceptable long term risk

Short-Term Effectiveness

Due to the location of the project site and type of construction activities, the short-term risk to the community is expected to be low. Potential risks to on-site workers are associated with operation of machinery and work conducted adjacent to steep mountainous slopes. These risks are expected to be moderate with the implementation of mitigation measures to include appropriate management, construction, health and safety, and security procedures and controls.

The RAOs addressed by this alternative could be achieved in a moderate timeframe. The reduction in contaminant mobility would begin immediately, but the establishment of a vegetative cover and the corresponding reduction in risk may take several years.

Other environmental impacts that could result from the implementation of this treatment alternative include:

- The hardness and organic content of Elk Creek may increase.
- There may be short-term impacts to existing wetlands.
- Vegetation may become an attractive nuisance to wildlife.

Implementability

The construction of the major components of this alternative would require standard construction equipment and labor. Lead time may be needed in delivery of the equipment and materials required to implement this alternative. Operation is expected to include annual inspections for the first few years, then periodic inspections in future years. Specialized labor is necessary for inspections and identification of appropriate maintenance actions. O&M is expected to be limited to inspections, potential re-treatment or re-seeding of small areas, weed control, and erosion control.

The ability to construct this alternative could be limited by adverse weather conditions, uneven terrain, and the limited construction season. The short-term viability of the remedy may be limited by the short growing season.

Monitoring the effectiveness of this alternative would be relatively easy. Surface water and sediment samples may be collected from downstream wetlands and Elk Creek. Soil samples may be collected after construction to ensure the soil has adequate long-term neutralization and provides a hospitable environment for vegetation. Vegetation success would be measured by evaluation of percent cover, bare areas, and weeds.

Agency approval of this alternative is expected to be related to the location of the remaining waste rock piles relative to wetlands. The agencies may differ on the trade-off between potential short term disruption to downgradient wetlands and the long-term reduction in contaminant loading to the wetlands and downstream waters. While operations and maintenance would likely be minimal after the first few years of operation, monitoring would be required because the waste is left on site. Approval of this alternative could be affected by the long-term O&M responsibilities and the impact to the agency or agencies responsible for O&M.

This alternative does not address all of the RAOs. To do so, additional remedial actions may be necessary. Remedial actions that would address the RAOs not met by this alternative could be implemented in series with or parallel to this alternative. Any of the

other alternatives could be implemented any time before, during, or after this alternative is implemented.

This alternative could not be reversed; however, the resulting waste rock/soil could be removed and taken to an on-site or off-site repository in the unlikely event that it is determined necessary to reduce risks to human health and the environment.

Cost

The cost categories for construction capital of Alternative 11 include road improvement, amendment purchase and delivery, site preparation, spreading and mixing amendments, seeding and mulching, adit discharge ditch construction, and erosion controls. A contingency was included for unlisted items, design (scope), project management, remedial design, construction management, mobilization and general construction requirements, and construction (bid). The engineer's preliminary opinion of probable capital cost for this alternative is provided in Table A-41 in Appendix B.

O&M and periodic costs were estimated over a 30-year period. O&M cost categories for this alternative include annual monitoring for three years and triannual monitoring for subsequent years, Contingencies for construction (bid) contingency, project management, and technical support are also included. The engineer's preliminary opinion of probable O&M costs for this alternative for 1 year and over a 30-year period are provided as Tables A-42 and A-43 in Appendix B, respectively.

Periodic cost categories for this alternative include 5-year reviews along with road maintenance, re-treatment of 10 percent of the waste rock and re-seeding of 50 percent of the area in each of the first 2 years after treatment, replacement of 20 percent of the erosion control features in each of the first 2 years after treatment, and maintenance of the Level 5 and Level 98 adit discharge ditches every ten years. Associated contingencies for construction (bid), project management, and technical support are also included. The engineer's preliminary opinion of periodic cost of this alternative is provided in Table A-44 in Appendix B.

A present value analysis was conducted on all of the costs developed following EPA guidance (EPA 2000b) and considering a discount rate of 7 percent. The engineer's preliminary opinion of present value cost of this alternative is provided in Table A-45 in Appendix B. Estimated current dollar costs are summarized below.

Estimated Costs **Alternative 11 – Soil Amendment and Revegetation**	
Construction Costs	$218,600
O&M and Periodic Costs	$501,100
Net Present Value, 30-year period of performance	$418,100

6.0 COMPARATIVE ANALYSIS OF ALTERNATIVES AND PHASED APPROACH

This section provides a comparison of the alternatives against each other using the seven required criteria. The comparison of the alternatives using state and local acceptance criteria will be added after the public comment period. It is likely that a phased remedy will be selected for the Standard Mine site; therefore, the approach to developing the final remedy is discussed in Section 6.2.

The following alternatives were considered:

Alternative 1	No Action	
Alternative 2	Institutional Controls	
Alternative 3	Passive Water Treatment System	
	Alternative 3A	20 gpm five-stage PTS
	Alternative 3B	50 gpm four-stage PTS
	Alternative 3C	160 gpm four-stage PTS
	Alternative 3D	125 gpm three-stage PTS
	Alternative 3E	20 gpm four-stage PTS on non-USFS Land
Alternative 4	Treatment at Mt. Emmons Project WTP	
Alternative 5	Bulkhead at Level 1 – Regular or Flow-Through	
	Alternative 5A	Impermeable Bulkhead
	Alternative 5B	Flow-Through Bulkhead
Alternative 6	Surface Water Diversion	
Alternative 7	Flowable Fill and Foam in Level 3	
Alternative 8	Horizontal Drains in Level 3	
Alternative 9	Surficial Extraction Wells – Horizontal (9A) or Vertical (9B)	
Alternative 10	Contamination Source Control at Level 2	
Alternative 11	Soil Amendment and Revegetation	

The alternatives fit into four general categories:

Limited Action
Alternatives 1 and 2

Treatment
Water Treatment - Alternatives 3 and 4
Soil Treatment – Alternative 11

Source Water Control
Alternatives 6 (shallow and near-surface groundwater only), 8, and 9

Water Management within the Mine
Alternatives 5, 7, and 10

6.1 COMPARATIVE ANALYSIS OF ALTERNATIVES

The remedial action alternatives for Standard Mine, described individually in Section 5.2, are evaluated relative to each other in the following comparative analysis. The purpose of the comparative analysis is to identify the advantages and disadvantages of each alternative relative to the other alternatives using the established U.S. EPA criteria (Section 5.1). The seven threshold criteria and primary balancing criteria are discussed individually. The alternatives are ranked in each of the seven categories. A summary is provided in Section 6.1.8.

DRAFT

Alternative 3, which includes several potential scenarios, was ranked as one alternative except in the cost category. For this analysis, it was assumed that the PTS would be designed to meet the reasonable maximum adit discharge flow after the installation of one or more water control alternatives that would reduce the peak flow.

6.1.1 Overall Protection of Human Health and the Environment

The following sections discuss the relative ability of the alternatives to protect human health and the environment. A ranking is provided at the end of the section.

6.1.1.1 Surface Water Quality

- An impermeable bulkhead (Alternative 5A) would provide the most immediate improvement to surface water quality in Elk Creek basin.
- The water treatment alternatives (Alternatives 3 and 4) would provide dependable improvements in surface water quality by removing much of the metal load from the Level 1 adit discharge, but would be ineffective if operations and maintenance is discontinued. Due to the discharge locations, Alternative 3 would provide greater protection for Coal Creek than for Elk Creek and Alternative 4 would provide greater protection for Elk Creek than Coal Creek.
- Alternative 7 would improve surface water quality by preventing water that flows through the mine from contacting the most highly contaminated materials, thereby reducing the loading of metals to Elk Creek. Alternative 10 would act in a similar way to Alternative 7, but although more water would be intercepted, water that enters at Level 3 may contact some of the highly contaminating materials prior to entering Level 2.
- Source water control alternatives (Alternatives 6, 8, and 9) would reduce the amount of water that enters the mine workings and thus the loading of contaminants to Elk Creek, but the magnitude of the effect is unknown.
- Soil treatment (Alternative 11) would provide limited water quality improvement by directing adit discharge water away from the waste rock and by reducing the load of contaminants conveyed by water that does flow over and through the waste rock.
- Alternatives 1 and 2 would not improve downstream surface water quality.

6.1.1.2 Groundwater Quality

- The source water control alternatives (Alternatives 6, 8, and 9), Alternative 7, and Alternative 10 would provide the greatest impact to groundwater quality because less groundwater would become contaminated.
- The water treatment alternatives might somewhat improve groundwater quality as an indirect result of reduced loading to Elk Creek.
- Alternatives 1 and 2 would have no effect on groundwater quality.
- Alternative 5, particularly Alternative 5A, could degrade groundwater quality if alternate flow paths develop and convey water from the mine pool into the groundwater system. Some of the contaminants would be naturally attenuated in the subsurface.

DRAFT

6.1.1.3 Soil

Alternative 11 is the only alternative that addresses risks from exposure to site soils, and the improvement is limited to the contamination present at Level 98 and Level 5. The treatment area includes most of the remaining waste rock at the site. Risks from soils that are not mine waste but contain naturally elevated levels of metals or metals that were dispersed via air or water from mining activities would remain. The other alternatives do not directly address risk from exposure to site soils.

6.1.1.4 Ranking of Overall Protection of Human Health and the Environment

The alternatives rank as follows for overall protection of human health and the environment, from most protective to least protective. Rankings for source water control alternatives and management of water in the mine workings are subjective and based on professional judgment because quantitative data regarding flow reduction and contaminant reduction are not available. The rankings should be revised if additional studies that quantify the effects of these alternatives are performed.

1. **Alternatives 3 and 4** ranked high because of the significant reduction in metal loading from the Level 1 adit to Elk Creek.
2. **Alternative 7** ranked high because it protects both surface water and groundwater, but ranked lower than Alternatives 3 and 4 because water that enters the mine below Level 3 would still become contaminated in the mine workings and be discharged from the Level 1 adit, resulting in loading to Elk Creek greater than for the water treatment alternatives.
3. **Alternative 5A** would reduce metal loading from the Level 1 adit to Elk Creek to a greater extent than water treatment, but it was ranked lower due to the potential negative impact to groundwater.
4. **Alternatives 8, 9A, and 9B** Source water control alternatives are expected to provide less reduction in loading to Elk Creek from the Level 1 adit discharge but would maintain or improve groundwater quality.
5. **Alternative 6** was ranked lower than Alternatives 8, 9A, and 9B because it only intercepts surface water and near-surface groundwater.
6. **Alternative 10** is expected to provide some protectiveness, but the degree of protection is not certain so it was not ranked high.
7. **Alternative 11** while most effective at meeting the soil RAOs, only addresses a smaller portion of the risk to human health and the environment at the site than the other alternatives.
8. **Alternative 5B** is only as effective as the release control system or water treatment system that is used to manage the water, so does not by itself rank high for protecting human health and the environment.
9. **Alternative 2** would only restrict site access and land use, so would be minimally protective.
10. **Alternative 1** would provide no protection to human health and the environment.

DRAFT

6.1.2 Compliance With ARARs

The following sections discuss the relative ability of the alternatives to meet ARARs. A ranking is provided at the end of the section.

6.1.2.1 Groundwater

- Alternatives 6, 7, 8, and 9 reduce the volume of water that flows through the mine workings and therefore would minimize contaminant mobilization and reduce the volume of water that becomes contaminated.
- Alternatives 7 and 10 reduce the contact between water that flows through the mine to reduce contaminant mobilization, thereby reducing metal concentrations in groundwater.
- Alternative 11 treats waste rock and adds a vegetative cover. This would have a small impact on localized groundwater quality because the vegetation would reduce the infiltration of water through the waste rock and reduce mobilization of contaminants from the waste rock to groundwater. The effect would be minimal due to the small size of the remaining waste rock piles.
- Water treatment alternatives (Alternatives 3 and 4) would have minimal impact on groundwater quality.
- Alternatives that include administrative actions or no action would have no impact on groundwater quality.
- An impermeable bulkhead, Alternative 5A, would be the least effective in maintaining or improving groundwater quality due to the potential development of alternative flow paths that would allow contaminated water from the mine workings to flow to groundwater.

6.1.2.2 Surface Water

- In the short and mid-term, an impermeable bulkhead (Alternative 5A) would have the greatest effect on water quality in Elk Creek because it would stop flow from the Level 1 adit discharge. The long-term effect on surface water quality depends on whether alternate flow paths develop that allow contaminated water to exit the mine and ultimately end up in Elk Creek.
- Water treatment alternatives (Alternatives 3 and 4) would improve water quality in Elk Creek. Alternative 4 would have the greatest impact on Elk Creek because none of the Level 1 adit discharge water would enter Elk Creek. Alternative 3 would be better for Coal Creek because there is some attenuation of contaminants that are discharged to Elk Creek where fish populations are already inhibited by habitat limitations.
- Alternative 7 is expected to improve water quality in Elk Creek, but not to the degree of water treatment alternatives that treat all of the Level 1 adit discharge.
- Other alternatives that reduce flow through the mine are likely to improve water quality in Elk Creek, but the extent to which these alternatives will allow WQS to be met in Elk Creek is uncertain.
- Alternatives that include administrative actions or no action would have no impact on surface water quality.

DRAFT

6.1.2.3 Protection of Wetlands and Floodplains

Elk Creek

- Alternatives 4 and 5A would reduce the flow of water in Elk Creek downstream of Level 1. The water would be discharged to Coal Creek for Alternative 4. For Alternative 5A, the system is expected to stabilize over time and the net loss of water to Elk Creek would be minimal.
- Source water controls (Alternatives 6, 8, and 9) would divert the water away from Elk Creek in the vicinity of the Standard Mine, but the short distance of impact and the lack of fish habitat in that reach of the creek would make impacts minimal.
- Alternatives 1, 2, 3, 7, 10, and 11 would not change the flow of water to Elk Creek.

Wetlands

Alternatives that alter the flow regime of surface water and near-surface groundwater could affect the site wetlands.

- Alternatives 6, 8, and 9 would divert water away from the vicinity of the Standard fault zone and change the location where surface water enters Elk Creek, potentially impacting wetlands. The wetland between Level 1 and Level 2 would be the most impacted.
- New wetland areas may develop at channel overflow locations and the channel discharge points.
- Alternative 11 could also impact wetlands during construction, but erosion controls would be installed and the overall impact on wetlands should be positive.
- Alternative 3 may include dredging or otherwise disturbing a wetland area constructed at Level 1 during the Removal Action.
- Alternative 3A would create a treatment wetland.

6.1.2.4 Solid and Hazardous Waste

- Alternatives 3 and 4 create treatment residuals that must be disposed periodically.
- Alternatives 5, 7, and 10 may generate hazardous waste during construction if materials are removed from the mine workings.
- The bulkhead (Alternatives 5A and 5B) may require sediment removal that must be handled as solid or hazardous waste.

Management of the waste is not expected to negatively impact the viability of any of the alternatives.

6.1.2.5 Air

Dust control would be performed during construction and none of the alternatives are expected to cause a significant increase in dust.

DRAFT

The biochemical reactor portion of a passive water treatment system (Alternative 3) may generate sulfurous odors and engineering controls would be installed as necessary. None of the other alternatives are expected to generate odors.

6.1.2.6 Fish and Wildlife

All of the alternatives are expected to improve the ecological conditions near the Standard Mine. Site activities would be coordinated with natural resource trustees to ensure protection of target species and habitat during remedy construction, operation, and maintenance.

6.1.2.7 Noise

Construction of some of the alternatives would cause short term noise at the remote site location. The noise would not affect Crested Butte residents. None of the alternatives would create a long-term noise problem.

6.1.2.8 Ranking of Compliance With ARARs

The alternatives rank as follows for the ability to meet ARARs, from most likely to meet ARARs to least likely. This analysis is similar to the evaluation of protection of human health and the environment, but more emphasis was put on the ability to meet WQS in Elk Creek. Potential long-term effects on wetlands slightly downgraded some of the alternatives. Rankings for source water control alternatives and management of water in the mine workings are subjective and based on professional judgment because quantitative data regarding flow reduction and contaminant reduction are not available. The rankings should be revised if additional studies that quantify the effects of these alternatives are performed.

1. **Alternative 5A** would immediately eliminate metal loading from the Level 1 adit to Elk Creek and provide the greatest likelihood that WQS would be met in Elk Creek.
2. **Alternative 4** would be as likely as Alternative 5A to meet WQS in Elk Creek, but the treated water would introduce a limited amount of metal loading to Coal Creek.
3. **Alternative 3** ranked high because it would significantly reduce metal loading from the Level 1 adit to Elk Creek.
4. **Alternative 7** protects both surface water and groundwater, but it could not be ranked higher than water treatment because water that enters the mine workings below Level 3 would still mobilize and transport contaminants to Elk Creek.
5. **Alternatives 8, 9A, and 9B** are expected to provide less reduction in loading to Elk Creek from the Level 1 adit discharge but would maintain or improve groundwater quality.
6. **Alternative 6** was ranked lower than Alternatives 8, 9A, and 9B because it only intercepts surface water and near-surface groundwater.
7. **Alternative 10** protects both surface water and groundwater, but it could not be ranked higher than the above alternatives because metal loading from the Level 2 adit to Elk Creek could remain high and limit the ability to meet WQS in Elk Creek.

DRAFT

8. **Alternative 11** would improve localized surface water and groundwater quality, but the overall impact on the ability to meet surface water and groundwater ARARs would be less than for the other alternatives.
9. **Alternative 5B** would improve surface water quality in Elk Creek, and an attempt would be made to discharge water to best allow WQS to be met in Elk Creek, but there is not assurance that controlled discharges would allow WQS to be met in Elk Creek.
10. **Alternative 2** would meet the requirement for environmental covenant when waste is left in place, but would not improve the likelihood of meeting surface water and groundwater ARARs.
11. **Alternative 1** would not improve the likelihood of meeting surface water and groundwater ARARs.

6.1.3 Long-Term Effectiveness and Permanence

The following sections discuss the relative long-term effectiveness and permanence of the alternatives. A ranking is provided at the end of the section.

6.1.3.1 System Reliability

System reliability would strongly affect the long-term effectiveness and permanence of the remedy.

- There is not a lot of operational history regarding passive water treatment systems similar to Alternative 3, but the pilot study for a PTS indicates that a system would be reliable.
- The reliability of Alternative 4 depends primarily on the ability to maintain an agreement with the Mt. Emmons WTP owners. A transfer in ownership could result in the water not being treated, even after the pipeline is constructed. The pipeline diameter was selected to permit the flow of all water even during high runoff and freezing conditions; however, water that exits mine workings is prone to precipitating iron oxides that can clog pipes. A similarly sized pipeline that carried water from the Level 1 adit to the pilot PTS became clogged during 2008 and 2009.
- The bulkhead itself is expected to be reliable, but Alternative 5A would only be reliable if significant alternative flow pathways do not develop. The fractured nature of surrounding bedrock may allow water to flow from behind the bulkhead into groundwater and potentially into downgradient surface water.
- Alternative 5B is only as reliable as the associated mine discharge control system or treatment system.
- Alternative 6 is reliable as long as the ditches remain viable, but would be impacted by clogged culverts and eroded or damaged ditches.
- Alternative 7 is expected to provide long-term reliability once the sulfide mineral/water control system is in place and maintained for the initial few years. Alternative 10 would be less reliable that Alternative 7 due to the more extreme nature of the tunnel features that must be sealed to reduce sulfide mineral/water interactions for Alternative 10.
- Alternatives 8 and 9A would be similarly reliable, and Alternative 9B less reliable due to the dependence on pumps to control water flow.

DRAFT

- Alternative 11 would be reliable as long as the erosion control measures are maintained long enough that a stable vegetative cover develops.

6.1.3.2 Operations & Maintenance

The long-term effectiveness can also be affected by the consistency of O&M.

- The effectiveness of Alternatives 4 and 9B is fully dependent on continued operation of the system. As soon as water transmission to the Mt. Emmons WTP and treatment (Alternative 4) are discontinued or the pumps for Alternative 9B are shut off, the system will revert to pre-remedial conditions.
- A PTS (Alternative 3) would continue to operate after O&M was discontinued but would become gradually less effective over time, ceasing to be effective after several years.
- Alternatives 5, 6, 7, 8, 9A, and 10 would continue to operate even without consistent O&M, but may gradually become less effective as maintenance is discontinued.
- Alternative 11 is designed to be permanently effective once the vegetation is established; however, a significant storm event could damage the vegetative cover for a period of time. Extended periods of drought may also damage the vegetative cover.

6.1.3.3 Residual Risk

Residual contamination affects the effectiveness of the alternatives.

- Alternatives 1 and 2 do not address risks posed by exposure to contaminants in Standard Mine waste rock or adit discharges.
- Alternatives 3 through 10 work to reduce water contamination but are not effective in reducing risks from waste rock.
- Alternative 11 only addresses risks posed by the waste rock and does not address the Level 1 adit discharge.
- None of the alternatives reduce the flow of contaminated water that discharges from the Level 98 and Level 5 adits; however, these sources have been identified as contributing only minor metal loading to Elk Creek.

6.1.3.4 Ranking of Long-Term Effectiveness and Permanence

The alternatives rank as follows for long-term effectiveness and permanence, from most effective and permanent to least effective and permanent. Rankings are subjective and based on professional judgment and previous experience with similar systems. The rankings should be revised if additional studies that quantify the effectiveness of these alternatives are performed.

1. **Alternative 5A** ranked highest because it is reliable in the long-term with minimal O&M requirements to maintain effectiveness.
2. **Alternative 7** ranked high because it provides a reliable seal between Level 3 and the lower mine workings with minimal O&M requirements to maintain effectiveness.

DRAFT

3. **Alternative 5B** would be reliable in the long-term with minimal O&M requirements. The effectiveness of this alternative in reducing contamination in Elk Creek is dependent on water release timing or the water treatment system.
4. **Alternative 3** pilot studies have indicated a passive water treatment system would be reliable with low residual risk. Moderate O&M would be required to maintain effectiveness.
5. **Alternative 6** would provide a reliable means of surface water control but might not significantly reduce loading of metals to Elk Creek. Maintenance requirements are low to moderate.
6. **Alternative 11** would provide a reliable solution to capping the existing waste rock. The residual risk is low and moderate O&M would be required to maintain effectiveness.
7. **Alternative 4** would provide a reliable solution to treating contaminated water but depends primarily on the ability to maintain an agreement with the Mt. Emmons WTP owners.
8. **Alternatives 8, 9A, and 9B** lack sufficient data to evaluate the reliability. The fracture control flow regime makes it difficult to predict the reliability of these systems. Residual risk would be low for these alternatives and O&M would be moderate to high to maintain effectiveness.
9. **Alternative 10** is expected to be the least reliable due to the complex nature of the work. O&M requirements could be high to maintain the effectiveness of the alternative.
10. **Alternative 2** would only restrict site access and land use and is not reliable in treating or reducing contamination.
11. **Alternative 1** is not reliable in treating or reducing contamination.

6.1.4 Reduction of Toxicity, Mobility, and Volume through Treatment

The following bullets describe the relative reduction in toxicity, mobility, and volume through treatment. A ranking is provided at the end of the section.

- Water treatment alternatives (Alternatives 3 and 4) reduce the mobility of contaminants by transferring them from the dissolved form that is easily transported off-site by water into a solid form that would be disposed of in an approved facility. The volume of the contaminated material would be significantly reduced but treatment residuals would still exist.
- Alternative 5A would reduce the mobilization of metals by containing the contaminated water within the mine workings. This alternative may have the added benefit of reducing contaminant mobility by creating reducing conditions in the mine pool that develops behind the bulkhead, thus reducing the sulfide oxidation and the transfer of metals from the minerals to the water.
- Alternative 11 would decrease the mobility, bioavailability, and toxicity of metal contaminants present in the waste rock by allowing development of a vegetative cover that reduces erosion. The amendments and vegetative cover reduce metal mobility by precipitating metals and sequestering contaminants by complexation and sorption. The concentrations of contaminants in the waste rock/soil are not decreased by treatment.
- While not considered “treatment”, alternatives that prevent contact between water and the sulfide minerals present near and within the mine workings would decrease mobilization of contaminants and the volume of contaminated water.

The mobilization of contaminants to water that does pass through the mine workings would not change.

- Source water control alternatives (Alternatives 6, 8, and 9) prevent water from entering the mine, thus reducing the mobilization of metals and the volume of contaminated water. The highest reduction in contaminant mobility and the volume of contaminated water would result from alternatives that are most effective at decreasing the flow of water through the most contaminated portions of the mine workings.
- Alternatives that collect both deep and shallow groundwater (Alternatives 8 and 9) would reduce the water that flows through the most contaminated portions of the mine workings more than Alternative 6 that just reduces surface water and shallow groundwater flow.
- Alternatives 7 and 10 don't prevent water from entering the mine, but both significantly decrease contact between the water and the most highly contaminating materials that are present between Level 3 and Level 1. Alternative 7 would prevent the flow of water that flows into Level 3 of the workings from contacting the most contaminated materials between Levels 3 and 1 but would not prevent water from flowing through bedrock fractures into Levels 2 and 1 where it would contact and mobilize the sulfide minerals. Alternative 10 would also capture water that enters the mine workings below Level 3, but water that flows from Level 3 to Level 2 through contaminated materials would still continue to mobilize metals; therefore, it is believed that Alternative 7 would reduce the mobility of contaminants and the volume of contaminated water more than Alternative 10.

6.1.4.1 Ranking of Reduction in Toxicity, Mobility, and Volume

The alternatives rank as follows for reduction in toxicity, mobility, and volume, from greatest reduction to least reduction. Rankings for source water control alternatives and management of water in the mine workings are subjective and based on professional judgment because quantitative data regarding flow reduction and contaminant reduction are not available. The rankings should be revised if additional studies that quantify the effects of these alternatives are performed.

1. **Alternatives 3 and 4** would reduce the mobilization of contaminants present in the Level 1 adit discharge to off-site locations.
2. **Alternative 5A** would reduce the mobilization of contaminants from the Level 1 adit to off-site locations and may also reduce generation of dissolved metals if reducing conditions develop in the mine workings to the degree that sulfide oxidation is inhibited.
3. **Alternative 7** would reduce mobilization of contaminants via water that enters the mine at Level 3 and currently flows through lower portions of the mine workings, but contaminants would still be mobilized from water that enters the mine workings below Level 3.
4. **Alternative 11** would reduce the toxicity of contaminants present in waste rock at Levels 5 and 98 to ecological receptors, particularly vegetation, and would reduce the mobility of metals present in the waste rock. Alternative 11 would also reduce contact between the Level 5 and Level 98 adit discharges and waste rock, further reducing the mobilization of metals from the waste rock into water.

DRAFT

5. **Alternatives 8, 9A, and 9B** would reduce mobilization of contaminants by reducing the volume of water that flows through the mine workings.
6. **Alternative 6** was ranked lower than Alternatives 8, 9A, and 9B because it only intercepts surface water and near-surface groundwater.
7. **Alternative 10** works in a similar manner than Alternative 7 but contaminants that are mobilized as water flows from Level 3 to Level 2.
8. **Alternatives 1, 2, and 5B** would not reduce the toxicity, mobility, or volume of contaminated materials at the site.

6.1.5 Short-Term Effectiveness

The following sections discuss the relative short-term effectiveness of the alternatives. A ranking is provided at the end of the section.

6.1.5.1 Community Protection

Due to the location of the project site and the type of construction activities, the short term risk to the community is expected to be low.

6.1.5.2 Worker Protection

Potential risks to onsite workers are similar for alternatives that are constructed outside of the mine workings. Alternatives 5, 7, 8, and 10 would carry higher risks due to work being conducted within the mine workings, with Alternatives 7 and 10 carrying the highest risk to onsite workers.

6.1.5.3 Time to Achieve RAO's

The amount of time before the alternatives become effective varies.

- Alternatives 4 and 5A would achieve immediate reduction in loading of contaminants from the Level 1 adit discharge to Elk Creek.
- Alternatives 7 and 10 should provide reduction in contaminant loading within a short period of time after construction.
- Alternative 3 would achieve reduction in loading within a short period after construction, but full effectiveness of Alternative 3A would be delayed while the treatment wetland becomes established.
- The effects of source water control alternatives (Alternatives 6, 8, and 9) would be observed over a longer period of time.

6.1.5.4 Environmental Impacts

Environmental impacts could be created by implementation of the alternatives.

- Wetlands may be disturbed by construction of Alternatives 3 and 4 but the disturbance is not expected to be long-term.
- For Alternatives 6, 7, 8, 9, and 10, minor impacts could result from installation of channels used to transport water away from where it would enter the mine workings or to transport water from the Level 2 or Level 3 portals to Elk Creek.
- New wetland areas could develop where water overflows the channels and slope stability could be compromised, causing damage if soils on

DRAFT

steep slopes become saturated. The channels may also increase or decrease the flow of water in Elk Creek and change the location where the water enters Elk Creek.

- If preferential flowpaths are created under Alternative 5A, ground water quality may be impaired and surface water quality may be impacted where new flowpaths discharge contaminated ground water to Elk Creek.

6.1.5.5 Ranking of Short-Term Effectiveness

The alternatives rank as follows for short-term effectiveness, from most protective to least protective. Rankings are subjective and based on professional judgment and previous experience with similar systems. The rankings should be revised if additional studies that quantify the effectiveness of these alternatives are performed.

1. **Alternative 4** ranked the highest because of the short time to achieve the RAO's, relatively safe work environment, and minimal environmental impacts.
2. **Alternative 3** is safe to construct and time to achieve RAO's is short to moderate. Other environmental impacts should be minimal.
3. **Alternative 5A** ranked high because it achieves surface water RAO's immediately, with minimal environmental impacts; however, this alternative is not anticipated to achieve ground water RAOs. Worker protection is difficult during construction.
4. **Alternative 6** is safe to construct. The time to achieve RAO's can not be estimated. Other environmental impacts should be minimal.
5. **Alternative 5B** would make worker protection difficult during construction. The time to achieve RAO's would be dependent on the associated water treatment system. Other environmental impacts should be minimal.
6. **Alternative 11** would be constructed in safe working conditions. Environmental impacts should be minimal. Only RAO's related to the waste rock piles would be addressed.
7. **Alternatives 9A and 9B** provide relatively safe work conditions with minimal environmental impacts. Time to achieve RAO's is difficult to estimate due to the unknown effectiveness of the alternatives.
8. **Alternative 7, 8, and 10** would be constructed in potentially hazardous working conditions within the mine workings. Time to achieve RAO's is difficult to estimate due to the unknown effectiveness of the alternatives.
9. **Alternative 2** would protect the community but does not meet the RAO's developed for the project.
10. **Alternative 1** does not meet any of the short term effectiveness criteria.

6.1.6 <u>Implementability</u>

The relative implementability of the alternatives is discussed below. A ranking is provided at the end of the section.

6.1.6.1 Availability of Materials

Many of the construction tasks can be performed with standard construction equipment and labor.

DRAFT

- Specialized labor and equipment may be required for bedrock excavation for Alternatives 3 and 6 and to rehabilitate the adit tunnels for alternatives that are constructed within the mine workings (Alternatives 5, 7, 8, and 10).
- Alternative 8 would require specialized equipment and personnel to drill horizontal wells from within the Level 3 adit.
- Specialty drilling equipment and labor would be required for drilling the horizontal (Alternative 9A) or vertical (Alternative 9B) wells and for drilling the exploration well required to dewater the Level 1 adit prior to removal of the blockage (Alternative 5).
- Non-standard materials, equipment, and labor would be required to implement Alternatives 7 and 10.
- O&M for the water treatment alternatives (Alternatives 3 and 4) would require specialized labor that would be available within Colorado.
- Specialized labor would be required for periodic maintenance of Alternatives 3 through 10.

Specialized labor, equipment, and materials should be available regionally. With appropriate planning, labor, equipment, and materials needs should not limit the implementability of any of the alternatives.

6.1.6.2 Concerns during Construction

Construction concerns are similar for the alternatives and primarily involve adverse weather conditions, high altitude work, uneven terrain, and limited construction season.

- Alternatives that require the least construction time, such as Alternative 11, would be least affected by weather and the limited construction season.
- The ability to construct Alternative 10 is more uncertain than the other alternatives because of the variability of conditions in the mine workings and unknown conditions in segments of Level 2 that have not been explored. The reliability of the proposed construction materials will depend on the conditions encountered within the Level 2 tunnel.

6.1.6.3 Monitoring

None of the alternatives requires complex monitoring with the exception of Alternatives 5B and 3. If Alternative 5B is used to release water during periods when the most dilution water is available, consistent stream and adit discharge monitoring would be needed to appropriately time the releases. It is expected that the water would be released beginning in the early spring when the site is difficult to access by either snow equipment or vehicle, so remote sensing equipment would be needed. Specialized labor needed to monitor the effectiveness of all alternatives would be available within Colorado.

6.1.6.4 Administrative Feasibility

Administrative feasibility may limit the alternatives that will be approved for the remedial action.

DRAFT

- There may be difficulty obtaining agency approval for the water treatment alternatives due to long-term O&M requirements.
- Alternative 4 would also require an agreement between the agencies and the owner and operator of the Mt. Emmons Project WTP. The agreement would likely be revisited during changes in ownership of the facility or if mining commences at the Mt Emmons Project and the operating conditions change, introducing more uncertainty regarding the implementability of Alternative 4. The inability of the agencies to enter an agreement with a private party for water treatment may eliminate Alternative 4 from consideration.
- There may be difficulty implementing alternatives that require construction on USFS property. This includes Alternative 4, Alternative 6, and Alternatives 8 and 9 (depending on the location of ditches that would be installed to carry water to Elk Creek).

6.1.6.5 Constructability

Constructability of each alternative in conjunction with other alternatives was also considered.

- Alternative 3 could be constructed in parallel with Alternatives 5B, 6, 7, 8, 9, 10, and 11. In addition to treating the water that discharges from the Level 1 adit, the PTS could be used to treat the water discharged from Level 2 (Alternative 10), Level 3 (Alternative 7) or the source control alternatives, if necessary.
- The use of Alternative 3 with Alternatives 4 or 5A would be redundant.
- If Alternative 3 is installed in conjunction with Alternative 5B, it would be best if the bulkhead were constructed prior to the PTS because construction of the bulkhead could damage elements of the PTS.
- The other alternatives may be combined in parallel or series with each other.

6.1.6.6 Ranking of Implementability

The alternatives rank as follows for implementability, from easiest to most difficult. Rankings are subjective and based on professional judgment and previous experience with similar systems. The rankings should be revised if additional studies that quantify the effectiveness of these alternatives are performed.

1. **Alternative 1** is most easily implemented as it does not require construction, permits, or continued O&M.
2. **Alternative 2** is the next most easily implemented as construction activities are minimal.
3. **Alternative 11** is easily implemented and consists of minor construction activities and O&M requirements.
4. **Alternative 6** is easily constructible and may have moderate O&M requirements. Material availability to construct the berms will need to be evaluated.

DRAFT

5. **Alternatives 9A and 9B** are easily constructible with standard drilling equipment. O&M requirements should be moderate. Monitoring of the discharge water will be required on a regular basis.
6. **Alternatives 3 and 4** would require specialized labor and may be challenging to implement. Approval from other involved agencies could be difficult to obtain. Periodic O&M and maintenance may also be required.
7. **Alternatives 5A, 5B, 7, 8, and 10** involve work inside the mine workings and require specialized construction equipment and contractors. Construction is slow and difficult. O&M activities within the mine workings are difficult. Implementation of these alternatives may be challenging.

6.1.7 Cost

The alternative costs are ranked as follows for cost, from lowest to highest. The alternatives are grouped in $500,000 increments.

1.	Minimal Cost	**Alternative 1**	--
		Alternative 2	--
2.	Minimal to $500,000	**Alternative 11**	$ 418,100
3.	$1, 000,000 to $1,500,000	**Alternative 9A**	$1,475,600
4.	$1,500,000 to $2,000,000	**Alternative 3E**	$1,696,000
5.	$2,000,000 to $2,500,000	**Alternative 3A**	$2,005,000
		Alternative 6	$2,033,400
		Alternative 9B	$2,119,600
		Alternative 7	$2,185,100
		Alternative 5	$2,213,000
6.	$2,500,000 to $3,000,000	**Alternative 8**	$2,558,300
		Alternative 3B	$2,610,000
7.	$3,000,000 to $3,500,000	**Alternative 4***	$3,138,900
8.	$5,000,000 to $5,500,000	**Alternative 3C**	$5,381,000
		Alternative 3D	$5,473,000
9.	$8,000,000 to $8,500,000	**Alternative 10**	$8,275,500

The costs were calculated using a 30 year project lifetime. Additional expenditure would be required to maintain effectiveness past the project lifetime.

- Alternatives 1 and 2 would not incur additional costs after the 30 year project lifetime.
- Alternatives 3, 4, and 9B would not be effective without continued operation and maintenance after the 30-year project lifetime.
- The remaining alternatives would remain generally effective past the project lifetime; however, periodic O&M may be needed to ensure the remedy effectiveness is maintained.

DRAFT

6.1.8 Overall Ranking

An overall ranking was developed. The overall ranking assumes that each of the nine criteria is equally important in selecting a remedy. While some criteria are more important that others, the overall ranking can be useful in developing a remedial strategy. The overall rankings are presented in Table 6-1.

6.2 COMBINATION OF ALTERNATIVES

As mentioned previously, the individual alternatives evaluated above are not necessarily intended to serve as final remedies, but are components of a toolbox from which the final remedial actions will be built. Since none of the individual alternatives address all of the RAOs or ensure that the PRGs will be met, this section identifies a phased approach that might be used to develop the final remedy.

Based on the comparison presented above, the following should be considered in developing the final remedy.

- Alternative 2 includes institutional controls to restrict land use. Environmental covenants are required when site contaminants are left onsite, so it is expected that Alternative 2 will be part of the final remedy.
- Alternative 11 is the only alternative that addresses the soil RAOs, so it is expected that Alternative 11 will be part of the final remedy.
- Due to the difficulty of using Alternative 5B in a manner such that controlled releases allow water quality standards to be met, it is expected that a flow through bulkhead would be used to control the flow of water to a PTS.
- Alternatives 4 and 10 are very expensive and rank significantly lower than other alternatives that perform a similar function, so it is not expected that they will be included in the final remedy.
- Alternatives 3C and 3D are very expensive, but would likely be needed to meet ARARs at all times of year if another alternative that meters the peak flows out over a longer period of time or lessens the Level 1 adit discharge flow rate is not also used.
- The effectiveness of source water controls (Alternatives 6, 8, and 9) and Alternative 7 in reducing loading of contaminants to groundwater and Elk Creek is uncertain due to the complexities of the fractured bedrock-fault-vein system. Despite this, there is value in reducing the volume of water that passes through the mine working or reducing the contact between water and contaminating materials in the mine workings because it would reduce the degree to which an additional alternative, such as water treatment, must be employed.
- In the phased approach, it is expected that a bulkhead, source water controls, or Alternative 7 would be employed first, followed by other, similar alternatives or by water treatment.
- The alternatives can be constructed in any order, but it would be difficult and more expensive to install a bulkhead in Level 1 after construction of a PTS at Level 1.

Three examples of possible approaches to a phased remedy are presented below, but the list is not comprehensive.

DRAFT

Phased Approach 1

1. Institutional Controls + Impermeable Bulkhead + Soil Amendment/Revegetation.
2. Long-term surface water and groundwater monitoring to determine if alternative flow paths develop that impact downgradient groundwater quality and surface water quality. Monitor pressure behind the bulkhead and flow out of the Level 2 and Level 3 portals.
3. If necessary, install a PTS and use the bulkhead valve to meter water to the PTS.

Phased Approach 2

1. Institutional Controls + Source Water Control (Alternative 6, 8, or 9) + Soil Amendment/Revegetation + Flow-Through Bulkhead .
2. Monitor the Level 1 adit discharge flow rate and water quality and the Elk Creek flow rate and surface water quality. The results would be used to identify the need for additional action.
3. Additional Source Water Control or Alternative 7, if indicated.
4. Repeat Step 2.
5. If necessary, install a PTS sized to treat the new flow from Level 1.

Phased Approach 3

1. Institutional Controls plus Alternative 7 + Soil Amendment and Revegetation + Flow-Through bulkhead.
2. Monitor the Level 3 and Level 1 adit discharge flow rates and water quality and the Elk Creek flow rate and surface water quality. The results would be used to identify the need for additional action.
3. Additional Source Water Control if indicated.
4. Repeat Step 2.
5. If necessary, install a PTS that is sized to treat the new flow from the Level 1 adit and, if necessary, the Level 3 adit.

DRAFT

TABLE 6-1
Comparison of Alternatives Summary

Alternative	Overall Protection	Compliance with ARARs	Long-Term Effectiveness	Reduction in Toxicity, Mobility, and Volume	Short-Term Effectiveness	Implement-ability	Cost	Total	Overall Rank
Alternative 1	10	11	11	8	10	1	1	52	16
Alternative 2	9	10	10	8	9	2	1	49	15
Alternative 3A	1	3	4	1	2	6	5	22	2-T
Alternative 3B	1	3	4	1	2	6	6	23	4
Alternative 3C	1	3	4	1	2	6	8	25	5-T
Alternative 3D	1	3	4	1	2	6	8	25	5-T
Alternative 3E	1	3	4	1	2	6	4	21	1
Alternative 4	1	2	7	1	1	6	7	25	5-T
Alternative 5A	3	1	1	2	3	7	5	22	2-T
Alternative 5B	8	9	3	8	5	7	5	45	14
Alternative 6	5	6	5	6	4	4	5	35	9
Alternative 7	2	4	2	3	8	7	5	31	8
Alternative 8	4	5	8	5	8	7	6	43	13
Alternative 9A	4	5	8	5	7	5	3	37	11
Alternative 9B	4	5	8	5	7	5	5	39	12
Alternative 10	6	7	9	7	8	7	9	53	17
Alternative 11	7	8	6	4	6	3	2	36	10

DRAFT

7.0 PREFERRED ALTERNATIVE

Based on the evaluation provided above, EPA, CDPHE, and the USFS have proposed a preferred alternative. This section presents the rationale used in selecting the preferred remedy and a description of the phased approach that would be used to implement the remedy. The ranking of alternatives identified in Section 6 (Table 6-1) is a useful tool in selecting applicable remedial alternatives; however, the overall ranking for each alternative assumes that all criteria are equally important, which is not the case. Therefore, the agencies considered not only the ranking from Section 6, but also the overall likelihood of success in meeting the RAOs when selecting the components of the preferred alternative. The preferred alternative includes a phased approach to remediation as described below. The preferred alternative may be revised after consideration of community comments and concerns.

The highest ranking alternatives identified in Section 6 involve either water treatment or an impermeable bulkhead. The state is concerned about long-term O&M of a PTS and prefers that this remedy be used only as needed if WQS cannot be met using alternatives with less O&M obligations. Water treatment at the Mt. Emmons Project WTP is expected to encounter insurmountable administrative hurdles so was eliminated from further consideration. The local community has expressed concern about the use of an impermeable bulkhead. Therefore, these alternatives were not included as the initial step in managing site contamination.

Alternative 7, flowable fill and foam in Level 3, is the next most highly ranked alternative and is agreeable to all three agencies. Alternative 7 involves sealing the raises between Levels 2, 3, and 4 to prevent water flow to lower levels of the mine where it would contact the most highly contaminating materials before discharge at Level 1. Fractures and mineralized zones would be sealed to reduce the flow of water into the mine and to prevent contact with contaminant sources. Alternative 7 captures all of the water that enters the mine at and above Level 3, providing a greater degree of certainty of effectiveness relative to the other source water control alternatives (Alternatives 6, 8, 9A, and 9B).

A flow-through bulkhead (Alternative 5B) was added to the remedy to prevent the potential for uncontrolled releases of mine water from within Level 1. The flow-through bulkhead, while not effective in meeting the RAOs in and of itself, would allow for control of the Level 1 adit discharges in a manner that results in the least impact to aquatic receptors in Elk Creek. If water treatment is needed to meet WQS at Elk-08, the flow-through bulkhead could be used to regulate flow to the PTS thus reducing the design flow and the footprint and cost of the PTS.

Alternatives 1 through 10 do not address the Level 5 and Level 98 waste rock and adit discharges; therefore, Alternative 11 will be included to address these sources of contamination.

Finally, if several years of monitoring indicated that the alternatives identified above are not adequate to allow WQS to be met at Elk-08, a PTS (Alternative 3) would be installed. Because Alternatives 7 and 5B may change the flow and quality of water from the Standard Mine adits, the size and design of the PTS would be dependent on current adit discharge flow rate and water quality data at the time the remedial design for the PTS is being completed as part of the Phase 2 remedy.

Alternative 2, Institutional Controls, will be included as required by law.

PHASE 1 – SOURCE WATER CONTROL

Alternative 7 – Flowable Fill and Foam in Level 3

The portal and adit of Level 3 would be rehabilitated to allow construction within the workings. The raises would be re-collared and backfilled with polyurethane foam to prevent inflow from the Level 4 shaft and outflow to lower levels of the mine. Fracture zones along the fault or in bedrock in Level 3

would be sealed to reduce the inflow of water from the surrounding aquifer. The floor would be sealed to prevent interactions between the water and any contaminants located in the adit and to prevent flow to lower levels of the mine. Water would be directed out of the Level 3 portal and flow through a channel to Level 1 where it would be discharged to Elk Creek or treated.

The purpose of this alternative is to reduce the amount of water that enters the mine at Level 3 and direct the water that does enter Level 3 away from the most contaminated portions of the mine workings (between Levels 3 and 1) where contaminants are entrained in the water. This is expected to reduce the overall flow of water out of the mine workings. Metal concentrations in the Level 1 adit discharge should decrease by reducing rock-water interactions between Levels 1 and 3. Because data show that the water flowing into Level 3 has relatively low metal content compared to the Level 1 adit discharge and Alternative 7 prevents contact between the mine water and the contaminated materials within Level 3, the metal concentrations in the Level 3 adit discharge should be relatively low. Discharge from the Level 3 adit would be conveyed to Level 1 for one of two possible scenarios: discharge to Elk Creek or treatment in a PTS installed at Level 1.

The estimated cost of Alternative 7 is $2,185,100.

Alternative 5B – Flow-Through Bulkhead

The blockage in Level 1 would be removed and the adit would be rehabilitated to allow construction of a flow-through bulkhead. The bulkhead would be constructed within competent bedrock and include piping and valves for water discharge and sediment removal.

Rehabilitation of the Level 1 adit and installation of a flow through bulkhead would reduce the potential for an uncontrolled release of contaminated mine water and the resulting environmental impacts. Water could be released during periods of high runoff or when least likely to affect aquatic receptors in Elk Creek. Alternately, the valve may be used to attenuate flow to a water treatment system so the system could be designed to operate at a low to moderate flow rate throughout the year rather than be designed to accommodate high flows that occur during spring runoff and then operate at a fraction of capacity during low flow months.

The estimated cost of Alternative 5B is $2,213,000.

Alternative 11 – Soil Amendment and Revegetation

The waste rock at Levels 5 and 98 would be amended with lime, organic matter (compost), and fertilizer and seeded. Surface water and adit discharges would be routed around the treated soils.

The alternative would decrease the amount of water that flows through contaminated soils and transports contaminants to downstream waters and reduce interactions between human and ecological receptors and contaminated soils. The soil amendments would decrease the mobility of contaminants present in the soil and reduce the toxicity of contaminants to environmental receptors.

The estimated cost of Alternative 11 is $418,100.

Alternative 2 – Institutional Controls

Environmental covenants would be established with site property holders in order to minimize exposure to mine waste and other contaminated media. Fencing or signage will be installed as necessary to protect the remedy and limit visitor contact with site contaminants.

Phase 1 Monitoring

The impacts of the Phase 1 Remedial Action would be measured over a period of years to determine if an additional phase of treatment is needed and, if so, guide design of a Phase 2 system. The following monitoring would be performed as detailed in a site monitoring and maintenance plan.

Elk Creek Water Quality
Surface water quality in Elk Creek would be sampled regularly to determine progress toward meeting WQS at Elk-08. Samples will be collected at Elk-08 and at other current Elk Creek monitoring stations, as appropriate.

Adit Discharge
Phase 1 is expected to alter the flow rate and chemistry of the Level 1 adit discharge. The flume at Level 1 would be maintained and monitored on a regular basis to identify changes in flow rate from Level 1. The Level 1 adit discharge water would be sampled at the same time as Elk Creek monitoring stations to characterize changes in adit discharge chemistry. A flume would be installed at Level 3 and the flow and chemistry of the Level 3 adit discharge would monitored to determine if the water requires treatment. If so, the flow and water chemistry data from Levels 1 and 3 would be combined to identify the design flow and chemistry for the PTS.

Vegetation
After implementation of Alternative 11, progress toward meeting vegetative success criteria will be monitored.

BCR Pilot System
The BCR pilot system will be operated, maintained, and monitored until a determination of whether Phase 2 is necessary. This operation will provide valuable data about the long-term effectiveness of the system in reducing contaminant concentrations and help address state concerns about BCR operation and maintenance. The analytical monitoring program will be reduced from the level conducted during the pilot study.

PHASE 2 – WATER TREATMENT

Alternative 3 – Passive Treatment System

After monitoring the effects of Phase 1 on water quality in Elk Creek, it may be determined that the remedy does not adequately improve water quality at Elk-08. In that case, a PTS would be installed to treat water at Level 1. The water requiring treatment may originate from Level 1 alone, or may be a combination of Level 3 and Level 1 discharges depending on how the Phase 1 work has affected the hydrology within the mine and geochemistry of the mine discharge(s).

A specific design flow rate for the proposed PTS (which varies between Alternatives 3A, 3B, 3C, 3D, and 3E) is not presented here because the post-Phase 1 adit discharge flow and chemistry is unknown. Post-Phase 1 monitoring, as discussed above, will be used to determine if a PTS is necessary in order to meet PRGs, and if so, what size and configuration of a PTS is needed. Data gathered from Level 1 and Level 3 adit discharge monitoring would be used to determine the water treatment strategy (e.g., Level 1 only or both the Level 1 and Level 3 adit discharges) and the influent parameters for the PTS. The PTS would be designed to reduce loading to Elk Creek to the degree necessary to meet WQS at Elk-08.

8.0 LIST OF REFERENCES

Adriano, D. C. 2001. Trace Elements in Terrestrial Environments: Biogeochemistry, Bioavailability, and Risks of Metals, 2nd Edition.

Carpenter, C. D. 1958. Micawber Mine Cross Section: Standard Uranium Corporation. Unpublished Map, Office of Surface Mining Files, Docket Number 403817.

Colorado Department of Public Health and Environment (CDPHE). 2009. E-Mail from Mary Boardman dated December 15, 2009.

Colorado Division of Reclamation, Mining, and Safety (DRMS). 2007. Draft Underground Assessment, Standard Mine Superfund Site, Gunnison County, Colorado. March 7, 2007.

Colorado Division of Reclamation, Mining, and Safety (DRMS). 2009. Underground Investigation of Standard Mine Level 2, Gunnison County, Colorado. October 2009.

Golder Associates, Inc. (Golder). 2007. Final Report Water Treatability Study, Golinsky Mine, Lake Shasta, California. Golder Associates, Denver, Colorado

Golder Associates, Inc. (Golder). 2009a. Standard Mine Pilot Passive Treatment System Operations and Results for 2007 and 2008. Denver, Colorado.

Golder Associates, Inc. (Golder). 2009b. Final Report, Biochemical Reactor Mixing Study, Standard Mine Superfund Site, Crested Butte, Colorado. September 2009.

Golder Associates, Inc. (Golder). 2009c. Draft Report, Passive Treatment Alternatives in Support of Standard Mine Superfund Site Feasibility Study, Crested Butte, Colorado. November 2009.

Gusek and Wildeman. 2002. Gusek, J. J. and T. R. Wildeman. 2002. A New Millennium of Passive Treatment of Acid Rock Drainage: Advances in Design and Construction Since 1988. Proceedings of the 2002 National Meeting of the American Society for Mining and Reclamation, June 9-13, 2002 in Lexington, Kentucky. Published by ASMR, 3134 Montavesta Rd., Lexington, KY 40502.

Gusek, J. J., 2002. Sulfate-Reducing Bioreactor Design and Operating Issues: Is This the Passive Treatment Technology for Your Mine Drainage? Proceedings of the National Association of Abandoned Mine Land Programs Conference, Park City, Utah, September 15-18, 2002.

Gusek, J., T. Rutkowski, E. Blumenstein, B. Shipley. 2008. Two-year Sulfate Reducing Bioreactor Pilot Test at the Golinsky Mine, California. Proceeding of the 2008 American Society of Mining and Reclamation Conference. Richmond, Virginia. Published by ASMR, 3134 Montavesta Rd., Lexington KY 40502.

Knight Piesold and Company. 2001. Wyoming Department of Environmental Quality Abandoned Mine Land Division Ferris-Haggarty/Osceola Tunnel Drainage Study Winter 1999/2000 and 2000 Field Season Report. Knight Piesold, Denver, Colorado

Korte, K.M., C. E. Newcombe, R. A. Brennan. 2008. "Evaluation of Three Different Purities of Crab-Shell for the Remediation of Mine Impacted Water". Proceedings of 2008 National Meeting of the American Society of Mining and Reclamation, Richmond, VA, June 14-19, 2008.

Response, Engineering, and Analytical Contract (REAC). 2009. Technical Memo – Summary of 2008 Pilot-Scale Field Trial, Work Assignment 0-214, Standard Mine Site, Crested Butte, Colorado. April 30, 2009.

Reisman, D., T. Rutkowski, P. Smart, J. J. Gusek. 2008. The Construction and Instrumentation of a Pilot Treatment System at Standard Mine Superfund Site, Crested Butte, CO. Proceedings of 2008 National Meeting of the American Society of Mining and Reclamation, Richmond, VA, June 14-19, 2008.

Reisman, D., T. Rutkowski, P. Smart, J. J. Gusek. 2009. Passive Treatment and Monitoring at Standard Mine Superfund Site, Crested Butte, CO. Proceedings of 2008 National Meeting of the American Society of Mining and Reclamation, Richmond, VA, June 14-19, 2008.

Rose, A. W. 2004.Vertical Flow Systems – Effects of Time and Acidity Relations. Proceedings of 2004 National Meeting of the American Society of Mining and Reclamation, Morgantown, West Virginia, April 18-24, 2004. Published by ASMR, 3134 Montavesta Road, Lexington, KY 40502.

RS Means. 2009. 2009 Heavy Construction Cost Data. 23rd Annual Edition. Construction Publishers & Consultants. Kingston, MA.

Strosnider, W. H., B. K. Winfrey, R. W. Nairn. 2009. Performance of an Ecologically-Engineered Multi-Stage Acid Mine Drainage and Municipal Wastewater Passive Co-Treatment System. Proceedings of the 2009 American Society of Mining and Reclamation Conference. Billings, Montana. Published by ASMR, 3134 Montavesta Road, Lexington KY 40502.

Syracuse Research Corporation, Inc. (SRC). 2008a. Baseline Human Health Risk Assessment for the Standard Mine Site, Gunnison County, Colorado. March 19, 2008.

Syracuse Research Corporation, Inc. (SRC). 2008b. Baseline Ecological Risk Assessment for the Standard Mine Site. Gunnison County, Colorado. March 19, 2008.

Syracuse Research Corporation, Inc. (SRC). 2009c. Baseline Human Health Risk Assessment Addendum, Standard Mine Site, Gunnison County, Colorado. October 22, 2009.

Syracuse Research Corporation, Inc. (SRC). 2010. Baseline Ecological Risk Assessment for the Standard Mine Site Addendum. Gunnison County, Colorado. February 4, 2010.

The McConnell Group (TMG). 2009. Toxicity Test Report, Standard Mine Impact Site Treatment Evaluation Toxicity Tests. Letter Report from Mark Smith dated October 19, 2009.

Thomas, R.C. 2002. Passive Treatment of Low pH, Ferric Iron-Dominated Acid Rock Drainage. Doctoral Thesis. University of Georgia.

U.S. Bureau of Mines. 1962. Minerals Yearbook 1961, Volume I, Metals and Minerals (Except Fuels). Year 1961, Washington: United States Government Printing Office, 1962.

U.S. Environmental Protection Agency (EPA). 1988. Guidance for Conducting Remedial Investigations and Feasibility Studies Under CERCLA, EPA OSWER Directive 9355.3-01.

U.S. Environmental Protection Agency (EPA). 2000a. Constructed Wetlands Treatment of Municipal Wastewaters. Cincinnati, OH. EPA 625/R-99/010.

U.S. Environmental Protection Agency (EPA). 2000b. A Guide to Developing and Documenting Cost Estimates during the Feasibility Study. EPA 540-R-00-002. July 2000.

U.S. Environmental Protection Agency (EPA). 2005. Management and Treatment of Water from Hard Rock Mines.

U.S. Environmental Protection Agency (EPA). 2009. Civil Litigation Report Regarding Cost Recovery Action Under The Comprehensive Environmental Response, Compensation And Liability Act, As Amended, Standard Mine National Priority List Superfund Site, Crested Butte, Gunnison County, Colorado. Prepared by Andrea Madigan.

U.S. Environmental Protection Agency (EPA). 2010. Memorandum, Terrestrial Risk – Standard Mine. March 17, 2010.

U.S. Geological Survey (USGS). 2007. Hydrogeochemical Investigation of the Standard Mine Vicinity, Upper Elk Creek Basin, Colorado. U.S. Geological Survey Scientific Investigations Report 2007-5265 by A. H. Manning, P. L. Verplanck, M. A. Mast, and R. B. Wanty.

U.S. Geological Survey (USGS). 2009. Geochemistry of Standard Mine Waters, Gunnison County, Colorado, July 2009. U.S. Geological Survey Open File Report 2009-1292. By P. L. Verplanck, A. H. Manning, J. T. Graves, R. B. McCleskey, T. Todorov, and P. J. Lamothe.

U.S. Geological Survey (USGS). 2010a. Characterization of Geologic Structures and Host Rock Properties Relevant to the Hydrogeology of the Standard Mine in Elk Creek Basin, Colorado. U.S. Geological Survey Open File Report 2010-1008. By J. S. Caine, A. H. Manning, B. R. Berger, Y. Kremer, M. A. Guzman, D. D. Eberl, and K. Schuller.

U.S. Geological Survey (USGS). 2010b. Geophysical characterization of subsurface properties relevant to the hydrology of the Standard Mine in Elk Creek Basin, Colorado. U.S. Geological Survey Open File Report 2010-1284. By B. J. Minsley, L. B. Ball, B. L. Burton, J. S. Caine, E. Curry-Elrod, and A. H. Manning.

URS Corporation (URS). 2007. Phase I Engineering Evaluation/Cost Analysis (EE/CA), Standard Mine Site. November 9, 2006. April 2007.

URS Operating Services, Inc. (UOS). 2000. Analytical Results Report for Expanded Site Inspection, Ruby Mining District – South, Gunnison County, Colorado. June 30, 2000.

URS Operating Services, Inc. (UOS). 2007. Phase II Engineering Evaluation/Cost Analysis, Standard Mine Site, Crested Butte, Gunnison County, Colorado. July 2, 2007.

URS Operating Services, Inc. (UOS). 2008. Reclamation Plan, Standard Mine Site, Crested Butte, Gunnison County, Colorado. May 23, 2008.

URS Operating Services, Inc. (UOS). 2010. Draft Remedial Investigation Report, Standard Mine, Crested Butte, Gunnison County, Colorado. February 19, 2010.

Venot, C., L. Figueroa, R. A. Brennan, T. R. Wildeman, D. Reisman, M. Sieczkowski. 2008. Comparing Chitin and Organic Substrates on The National Tunnel Waters in Blackhawk, Colorado for Manganese Removal". Proceedings of 2008 National Meeting of the American August 2009 -30- 043-2269. Society of Mining and Reclamation, Richmond, VA, June 14-19, 2008. Published by ASMR, 3134 Montavesta Rd., Lexington KY 40502.

APPENDICES

Appendices are provided on compact disk.

APPENDIX A

Passive Treatment Alternatives

APPENDIX B

Cost Analysis for Alternatives 4 through 11