PACIFIC WESTERN TECHNOLOGIES, LTD. 11049 W. 44th Ave., Ste. 200, Wheat Ridge CO 80033 • 303.274.5400 • FAX 303.274.6160

April 12, 2010

Ms. Christina Progess
U.S. EPA, Region 8
1595 Wynkoop Street
Denver, CO 80202-1129

Project: **RAC2 Region 8 – Standard Mine Superfund Site**
Remedial Investigation/Feasibility Study Support
Remedial Action Work Assignment No. 011-RICO-08JM (term form)

Subject: **Report, Passive Treatment Alternatives in Support of Standard Mine Superfund Site Feasibility Study**

Dear Ms. Progess:

Pacific Western Technologies, Ltd (PWT) is pleased to provide the attached Report, Passive Treatment Alternatives in Support of Standard Mine Superfund Site Feasibility Study prepared by Golder Associates, Inc., with contribution by PWT.

If you have any questions about this report, please call me at 303-274-5400, ext. 48.

Sincerely,

Levi Todd, P.E.
Standard Mine Project Manager
Pacific Western Technologies, Ltd.

REPORT

REPORT

PASSIVE TREATMENT ALTERNATIVES IN SUPPORT OF STANDARD MINE SUPERFUND SITE FEASIBILITY STUDY

Crested Butte, Colorado

Submitted to: Pacific Western Technologies, Ltd.
11049 West 44th Ave, Ste. 200
Wheat Ridge, CO 80033

Submitted by: Golder Associates Inc.
44 Union Blvd., Ste. 300
Lakewood, CO 80228

Distribution :

1	Copy	PWT
1	Copy	Golder Associates Inc.

April 2010 093-81796

A world of capabilities delivered locally

Golder Associates

TABLE OF CONTENTS

1.0 INTRODUCTION 1
1.1 Background 1
2.0 PASSIVE TREATMENT 2
2.1 Treatment Design Assumptions 2
2.2 Treatment Processes 4
3.0 ANALYSIS OF ALTERNATIVES 7
3.1 Elements Common To All Alternatives 8
3.1.1 OPERATION AND MAINTENANCE (O&M) 10
3.2 Alternative 1: 20 gpm Five-Stage Passive Treatment System 13
3.2.1 Criteria Assessment 14
3.2.1.1 Overall protection of human health and the environment 14
3.2.1.2 Compliance with Applicable or Relevant and Appropriate Requirements (ARARs). 14
3.2.1.3 Long-term effectiveness and permanence 17
3.2.1.4 Reduction of toxicity, mobility, or volume 18
3.2.1.5 Short-term effectiveness 18
3.2.1.6 Implementability 19
3.2.1.7 Cost 19
3.3 Alternative 2: 50 gpm Four-Stage Passive Treatment System 20
3.3.1 Criteria Assessment 20
3.3.1.1 Overall protection of human health and the environment 21
3.3.1.2 Compliance with ARARs 21
3.3.1.3 Long-term effectiveness and permanence 22
3.3.1.4 Reduction of toxicity, mobility, or volume 22
3.3.1.5 Short-term effectiveness 23
3.3.1.6 Implementability 23
3.3.1.7 Cost 23
3.4 Alternative 3: 160 gpm Four-Stage Passive Treatment System 23
3.4.1 Criteria Assessment 24
3.4.1.1 Overall protection of human health and the environment 24
3.4.1.2 Compliance with ARARs 24
3.4.1.3 Long-term effectiveness and permanence 25
3.4.1.4 Reduction of toxicity, mobility, or volume 25
3.4.1.5 Short-term effectiveness 26
3.4.1.6 Implementability 26
3.4.1.7 Cost 26
3.5 Alternative 4: 125 gpm Three-Stage Passive Treatment System 26
3.5.1 Criteria Assessment 27
3.5.1.1 Overall protection of human health and the environment 27

3.5.1.2 Compliance with ARARs 27
3.5.1.3 Long-term effectiveness and permanence 28
3.5.1.4 Reduction of toxicity, mobility, or volume 28
3.5.1.5 Short-term effectiveness 29
3.5.1.6 Implementability 29
3.5.1.7 Cost 29
3.6 Alternative 5: 20 gpm Four-Stage Passive Treatment System on non-USFS Land 29
3.6.1 Criteria Assessment 30
3.6.1.1 Overall protection of human health and the environment 30
3.6.1.2 Compliance with ARARs 30
3.6.1.3 Long-term effectiveness and permanence 31
3.6.1.4 Reduction of toxicity, mobility, or volume 31
3.6.1.5 Short-term effectiveness 31
3.6.1.6 Implementability 32
3.6.1.7 Cost 32
4.0 COMPARATIVE ANALYSIS 33
4.1 Overall protection of human health and the environment 33
4.2 Compliance with ARARs 33
4.3 Long-term effectiveness and permanence 34
4.4 Reduction of toxicity, mobility, or volume through treatment 35
4.5 Short-term effectiveness 36
4.6 Implementability 37
4.7 Cost 37
4.8 Summary comparison of remedial alternatives 38
5.0 REFERENCES 39

List of Tables

Table 1 Design Basis Chemistry
Table 2 Potential Surface Water ARARs
Table 3 Alternative 1 Treatment Process Sizing
Table 4 Predicted PTS Effluent COC Concentrations and Percent Removals
Table 5 Alternative 1 Predicted Elk-08 Concentrations
Table 6 Alternative 2 Treatment Process Sizing
Table 7 Alternative 2 Predicted Elk-08 Concentrations
Table 8 Alternative 3 Treatment Process Sizing
Table 9 Alternative 3 Predicted Elk-08 Concentrations
Table 10 Alternative 4 Treatment Process Sizing
Table 11 Alternative 4 Predicted Elk-08 Concentrations
Table 12 Alternative 5 Treatment Process Sizing
Table 13 Alternative 4 Predicted Elk-08 Concentrations

Table 14 Comparison of Treatment Alternatives: Long-term Effectiveness and Permanence
Table 15 Annual Metal Mass Removal Rates
Table 16 Comparison of Treatment Alternatives: Reduction of Toxicity, Mobility, and Volume through Treatment
Table 17 Comparison of Treatment Alternatives: Short-term Effectiveness
Table 18 Comparison of Treatment Alternatives: Implementability
Table 19 Capital and 30-year Period of Performance Costs
Table 20 Comparison of Treatment Alternatives: Cost

Figures

Figure 1 Site Location
Figure 2 Land Area Available for Remedial Alternatives
Figure 3 Process Flow Diagram for Alternative 1
Figure 4 Alternative 1 (20 GPM) Sizing and Layout
Figure 5 Process Flow Diagram for Alternative 2, 3, and 5
Figure 6 Alternative 2 (50 GPM) Sizing and Layout
Figure 7 Alternative 3 (160 GPM) Sizing and Layout
Figure 8 Process Flow Diagram for Alternative 4
Figure 9 Alternative 4 (125 GPM) Sizing and Layout
Figure 10 Alternative 5 (20 GPM on Non USFS Property) Sizing and Layout

List of Appendices

Appendix A Detailed Cost Estimates
Appendix B Design Calculations
Appendix C Calculation of Predicted Elk-08 Concentrations
Appendix D Annual Metal Removal Rate Calculations

List of Acronyms

BCR - biochemical reactor

BOD - biochemical oxygen demand

COC – constituent of concern

DO – dissolved oxygen

EPA – Environmental Protection Agency

fasl - feet above sea level

Golder - Golder Associates Inc.

gpm - gallons per minute

mg/L - milligrams per liter

mL/L of water treated – millilitres per liter of water treated

MIW - mining influenced water

ORD - United States Environmental Protection Agency Office of Research and Development

ORP - oxidation reduction potential

PTS – passive treatment system

PWT - Pacific Western Technologies, Ltd.

TSS – total suspended solids

UOS – URS Operating Services Inc.

USFS – United States Forest Service

1.0 INTRODUCTION

Golder Associates Inc. (Golder) has contracted with Pacific Western Technologies, Ltd. (PWT), to provide support for the Standard Mine Superfund Site feasibility study process. Golder has developed passive water treatment alternatives to address surface water contamination at the site. The alternatives were developed to be included in a feasibility study which is being prepared by URS Operating Services Inc. (UOS). To that end, this report includes five remedial alternatives, presented in a format that is consistent with EPA Feasibility Study report guidance (EPA, 1988).

This work is being conducted in support of the Remedial Investigation/Feasibility Study, Standard Mine Superfund Site (Work Assignment: 011-RICO-08JM) under PWT's Remedial Action Contract (RAC2) with the U.S. Environmental Protection Agency (EPA), No. EP-W-06-006. This report was prepared under PWT's Work Order Rev 1 to Golder dated July 9, 2009, and is the deliverable identified in Task 9 of PWT's Work Plan for the Standard Mine Superfund Site dated March 27, 2009.

1.1 Background

The Standard Mine Superfund Site (Site) is an abandoned underground mine located about four miles west of Crested Butte, Colorado at an elevation of approximately 11,000 ft above sea level (Figure 1). Significant Site features include underground workings and an adit which discharges to Elk Creek.

In 2007, a one gallon per minute (gpm) pilot-scale passive treatment system designed to treat MIW from the Level 1 adit was constructed at the Site. The passive treatment system consists of a biochemical reactor (BCR) and aerobic polishing cell. The pilot passive treatment system has operated since 2007, and continues to operate. Details of the passive treatment system construction, monitoring, and performance evaluations have been published under separate cover (Golder 2009a; Reisman 2009; Reisman 2008).

The BCR was designed to reduce metals concentrations and increase the pH of influent MIW. The BCR contains a limestone-buffered organic treatment media and operates as a vertical-flow reactor. The limestone-buffered organic substrate (LBOS) is a mixture of organic materials (hay, wood chips, and sawdust), fine-grained limestone, and a bacterial inoculum (e.g. cow manure).

Monitoring data from 2007 through 2008 indicate the BCR effluent is characterized by a negative oxidation-reduction potential (ORP), a pH of about 6.2 (except during spring flow conditions), and elevated concentrations of alkalinity, sulfide, biochemical oxygen demand (BOD), and E. coli. (Golder 2009a). Metal removal rates from 2007 to 2008 for cadmium, copper, lead, and zinc were greater than 98% and were typical for the BCR treatment technology (Gusek et al. 2008). Preliminary results from 2009 indicate that similar metal removal percentages continue to be achieved.

2.0 PASSIVE TREATMENT

2.1 Treatment Design Assumptions

Full-scale passive treatment systems are in operation at multiple sites in North America to treat mining influenced water (MIW) (Gusek and Wildeman 2002) and are ideally suited for sites with restricted access and without electricity, conditions that are present at the Standard Mine Site. Based on the results of the pilot-scale passive treatment system at achieving significant metal removal from the Level 1 adit MIW, a full-scale passive treatment system was included, with multiple alternatives, within the feasibility study for the Standard Mine site. The treatment alternatives presented herein are designed to treat Level 1 MIW based on the following assumptions.

Land Area Available

The land area available for the treatment alternatives was limited to the current disturbed area at the Site. As defined for the purposes of this study, the disturbed area comprises the mining-impacted area from the Level 1 adit to the southern edge of the former tailings basin as shown on Figure 2. The available land area is about 113,933 square feet or 2.6 acres. The majority of the treatment area is limited to the disturbed area. However, all remedial alternatives do include the construction of an aeration channel outside of the disturbed area.

The land area available includes United States Forest Service (USFS) property as shown on Figure 2. In order to avoid potential siting issues with the USFS, one alternative was designed to not require USFS property. The remaining alternatives would require construction on USFS land.

Design Basis Flow Rates

Based on limited adit flow data collected by the EPA, the baseflow rate appears to be less than 20 gpm. The adit discharges at this baseflow rate from late summer until late spring when snowmelt begins. Flow during the spring is known to be higher, but has not yet been able to be measured accurately. Three design basis flow rates were selected as follows:

- Low Flow [20 gallons per minute (gpm)] – A low flow alternative capable of treating the Level 1 MIW baseflow discharge was developed.
- High Flow (160 gpm) – A high flow alternative was developed using the maximum land area available.
- Medium Flow (50 gpm) – After selection of a low and high flow rate, a medium flow alternative was developed with a design flow rate of 50 gpm.

Design Basis Chemistry

Level 1 adit water quality data collected during pilot scale BCR operation (2007 to present) were compiled in order to determine the design basis chemistry. The maximum metal concentrations and minimum pH, provided in Table 1, measured in the Level 1 adit discharge were used for the design

basis. For parameters that have relatively consistent concentrations (i.e., copper, manganese, zinc) the average values (Table 1) are similar to the design values. The average and design values for pH, aluminum, iron, and lead, on the other hand, are substantially different. Note that the design basis chemistry is based on total concentrations whereas the discharge requirements are mostly dissolved concentrations.

TABLE 1

DESIGN BASIS CHEMISTRY

Parameter	Units	Design Values	Average Values
pH	s.u.	3.3	6.1
Aluminum, total	µg/L	11,200	230
Cadmium, total	µg/L	170	130
Copper, total	µg/L	1,100	260
Iron, total	µg/L	21,200	5,600
Lead, total	µg/L	5,800	1,540
Manganese, total	µg/L	12,700	11,000
Zinc, total	µg/L	30,900	26,500

Potential Constituents of Concern

Based on the metals concentrations measured during the treatability study (Golder 2009a) and the likely discharge requirements, the potential constituents of concern (COC) are cadmium, copper, iron, lead, manganese, and zinc. The adit discharge concentrations of these metals exceed the in-stream surface water quality standards for Elk Creek which are provided in Table 2.

Gravity Flow

Based on site topography and lack of electricity, all of the remedial alternatives will function via gravity flow. The adit discharge would be controlled with a bulkhead or a flow diversion structure or a combination of both.

Winter Operation

The remedial alternatives are all designed to function in the harsh site climate which is characterized by long cold winters and short summers. The average annual temperature at a nearby weather station is -0.1º Celsius (C.) with an average winter temperature of -9.2ºC. And an average summer temperature of 9.6 ºC. (Golder 2009a). Snow cover usually exists from mid-November through May or June and the annual snowfall typically ranges from 400 to 700 inches. The most reliable access from December to May is on skis via the Elk Creek Trail which is prone to avalanches. Based on the

site climate and difficult access, the remedial alternatives were designed based on the assumption that they would function unattended for approximately six to eight months per year.

2.2 Treatment Processes

A passive treatment system (PTS) consisting of up to five unit processes could be implemented at the Site. The sequence of the unit processes would be as follows: settling basin, biochemical reactor, mixing basin, aerobic wetland, and aeration channel. A general description of the unit processes follows.

Settling basin – The settling basin would receive MIW and allow total suspended solids (TSS) removal via gravity settling. The primary purpose of TSS removal is to prevent solids from fouling the subsequent unit process, the biochemical reactors. The settling basin is expected to remove grit (e.g., sand) and iron hydroxide precipitates. A settling basin is included in all five alternatives. The settling basins were designed based on a 24-hr. detention time, an assumed sludge accumulation rate, and a sludge removal interval of 5 years. The settling basin would be designed to function year round. In winter months when the surface is frozen and covered in snowwater would exit the settling basin through a submerged intake below the ice. The settling basin would contain an emergency spillway that drains back to Elk Creek.

Biochemical reactor (BCR) – A solid-phase BCR would receive water from the settling basin. Thomas (2002) characterized the following BCR treatment processes:

- biological reduction of sulphate to sulphide, and subsequent precipitation of metal sulphides;
- alkalinity increase due to dissolution of limestone contained within the substrate and reduction of sulphate;
- precipitation of metal hydroxides, and
- Sorption of trace metals (e.g., cadmium, copper, lead, zinc) to metal hydroxides and the organic media.

The pilot BCR contained limestone-buffered media consisting of wood chips, hay, limestone, and cow manure. Based on the results of the pilot testing, a similar reactor media is recommended for the full-scale design. The sulfide generated by the BCR treatment process would be partially consumed by metal sulfide precipitation, partially released as gaseous hydrogen sulfide, and partially released from the BCR cell as aqueous sulfide. The aqueous sulfide can be treated in a mixing basin as described below. A minimum of two BCR cells would operate in parallel to allow for operational flexibility. BCR effluent contains residual nutrients such as BOD, ammonia, and phosphorus, and *E. coli* bacteria. These parameters can be polished in subsequent unit processes. BCR treatment is included in all five alternatives. The BCR design criteria includes a volumetric molar metals loading rate (i.e., moles of metals per cubic meter per day) and a maximum acidity loading rate of 35 grams per square meter of BCR surface area per day (Rose, 2004). Although the BCR design volume is based on the

aforementioned molar metals loading rate, the predicted effluent concentrations are based on the results from the pilot study. Whether the percent COC removal would increase with a larger bioreactor for a given flow rate has not been tested during the pilot study. While this may be possible, data from other operating BCRs does not suggest that it would necessarily be the case, and regardless, the magnitude of the effect is unknown.

Mixing basin – The mixing of organic-laden water such as BCR effluent with MIW, also known as co-treatment, is effective in removing metals from the MIW and destroying pathogens and reducing residual nutrients and sulfide in the BCR effluent (Stonier et al., 2009; Gusek et al., 2008). The term co-treatment implies that each water source provides treatment of the other water source in a mutually beneficial process; the BCR effluent treats the MIW by removing metals via metal sulfide precipitation and sorption to organic matter while the MIW treats the BCR effluent by removing sulfides, diluting residual nutrients (i.e., BOD, ammonia, and phosphorus), and destroying pathogens (e.g., *E. coli*) with acidity.

Based on the results of a bench-scale mixing study (Golder 2009b), a mixing ratio of one and a half parts BCR effluent to one part MIW (1.5 BCR: 1 MIW) was used in the treatment alternatives. At this mixing ratio, the mixing basin would remove more than 98% of the cadmium, copper, lead, and zinc from the MIW stream while significantly reducing sulfide and residual nutrients in the BCR effluent stream. The mixing basin discharges to the aerobic wetlands (if present) or aeration channel. A mixing basin is included in four of the five alternatives. Based on the results of the mixing study (Golder 2009b), the mixing basin design was based on a 24-hour detention time, an assumed sludge accumulation rate of 0.5 mL of sludge per liter of water treated, and a sludge removal interval of 5 years.

Aerobic Wetland – The aerobic wetland would receive water from the mixing basin and provide treatment of the residual nutrients and bacteria (EPA, 2000). Aerobic wetlands, also known as surface-flow wetlands, typically contain planted areas and open water zones. Typical wetlands are constructed as series of terraced cells with intermediate spill points. An aerobic wetland is included in only one alternative; the other alternatives lack sufficient space. The wetland design criteria include an influent BOD concentration of 100 milligrams/liter (mg/L), a target effluent BOD concentration of 12 mg/L, and a minimum water temperature of 1º Celsius.

Aeration channel – An aeration channel would receive water from the mixing basin or aerobic wetlands and provide additional polishing of residual nutrients prior to discharge to Elk Creek. Physical aeration and an increase in dissolved oxygen would occur in the channel due to the relatively steep gradient. An aeration channel is included in all five alternatives. Aeration channel design criteria for residual nutrient, TSS, or bacterial removal are not well established. The design length of the aeration channels for each alternative was dictated by the distance between the PTS and Elk Creek. Based on the short residence time, the channels are expected to provide a limited

degree of polishing treatment. If polishing of residual nutrients is not a priority, the aeration channel could be eliminated from the alternatives and the PTS effluent could be discharged directly to Elk Creek. In that case, Elk Creek downstream of the treatment system could be considered to function as the aeration channel, reducing the area required to construct the treatment system. However, under this scenario, Elk Creek would contain excess nutrients and bacteria and reduced dissolved oxygen immediately downstream of the PTS discharge location.

3.0 ANALYSIS OF ALTERNATIVES

This section provides an analysis of the alternatives proposed for addressing the Level 1 MIW at the Site. The alternatives are evaluated based on the criteria provided by the EPA *Guidance for Conducting Remedial Investigations and Feasibility Studies under CERCLA* (EPA 1988). The PTS alternatives developed based on the design assumptions and understanding of the treatment process are:

- **Alternative 1:** 20 gpm Five-Stage Passive Treatment System
- **Alternative 2:** 50 gpm Four-Stage Passive Treatment System
- **Alternative 3**: 160 gpm Four-Stage Passive Treatment System
- **Alternative 4:** 125 gpm Three-Stage Passive Treatment System
- **Alternative 5:** 20 gpm Four-Stage Passive Treatment System on non-USFS Land

Each alternative is described in detail within the analysis of that alternative.

The alternatives were evaluated with respect to seven of the nine criteria as follows:

- Overall protection of human health and the environment;
- Compliance with Applicable or Relevant and Appropriate Requirements (ARARs);
- Long-term effectiveness and permanence;
- Reduction of toxicity, mobility, or volume;
- Short-term effectiveness;
- Implementability; and
- Cost.

The two remaining criteria, State and Community Acceptance, are not evaluated for the PTS alternatives because those criteria will be applied to the overall alternatives within which the PTS alternatives will be included.

The potential surface water quality ARARs are provided in Table 2 and are based on the State of Colorado surface water quality standards for Elk Creek. The metal standards, where applicable, are based on a hardness value of 65 mg/L as $CaCO_3$. These standards may be applied at a point some distance downstream from the Standard Mine Site, such as sampling location Elk-08. For the purposes of this document the potential ARARs will be referred to as the potential discharge requirements.

Whether an alternative is able to achieve compliance with ARARs may also depend on the how soon after startup the standards need to be met. Some residual nutrients are expected to decrease fairly quickly during the first year of operation, and although the concentrations may exceed discharge standards during that first year, they can reasonably be expected to meet discharge standards thereafter.

TABLE 2: POTENTIAL SURFACE WATER ARARS

(Concentrations are dissolved concentrations in micrograms per liter unless noted)

	Acute	Chronic
Cadmium, µg/L	1.2	0.31
Copper, µg/L	9.0	6.2
Iron (Water Supply), µg/L	NL	300
Iron (Total Recoverable), µg/L	NL	1000
Lead, µg/L	40	1.6
Manganese (Water Supply), µg/L	NL	50
Manganese, µg/L	2590	1430
Zinc, µg/L	99	86
NH_3, mg/L	**	**
Cl_2, mg/L	0.011	0.019
D.O., mg/L	6	
D.O. (sp), mg/L	7	
pH	6.5-9.0	
F. Coli , per 100 ml	NL	
E. coli, per 100 ml	126	
CN, mg/L	0.005	
Sulfur, mg/L	0.002	
Boron, mg/L	0.75	
NO_2, mg/L	0.05	
NO_3, mg/L	10	
Chloride, mg/L	250	
SO_4, mg/L (Water Supply)	250	

NL Not Listed

** Ammonia standards are based on whether early life stages are present or absent and are based on pH.

A hardness value of 65 mg/L as $CaCO_3$ was used to calculate hardness-based metal standards.

3.1 Elements Common To All Alternatives

Three unit processes, a settling basin, BCRs, and an aeration channel, are common to all five alternatives. The settling basins would remove suspended solids including suspended metals such as iron hydroxide via settling. The BCRs would provide significant removal of cadmium, copper, lead, and zinc via the removal processes identified in Section 1.0. The final treatment process, the aeration channel, would provide treatment of residual nutrients and manganese prior to discharging to Elk Creek.

In order to minimize the system footprint, all of the unit processes including the settling basin would be constructed in vertical-sidewall concrete basins. MIW would flow into the settling basin which would be located near the adit portal. The flow rate into the basin would be controlled with an adit

bulkhead or a flow diversion structure (e.g., flow-splitter box, constant head tank) or a combination of both.

The settling basin is included in all the treatment alternatives to promote TSS removal via settling. TSS concentrations of the MIW upon which to estimate a solids accumulation rate in the settling basin were not available. For the purposes of this study, the solids accumulation rate is assumed to be the same as the mixing basin accumulation rate as discussed in Section 3.2. The settling basin would be designed to function year round. In winter months when the surface is frozen and covered in snowwater would exit the settling basin through a submerged intake below the ice. The settling basin would contain an emergency spillway that drains back to Elk Creek.

All remedial alternatives include two BCR cells in parallel to allow for operational flexibility. The BCRs would be designed as vertical flow reactors with water entering above the media, flowing down through the media, and exiting via perforated pipes in a gravel drainage layer. A flow splitter would be used to distribute flow evenly between the parallel BCR cells. The BCR cell would have a concrete floor and concrete sidewalls approximately 5 feet to 6 feet in height. The BCR cells would be insulated with a wood chip fill layer and a geomembrane cover similar to the pilot system. The cover would be equipped with 2” Sch. 40 PVC vent pipes. Coupled with typical surface water controls, such as diversion ditches as necessary, the designed system would prevent surface water from entering the BCR. Similar to the pilot system, the cover would be designed to withstand the potential snow loads at the site (the wood chips in the top of the BCR help in this regard to prevent/minimize compaction of the media). The BCR effluent would discharge to a mixing basin (Alternatives 1, 2, 3, and 5) or an aeration channel (Alternative 4).

The third common process to all alternatives is an aeration channel. The aeration channel would have a one-foot wide bottom width, 3:1 sideslopes, and a total depth of one foot. The channel would be lined with geomembrane and backfilled with riprap. The channel would be constructed along the old mine access (a.k.a. Elk Creek Trail) to minimize construction impacts to the forest. The aeration channel would receive water effluent from the treatment system only, which is not expected to contain elevated concentrations of suspended solids. Channel design will minimize storm water runoff from entering the channel and depositing sediment. Sedimentation of the aeration channel is not expected to be an operation and maintenance (O&M) issue.

Residual Nutrients and Bacteria

The BCR effluent would contain residual nutrients and *E. coli* bacteria. In general, the concentrations of these parameters are highest during the first year of operation as readily degradable organic matter is flushed from the BCR cell. During treatability testing, the BOD concentration decreased from 314 milligrams (mg)/liter (L) during startup to an average value of 65 mg/L after one year of operation (six sampling events during the summer of 2008).

E. coli concentrations decreased from 1.2×10^7 counts (most probable number) per 100 mL during startup to less than the detection limit after one year of operation (Golder 2009a). Effluent ammonia concentrations averaged 5.1 mg/L as nitrogen (N) in the six sampling events conducted in the summer of 2008. A year-to-year comparison of ammonia values is not currently available; the upcoming 2009 annual pilot report will contain ammonia data.

3.1.1 OPERATION AND MAINTENANCE (O&M)

Annual O&M would consist of verifying proper flow rates, pipe inspections and cleaning, sampling, and reporting. Every five years, solids/sludge removal from the settling basin would be required. The BCR media would need to be replaced every 10 to 20 years.

BCR Media Replacement

The longevity of BCR media can estimated based on limestone and carbon longevity. Theoretical limestone and carbon longevity estimates for the pilot system are 6 and 21 years, respectively (Golder 2009a). Due to the short longevity estimate for limestone, the full-scale bioreactor media should contain a higher proportion of limestone in order to increase the longevity. Longevity estimates for other BCR systems are typically between 10 and 20 years (Gusek and Schuek 2004). At the end of its lifespan, the media would likely consist of non-degradable organic matter (i.e., lignin), metal sulfides, and residual limestone. Media disposal options include disposal in an on-site repository, disposal in a landfill, or drying and burning of media on Site for volume reduction and subsequent disposal in a repository or landfill.

During a media replacement event, the BCR would be drained prior to excavation and disposal. Spent BCR media is different from typical metal hydroxide water treatment sludge which requires mechanical dewatering with filter presses. In a BCR, metal sulfides accumulate within the organic media during treatment of mine waters and are removed along with media during replacement events. BCR media has been to shown to drain readily in place without any specific dewatering processes (Golder 2007). The pilot BCR at the Golinsky site drained in about 20 hours. The drainage rate is a function of permeability, field capacity, and residual moisture content, factors that are not very sensitive to changes in temperature. Substrate age may also affect the drainage rate, as degradation of substrate with time may lead to a higher degree of fine particles which will drain more slowly. Regardless, the substrate drainage rate at the Standard mine is expected to be similar to the Golinsky site pilot BCR and the total drain time is expected to be from several days to one week assuming similar substrate composition and ages. Water drained from the BCR water would be recycled for treatment by the other BCR(s) on site. It is anticipated that draining of the BCR and allowing the BCR media to dewater within the BCR cell itself will be sufficient to adequately prepare the BCR media for either on-site or off-site disposal. However, future pilot testing of dewatering and disposal options at the Standard Mine site will be conducted if necessary to finalize a site-specific media disposal strategy. The media replacement would likely occur over two construction seasons to

allow continual treatment in one BCR cell while the other is being refurbished. The cost estimates for replacing the BCR media include the costs for construction over a two year period and the associated mobilization charges, but for clarity and simplicity the costs are totaled and shown in one year (Appendix A).

The spent media would be tested to determine if it is a characteristic hazardous waste. In general, BCRs throughout the industry have not been in operation long enough to determine characteristics of spent media. If testing reveals that the media or media ash is hazardous, the media would be fixed (e.g., with cement and/or crushed limestone or fly ash) in order to render it non-hazardous. Fixation of sludge is a common process in industrial wastewater treatment plants. Because the lifespan of the media is expected to be greater than 10 years, acceptable fixation methods and disposal options would be evaluated during the initial media replacement event.

The cost estimates presented herein assume off-site disposal of spent BCR media for the reasons discussed below, though on-site disposal is not precluded. Design and construction of the existing site repository was a significant effort due to lack of available space on site, multiple stakeholder input, and site construction challenges. The existing repository is closed and it would be expensive to periodically re-open the repository, distribute materials such that site drainage is maintained, and re-cover the affected area. On the other hand, fuel costs could increase significantly in the future which could make on-site disposal cost effective. Also, on-site disposal is consistent with EPA “green” initiatives to reduce greenhouse gas emissions and spent media is managed at the site where it was generated rather than consuming local landfill space. The feasibility and cost of on-site disposal is highly dependent on the size of the BCR. If burning of the spent media is allowed prior to placement in a repository, that will reduce the volume of spent media, but the remaining ash will still contain metals with the same concern for release. At two other pilot sites, the ash was mixed with Portland cement to form a concrete-like waste prior to disposal (Knight Piesold 2001). Pending detailed design analysis of on-site versus off-site disposal, the PTS alternatives presented herein assumed off-site disposal of the spent BCR media as a dependable and proven management approach.

The replacement of media would consist of mixing fresh media off-site. Trucks would haul fresh media to the Site and return with spent media rather than deadhead empty.

Solids/Sludge Removal

PTSs generate low quantities of sludge compared to active lime treatment systems due to the formation of compact metal sulfide sludge rather than the more voluminous metal hydroxide sludge. The settling basin and BCRs would accumulate solids or sludge as described below.

- Settling Basin Solids - Solids are expected to accumulate in the settling basin and would need to be removed about every five years. Solids removal from the settling basin would be accomplished with a vacuum truck or skid-steer loader. Solids could

be dewatered on site using dewatering containers such as the Geotube™. The solids are assumed to accumulate at a rate of 0.5 mL per liter of treated water (mL/L of treated water) and the basin contains sufficient storage for 5 years of sludge accumulation. Based on qualitative observations during treatability testing and adit water quality data, the accumulated solids are expected to be comprised of iron hydroxides and sediment.

- BCR Media - Disposal considerations for the BCR media are discussed in the previous section.

- Mixing Basin Sludge - Sludge removal from the mixing basin would be required. Based on the results of the mixing study (Golder 2009b), the sludge generation rate in the mixing basin is expected to be about 0.5 mL/L of treated water. The mixing basin design includes 78 yd^3 of sludge storage volume which is the equivalent of about five years of sludge storage. The sludge would likely be comprised of organic matter and metal sulfides. The hazardous characteristics of the mixing basin sludge are unknown; pilot testing of the mixing process is recommended to allow further characterization. Sludge removal would be accomplished with a vacuum truck or skid-steer loader.

Engineering Controls

The Site is frequented by recreationalists year-round due to the Elk Creek Trail, a popular hiking and motor-biking trail, which leads from Kebler Pass Road near the town of Crested Butte to the Site. Engineering controls would include limiting Site access with fencing and signage to protect the PTS and prevent vandalism during summer months. These controls would be buried in snow in winter months and rendered ineffective. Winter-time controls would include signage to limit snowmobile traffic in the treatment system area.

Long-Term Monitoring

Long-term monitoring would be required to verify compliance with Site discharge requirements. Over the course of the first year, monthly monitoring would be recommended to verify proper startup and operation. After the first year, the monitoring frequency would be reduced to bi-monthly (i.e., every other month). A sampling and analysis program would be necessary under this alternative and, at a minimum, would include the following influent and effluent parameters: cadmium, copper, iron, lead, manganese, zinc, BOD, TDS, TSS, nitrate, ammonia, and total phosphorus. In addition, influent and effluent flow rate, pH, temperature, specific conductance, dissolved oxygen (DO), and oxidation-reduction potential would be measured in the field. Sampling during winter and spring months is difficult given the heavy snowfall and lack of road access to the Site. During treatability testing, the most reliable Site access during winter and spring was on skis. An automated monitoring system, including influent and effluent autosamplers and flumes, would be recommended to allow year-round monitoring. The autosamplers would be housed in smalls sheds and would collect and store bi-monthly samples during the winter and spring months. The flow rates in the influent and effluent flumes would be measured and flow data would be stored on the autosamplers. Samples would be

collected and flow data would be downloaded from the autosamplers every June or July when the Site becomes accessible.

3.2 Alternative 1: 20 gpm Five-Stage Passive Treatment System

The Alternative 1 passive treatment system (PTS) includes five unit processes: a settling basin, BCRs, a mixing basin, an aerobic wetland, and an aeration channel. The design flow rate is 20 gpm which is assumed to be sufficient to treat the baseflow condition from the Level 1 Adit. The general process flow for Alternative 1 is shown on Figure 3. Metal removal would likely occur in the settling basins, BCRs, mixing basin, and the aeration channel. The bulk of the metal removal would occur in the BCRs and the mixing basin. The mixing basin would receive 12 gpm of BCR effluent and 8 gpm of MIW. The mixing basin effluent would flow into a series of aerobic wetlands which would treat the residual nutrients and *E. coli.* generated by the BCR treatment process. The final treatment stage, the aeration channel, would receive water from the mixing basin and provide additional treatment of residual nutrients prior to discharging to Elk Creek.

Location and Design of the Passive Treatment System

The Alternative 1 design and layout is provided on Figure 4. A general description of the settling basin, BCRs, and aeration channel was provided in Section 3.1. Sizing of all unit processes for Alternative 1 is provided in Table 3. Detailed design calculations are provided in Appendix B.

TABLE 3: ALTERNATIVE 1 TREATMENT PROCESS SIZING

Alternative	Settling Pond Area	BCRs Area	Mixing Basin Area	Aeration Channel Length	Wetland Area
	ft^2	ft^2	ft^2	ft	ft^2
Alternative 1 (20 GPM)	1,936	5,000	1,984	1,058	26,650

The BCR effluent would flow into the mixing basin where it would mix with MIW at a ratio of 1.5BCR:1MIW. Based on the results of the mixing study (Golder 2009b), the mixing basin would be sized for a 24-hour detention time. The required mixing basin volume is 340 yd^3 and contains sufficient sludge storage volume to allow sludge removal every five years. The basin would contain several interior concrete walls to promote mixing.

The mixing basin effluent would flow into a series of three aerobic wetland cells. The wetlands cells would contain open water zones and vegetated zones and would provide treatment for residual nutrients and bacteria. Given the high elevation and the short growing season at the Site, the wetland cells would take multiple years to establish mature vegetation. The wetland effluent would discharge to the aeration channel.

A discussion of residual nutrients and bacteria, O&M, BCR media replacement, solids/sludge removal, institutional controls, and long term monitoring is provided in Section 3.1.

Solids/Sludge Removal

In addition to the solids and sludge removal from the settling basin and BCRs discussed in Section 3.1, sludge removal from the mixing basin would also be required. Based on the results of the mixing study (Golder 2009b), the sludge generation rate in the mixing basin is expected to be about 0.5 mL/L of treated water. The mixing basin design includes 78 yd^3 of sludge storage volume which is the equivalent of about five years of sludge storage. The sludge would likely be comprised of organic matter and metal sulfides. The hazardous characteristics of the mixing basin sludge are unknown; pilot testing of the mixing process is recommended to allow further characterization. Sludge removal would be accomplished with a vacuum truck or skid-steer loader.

3.2.1 Criteria Assessment

3.2.1.1 Overall protection of human health and the environment

This alternative would protect human health and the environment by significantly reducing the transport of COCs from the Site to Elk Creek. This alternative would bypass untreated MIW whenever the adit flow rate exceeds the system design flow rate of 20 gpm.

3.2.1.2 Compliance with Applicable or Relevant and Appropriate Requirements (ARARs)

The potential surface water quality ARARs for Elk Creek are provided in Table 2. For the purposes of this document, the compliance point is assumed to be the sampling location Elk-08 (Figure 1).

Predicted PTS Effluent Concentrations

The predicted effluent metals concentrations from the PTS for Alternative 1 (and all other alternatives with a mixing basin as a component, Alternatives 2, 3, and 5) are the same as the mixing basin effluent concentrations measured during the mixing study (Golder 2009b) and are provided in Table 4.

TABLE 4: PREDICTED PTS EFFLUENT COC CONCENTRATIONS AND PERCENT REMOVALS

Target Analyte	Units	Alternatives 1, 2, 3, and 5		Alternative 4	
		Effluent Concentration	Percent Removal	Effluent Concentration	Percent Removal
Cadmium, dissolved	**µg/L**	**0.55**	**99.7%**	<0.13	**99.9%**
Copper, dissolved	**µg/L**	< 2.6	**99.2%**	<2.6	**99.2%**
Lead, dissolved	**µg/L**	**3.0**	**98.5%**	**1.9**	**99.1%**
Zinc, dissolved	**µg/L**	500	**98.2%**	330	**98.8%**

Notes:

-All concentrations are dissolved.

< - concentration was less than the laboratory detection limit.

-NS - no standard.

- Iron removal rates are not provided because the removal rate measured during the mixing study was not consistent with the average removal rate from the first year of pilot operation (Golder 2009a). Although iron removal in a BCR can be inconsistent, consistent iron removal is expected to occur in the pilot aerobic wetland. The upcoming 2009 annual pilot performance report will provide an iron removal rate for the BCR and aerobic wetland. Also, iron is considered a low-priority COC because it does not exceed the water quality standards at Elk-08.
- Manganese concentrations are not provided because the pilot system has not achieved significant manganese removal rates.

concentrations shaded in pink are greater than the acute and chronic standards

concentrations shaded in green are greater than the chronic standard AND less than the acute standard.

If the WQS calculated at hardness 65 mg/L must be met in the PTS effluent with no mixing from Elk Creek, Alternative 1 does not meet ARARs for all contaminants. However, under this scenario:

- The effluent cadmium concentrations are expected to be less than the acute standard
- The effluent copper concentrations are expected to be less than the acute and chronic standards
- The effluent lead concentrations are expected to be less than the acute standard and greater than the chronic standard
- The effluent zinc concentrations are expected to be greater than both the acute and chronic standards

The results of a comparison to WQS calculated at hardness of 100 mg/L shows similar results. Some samples collected in 2009 indicate that concentrations of zinc in the effluent may be less than the results presented here; in other words, zinc removal in the pilot system may be better than indicated by these results. However, those results have not been confirmed and have therefore not been used quantitatively in this report. In addition, it is expected that discharge requirements will need to be met

at Elk-08 measuring station on Elk Creek, and therefore, compliance with ARARs are evaluated at that point.

Predicted Elk-08 Concentrations for Alternative 1

The predicted concentrations in Elk Creek at Elk-08 that might result from implementing Alternative 1 are provided in Table 5 and the calculations are provided in Appendix C. As shown in Appendix C (Table C1), the predicted Elk-08 concentrations were calculated for high-flow conditions based on data collected in June and low-flow conditions based on data collected in September. The predicted Elk-08 concentrations were calculated based on available data including Elk Creek flow rates, Elk Creek metals concentrations, adit discharge flow rates, metal attenuation rates in Elk Creek, and pilot treatment performance. The evaluation assumes that flow rates and metal concentrations in the Level 1 adit discharge remain constant. The calculations should be revisited as more data become available.

Under this alternative, the June concentrations of copper and manganese would be less than acute and chronic standards; cadmium, lead, and zinc concentrations would be greater than potential standards. Calculations of September concentrations indicated that copper, lead, and manganese concentrations will be less than acute and chronic standards. Cadmium and zinc concentrations are calculated to exceed potential standards in September, but as previously mentioned actual zinc concentrations from the BCR may be lower than those used in these calculations and the calculated cadmium and zinc concentrations are essentially at the same level as the standard. It is expected that DO, *E. Coli*, and pH standards would be met at Elk-08.

TABLE 5: ALTERNATIVE 1 PREDICTED ELK-08 CONCENTRATIONS

Target Analyte	Units	ARARs		Alternative 1	
		Acute Standard	Chronic Standard	June Elk-08 Concentration	September Elk-08 Concentration
Cadmium, dissolved	**µg/L**	1.2	0.31	0.82	0.51
Copper, dissolved	**µg/L**	9	6.2	3.5	0.05
Lead, dissolved	**µg/L**	40	1.6	6.9	0.36
Manganese, dissolved	**µg/L**	2590	1430	54	314
Zinc, dissolved	**µg/L**	99	86	**155**	**106**

Notes:

All concentrations are dissolved.

concentrations shaded in pink are greater than the chronic standard

concentrations shaded in green are greater than the acute and chronic standards

Manganese is not removed in the BCR. Although some manganese removal would likely occur in Alternative 1 with an aerobic wetland and aeration channel, the effluent concentration would likely still exceed the WQS. Removal through oxidation would occur once BOD removal is complete and DO levels are high enough to promote oxidation. The manganese concentrations at Elk-08 have been lower than both the acute and chronic WQS during all times of year; therefore, the ability to meet the manganese WQS using a PTS is not expected to be a cause for concern.

The BCR effluent during the first year of operation would contain low concentrations of DO and elevated concentrations of residual nutrients (i.e., BOD, ammonia, phosphorus) and *E. coli*. However, the aerobic wetland and aeration channel would increase concentrations of DO, and decrease concentrations of BOD, ammonia, and phosphorous, The effluent DO concentration for Alternative 1 with a wetland would be expected to meet the standard within several years of startup. DO levels could be increased by installation of waterfall-like structures in an aeration channel. If low DO levels are discharged to Elk Creek, the high-gradient nature and assimilative capacity of the creek would likely minimize the length of Elk Creek that is affected.

The expected *E. coli* concentrations would also potentially exceed the ARAR during the first year of operation. High *E. coli* concentrations could be mitigated by minimizing or eliminating the amount of manure in the BCR media.

Pilot study testing results show that the BCR effluent pH values can be less than the potential discharge requirement of 6.5 s.u., especially during initial operation of the BCR (Golder 2009a). Based on results from the 2009 pilot study testing, the aerobic wetland appears to consistently increase the pH. Based on these results, the Alternative 1 is expected to meet the standard during routine operations. In summary, Alternative 1 has the potential to meet ARARs at Elk-08.

3.2.1.3 Long-term effectiveness and permanence

The residual risk posed by Alternative 1 includes untreated MIW discharge and treatment residuals (i.e., spent BCR media, settling pond sludge, mixing basin sludge). This alternative would discharge untreated MIW whenever the MIW discharge rate exceeds the design flow rate of 20 gpm. The proper handling and disposal of treatment residuals, as discussed in Section 4.0, would be required in order to minimize residual risk. The BCR media, for instance, would be contained within a concrete basin and covered with a geomembrane liner; the media would not be accessible during system operation. During BCR media replacement events, the spent media would be handled appropriately and transported off-Site in an expeditious manner in order to avoid exposure to, or release of, the spent media. The other residuals, namely the settling pond and mixing basin solids, would be removed and disposed of off-Site on a more regular basis (i.e., every five years).

Based on the results of the treatability testing and performance of the technology at other sites, this alternative would likely meet the following performance specifications: overall metal removal rate of 98% and the predicted effluent metal concentrations (Table 4).

As with any water treatment system, long-term operation and maintenance and monitoring would be required as described in Section 4.0. The PTS would be able to function for long periods of time (i.e., winter and spring months) without regular supervision. Annual operation and maintenance tasks would be completed in summer and fall months when the Site is accessible.

3.2.1.4 Reduction of toxicity, mobility, or volume

By removing metals from the MIW, this alternative would reduce the toxicity of the MIW discharged to Elk Creek, and reduce the mobility and volume (mass) of metals within the raw adit MIW. Mass removal quantities for zinc are provided in Section 4.4. This alternative would achieve greater than 98% reduction of cadmium, copper, lead, and zinc for the design flow rate of 20 gpm. The metals would precipitate primarily in the BCR media and mixing basin. With proper operation and maintenance of the system, including replacement of the BCR media, the metal removal would be irreversible. This alternative would generate the following treatment residuals: settling basin solids, BCR media, mixing basin sludge. The residuals would require periodic removal and off-site disposal in a landfill. There is uncertainty over the characteristics of the treatment residuals and whether they would constitute hazardous waste. Fixation of the residuals may be necessary in order to render the residuals non-hazardous and allow disposal in a non-hazardous landfill.

3.2.1.5 Short-term effectiveness

The protection of construction workers would include safeguards against potential residual soil contamination and contaminated MIW. Other Site hazards include altitude-related considerations (i.e., harsh weather conditions, altitude sickness) and a steep and narrow access road. Given the remote location of the Site, the remedial action would not pose any risk to the community of Crested Butte.

The startup period for the BCRs would be approximately two months and consist of a two-week incubation period followed by six weeks of flow increases. During incubation, weekly measurements of BCR effluent would be taken for indicators of sulfate reduction (i.e., DO, ORP, sulfate, sulfide, metals). After positive indicators of sulfate reduction are detected, flow would be initiated to the BCRs. The flow rates would be increased up to the design flow rate over a six-week period. The treatment system would likely achieve the predicted metal removal rate and effluent concentrations upon completion of the startup period. The aerobic wetland, on the other hand, would likely require at least three to five years to reach plant maturity during which time only partial treatment of BOD would be expected.

Other environmental impacts that could result from the implementation of this treatment alternative include the following.

- Release of untreated water during peak flow.
- Visible treatment system at Level 1.
- Disturbance of forested land to construct the aeration channel and new road.

3.2.1.6 Implementability

The construction of Alternative 1 would consist of typical activities such as transport of substrate materials, excavation, grading, concrete placement, trenching, piping, and soil placement in the wetland. Atypical construction activities would include mixing and placement of BCR media. This alternative would also require some excavation of bedrock, especially in the area adjacent to the adit portal and construction in the vicinity of steep slopes. A geotechnical investigation would be required to determine the extent and method of bedrock excavation. Based on the successful construction of the pilot system at the Site as well as multiple full-scale PTSs across the country, the technical feasibility of construction of Alternative 1 has been well-demonstrated. The primary constraint on implementation would be the short construction season (i.e., July through September) at the Site due to the harsh climate. The remote Site location and harsh climate would also restrict monitoring of the Alternative; an automated monitoring system, as described in Section 4.0, would be recommended to permit winter and spring monitoring. The administrative feasibility of this alternative would rely on construction of part of the PTS on USFS land.

3.2.1.7 Cost

The capital and operation and maintenance costs were estimated based on the EPA guidance (EPA 1985) and detailed costs are provided in Appendix A. The following costing assumptions apply to all alternatives:

- The capital costs were divided between direct and indirect costs. The indirect costs for mobilization, scope contingency, bid contingency, engineering, project management, and construction management were based on EPA guidance (EPA, 1985).
- The majority of construction costs were estimated based on RS Means (RSMeans 2009) and actual pilot construction costs. A location adjustment factor of 1.3 was applied to RSMeans costs to account for elevated local construction costs.
- Annual operation and maintenance (O&M) costs were estimated and include operation and maintenance, sampling, laboratory analysis, and reporting. The annual cost for every fifth year includes increased system maintenance (i.e., solids/sludge removal) and a five-year report. The O&M costs assume that the spent BCR media is non-hazardous and would be replaced every 15 years.
- Based on the guidance provided in the EPA *A Guide to Developing and Documenting Cost Estimates During Feasibilty Study* (2000), a discount rate of 7% was used for net present value calculations.

Based on the capital and O&M costs, the net present value for a 30 year period of performance was estimated. The Alternative 1 capital cost is $1,504,000. The net present value for a 30-year period of performance, based on a discount rate of 7%, is $2,005,000.

3.3 Alternative 2: 50 gpm Four-Stage Passive Treatment System

The Alternative 2 treatment system consists of four treatment processes: settling basin, BCRs, mixing basin, and aeration channel. The Alternative 2 design flow rate is 50 gpm and was selected as an intermediate flow rate between Alternative 1 (20 gpm) and Alternative 3 (160 gpm). The general process flow for Alternative 2, provided in Figure 5, differs from Alternative 1 in that it does not include an aerobic wetland. In general, the unit processes for Alternative 2 are larger than those for Alternative 1 due to the higher design flow rate. The Alternative 2 mixing basin ratio would be 1.5BCR:1MIW; the basin would receive 30 gpm of BCR effluent and 20 gpm of MIW.

Location and Design of the Passive Treatment System

The Alternative 2 design and layout is provided on Figure 6. Process sizes are provided in Table 6 and detailed design calculations are provided in Appendix B.

TABLE 6: ALTERNATIVE 2 TREATMENT PROCESS SIZING

Alternative	Settling Pond Area	BCRs Area	Mixing Basin Area	Aeration Channel Length	Wetland Area
	ft^2	ft^2	ft^2	Ft	ft^2
Alternative 2 (50 GPM)	4,096	12,168	4,225	1,366	0

A discussion of residual nutrients and bacteria, O&M, BCR media replacement, solids/sludge removal, institutional controls, and long term monitoring is provided in Section 3.1.

Solids/Sludge Removal

In addition to the solids and sludge removal from the settling basin and BCRs discussed in Section 3.1, sludge removal from the mixing basin would also be required. The sludge removal considerations for Alternative 2 are the same as those provided for Alternative 1 in Section.

3.3.1 Criteria Assessment

This alternative is a PTS with the same metal removal technologies as Alternative 1. As such, the criteria assessment for Alternative 2 is similar to Alternative 1 and comparisons are included in this section for clarity and simplicity.

3.3.1.1 Overall protection of human health and the environment

This alternative would protect human health and the environment by reducing the transport of contaminants from the Site to Elk Creek. This alternative would bypass untreated MIW whenever the adit flow rate exceeds the system design flow rate of 50 gpm.

3.3.1.2 Compliance with ARARs

The potential surface water quality ARARs for Elk Creek are provided in Table 2. This report assumes that compliance with the potential discharge requirements will be measured at Elk-08. The treatment system effluent concentrations prior to mixing with Elk Creek water are provided in Table 4.

Predicted PTS Effluent Concentrations

Under this alternative, the PTS effluent concentrations relative to potential standards are the same as for all other alternatives utilizing a mixing basin (Alternatives 1, 2, 3, and 5), the discussion of which is included within Alternative 1. However, it is expected that discharge requirements will need to be met at Elk-08 measuring station on Elk Creek, and therefore, compliance with ARARs are evaluated at that point.

Predicted Elk-08 Concentrations for Alternative 2

The predicted concentrations under Alternative 2 at sampling location Elk-08 are provided in Table 7 and the calculations are provided in Appendix C. As shown in Appendix C (Table C1), the predicted Elk-08 concentrations were calculated for high-flow conditions based on data collected in June and low-flow conditions based on data collected in September. Under this alternative, the June concentrations of copper, manganese and zinc would be less than the potential standards; cadmium and lead concentrations would be greater than chronic standards and less than acute standards. Calculations of September concentrations indicated that copper, lead, and manganese concentrations will be less than acute and chronic standards. Cadmium and zinc concentrations are calculated to exceed potential standards in September, but as previously mentioned actual zinc concentrations from the BCR may be lower than those used in these calculations and the calculated cadmium and zinc concentrations are essentially at the same level as the standard. It is expected that DO, *E. Coli*, and pH standards would be met at Elk-08.

TABLE 7: ALTERNATIVE 2 PREDICTED ELK-08 CONCENTRATIONS

Target Analyte	Units	ARARs		Alternative 2	
		Acute Standard	Chronic Standard	June Elk-08 Concentration	September Elk-08 Concentration
Cadmium, dissolved	**µg/L**	1.2	0.31	0.40	0.51
Copper, dissolved	**µg/L**	9	6.2	1.6	0.05
Lead, dissolved	**µg/L**	40	1.6	3.9	0.36
Manganese, dissolved	**µg/L**	2590	1430	54	314
Zinc, dissolved	**µg/L**	99	86	85	**107**

Notes:

All concentrations are dissolved.

concentrations shaded in pink are greater than the acute standard

concentrations shaded in green are greater than the acute and chronic standards

Manganese and nutrient removal would likely occur in the PTS due to the aeration channel component, but the overall PTS performance for these constituents may be somewhat less effective than if an aerobic wetland was a component of the system. Space constraints at the site do not allow for a BCR of the size included in Alternative 2 and an aerobic wetlands.

3.3.1.3 Long-term effectiveness and permanence

The residual risk posed by Alternative 2 is similar to Alternative 1 and includes untreated MIW discharge and treatment residuals (i.e., spent BCR media, settling pond sludge, mixing basin sludge). This alternative would discharge untreated MIW whenever the adit discharge rate exceeds the design flow rate of 50 gpm. The residual controls and handling recommendations, ability to meet performance expectations, operation and maintenance requirements, and long-term monitoring requirements are similar to those provided for Alternative 1. The higher design flow rate and larger treatment area of Alternative 2 would result in increased treatment residual volumes and increased higher operation and maintenance requirements.

3.3.1.4 Reduction of toxicity, mobility, or volume

By removing metals from the adit discharge, this alternative would reduce the toxicity of MIW discharged to Elk Creek, and reduce the mobility and volume of the metals in the raw adit MIW. Mass removal quantities for zinc are provided in Section 4.4. This alternative would achieve greater than 98% reduction for cadmium, copper, lead, and zinc for the design flow rate of 50 gpm. The Alternative 2 metal removal processes (i.e., BCR, mixing basin) are identical to Alternative 1, however, Alternative 2 would have a higher design flow rate.

3.3.1.5 Short-term effectiveness

The site hazards, worker safety considerations, and BCR startup time are the same as those for Alternative 1. Unlike Alternative 1, Alternative 2 does not include an aerobic wetland and therefore the lengthy wetland startup period would not apply.

3.3.1.6 Implementability

The implementability of this alternative is similar to Alternative 1. The administrative feasibility of this alternative would also rely on construction on USFS property.

3.3.1.7 Cost

The Alternative 2 capital cost is $1,960,000 and the net present value for a 30-year period of performance, based on a discount rate of 77%, is $2,610,000. A detailed cost estimate is provided in Appendix A and is based on the costing assumptions provided in Section 4.1.7.

3.4 Alternative 3: 160 gpm Four-Stage Passive Treatment System

Similar to Alternative 2, Alternative 3 includes four stages of treatment: settling basin, BCRs, mixing basin, and aeration channel (Figure 5). The design flow rate of 160 gpm is the maximum flow that can be treated in the land area available at the Site. The Alternative 3 mixing basin ratio would be 1.5BCR:1MIW; the basin would receive 96 gpm of BCR effluent and 64 gpm of MIW.

Location and Design of the Passive Treatment System

The Alternative 3 sizing and layout is provided on Figure 7. The sizing of the unit processes is provided in Table 8 and detailed design calculations are provided in Appendix B.

TABLE 8: ALTERNATIVE 3 TREATMENT PROCESS SIZING

Alternative	Settling Pond Area	BCRs Area	Mixing Basin Area	Aeration Channel Length	Wetland Area
	ft^2	ft^2	ft^2	ft	ft^2
Alternative 3 (160 GPM)	11,449	38,206	11,704	1,069	0

A discussion of residual nutrients and bacteria, O&M, BCR media replacement, solids/sludge removal, institutional controls, and long term monitoring is provided in Section 3.1.

Solids/Sludge Removal

In addition to the solids and sludge removal from the settling basin and BCRs discussed in Section 3.1, sludge removal from the mixing basin would also be required. The sludge removal considerations for Alternative 3 are the same as those provided for Alternative 1 in Section 3.2.

3.4.1 Criteria Assessment

3.4.1.1 Overall protection of human health and the environment

This alternative would protect human health and the environment by significantly reducing the transport of contaminants from the Site to Elk Creek. This alternative would bypass untreated MIW whenever the adit flow rate exceeds the system design flow rate of 160 gpm.

3.4.1.2 Compliance with ARARs

The potential surface water quality ARARs for Elk Creek are provided in Table 2. The treatment system effluent concentrations prior to mixing with Elk Creek water are provided in Table 4.

Predicted PTS Effluent Concentrations

Under this alternative, the PTS effluent concentrations relative to potential standards are the same as for all other alternatives utilizing a mixing basin (Alternatives 1, 2, 3, and 5), the discussion of which is included within Alternative 1. However, it is expected that discharge requirements will need to be met at Elk-08 measuring station on Elk Creek, and therefore, compliance with ARARs are evaluated at that point.

Predicted Elk-08 Concentrations for Alternative 3

The predicted concentrations for Alternative 3 at sampling location Elk-08 are provided in Table 9 and the calculations are provided in Appendix C. As shown in Appendix C (Table C1), the predicted Elk-08 concentrations were calculated for high-flow conditions based on data collected in June and low-flow conditions based on data collected in September. Under this alternative, the June concentrations of cadmium, copper, lead, manganese and zinc would be less than acute and chronic standards. Cadmium and zinc concentrations are calculated to exceed potential standards in September, but as previously mentioned actual zinc concentrations from the BCR may be lower than those used in these calculations and the calculated cadmium and zinc concentrations are essentially at the same level as the standard.

TABLE 9: ALTERNATIVE 3 PREDICTED ELK-08 CONCENTRATIONS

Target Analyte	Units	ARARs		Alternative 3	
		Acute Standard	Chronic Standard	June Elk-08 Concentration	September Elk-08 Concentration
Cadmium, dissolved	**µg/L**	1.2	0.31	0.04	0.51
Copper, dissolved	**µg/L**	9	6.2	0.04	0.05
Lead, dissolved	**µg/L**	40	1.6	1.3	0.36
Manganese, dissolved	**µg/L**	2590	1430	54	315
Zinc, dissolved	**µg/L**	99	86	25	**107**

Notes:

All concentrations are dissolved.

concentrations shaded in pink are greater than the acute standard

concentrations shaded in green are greater than the acute and chronic standards

Similar to Alternative 2, manganese and nutrient removal would likely occur in the PTS due to the aeration channel component, but the overall PTS performance for these constituents may be somewhat less effective than if an aerobic wetland was a component of the system. Space constraints at the site do not allow for a BCR of the size included in Alternative 3 and an aerobic wetlands.

3.4.1.3 Long-term effectiveness and permanence

The residual risk posed by Alternative 3 is the similar to Alternatives 1 and 2 and includes untreated adit discharge and treatment residuals (i.e., spent BCR media, settling pond sludge, mixing basin sludge). This alternative would discharge untreated MIW whenever the adit discharge rate exceeds the design flow rate of 160 gpm. The residual controls and handling recommendations, ability to meet performance expectations, operation and maintenance requirements, and long-term monitoring requirements are similar to those provided for Alternatives 1 and 2. The higher design flow rate and larger treatment area of Alternative 3 relative to Alternatives 1 and 2 would result in increased treatment residuals volume and operation and maintenance requirements.

3.4.1.4 Reduction of toxicity, mobility, or volume

By removing metals from the adit discharge, this alternative would reduce the mobility and volume of metals that are discharged to Elk Creek. Mass removal quantities for zinc are provided in Section 4.4. This alternative would achieve greater than 98% reduction for cadmium, copper, lead, and zinc for the design flow rate of 160 gpm. The Alternative 3 metal removal processes (i.e., BCR, mixing

basin) are identical to Alternatives 1 and 2, however, Alternative 3 would have a higher design flow rate.

3.4.1.5 Short-term effectiveness

The site hazards, worker safety considerations, and BCR startup time are the same as those for Alternatives 1 and 2. Unlike Alternative 1, Alternative 3 does not include an aerobic wetland and therefore the lengthy wetland startup period would not apply.

3.4.1.6 Implementability

The implementability of this alternative is similar to Alternatives 1 and 2. The administrative feasibility of this alternative would rely on construction on USFS property.

3.4.1.7 Cost

The Alternative 3 capital cost is $4,368,000 and the net present value for a 30-year period of performance, based on a discount rate of 5%, is $5,381,000. A detailed cost estimate is provided in Appendix A and is based on the costing assumptions provided in Section 4.1.7.

3.5 Alternative 4: 125 gpm Three-Stage Passive Treatment System

Alternative 4 is a three-stage PTS which includes a settling basin, BCRs, and an aeration channel, and is the only alternative that does not include a mixing basin (Figure 8). A mixing basin was excluded in order to have an alternative that is expected to produce an effluent with the lowest effluent COC concentrations of all the alternatives. The treatment flow rate for this alternative is 125 gpm. The disadvantage of eliminating the mixing basin is a lower treatment flow rate than Alternative 3 and potentially higher effluent concentrations of residual nutrients and *E. coli.*

Location and Design of the Passive Treatment System

The Alternative 4 layout and sizing is provided on Figure 9. Unit process sizing is provided in Table 10 and detailed design calculations are provided in Appendix B.

TABLE 10: ALTERNATIVE 4 TREATMENT PROCESS SIZING

Alternative	Settling Pond Area	BCRs Area	Mixing Basin Area	Aeration Channel Length	Wetland Area
	ft^2	ft^2	ft^2	ft	ft^2
Alternative 4 (125 GPM)	9,409	49,923	0	1,061	0

A discussion of residual nutrients and bacteria, O&M, BCR media replacement, solids/sludge removal, institutional controls, and long term monitoring is provided in Section 3.1.

3.5.1 Criteria Assessment

3.5.1.1 Overall protection of human health and the environment

This alternative would protect human health and the environment by significantly reducing the transport of contaminants from the Site to Elk Creek. This alternative would bypass untreated MIW whenever the adit flow rate exceeds the system design flow rate of 125 gpm.

3.5.1.2 Compliance with ARARs

As previously mentioned, ARARs have not yet been formally identified for the site. The potential surface water quality ARARs for Elk Creek are provided in Table 2. The treatment system effluent concentrations prior to mixing with Elk Creek water are provided in Table 4.

Predicted PTS Effluent Concentrations

If the WQS calculated at hardness 65 mg/L must be met in the PTS effluent with no mixing from Elk Creek, Alternative 4 does not meet ARARs for all contaminants. However, under this scenario:

- The effluent cadmium concentrations are expected to be less than the acute and chronic standards.
- The effluent copper concentrations are expected to be less than the acute and chronic standards.
- The effluent lead concentrations are expected to be less than the acute standard and greater than the chronic standard.
- The effluent zinc concentrations are expected to be greater than both the acute and chronic standards.

The results of a comparison to WQS calculated at hardness of 100 mg/L shows similar results. However, it is expected that discharge requirements will need to be met at Elk-08 measuring station on Elk Creek, and therefore, compliance with ARARs are evaluated at that point.

Predicted Elk-08 Concentrations for Alternative 4

The predicted concentrations under Alternative 4 at Elk-08 are provided in Table 11 and the calculations are provided in Appendix C. As shown in Appendix C (Table C1), the predicted Elk-08 concentrations were calculated for high-flow conditions based on data collected in June and low-flow conditions based on data collected in September. Under this alternative, concentrations of cadmium, copper, lead, manganese, and zinc are expected to be less than acute and chronic standards during spring conditions. Cadmium and zinc concentrations in September are calculated to be higher than potential standards. However, actual zinc concentrations from the BCR may be lower than those used in these calculations and the calculated cadmium and zinc concentrations are essentially at the same level as the standard.

TABLE 11: ALTERNATIVE 4 PREDICTED EFFLUENT COC CONCENTRATIONS AT ELK-08

Target Analyte	Units	ARARs		Alternative 4	
		Acute Standard	Chronic Standard	June Elk-08 Concentration	September Elk-08 Concentration
Cadmium, dissolved	**µg/L**	1.2	0.31	0.03	0.49
Copper, dissolved	**µg/L**	9	6.2	0.04	0.05
Lead, dissolved	**µg/L**	40	1.6	1.3	0.33
Manganese, dissolved	**µg/L**	2590	1430	54	315
Zinc, dissolved	**µg/L**	99	86	24	**100**

Notes:

All concentrations are dissolved.

concentrations shaded in pink are greater than the acute standard

concentrations shaded in green are greater than the acute and chronic standards

3.5.1.3 Long-term effectiveness and permanence

The residual risk posed by Alternative 4 would include untreated adit discharge and treatment residuals (i.e., spent BCR media, settling pond sludge). Without a mixing basin, this alternative would not generate any mixing pond sludge. This alternative would discharge untreated MIW whenever the adit discharge rate exceeds the design flow rate of 125 gpm. The residual controls and handling recommendations, ability to meet performance expectations, operation and maintenance requirements, and long-term monitoring requirements are similar to those provided for Alternative 1, 2, and 3. The high design flow rate and large treatment area of this alternative would result in increased treatment residuals volume and operation and maintenance requirements.

3.5.1.4 Reduction of toxicity, mobility, or volume

By removing metals from the adit discharge, this alternative would reduce the mobility and volume of metals that are discharged to Elk Creek. Mass removal quantities for zinc are provided in Section 4.4. This alternative would achieve greater than 99% removal for cadmium, copper, and lead and greater than 98% removal of zinc for the design flow rate of 125 gpm. The COC removal processes (i.e., BCR, mixing basin) are similar to Alternatives 1, 2, and 3, however, Alternative 4 does not include a mixing basin and would have a design flow rate of 125 gpm.

3.5.1.5 Short-term effectiveness

The site hazards, worker safety considerations, and BCR startup time are the same as those for Alternatives 1, 2, and 3. Similar to Alternatives 2 and 3, this alternative would not include an aerobic wetland and therefore the lengthy wetland startup period would not apply.

3.5.1.6 Implementability

The implementability of this alternative is similar to Alternatives 1, 2, and 3. The administrative feasibility of this alternative would rely on construction on USFS property.

3.5.1.7 Cost

The Alternative 4 capital cost estimate is $4,479,000 and the net present value for a 30-year period of performance, based on a discount rate of 77%, is $5,473,000. A detailed cost estimate is provided in Appendix A and is based on the costing assumptions provided in Section 4.1.7.

3.6 Alternative 5: 20 gpm Four-Stage Passive Treatment System on non-USFS Land

Alternative 5 is a four-stage PTS which includes a settling basin, BCRs, a mixing basin, and an aeration channel and is the only alternative that does not require construction on USFS property. The Alternative 5 design flow rate is 20 gpm. The process flow diagram for this alternative is provided in Figure 5. Alternative 5 has the same flow rate and unit process dimensions as Alternative 1 for the settling basin, BCRs, and mixing pond. However, in order to minimize the footprint and thereby avoid construction on USFS, Alternative 5 does not include an aerobic wetland. Without an aerobic wetland, the Alternative 5 effluent would contain higher concentrations of residual nutrients than Alternative 1. The advantage of Alternative 5 is a smaller footprint that excludes USFS property and a lower capital cost.

Location and Design of the Passive Treatment System

The Alternative 5 layout and sizing is provided on Figure 10. Unit process sizing is provided in Table 12 and detailed design calculations are provided in Appendix B.

TABLE 12: ALTERNATIVE 5 TREATMENT PROCESS SIZING

Alternative	Settling Pond Area	BCRs Area	Mixing Basin Area	Aeration Channel Length	Wetland Area
	ft^2	ft^2	ft^2	ft	ft^2
Alternative 5 (20 GPM)	1,936	5,000	1,984	1,058	0

A discussion of residual nutrients and bacteria, O&M, BCR media replacement, solids/sludge removal, institutional controls, and long term monitoring is provided in Section 3.1.

Solids/Sludge Removal

In addition to the solids and sludge removal from the settling basin and BCRs discussed in Section 3.1, sludge removal from the mixing basin would also be required. The mixing basin sludge removal considerations for Alternative 5 are the same as those provided for Alternative 1 in Section 3.2.

3.6.1 Criteria Assessment

3.6.1.1 Overall protection of human health and the environment

This alternative would protect human health and the environment by significantly reducing the transport of contaminants from the Site to Elk Creek. This alternative would bypass untreated MIW whenever the adit flow rate exceeds the system design flow rate of 20 gpm.

3.6.1.2 Compliance with ARARs

The potential surface water quality ARARs for Elk Creek are provided in Table 2. The treatment system effluent concentrations prior to mixing with Elk Creek water are provided in Table 4.

Predicted PTS Effluent Concentrations

Under this alternative, the PTS effluent concentrations relative to potential standards are the same as for all other alternatives utilizing a mixing basin (Alternatives 1, 2, 3, and 5), the discussion of which is included within Alternative 1. However, it is expected that discharge requirements will need to be met at Elk-08 measuring station on Elk Creek, and therefore, compliance with ARARs are evaluated at that point.

Predicted Elk-08 Concentrations for Alternative 5

The predicted concentrations under Alternative 5 at Elk-08 are provided in Table 13 and the calculations are provided in Appendix C. As shown in Appendix C (Table C1), the predicted Elk-08 concentrations were calculated for high-flow conditions based on data collected in June and low-flow conditions based on data collected in September. Under this alternative, the June concentrations of copper and manganese would be less than the potential standards; cadmium, lead, and zinc would be greater than the potential standards. Calculations of September concentrations indicated that copper, lead, and manganese will be less than the potential standards. Cadmium and zinc concentrations are calculated to exceed potential standards in September, but as previously mentioned actual zinc concentrations from the BCR may be lower than those used in these calculations and the calculated cadmium and zinc concentrations are essentially at the same level as the standard.

TABLE 13: ALTERNATIVE 5 PREDICTED EFFLUENT COC CONCENTRATIONS AT ELK-08

Target Analyte	Units	ARARs		Alternative 5	
		Acute Standard	Chronic Standard	June Elk-08 Concentration	September Elk-08 Concentration
Cadmium, dissolved	**µg/L**	1.2	0.31	0.82	0.51
Copper, dissolved	**µg/L**	9	6.2	3.5	0.05
Lead, dissolved	**µg/L**	40	1.6	6.9	0.36
Manganese, dissolved	**µg/L**	2590	1430	54	315
Zinc, dissolved	**µg/L**	99	86	**155**	**107**

Notes:

All concentrations are dissolved.

concentrations shaded in pink are greater than the acute standard

concentrations shaded in green are greater than the acute and chronic standards

3.6.1.3 Long-term effectiveness and permanence

The residual risk posed by Alternative 5 includes untreated adit discharge and treatment residuals (i.e., spent BCR media, settling pond sludge, mixing basin sludge). This alternative would discharge untreated MIW whenever the adit discharge rate exceeds the design flow rate of 20 gpm. The residual controls and handling recommendations, ability to meet performance expectations, operation and maintenance requirements, and long-term monitoring requirements are similar to those provided for the other alternatives.

3.6.1.4 Reduction of toxicity, mobility, or volume

By removing metals from the adit discharge, this alternative would reduce the mobility and volume of metals that are discharged to Elk Creek. Mass removal quantities for zinc are provided in Section 4.4. This alternative would achieve greater than 98% reduction of cadmium, copper, lead, and zinc for the design flow rate of 20 gpm. The Alternative 5 metal removal processes (i.e., BCR, mixing basin) are identical to Alternatives 1, 2, and 3.

3.6.1.5 Short-term effectiveness

The site hazards, worker safety considerations, and BCR startup time are the same as those provided for the other alternatives.

3.6.1.6 Implementability

The technical implementability of this alternative is similar to the other alternatives. In terms of administrative feasibility, this alternative will not require construction on USFS property.

3.6.1.7 Cost

The Alternative 5 capital cost is $1,195,000 and the net present value for a 30-year period of performance, based on a discount rate of 7%, is $1,696,000. A detailed cost estimate is provided in Appendix A and is based on the costing assumptions provided in Section 4.1.7.

4.0 COMPARATIVE ANALYSIS

This section provides a comparative analysis of the remedial alternatives based on the seven evaluation criteria. Each alternative has been evaluated and ranked in accordance with Section 6.2.3 of the EPA *Guidance for Conducting Remedial Investigations and Feasibility Studies under CERCLA* (EPA 1988).

4.1 Overall protection of human health and the environment

All five alternatives would provide protection of human health and environment by reducing the transport of COCs from the Site to Elk Creek. All of the alternatives are multi-process passive treatment systems which would remove metals in the BCR process. Adit mine water that may need to be diverted directly to Elk Creek during high spring flow conditions (possibly for all alternatives) is considered to be diluted by Elk Creek. All alternatives are considered protective because they reduce concentrations of metals in the MIW to the extent acceptable to support a trout fishery in Elk Creek at some point downstream from the discharge point, and alternatives do not affect Crested Butte's capability to continue to use Coal Creek as a source of drinking water.

4.2 Compliance with ARARs

If the published discharge standards for Elk Creek (CDPHE, 2007) are identified as ARARs that have to be met at the *point of discharge*, none of the alternatives meet ARARs for all contaminants. However, it is expected that discharge requirements will need to be met at Elk-08 measuring station on Elk Creek, and therefore, compliance with ARARs was evaluated at that point.

The estimate of metal loading at Elk-08 indicates that the WQS for cadmium, copper, lead, manganese, and zinc can be met by some alternatives during high flow periods. During low flow periods, cadmium and zinc concentrations are calculated to be greater than standards. However, actual zinc concentrations from the BCR may be lower than those used in these calculations because comparison of the data used to estimate the expected effluent metal concentrations from a PTS with duplicate data from a different laboratory indicate that the data used in this analysis may be high for zinc. In addition, calculated cadmium and zinc concentrations are essentially at the same level as the standards. The calculated concentrations at Elk-08 have used average stream flows and concentrations as inputs, which are probably not reflective of actual conditions at all times. Reasonably conservative assumptions using professional judgment have been made in the determination of concentrations at Elk-08.

Metals removal greater than that seen in the pilot system could occur. First, the percent metals removal could increase if the flow from the adit into the reactor is lower than the design flow rate thereby increasing the retention time in the BCR. The effluent metal concentrations would decrease during periods when the BCR is not operating at full capacity. This has not been proven in full-scale operations and the magnitude of the effect is unknown.

It is expected that DO, *E. Coli*, and pH standards would be met at Elk-08.

The ability of a PTS to discharge water that meets WQS depends on how soon after startup the standards need to be met. This is primarily a concern for pH, residual nutrients (i.e., BOD, ammonia, phosphorus) and *E. coli*. During the first year of operation the elevated BOD concentrations in the PTS effluent would likely result in DO levels less than the ARAR of 6 mg/L even in a system with a wetland. The expected *E. coli* concentrations in the PTS effluent during the first year of operation would also likely exceed the ARAR. It is expected that these standards would be met at Elk-08 once the system reaches steady-state conditions.

If the planned phased approach for site remediation includes source control measures which result in a decrease in adit flow rates or metal concentrations, the PTS alternatives should be revisited in order revise the predicted Elk-08 concentrations. A decrease in adit flow rate would decrease the predicted Elk-08 concentrations. If, for example, source control measures decrease the high-flow adit discharge rate to less than 10 gpm, all of the alternatives would have same level of compliance under both high and low flow conditions.

4.3 Long-term effectiveness and permanence

All of the alternatives have the same residual risks: untreated adit discharge and treatment residuals. The amount of untreated MIW is a function of the design flow rate; the lowest design flow rate would coincide with the highest untreated MIW discharge. Conversely, the highest flow rate would minimize the residual risk posed by untreated MIW discharge. In terms of treatment residuals, the alternatives would generate the same types of residuals (i.e., settling pond sludge, spent BCR media, mixing basin sludge). The only exception would be Alternative 4, which does not include a mixing basin and would only generate settling basin solids and spent BCR media. The larger systems, such as Alternatives 3 and 4, would generate more residuals than the smaller systems. The proper handling and disposal of treatment residuals, as discussed in Section 4.1, would be required in order to minimize residual risk.

Other significant issues include potential decreased treatment performance in the long-term, ability to handle fluctuation in adit flow rate, and cold-weather performance. Although the pilot study has produced consistent treatment results over the course of three years, it is possible that the metal removal rates could decrease over the estimated 15-year lifespan of the BCR media. To our knowledge, there are no published, comprehensive long-term studies of BCR metal removal. Two factors that could affect long-term BCR performance are plugging and decreased biological activity. Plugging of the BCR could occur if influent concentrations of suspended solids, iron, or aluminum increase significantly or are not effectively removed in the settling basin prior to the BCR. Decreased biological activity could occur if the degradation of the BCR media does not provide sufficient nutrients (i.e., nitrogen, phosphorus) to maintain the sulfate reduction rates observed to date in the pilot system (Place et al. 2006).

The PTS alternatives would be able to handle fluctuations in adit flow rate as has been demonstrated in the pilot system (Golder 2009a). Adit flows above the PTS design flow rate would be diverted to Elk Creek. Adit flows below the design flow rate, or periods of no flow, have not significantly affected metal removal rates (Golder 2009a). Metal removal rates have also remained consistent in cold winter months when the adit water temperature is as low as approximately 1º Celsius. The pilot BCR design, which includes a wood chip cover and geomembrane cap, has allowed continuous year-round operation without any freezing issues.

Based on the results of the treatability testing and performance of the technology at other sites, the alternatives would likely meet the following performance specifications:

- Alternatives 1, 2, 3, and 5 would achieve cadmium, copper, lead, and zinc removal rates greater than 98%, and
- Alternative 4 would achieve cadmium, copper, and lead removal rates greater than 99% and a zinc removal rate greater than 98%.

As with any water treatment system, long-term O&M and monitoring would be required as described in Section 3.1. The PTS would be able to function for long periods of time (i.e., winter and spring months) without direct supervision. Annual operation and maintenance tasks would be completed in the summer and fall months when the Site is accessible.

The primary determinant of long-term effectiveness and permanence is the ability to limit untreated discharge from the Site. Correspondingly, the alternatives were ranked based on flow rate; the high design flow alternatives were given a high ranking and the low flow alternatives were given a low ranking.

TABLE 14: COMPARISON OF TREATMENT ALTERNATIVES: LONG-TERM EFFECTIVENESS AND PERMANENCE

High	Medium	Low
Alternatives 3 (160 gpm) and 4 (125 gpm no mixing basin)	Alternative 2 (50 gpm)	Alternatives 1 (20 gpm) and 5 (20 gpm, non-USFS)

4.4 Reduction of toxicity, mobility, or volume through treatment

All of the alternatives would reduce the mobility and volume of the COC's that currently discharge from the Site. The alternatives all rely on the BCR process to immobilize the COCs and most of the alternatives also include a mixing basin for additional COC removal. In general, the high flow alternatives would provide the greatest reduction in the mobility and volume of metals discharged and the low flow alternatives would provide the least amount of reduction. A comparative analysis was conducted to determine annual metal mass removal rates based on the following assumptions:

- Flow rate – based on the available adit flow data, the annual flow rates were divided into three periods: a high flow period with a flow rate of 200 gpm and a duration of 1

month, a medium flow period with a flow rate of 30 gpm and a duration of 3 months, and a low flow period with a flow rate of 10 gpm and a duration of 8 months.

- Metal concentrations – The metal concentrations measured during the mixing study (Golder 2009b) were used in the mass removal calculations. The calculations are provided in Appendix D.

The annual mass removal rates are provided in Table 15. As expected, the high flow alternatives (i.e., Alternatives 3 and 4), would have the higher mass removal rates and were therefore assigned a high ranking (Table 16). The low flow alternatives (i.e., Alternatives 1 and 5) would have the lower mass removal rates and were assigned a low ranking.

TABLE 15: ANNUAL METAL MASS REMOVAL RATES

Alternative	Units	Cadmium	Copper	Lead	Zinc
Alternative 1	Lbs/year	8	15	29	1,525
Alternative 2	Lbs/year	11.2	21	40	2,097
Alternative 3	Lbs/year	17	30	58	3,128
Alternative 4	Lbs/year	15	27	52	2,807
Alternative 5	Lbs/year	8	15	29	1,525

TABLE 16: COMPARISION OF TREATMENT ALTERNATIVES: REDUCTION OF TOXICITY, MOBILITY, AND VOLUME THROUGH TREATMENT

High	Medium	Low
Alternatives 3 (160 gpm) and 4 (125 gpm, no mixing basin)	Alternative 2 (55 gpm)	Alternatives 1 (20 gpm) and 5 (20 gpm, non-USFS)

4.5 Short-term effectiveness

In terms of protection of construction workers, site hazards, and risks to the local community associated with construction, the alternatives are all similar. The treatment system startup periods for all alternatives are also similar. The exception would be the lengthy startup period required for the aerobic wetland included in Alternative 1. The purpose of the wetland is to treat residual nutrients; the metal removal rates for Alternative 1 would not be affected during the wetland startup period.

Other environmental impacts that could result from the implementation of a PTS system include the following.

- Release of untreated water during peak flow.
- Visible treatment system at Level 1.
- Disturbance of forested land to construct the aeration channel and new road.

TABLE 17: COMPARISON OF TREATMENT ALTERNATIVES: SHORT-TERM EFFECTIVENESS

High	Medium	Low
Alternatives 1 (20 gpm), 2 (55 gpm), 3 (160 gpm), 4 (125 gpm, no mixing basin), 5 (20 gpm, non-USFS)		

4.6 Implementability

The implementability of the alternatives is similar; constraints on the implementability include construction on USFS property, a short construction season, a harsh site climate, and difficult site access. Alternative 5 was given a high ranking because it does not require construction on USFS property. The remainder of the alternatives was given a medium ranking because they would require construction on USFS property. Alternative 1, 2, and 5 would likely be constructed in a single construction season while the larger alternatives (i.e., Alternatives 3 and 4) would likely require two constructions seasons.

All of the alternatives would require some excavation of bedrock, especially in the area adjacent to the adit portal and construction in the vicinity of steep slopes. A geotechnical investigation would be required to determine the extent and method of bedrock excavation.

TABLE 18: COMPARISON OF TREATMENT ALTERNATIVES: IMPLEMENTABILITY

High	Medium	Low
Alternative 5 (20 gpm, non-USFS)	Alternatives 1 (20 gpm), 2 (55 gpm), 3 (160 gpm), 4 (125 gpm, no mixing basin)	

4.7 Cost

The capital and 30-year period of performance cost estimates are provided in Table 15. As expected, the costs are positively correlated with design flow; the high flow systems with the largest footprint have substantially higher costs than the low flow systems. The alternatives were ranked inversely with respect to cost; the low-cost alternatives have a high ranking while the high-cost alternatives have a low ranking (Table 16).

TABLE 19: CAPITAL AND 30-YEAR PERIOD OF PERFORMANCE COSTS

Alternatives	Total Capital Cost	30-year Period of Performance Net Present Value
Alternative 1 (20 gpm)	$1,504,000	$2,005,000
Alternative 2 (55 gpm)	$1,960,000	$2,610,000
Alternative 3 (160 gpm)	$4,368,000	$5,381,000
Alternative 4 (125 gpm, no mixing basin)	$4,479,000	$5,473,000
Alternative 5 (20 gpm, non-USFS)	$1,195,000	$1,696,000

TABLE 20: COMPARISON OF TREATMENT ALTERNATIVES: COST

High Ranking (Low Cost)	Medium Ranking (Medium Cost)	Low Ranking (High Cost)
Alternatives 1 (20 gpm) and 5 (20 gpm, non-USFS)	Alternative 2 (55 gpm)	Alternatives 3 (160 gpm) and 4 (125 gpm, no mixing basin)

4.8 Summary comparison of remedial alternatives

In general, the alternatives are similar because they all consist of essentially the same treatment technology with similar treatment efficiency (i.e., metal removal rates). The most important attribute appears to be design flow rate which is a primary factor for three of the seven criteria (i.e., protection of human health and environment, long-term effectiveness and permanence, reduction of toxicity, mobility, and volume through treatment). If the published discharge standards for Elk Creek (CDPHE, 2007) are identified as ARARs that have to be met at the *point of discharge*, none of the alternatives meet ARARs. However, if these standards are applied at Elk-08, the alternatives would comply with some or most of the potential discharge standards. As detailed in Appendix C, the predicted Elk-08 concentrations were calculated based on available data including Elk Creek flow rates, Elk Creek metals concentrations, adit discharge flow rates, metal attenuation rates in Elk Creek, and pilot treatment performance. The calculations should be revisited as more data become available.

5.0 REFERENCES

Colorado Department of Public Health and Environment (CDPHE). 2007. Regulation 35 - Classifications and Numeric Standards for Gunnison and Lower Dolores River Basins (amended 2/12/07, effective 7/1/07).

EPA. October 1998. *Guidance for Conducting Remedial Investigations and Feasibility Studies Under CERCLA.* Washington, D.C EPA Report #540/G-89/004; OSWER Directive 9355.3-01

EPA. July 2000. *A Guide to Developing and Documenting Cost Estimates During the Feasibility Study.* Washington, D.C. EPA 540-R-00-002 OSWER 9355.0-75.

EPA. September 2000. *Constructed Wetlands Treatment of Municipal Wastewaters*. Cincinnati, OH. EPA Report #625/R-99/010

Golder Associates, Inc. (Golder). 2007. *Final Report Water Treatability Study, Golinsky Mine, Lake Shasta, California*. Denver, Colorado.

Golder Associates Inc. (Golder). 2009a. *Standard Mine Pilot Passive Treatment System Operations and Results for 2007 and 2008.* Denver, CO.

Golder Associates Inc. (Golder). 2009b. *Final Biochemical Reactor Mixing Study Report Standard Mine Superfund Site Crested Butte, CO*. Denver, CO.

Gusek, J. J. and T. R. Wildeman. 2002. *A New Millennium of Passive Treatment of Acid Rock Drainage: Advances in Design and Construction Since 1988.* Proceedings of the 2002 National Meeting of the American Society for Mining and Reclamation, June 9-13, 2002 in Lexington, Kentucky. Published by ASMR, 3134 Montavesta Rd., Lexington, KY 40502

Gusek, J.J., and J. Schueck, 2004. *Bench and Pilot Scale Test Results Passive Treatment of Acid Mine Drainage (AMD) at the Fran Coal Mine, PA*. Presented at the Tailings and Mine Waste 2004, Vail, Colorado, October 10-13, 2004.

Gusek, J., T. Rutkowski, E. Blumenstein, B. Shipley. 2008. *Two-year Sulfate Reducing Bioreactor Pilot Test at the Golinsky Mine, California.* Proceeding of the 2008 American Society of Mining and Reclamation Conference. Richmond, Virginia. Published by ASMR, 3134 Montavesta Rd., Lexington KY 40502.

Knight Piesold. 2001. *Wyoming Department of Environmental Quality Abandoned Mine Land Division Ferris-Haggarty/Osceola Tunnel Drainage Study Winter 1999/2000 and 2000 Field Season Report.* Denver, CO.

Place, D.L., L. Figueroa, T. Wildeman, D. Reisman. 2006. *Characterizing and Tracking Reactive Mixture Alterations: New Tools for Passive Treatment System Design and Monitoring.* Proceeding of the Seventh International Conference on Acid Rock Drainage (ICARD), St. Louis, Missouri. Published by ASMR, 3134 Montavesta Rd., Lexington KY 40502.

Rose, A.W. 2004. *Vertical Flow Systems – Effects of Time and Acidity Relations.* Proceedings of 2004 National Meeting of the American Society of Mining and Reclamation, Morgantown, West Virginia, April 18-24, 2004. Published by ASMR, 3134 Montavesta Rd., Lexington KY 40502.

Reisman, D., T. Rutkowski, P. Smart, J.J. Gusek. 2008. *The Construction and Instrumentation of a Pilot Treatment System at Standard Mine Superfund Site, Crested Butte, CO.* Proceedings of 2008 National Meeting of the American Society of Mining and Reclamation, Richmond, VA, June 14-19, 2008.

Reisman, D., T. Rutkowski, P. Smart, J.J. Gusek. 2009. *Passive Treatment and Monitoring at Standard Mine Superfund Site, Crested Butte, CO.* Proceedings of 2008 National Meeting of the American Society of Mining and Reclamation, Richmond, VA, June 14-19, 2008.

RS Means. *2009 Heavy Construction Cost Data, 23rd Annual Edition.* Construction Publishers & Consultants. Kingston, MA.

Strosnider, W.H., B.K. Winfrey, R.W. Nairn, 2009. Performance of an Ecologically-Engineered Multi-Stage Acid Mine Drainage and Municipal Wastewater Passive Co-Treatment System. Proceeding of the 2009 American Society of Mining and Reclamation Conference. Billings, Montana. Published by ASMR, 3134 Montavesta Rd., Lexington KY 40502.

Thomas, R.C. 2002. *Passive Treatment of Low pH, Ferric Iron-Dominated Acid Rock Drainage.* Doctoral Thesis. University of Georgia.

FIGURES

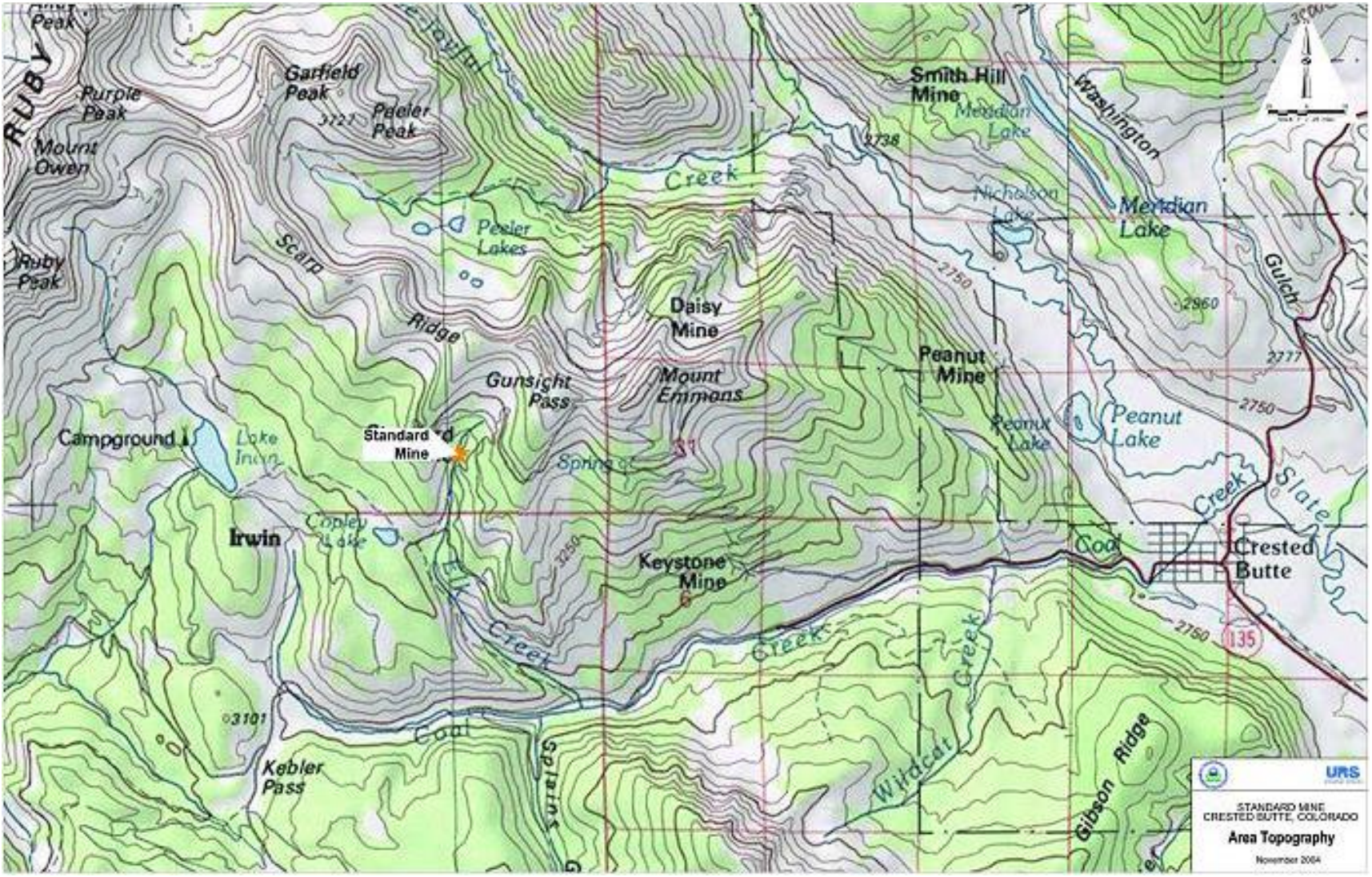

Topographic map provided by URS Inc.

Golder Associates Denver, Colorado	TITLE Site Location			
CLIENT/PROJECT EPA STANDARD MINE PILOT SCALE PASSIVE TREATMENT	DRAWN PCS	DATE 9/8/2009	JOB NO. 093-81796	
	CHECKED TLR	SCALE Not To Scale	DWG. NO.	
	REVIEWED JJG	FILE NO. J:\08JOBS\083-81817 Standard Mine\Mixing Study\FNL RPT Figure 1.vsd	FIGURE NO. 1	

Map Document: M:\SuperFunMine\ArcMap\SystemGPM\11x17_SystemLayout_AvailableArea.mxd / Modified 4/7/2010 1:27:34 PM / Plotted 4/7/2010 1:27:34 PM by aratke

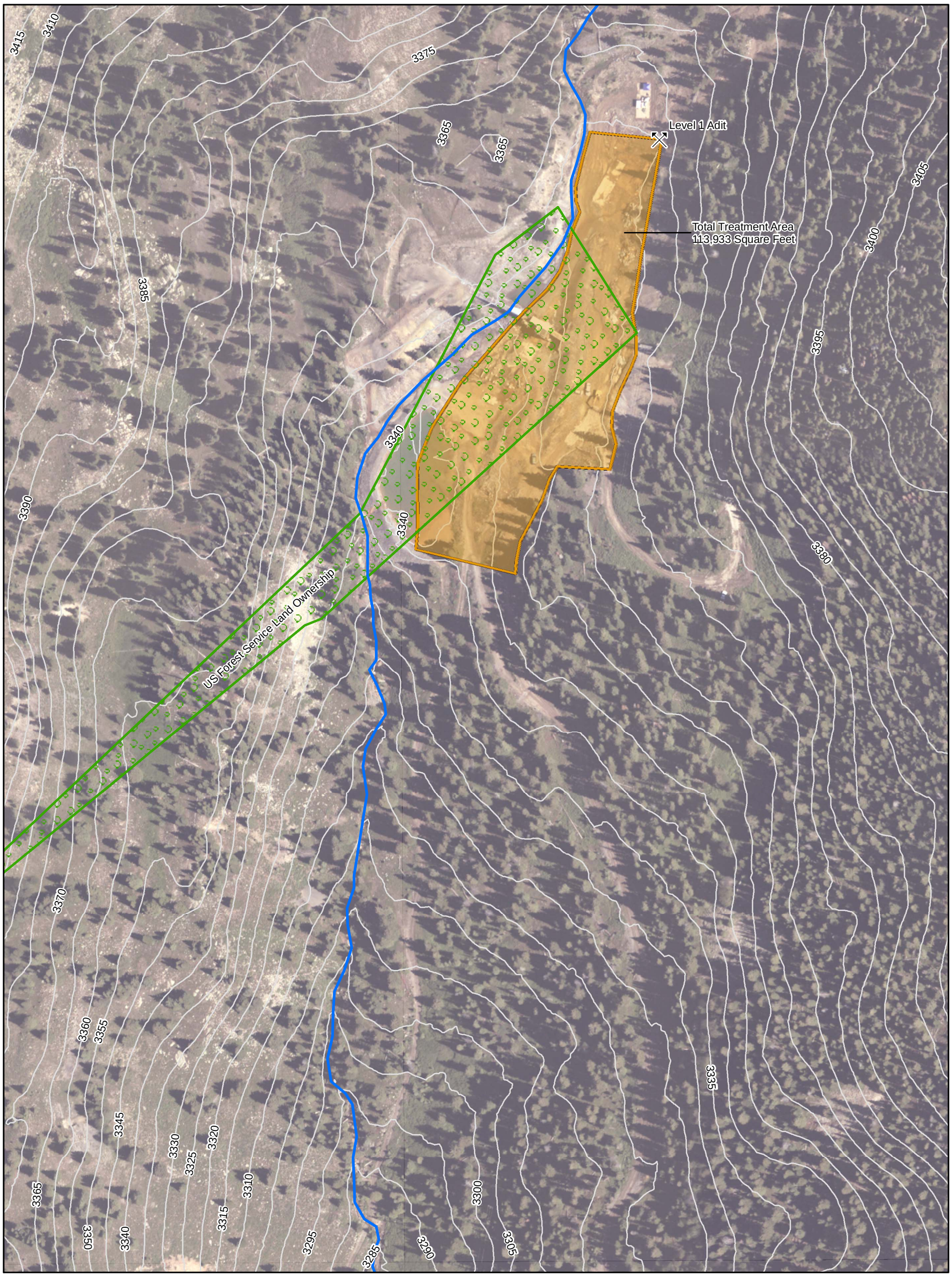

150 75 0 150 FEET

SCALE 1:1,800 1 INCH = 150 FEET
WHEN PRODUCED AT SIZE 11X17IN

N

LEGEND

- Level 1 Adit
- Elk Creek
- Contour - 5 Meter Interval
- Total Treatment Area
- US Forest Service Land Ownership

NOTE

This figure prepared for Pacific Western Technologies Ltd.

REFERENCES

Aerial Imagery, Contours, Survey Data: UOS Inc., Recieved August 2009.
Projection: StatePlane, Colorado Central, NAD83, Feet.

PROJECT

PACIFIC WESTERN TECHNOLOGIES LTD.
STANDARD MINE SUPER FUND SITE
CRESTED BUTTE, CO

TITLE

LAND AREA AVAILABLE FOR REMEDIAL ALTERNATIVES

Golder Associates
Denver, Colorado

PROJECT No.		093-81796	FILE No.	SystemLayout_AvailableArea.mxd
DESIGN	PS	09/21/2009	SCALE AS SHOWN	REV 0
GIS	AR	09/21/2009	FIGURE 2	
CHECK	PS	09/21/2009		
REVIEW	TR	10/14/2009		

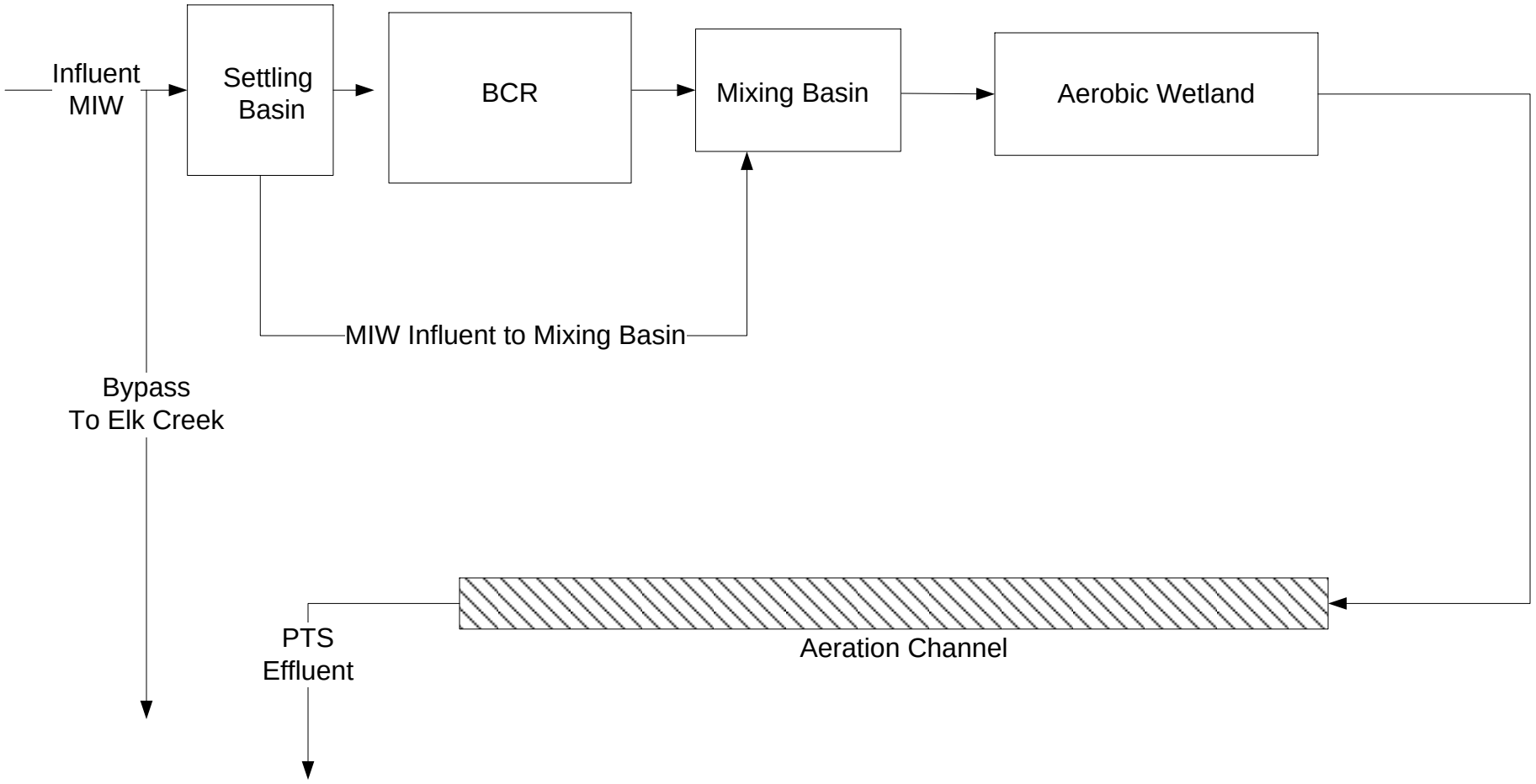

Note: Figure not to scale
Figure prepared for Pacific Western Technologies Ltd.

Golder Associates Denver, Colorado

TITLE

Process Flow Diagram for Alternative 1

CLIENT/PROJECT

Standard Mine Superfund Site
Feasibility Study Report

DRAWN	PCS	DATE	4/7/2010	JOB NO.	093-81796
CHECKED	TLR	SCALE	Not To Scale	DWG. NO.	NA
REVIEWED	JJG	FILE NO.	NA	FIGURE NO.	3

Map Document: M:\SuperFunMine\ArcMap\SystemGPM\11x17_SystemLayout_20gpmVertical.mxd / Modified 4/7/2010 1:09:18 PM / Plotted 4/7/2010 1:09:18 PM by aratke

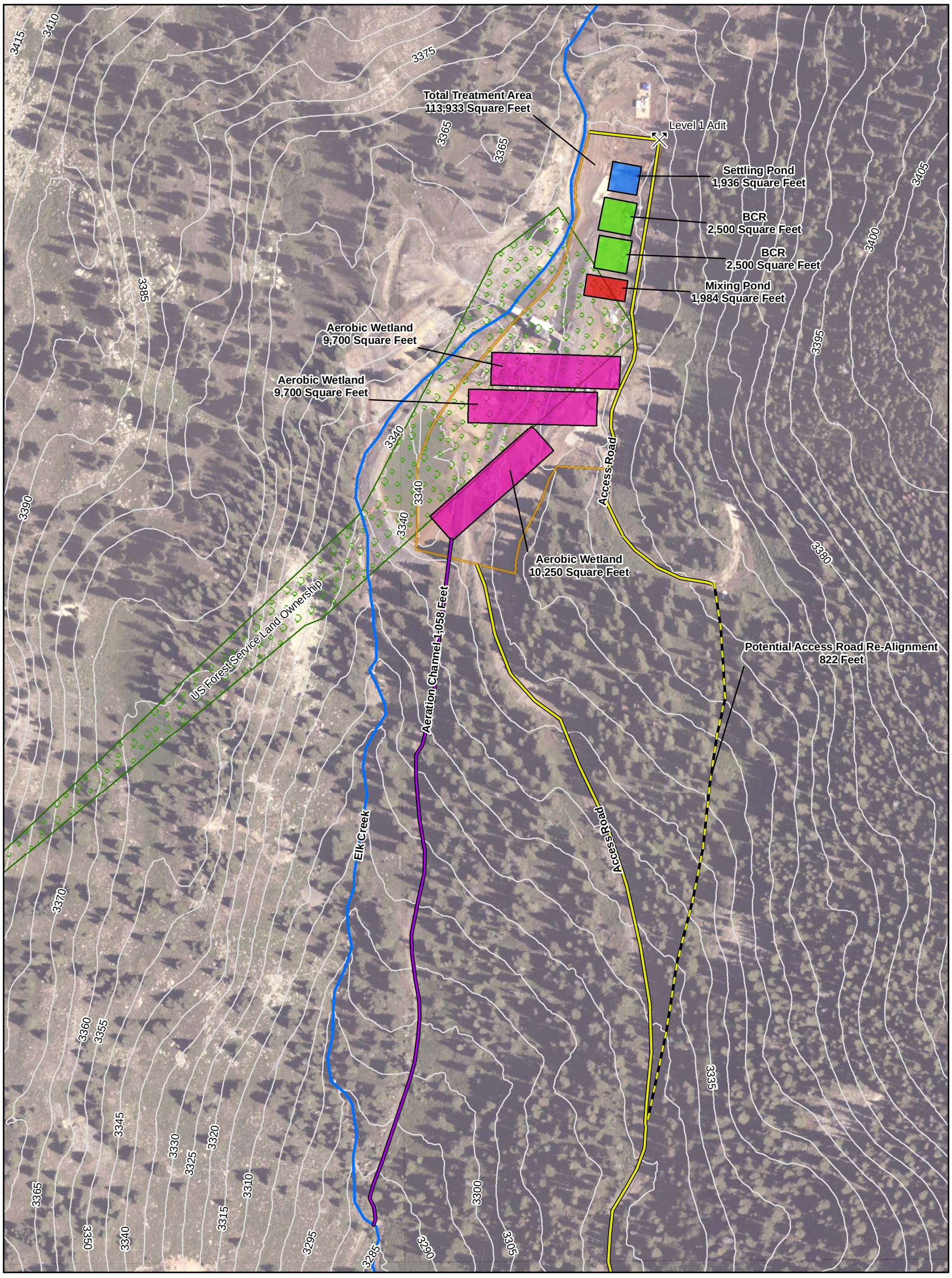

150 75 0 150 FEET

SCALE 1:1,800 1 INCH = 150 FEET
WHEN PRODUCED AT SIZE 11X17IN

N

LEGEND

- Level 1 Adit
- Aeration Channel
- Potential Access Road Re-Alignment
- Existing Access Road
- Elk Creek
- Contour - 5 Meter Interval
- Aerobic Wetlands
- Total Treatment Area
- BCR
- Mixing Pond
- Settling Pond
- US Forest Service Land Ownership

NOTE

This figure prepared for Pacific Western Technologies Ltd.

REFERENCES

20 GPM Layout: Golder, 2009.
Aerial Imagery, Contours, Survey Data: UOS Inc., Recieved August 2009.
Projection: StatePlane, Colorado Central, NAD83, Feet.

PROJECT

PACIFIC WESTERN TECHNOLOGIES LTD.
STANDARD MINE SUPER FUND SITE
CRESTED BUTTE, CO

TITLE

ALTERNATIVE 1
(20 GPM) SIZING AND LAYOUT

Golder Associates
Denver, Colorado

PROJECT No.		093-81796	FILE No. SystemLayout_20GPMVertical.mxd	
DESIGN	PS	09/21/2009	SCALE AS SHOWN	REV 0
GIS	AR	09/21/2009	FIGURE 4	
CHECK	PS	09/21/2009		
REVIEW	TR	10/14/2009		

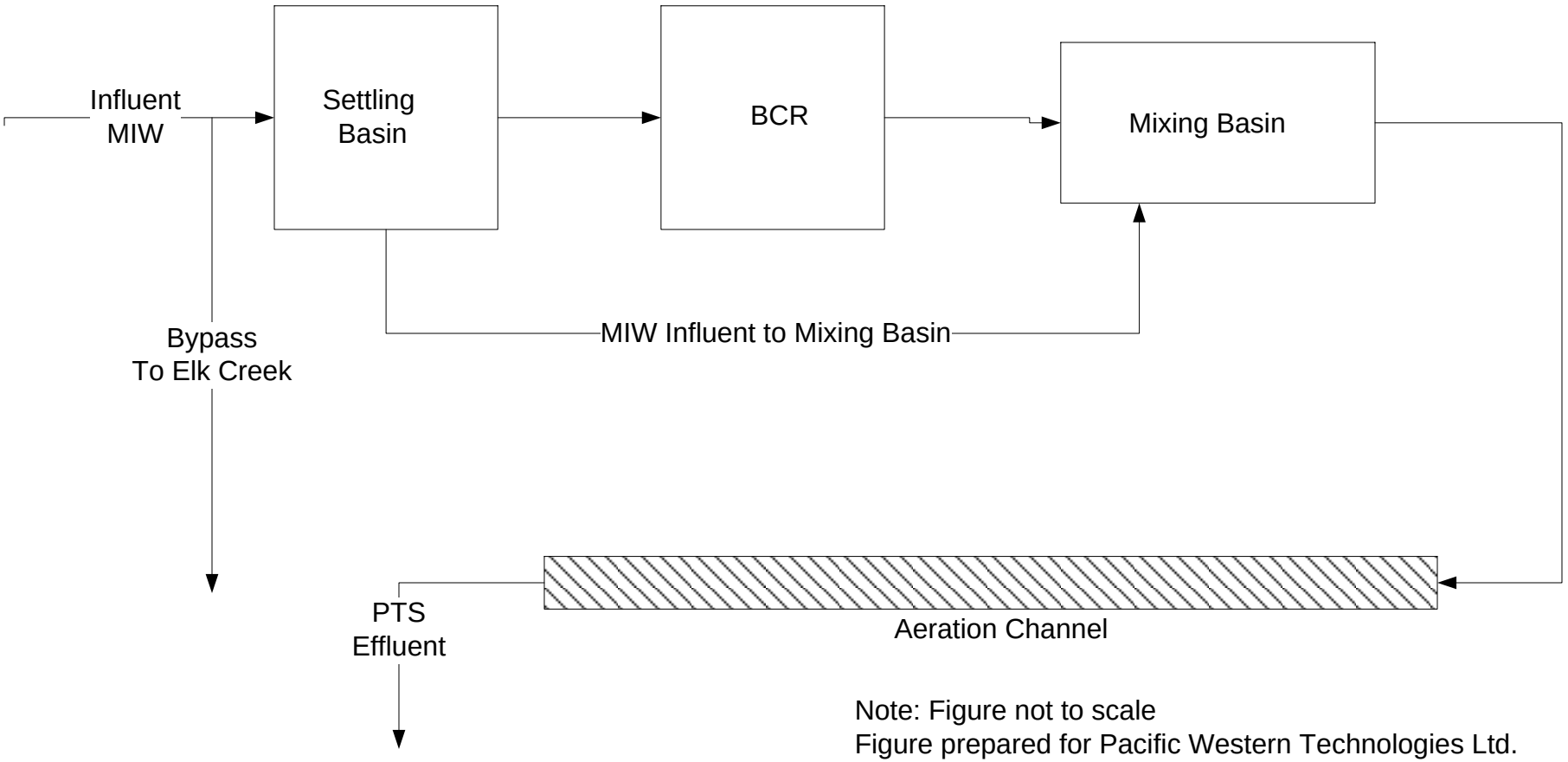

Note: Figure not to scale
Figure prepared for Pacific Western Technologies Ltd.

Golder Associates
Denver, Colorado

TITLE
Process Flow Diagram for Alternatives 2, 3, and 5

CLIENT/PROJECT
Standard Mine Superfund Site
Feasibility Study Report

DRAWN	PCS	DATE	4/7/2010	JOB NO.	093-81796
CHECKED	TLR	SCALE	Not To Scale	DWG. NO.	NA
REVIEWED	JJG	FILE NO.	NA	FIGURE NO.	5

Map Document: M:\SuperFunMine\ArcMap\SystemGPM\11x17_SystemLayout_50gpmVertical.mxd / Modified 4/7/2010 1:14:49 PM / Plotted 4/7/2010 1:14:49 PM by aratke

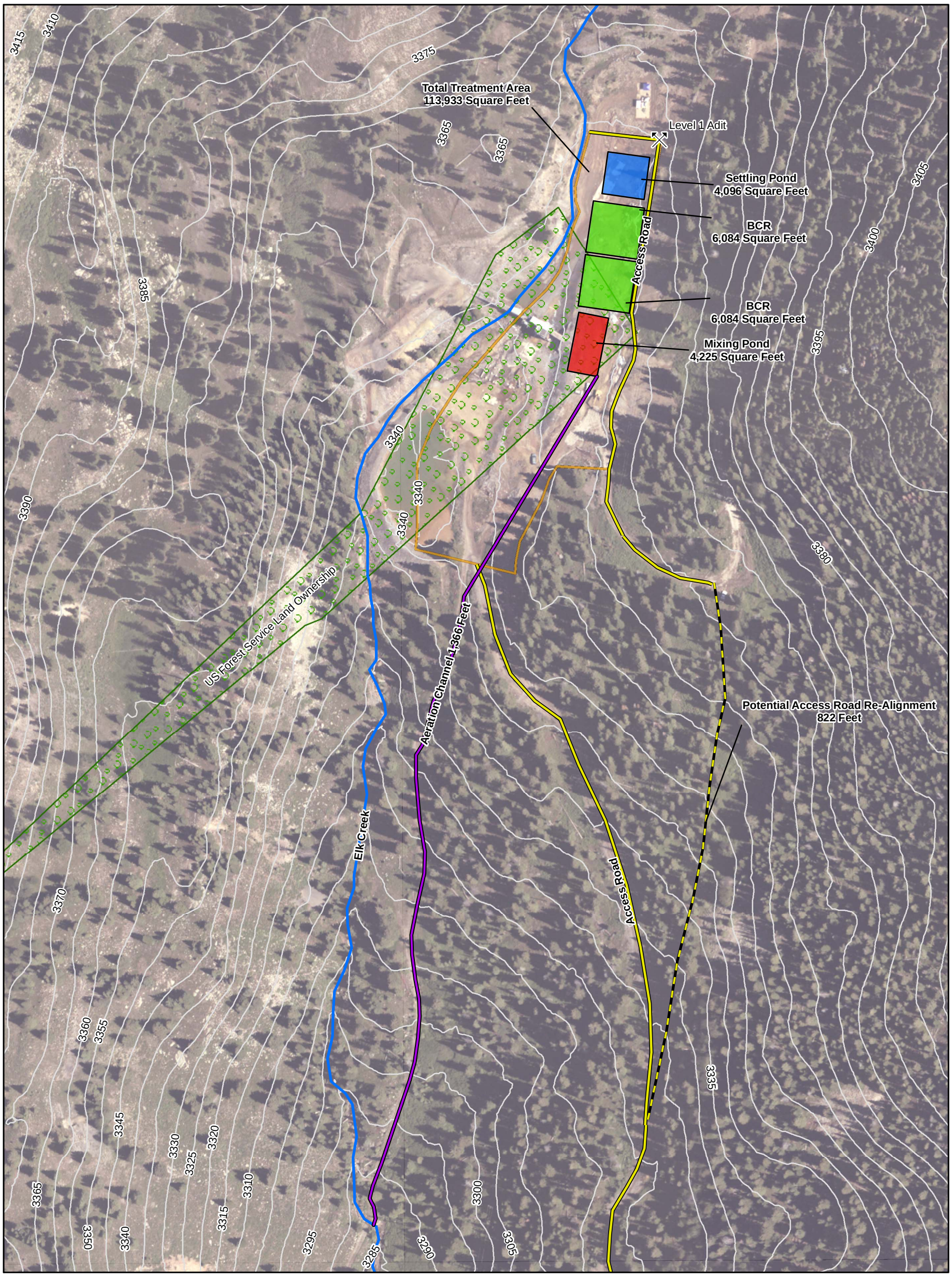

150 75 0 150 FEET

SCALE 1:1,800 1 INCH = 150 FEET
WHEN PRODUCED AT SIZE 11X17IN

N

LEGEND

- Level 1 Adit
- Potential Access Road Re-Alignment
- Existing Access Road
- Elk Creek
- Aeration Channel
- Contour - 5 Meter Interval
- Total Treatment Area
- BCR
- Mixing Pond
- Settling Pond
- US Forest Service Land Ownership

NOTE

This figure prepared for Pacific Western Technologies Ltd.

REFERENCES

50 GPM Layout: Golder, 2009.
Aerial Imagery, Contours, Survey Data: UOS Inc., Recieved August 2009.
Projection: StatePlane, Colorado Central, NAD83, Feet.

PROJECT

PACIFIC WESTERN TECHNOLOGIES LTD.
STANDARD MINE SUPER FUND SITE
CRESTED BUTTE, CO

TITLE

ALTERNATIVE 2
(50 GPM) SIZING AND LAYOUT

Golder Associates
Denver, Colorado

PROJECT No.		093-81796	File Name: 11x17_SystemLayout_55GPMVertical.mxd
DESIGN	PS	09/21/2009	SCALE AS SHOWN REV 0
GIS	AR	09/21/2009	FIGURE 6
CHECK	PS	09/21/2009	
REVIEW	TR	10/14/2009	

Map Document: M:\SuperFunMine\ArcMap\SystemGPM\11x17_SystemLayout_160gpmVertical.mxd / Modified 4/7/2010 1:21:58 PM / Plotted 4/7/2010 1:21:58 PM by aratke

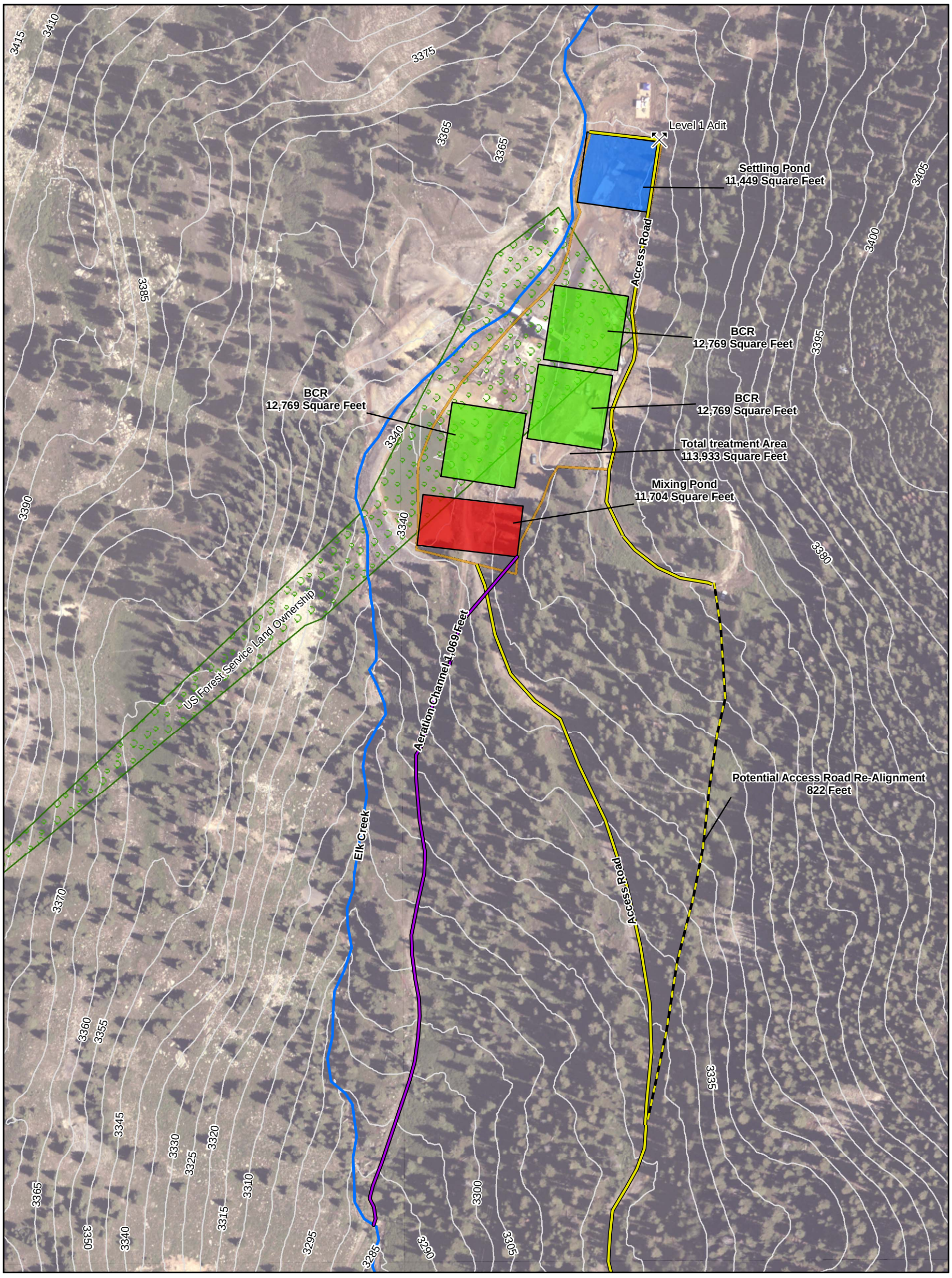

150 75 0 150 FEET

SCALE 1:1,800 1 INCH = 150 FEET
WHEN PRODUCED AT SIZE 11X17IN

N

LEGEND

- Level 1 Adit
- Potential Access Road Re-Alignment
- Existing Access Road
- Elk Creek
- Aeration Channel
- Contour - 5 Meter Interval
- Total Treatment Area
- BCR
- Mixing Pond
- Settling Pond
- US Forest Service Land Ownership

NOTE

This figure prepared for Pacific Western Technologies Ltd.

REFERENCES

160 GPM Layout: Golder, 2009.
Aerial Imagery, Contours, Survey Data: UOS Inc., Recieved August 2009.
Projection: StatePlane, Colorado Central, NAD83, Feet.

PROJECT

PACIFIC WESTERN TECHNOLOGIES LTD.
STANDARD MINE SUPER FUND SITE
CRESTED BUTTE, CO

TITLE

ALTERNATIVE 3
(160 GPM) SIZING AND LAYOUT

Golder Associates
Denver, Colorado

PROJECT No.		093-81796	FILE No. SystemLayout_160GPMVertical.mxd	
DESIGN	PS	09/21/2009	SCALE AS SHOWN	REV 0
GIS	AR	09/21/2009	FIGURE 7	
CHECK	PS	09/21/2009		
REVIEW	TR	10/14/2009		

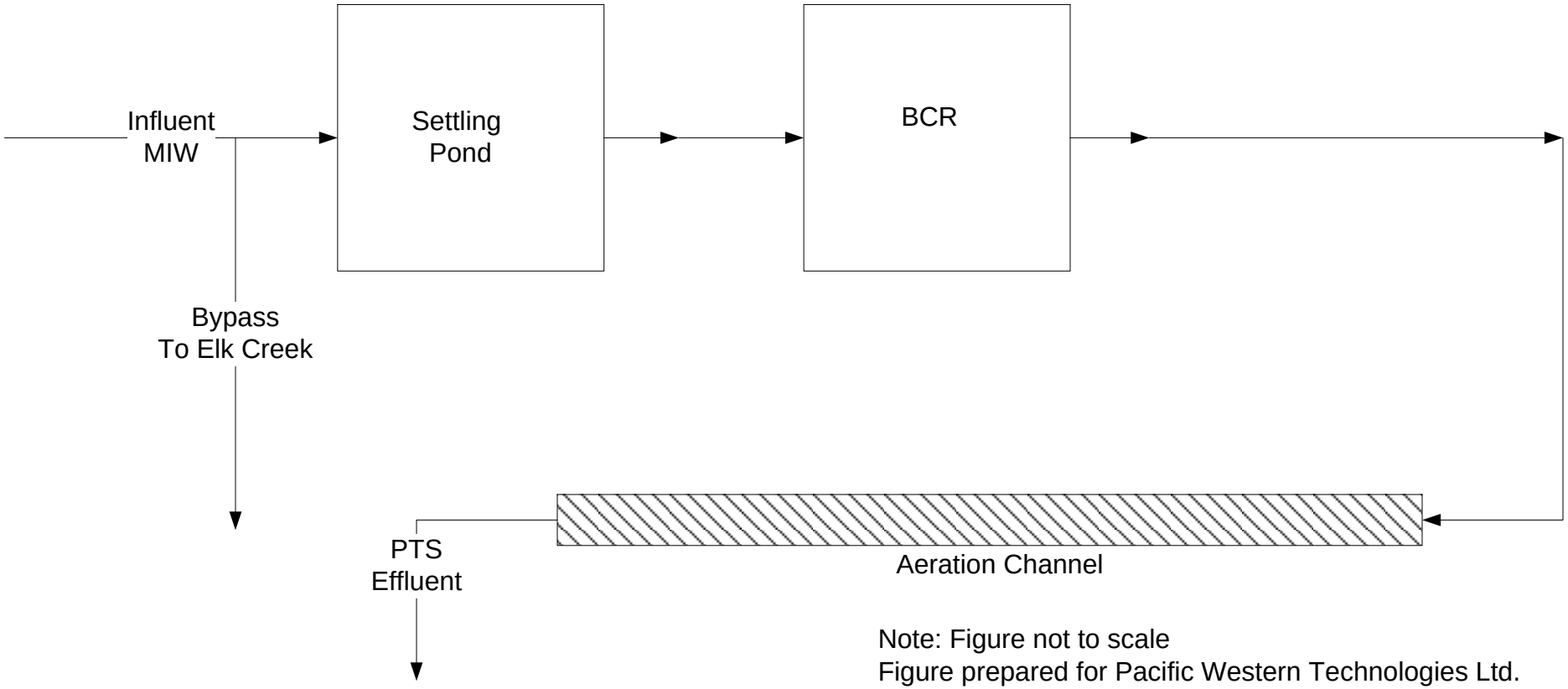

Note: Figure not to scale
Figure prepared for Pacific Western Technologies Ltd.

Golder Associates
Denver, Colorado

TITLE
Process Flow Diagram for Alternative 4

CLIENT/PROJECT
Standard Mine Superfund Site
Feasibility Study Report

DRAWN	PCS	DATE	4/9/2010	JOB NO.	093-81796
CHECKED	TLR	SCALE	Not To Scale	DWG. NO.	NA
REVIEWED	JJG	FILE NO.	NA	FIGURE NO.	8

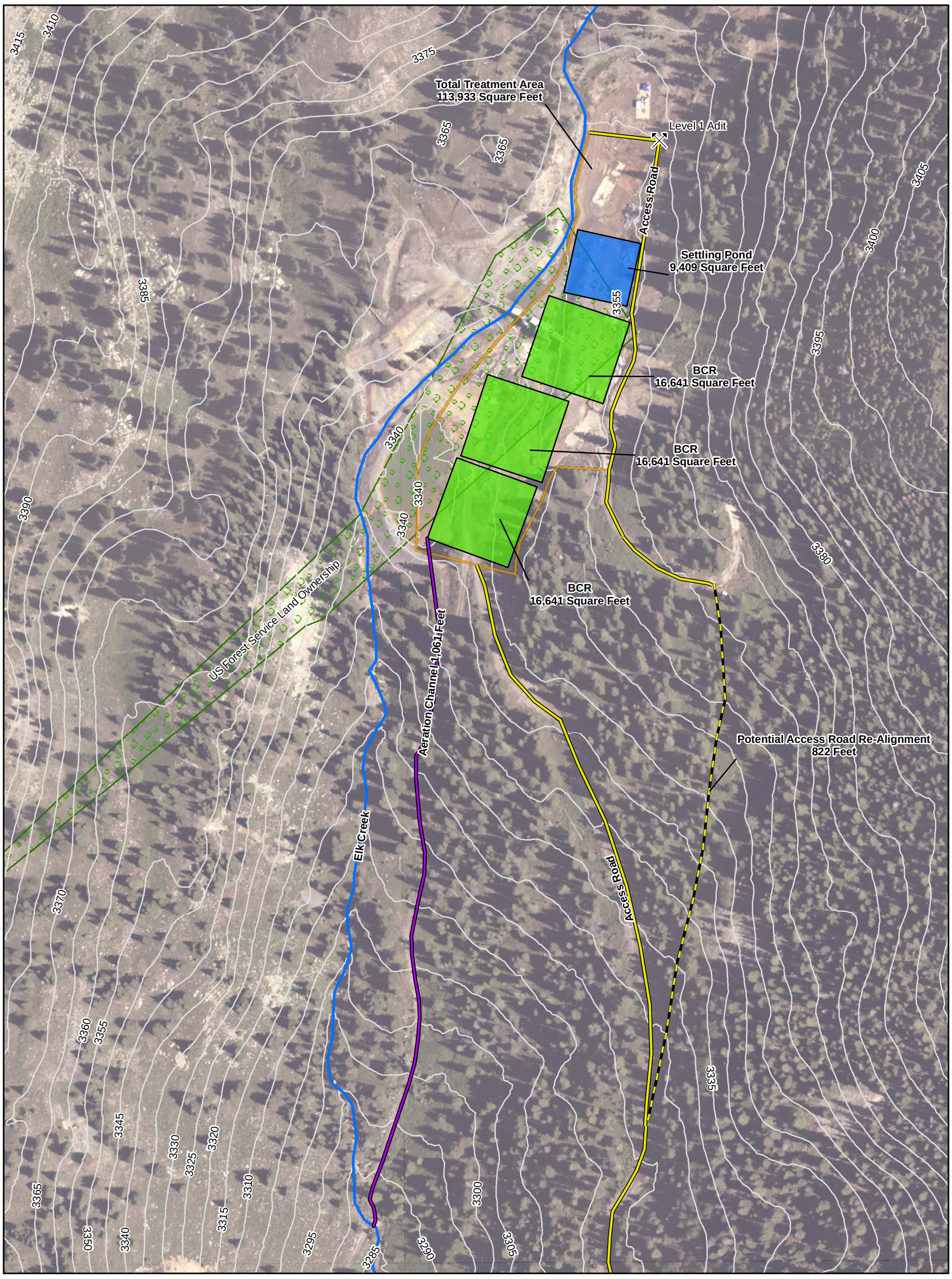

150 75 0 150 FEET

SCALE 1:1,800 1 INCH = 150 FEET
WHEN PRODUCED AT SIZE 11X17IN

N

LEGEND

- Level 1 Adit
- Potential Access Road Re-Alignment
- Existing Access Road
- Elk Creek
- Aeration Channel
- Contour - 5 Meter Interval
- Total Treatment Area
- BCR
- Mixing Pond
- Settling Pond
- US Forest Service Land Ownership

NOTE

This figure prepared for Pacific Western Technologies Ltd.

REFERENCES

125 GPM Layout: Golder, 2009.
Aerial Imagery, Contours, Survey Data: UOS Inc., Recieved August 2009.
Projection: StatePlane, Colorado Central, NAD83, Feet.

PROJECT

PACIFIC WESTERN TECHNOLOGIES LTD.
STANDARD MINE SUPER FUND SITE
CRESTED BUTTE, CO

TITLE

ALTERNATIVE 4
(125 GPM) SIZING AND LAYOUT

Golder Associates
Denver, Colorado

PROJECT No.		093-81796	FILE No. SystemLayout_125GPMVerticalNoMixing.mxd	
DESIGN	PS	09/21/2009	SCALE AS SHOWN	REV 0
GIS	AR	09/21/2009	FIGURE 9	
CHECK	PS	09/21/2009		
REVIEW	TR	10/14/2009		

Map Document: M:\SuperFunMine\ArcMap\SystemGPM\11x17_SystemLayout_20gpmVerticalUSFS.mxd / Modified 4/7/2010 1:11:02 PM / Plotted 4/7/2010 1:11:02 PM by aratke

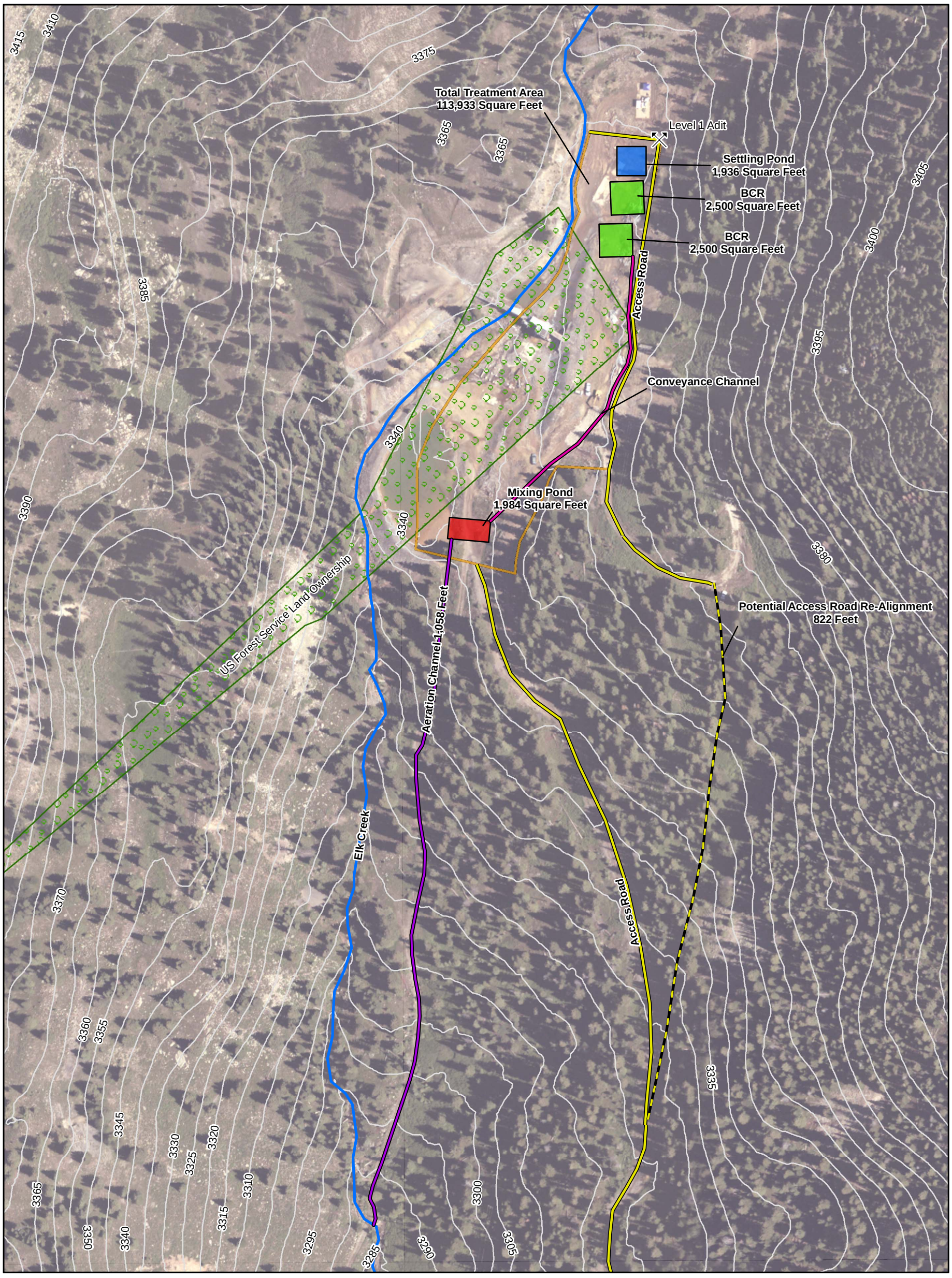

150 75 0 150 FEET

SCALE 1:1,800 1 INCH = 150 FEET
WHEN PRODUCED AT SIZE 11X17IN

N

LEGEND

- Level 1 Adit
- Potential Access Road Re-Alignment
- Existing Access Road
- Elk Creek
- Aeration Channel
- Conveyance Channel
- Contour - 5 Meter Interval
- Total Treatment Area
- BCR
- Mixing Pond
- Settling Pond
- US Forest Service Land Ownership

NOTE

This figure prepared for Pacific Western Technologies Ltd.

REFERENCES

20 GPM Layout: Golder, 2009.
Aerial Imagery, Contours, Survey Data: UOS Inc., Recieved August 2009.
Projection: StatePlane, Colorado Central, NAD83, Feet.

PROJECT

PACIFIC WESTERN TECHNOLOGIES LTD.
STANDARD MINE SUPER FUND SITE
CRESTED BUTTE, CO

TITLE

ALTERNATIVE 5
(20 GPM ON NON USFS PROPERTY)
SIZING AND LAYOUT

Golder Associates
Denver, Colorado

PROJECT No.		093-81796	FILE No. SystemLayout_20GPMVertical.mxd	
DESIGN	PS	09/21/2009	SCALE AS SHOWN	REV 0
GIS	AR	09/21/2009	FIGURE 10	
CHECK	PS	09/21/2009		
REVIEW	TR	10/14/2009		

APPENDIX A:
DETAILED COST ESTIMATES

Table A1: Unit Costs
Standard Mine Superfund Site Feasibility Study
Crested Butte, Colorado
October 16, 2009

Reference No.	Cost Item	Units	Raw Unit Cost	Adjustment factor[1]	Adjusted Unit Cost	Reference / Notes
1	**Clear / Grub Site, light trees**	**acre**	**$5,575.00**	**1.3**	**$7,247.50**	**RS Means 2009 reference # 31 11 10.10 0200**
2	**Strip / Stockpile Topsoil, adverse conditions**	**yd^3**	**$1.63**	**1.3**	**$2.12**	**RS Means 2009 reference # 31 14 13 0100**
3	**Topographical survey**	**acre**	**$3,625.00**	**1.3**	**$4,712.50**	**RS Means 2009 reference # 02 21 13.09 0100**
4	**Geotechnical investigation**	**each**	**$18,000.00**	**1**	**$18,000.00**	**Estimate**
5	**Silt Fence, adverse conditions**	**ft**	**$1.26**	**1.3**	**$1.64**	**RS Means 2009 reference # 31 25 13.10 1100**
6	**Straw bales**	**ft**	**$8.10**	**1.3**	**$10.53**	**RS Means 2009 reference # 31 25 13.10 1250**
7	**Seeding**	**yd^2**	**$2.98**	**1.3**	**$3.87**	**RS Means 2009 reference #32 92 19.13 0310**
8	**Structural excavation, 1 CY bucket, rock.**	**yd^3**	**$17.25**	**1.3**	**$22.43**	**RS Means 2009 reference # 31 23 16.14 6120**
9	**Place gravel fill, compacted, 4" layer**	**ft^2**	**$0.55**	**1.3**	**$0.72**	**RS Means 2009 reference # 31 23 23.17 0600**
10	**Compaction, structural, 8" lifts, common fill, sheep foot**	**yd^3**	**$1.50**	**1.3**	**$1.95**	**RS Means 2009 reference # 31 23 23.24 0300**
11	**Finish grading - basin bottoms**	**ft^2**	**$0.38**	**1.3**	**$0.49**	**RS Means 2009 reference # 31 22 16.10 0016**
12	**Fine grading / seeding, lime, fertilizer**	**yd^2**	**$2.98**	**1.3**	**$3.87**	**RS Means 2009 reference # 32 92 19.13 0310**
13	**Concrete for basin floor**	**yd^3**	**$360.00**	**1.3**	**$468.00**	**03 30 53.40 4050**
14	**Basin sidewall concrete costs**	**yd^3**	**$400.00**	**1.3**	**$520.00**	**03 30 53.40 4200**
15	**Stem wall concrete costs**	**yd^3**	**$360.00**	**1.3**	**$468.00**	**03 30 53.40 4200**
16	**Walls, pumped, 8" thick**	**yd^3**	**$41.50**	**1.3**	**$53.95**	**03 31 05.70 4950**
17	**Water stop rib 3/8" x 6", placed along concrete wall**	**ft**	**$8.15**	**1.3**	**$10.60**	**03 15 13.50 1300**
18	**Top wall float fin 1/16" thick, along wall**	**ft**	**$1.78**	**1.3**	**$2.31**	**03 35 29.60 0600**
19	**Place / Spread fill with dozer, from stockpile**	**yd^3**	**$19.05**	**1.3**	**$24.77**	**RS Means 2009 reference # 31 23 23.13 0200**
20	**Compaction, structural, 8" lifts, common fill, sheep foot**	**yd^3**	**$1.50**	**1.3**	**$1.95**	**RS Means 2009 reference # 31 23 23.24 0300**
	Drainage gravel	yd^3	$76.95	1.00	$76.95	Pilot construction costs
	Installation costs	yd^3	$1.88	1.30	$2.44	RS Means 2009 reference # 31 23 23.17 0020, same as BCR placement cost
21	**Drainage gravel**	**yd^3**	**-**	**-**	**$79.39**	**Summary unit cost including installation**
	2" diameter Schedule 80 PVC pipe	ft	$3.81	1.00	$3.81	Vendor Catalog Harrington Industrial Plastics Inc catalog #800-020
	Labor to perforate pipe	ft	$5.95	1.30	$7.74	Estimate. Half of install costs
	Labor to install pipe	ft	$11.90	1.30	$15.47	RS Means 2009 reference # 22 11 13.74 4480
22	**2" diameter Sch. 80 PVC perforated pipe**	**ft**	**-**	**-**	**$27.02**	**Summary unit cost including installation**
	4" diameter Sch. 80 PVC pipe	ft	$11.37	1.00	$11.37	Vendor Catalog Harrington Industrial Plastics Inc catalog #800-040
	Labor to install pipe	ft	$14.65	1.30	$19.05	RS Means 2009 reference # 22 11 13.74 4480
23	**4" diameter Sch. 80 PVC pipe**	**ft**	**-**	**-**	**$30.42**	**Summary unit cost including installation**
	4" diameter schedule 80 PVC reducer tee 4"X4"X2"	each	$70.60	1.00	$70.60	Vendor Catalog Harrington Industrial Plastics Inc catalog #801-420
	Labor to install fitting	each	$46.00	1.3	$59.80	RS Means 2009 reference #22 11 13.76 4864
24	**Reducing tee 4"X4"X2" -Sch. 80 PVC**	**each**	**-**	**-**	**$130.40**	**Summary unit cost including installation**
	4" Tee Sch. 80 PVC fitting	each	$55.48	1	$55.48	Vendor Catalog Harrington Industrial Plastics Inc catalog #801-040
	Labor to install fitting	each	$64.00	1.30	$83.20	RS Means 2009 reference #22 11 13.76 5200
25	**Tee 4" Sch. 80 PVC**	**each**	**-**	**-**	**$138.68**	**Summary unit cost including installation**
	90° Elbow 4" Sch. 80 PVC fitting	each	$39.58	1.00	$39.58	Vendor Catalog Harrington Industrial Plastics Inc catalog #806-040
	Labor to install fitting	each	$42.50	1.3	$55.25	RS Means 2009 reference #22 11 13.76 2190
26	**90° Elbow 4" Sch. 80 PVC**	**each**	**-**	**-**	**$94.83**	**Summary unit cost including installation**
	45° Elbow 4" Sch. 80 PVC	each	$107.49	1.00	$107.49	Vendor Catalog Harrington Industrial Plastics Inc catalog #817-040
	Labor to install fitting	each	$42.50	1.3	$55.25	RS Means 2009 reference #22 11 13.76 0110
27	**45° Elbow Sch. 80 PVC**	**each**	**-**	**-**	**$162.74**	**Summary unit cost including installation**
	Pipe cap 2" Sch. 40 PVC	each	$1.66	1.00	$1.66	Vendor catalog Harrington Industrial Plastics Inc catalog #447-020
	Labor to install fitting	each	$21.00	1.3	$27.30	RS Means 2009 reference #22 11 13.76 0090
28	**Pipe cap 2" Sch. 40 PVC**	**each**	**-**	**-**	**$28.96**	**Summary unit cost including installation**
	Pipe cap 4" Sch. 40 PVC	each	$13.16	1.00	$13.16	Vendor catalog Harrington Industrial Plastics Inc catalog #447-040
	Labor to install fitting	each	$42.50	1.3	$55.25	RS Means 2009 reference #22 11 13.76 0110
29	**Pipe cap 4" Sch. 40 PVC**	**each**	**-**	**-**	**$68.41**	**Summary unit cost including installation**
	Agridrain In Line Water Level Control	each	$680.00	1.00	$680.00	Vendor catalog, Agridrain 4" 8' tall, from 2008 catalog
	Labor to install agrarian	each	$160.00	1.00	$160.00	Estimate
30	**Agridrain**	**each**	**-**	**-**	**$840.00**	**Summary unit cost including installation**
	Wye 4" Sch. 80 PVC	each	$338.43	1	$338.43	Vendor Catalog Harrington Industrial Plastics Inc catalog #875-080
	Labor to install fitting	each	$64.00	1	$64.00	RS Means 2009 reference #22 11 13.76 4908
	Cleanout pipe, 4" Sch. 80 PVC pipe	10 ft	$304.15	1	$304.15	Estimate of pipe length per cleanout
	Pipe caps per wye fitting	2	$136.82	1	$136.82	Cost for 2 pipe caps, see unit cost reference #29
31	**Pipe cleanout, 4" Sch. 80 PVC**	**each**	**-**	**-**	**$843.40**	**Summary unit cost**
	Flume and protective box	each	$2,295.00	1.15	$2,639.25	Pilot cell costs
	Concrete installed cost	ft^2	$165.00	1.3	$214.50	RS Means 2009 reference # 03110-240-4700
32	**Flume**	**each**	**-**	**-**	**$2,853.75**	**Summary unit cost including installation**
	BCR media	yd^3	$77.91	1	$43.98	Pilot construction costs
	BCR media mixing	yd^3	$1.88	1.3	$2.44	RS Means 2009 reference # 31 23 23.17 0020
	BCR media placement	yd^3	$1.88	1.3	$2.44	RS Means 2009 reference # 31 23 23.17 0020
33	**BCR media**	**yd^3**	**-**	**-**	**$48.87**	**Summary unit cost including installation**
	Woodchips	yd^3	$20.00	1.15	$23.00	Pilot construction costs
	Woodchip placement	yd^3	$1.88	1.3	$2.44	Substrate placement costs
34	**Woodchip cover installed costs**	**yd^3**	**-**	**-**	**$25.44**	**Summary unit cost including installation**
	Geomembrane	ft^2	$0.37	1	$0.37	Pilot construction cost
	Geomembrane installation costs	ft^2	$0.43	1	$0.43	Vendor quote
35	**Total liner unit cost**	**ft^2**	**-**	**-**	**$0.80**	**Summary unit cost including installation**
	Geotextile 6 oz.	ft^2	$0.08	1.15	$0.09	Pilot construction costs
	Geotextile installation	yd^2	$1.43	1.45	$2.07	RS Means 2006 reference #:02300-300-1550
36	**Geotextile 6 oz.**	**ft^2**	**-**	**-**	**$0.32**	**Summary unit cost including installation**
37	**Excavate 2' deep, 2' wide ditch**	**yd^3**	**$6.35**	**1.3**	**$8.26**	**RS Means 2009 reference # 31 23 16.13 060**
38	**Install rip rap**	**yd^3**	**$60.00**	**1.3**	**$78.00**	**RS Means 2009 reference # 31 37 13.10 0100**
39	**Trench excavation, 6' to 10' deep**	**yd^3**	**$3.72**	**1.3**	**$4.84**	**RS Means 2009 reference # 31 23 16.13 6150**
40	**Backfill, with 6" compaction, heavy soil**	**yd^3**	**$26.20**	**1.3**	**$34.06**	**RS Means 2009 reference # 31 23 23.13 0300**
41	**ISCO auto sampler**	**each**	**$2,591.10**	**1.15**	**$2,979.77**	**Pilot construction cost**
42	**Bubbler module for ISCO auto sampler**	**each**	**$1,710.00**	**1.15**	**$1,966.50**	**Pilot construction cost**
	Solar panel assembly	each	$6,400.00	1.15	$7,360.00	Pilot construction costs
	Deep-cycle marine batteries, 12 volt	each	$480.00	1.15	$552.00	Pilot construction cost for 6 batteries
43	**Solar system to supply monitoring equipment**	**each**	**-**	**-**	**$7,912.00**	**Pilot construction cost**
44	**Wetland planting cost**	**LS**	**$8,665.04**	**-**	**$8,665.04**	**Estimate, applies to Alternative 1 only**
	Landfill tipping fee	yd^3	$12.00	1	$12.00	Gunnison landfill quote for non-hazardous waste
	Hauling costs	yd^3	$13.60	1.3	$17.68	RS Means 2009 reference # 31 23.20 1070., assumes 40 mile haul
45	**Total landfill disposal costs**	**yd^3**	**-**	**-**	**$29.68**	**Summary unit cost**

Note:

[1] - Various adjustment factors are applied as follows:

(1.3) Multiplier applied to 2009 RS Means Heavy Construction Cost Data (23rd Ed.)costs to account for Site access, regional costs.

(1.15) Multiplier applied to pilot construction costs to account for inflation. Pilot unit was constructed in 2007.

(1.45) Multiplier applied to 2006 RS Means Heavy Construction Cost Data (20th Ed.) to account for inflation, Site access, regional costs.

Bold - Bold unit costs are carried forward in the construction cost estimates.

Table A2: Estimated Capital Costs for Alternative 1
Standard Mine Superfund Site Feasibility Study
Crested Butte, Colorado
October 16, 2009

Item	Units	Quantity	Unit Cost	Extended Cost	Unit Cost Reference No.	Notes
Direct Costs						
General Site Work						
Clear and grub site	ft^2	36,188	$ 0.17	$6,020.93	1	Total footprint of passive treatment system
Remove topsoil	yd^3	670	$ 2.12	$1,420.04	2	Footprint of BCR, settling basin, and mixing basin*topsoil thickness
Access road relocation	ls	1.0	$ 25,000.00	$25,000.00		Estimate
Survey lines and grades	acres	0.83	$ 4,712.50	$3,914.95	3	Total site footprint
Geotechnical report	ls	1.0	$ 18,000.00	$18,000.00	4	estimate
Silt fence	ft	380	$ 1.64	$623.20	5	2 square sides of total footprint - assume 2 sides need fencing
Install staked hay bales	ft	38	$ 10.53	$400.63	6	10 ft spacing along fence
Fence and hay bale removal	ls	1.0		$511.91		Estimate, half of installation costs
Seeding berms and disturbed area	yd^2	1,556	$ 0.43	$669.96	7	Clear and grub area - top area of PTS unit operations
			Subtotal	**$56,561.62**		
Biochemical Reactors						
Excavate BCR	yd^3	574	$ 22.43	$12,868.46	8	
Compact sub grade	yd^3	128	$ 0.72	$91.52	9	
Final grading for BCRs	ft^2	4,950	$ 0.49	$2,413.14	11	
Basin floor concrete volume	yd^3	122	$ 468.00	$57,200.16	12	
Basin wall concrete volume	yd^3	104	$ 520.00	$54,200.25	14	Quantity is increased to account for multiple BCRs
Stem wall concrete volume	yd^3	7	$ 468.00	$3,170.25	15	Quantity is increased to account for multiple BCRs
Concrete wall pumping costs	yd^3	8	$ 53.95	$430.07	16	Quantity is increased to account for multiple BCRs
Water stop, rib 3/8" x 6"	ft	400	$ 10.60	$4,238.01	17	Quantity is increased to account for multiple BCRs
Top wall float fin 1/16"	ft	800	$ 2.31	$1,851.20	18	Quantity is increased to account for multiple BCRs
Place fill for berms	yd^3	121	$ 24.77	$3,005.84	19	Berm volume from BCR design multiplied by the number of BCR cells
Compact berms	yd^3	121	$ 1.95	$236.68	20	
Install drainage gravel	yd^3	56	$ 79.39	$4,471.47	21	
Install perforated pipe	ft	928	$ 27.02	$25,069.91	22	
Install solid pipe	ft	297	$ 30.42	$9,022.31	20	
Reducing tee 4" by 4" by 2" -Sch. 80 PVC	each	70	$ 130.40	$9,180.16	24	
Tee 4" Sch. 80 PVC	each	6	$ 138.68	$832.08	22	
90^0 Elbow 4" Sch. 80 PVC	each	8	$ 94.83	$758.64	26	
45^0 Elbow Sch. 80 PVC	each	2	$ 162.74	$325.48	27	
Pipe cap 2" Sch. 40 PVC	each	35	$ 28.96	$1,019.39	28	
Pipe cap 4" Sch. 40 PVC	each	4	$ 68.41	$273.64	29	
Water level control structure	each	2	$ 840.00	$1,680.00	30	
Install substrate	yd^3	597	$ 48.87	$29,192.51	33	
Install woodchips	yd^3	406	$ 25.44	$10,335.96	34	
Install cover liner	ft^2	3125	$ 0.80	$2,499.81	35	
Install cover geotextile	ft^2	3125	$ 0.32	$999.40	36	Geotextile under liner
			Subtotal	**$ 235,366**		
Settling Basin						
Excavate	yd^3	274	$ 22.43	$6,153.42	8	
Compact sub grade	ft^2	1,764	$ 0.72	$1,261.26	9	
Final grading	ft^2	3,411	$ 0.49	$1,662.65	11	
Basin floor concrete volume	yd^3	47	$ 468.00	$22,147.84	13	
Basin wall concrete volume	yd^3	22	$ 520.00	$11,633.21	14	
Stem wall concrete volume	yd^3	3	$ 468.00	$1,585.13	15	
Concrete wall pumping costs	yd^3	1	$ 53.95	$51.47	16	
Water stop, rib 3/8" x 6"	ft	176	$ 10.60	$1,864.72	17	
Top wall float fin 1/16"	ft	176	$ 2.31	$407.26	18	
Place fill for berms	yd^3	13	$ 24.77	$324.09	19	
Compact berms	yd^3	0.48	$ 1.95	$0.95	20	
Water level control structure	each	3	$ 840.00	$2,520.00	30	
			Subtotal	**$ 49,611.98**		
Mixing Basin						
Excavate	yd^3	273	$ 22.43	$6,126.18	8	
Compact sub grade	ft^2	1,800	$ 0.72	$1,287.00	9	
Final grading	yd^3	11	$ 0.49	$5.30	11	
Basin floor concrete volume	yd^3	48	$ 468.00	$22,696.97	13	
Basin wall concrete volume	yd^3	24	$ 520.00	$12,426.38	14	
Stem wall concrete volume	yd^3	3	$ 468.00	$1,585.13	15	
Concrete wall pumping costs	yd^3	27	$ 53.95	$1,471.97	16	
Water stop, rib 3/8" x 6"	ft	188	$ 10.60	$1,991.86	17	
Top wall float fin 1/16"	ft	188	$ 2.31	$435.03	18	
Place fill for berms	yd^3	11	$ 24.77	$269.12	19	
Compact berms	yd^3	11	$ 1.95	$21.19	20	
Water level control structure	each	1	840	$840.00	30	
			Subtotal	**$ 49,156.13**		
Piping Between PTS Components						
Pipe from settling basin to BCR	ft	200	$ 30.42	$6,083.00	20	Quantity estimated
pipe from BCR to mixing basin	ft	100	$ 30.42	$3,041.50	20	Quantity estimated
pipe from settling basin to mixing basin	ft	400	$ 30.42	$12,166.00	20	Quantity estimated
pipe from mixing basin to aeration channel	ft	50	$ 30.42	$1,520.75	20	Quantity estimated
pipe from settling pond to creek	ft	200	$ 30.42	$6,083.00	20	Quantity estimated
Cleanouts	each	38	$ 843.40	$32,049.20	31	Estimate based on cleanouts in both directions spaced every 50 ft
Misc. pipe fittings	ls	1	$ 2,575.70	$2,575.70	24, 25	Estimate, 10 45^0 elbows, 10 90^0 elbows
Pipe trench excavation	yd^3	422	$ 4.84	$2,041.87	39	
Bedding installation	yd^3	211	$ 58.50	$12,350.00	9	
Trench backfill	ft	422	$ 1.26	$532.63	40	
			Subtotal	**$ 78,443.64**		
Aeration Channel						
Channel excavation	yd^3	225	$ 8.26	$1,854.17	32	Calculated based on channel dimensions, 1:3, H:V side slopes
Geotextile install	ft^2	14,974	$ 0.32	$4,789.14	36	Calculated based on channel dimensions, 1:3, H:V side slopes
Liner Install	ft^2	14,974	$ 0.80	$11,979.08	35	Same as geotextile install
Rip Rap fill	yd^3	225	$ 78.00	$17,519.69	38	
			Subtotal	**$ 36,142.08**		
Monitoring Equipment						
Flume with protective box	each	4	$ 2,853.75	$11,415.00	32	Influent, effluent, 2 on BCR influents, 1 on mixing pond MIW influent, 1 on mixing pond bypass
ISCO auto samplers	each	2	$ 2,979.77	$5,959.53	41	Influent and effluent
Flow bubbler modules	each	2	$ 1,966.50	$3,933.00	42	Influent and effluent
Solar power supply system	each	2	$ 7,912.00	$15,824.00	43	Pilot solar costs x 2 to account for increase in power demands
Small shed to house equipment	each	2	$ 5,000.00	$10,000.00		Estimate
			Subtotal	**$ 47,131.53**		
Wetlands						
Excavate	yd^3	1,990	$ 22.43	$ 44,623.37	8	
Establish grade	ft^2	14,826	$ 0.49	$ 7,227.43	11	
Compact Sideslopes	ft^2	13,508	$ 0.72	$ 9,658.23	9	
Fill for berms	yd^3	321	$ 24.77	$ 7,959.39	19	
compact berms	yd^3	321	$ 1.95	$ 626.72	20	
Install Geottextile	ft^2	38,178	$ 0.32	$ 12,210.55	36	
Install Liner	ft^2	28,334	$ 0.80	$ 22,666.82	35	
Install topsoil fill for plants	yd^3	344	$ 24.77	$ 8,522.37	19	
Material cost for wetland plants	#	6,522	$ 1.00	$ 6,521.61		Estimate based on pilot costs
Labor to plant plants	ls	1	$ 7,912.00	$ 7,912.00	44	
Water level control structure	ls	3	$ 840.00	$ 2,520.00	30	
			Subtotal	**$ 130,448.49**		
Direct Costs				**$ 682,861.81**		Sum of above subtotals
Indirect Costs						
Mobilization				$ 88,772.04		13% of direct costs
Scope contingency				$ 119,500.82		17.5% of direct costs[2,3]
Bid contingency				$ 239,001.63		20% of direct costs[2,3]
Total Construction Costs[4]				**$ 1,130,136.30**		
Engineering design				$ 169,520.45		15% of construction costs
Project management				$ 90,410.90		8% of total construction cost[2]
Construction management				$ 113,013.63		10% of total Construction Costs[2]
Estimate of Total Capital Cost				**$ 1,504,000.00**		

Notes:

1) No calculations were rounded until the final total to aid computation accuracy

2) Cost is based on the EPA CERCLA Cost Estimating Guidance document percentages (Table 5-8) for a project in the $100K to $500K capital cost range.

3) Scope contingency is estimated in the middle of the EPA CERCLA acceptable range because of two years of pilot system operation. Bid Contingency is estimated on the high end of the acceptable range because of the uniqueness of the project, which may be viewed by contractors as somewhat risky when compared to "typical" construction projects.

4) Total construction costs include direct costs, mobilization, scope contingency and bid contingency

Table A3: Estimated Operations and Maintenance Costs for Alternative 1
Standard Mine Superfund Site Feasibility Study
Crested Butte, Colorado
October 16, 2009

Item	Units	Quantity	Unit Cost	Extended Cost	Notes
Annual Operation and Maintenance Costs					
Sampling and Site Inspection					
Quarterly monitoring event	ls	1	$ 10,000	$ 10,000	Estimate
Annual report preparation	ls	1	$ 5,000	$ 5,000	Estimate
General site maintenance	ls	1	$ 10,000	$ 10,000	Estimate
			Total Annual costs	**$ 25,000**	
5-Year Operation & Maintenance Costs					
Sludge Removal and Disposal					
Pump out Sludge using sump Pump	yd^3	260		$ -	
Dispose of dewatered sludge	yd^3	130	$ 29.68	$ 200.00	Assumed 50% volume reduction of sludge to solids
Geotube purchase	each	2	$ 2,170.00	$ 4,340.00	Vendor quote, project experience
Roll-off dumpster rental	each	2	$ 500.00	$ 1,000.00	estimate
Sludge pump rental	ls	1	$ 500.00	$ 500.00	estimate
Field work for dewatering mixing pond	ls	1	$ 10,000.00	$ 10,000.00	estimate
Sludge disposal costs	yd^3	130	$ 29.68	$ 3,864.75	Unit cost reference # 42
			Subtotal	$ 19,904.75	
Mobilization				$ 2,587.62	13% of direct costs[2,3]
Scope Contingency				$ 3,980.95	20% ofdirect costs[2,3]
Bid Contingency				$ 7,961.90	20% of direct costs[2,3]
			Subtotal	$ 34,435.22	
Engineering Support - Permitting, substrate disposal support, etc				$ 5,165.28	15% of Subtotal
Project management				$ 2,754.82	8% of subtotal[3]
Construction Management				$ 3,443.52	10% of subtotal[3]
			Total Sludge Disposal Costs	$ 45,798.84	
5-year Monitoring Event and Report	ls	1	$ 20,000	$ 20,000	Estimate
			Total 5-year costs	**$ 90,798.84**	includes annual and 5-year costs
15-Year O& M Costs					
BCR Media Replacement					
Excavate BCR woodchip cover	yd^3	406	$ 22.43	$ 9,109.57	Excavation costs for BCR cell
Excavate spent BCR media	yd^3	597	$ 22.43	$ 13,395.22	Excavation costs for BCR cell
New media install	yd^3	597	$ 48.87	$ 29,192.51	Substrate placement costs
Install woodchip cover	yd^3	406	$ 2.44	$ 991.19	Unit cost for placing fill. Assume woodchips will be reused
Install cover liner	ft^2	2,752	$ 0.17	$ 981.05	Labor costs to replace liner, plus $500 for material repairs
Dispose of spent BCR media	yd^3	597	$ 29.68	$ 17,728.88	Unit cost reference # 42
			Subtotal	$ 71,398.41	
Mobilization				$ 9,281.79	13% of direct costs[2,3]
Scope Contingency				$ 14,279.68	20% of direct costs[2,3]
Bid Contingency				$ 28,559.36	20% of direct costs[2,3]
			Subtotal	$ 123,519.25	
Engineering Support - Permitting, substrate disposal support, etc				$ 18,527.89	15% of Subtotal
Project management				$ 9,881.54	8% of subtotal[3]
Construction Management				$ 12,351.93	10% of subtotal[3]
			Total BCR Replacement Costs	$ 164,280.60	
Total 15-Year Costs				**$ 256,000**	includes annual, 5-year costs, and 15-year costs

Notes:
1) Most unit rates were developed from RS Means Heavy Construction Cost Data, 2009 Edition, adjusted for site conditions.
2) Cost is based on the EPA CERCLA Cost Estimating Guidance document percentages (Table 5-8) for a project in the $100K to $500K capital cost range.
3) Scope contingency is estimated in the middle of the EPA CERCLA acceptable range because of two years of pilot system operation. Bid Contingency is estimated on the high end of the acceptable range because of the uniqueness of the project, which may be viewed by contractors as somewhat risky when compared to "typical" construction

Table A4: Alternative 1 Cost Estimate Schedule and Net Present Value Assessment
Standard Mine Superfund Site Feasibility Study
Crested Butte, Colorado

Year	Cost item Summary	Estimated Cost	Discount Factor[1]	NPV
0	System Construction	$1,504,000	1.00	$1,504,000
1	Annual Maintenance	$25,000	0.93	$23,400
2	Annual Maintenance	$25,000	0.87	$21,800
3	Annual Maintenance	$25,000	0.82	$20,400
4	Annual Maintenance	$25,000	0.76	$19,100
5	5-year maintenance, solids/sludge removal	$90,799	0.71	$64,700
6	Annual Maintenance	$25,000	0.67	$16,700
7	Annual Maintenance	$25,000	0.62	$15,600
8	Annual Maintenance	$25,000	0.58	$14,600
9	Annual Maintenance	$25,000	0.54	$13,600
10	5-year maintenance, solids/sludge removal	$90,799	0.51	$46,200
11	Annual Maintenance	$25,000	0.48	$11,900
12	Annual Maintenance	$25,000	0.44	$11,100
13	Annual Maintenance	$25,000	0.41	$10,400
14	Annual Maintenance	$25,000	0.39	$9,700
15	15-year maintenance (BCR media replacement), 5-year maintenance, and annual maintenance	$256,000	0.36	$92,800
16	Annual Maintenance	$25,000	0.34	$8,500
17	Annual Maintenance	$25,000	0.32	$7,900
18	Annual Maintenance	$25,000	0.30	$7,400
19	Annual Maintenance	$25,000	0.28	$6,900
20	5-year maintenance, solids/sludge removal	$90,799	0.26	$23,500
21	Annual Maintenance	$25,000	0.24	$6,000
22	Annual Maintenance	$25,000	0.23	$5,600
23	Annual Maintenance	$25,000	0.21	$5,300
24	Annual Maintenance	$25,000	0.20	$4,900
25	5-year maintenance, solids/sludge removal	$90,799	0.18	$16,700
26	Annual Maintenance	$25,000	0.17	$4,300
27	Annual Maintenance	$25,000	0.16	$4,000
28	Annual Maintenance	$25,000	0.15	$3,800
29	Annual Maintenance	$25,000	0.14	$3,500
30	15-year maintenance (BCR media replacement), 5-year maintenance, and annual maintenance	$256,000	0.13	$33,600
Total		**$2,724,000**		**$2,005,000**

Notes

1) Discount rate of 7% was employed based on EPA's *A Guide to Developing and Documenting Cost Estimates During the Feasibility Study* (2000)

Table A5: Estimated Capital Costs for Alternative 2
Standard Mine Superfund Site Feasibility Study
Crested Butte, Colorado
October 16, 2009

Item	Units	Quantity	Unit Cost	Extended Cost	Unit Cost Reference No.	Notes
Direct Costs						
General Site Work						
Clear and grub site	ft^2	21,239	$ 0.17	$3,533.77	1	Total footprint of passive treatment system
Remove topsoil	yd^3	393	$ 2.12	$833.44	2	Footprint of BCR, settling basin, and mixing basin*topsoil thickness
Access road relocation	ls	1.0	$ 25,000.00	$25,000.00		Estimate
Survey lines and grades	acres	0.49	$ 4,712.50	$2,297.74	3	Total site footprint
Geotechnical report	ls	1.0	$ 18,000.00	$18,000.00	4	estimate
Silt fence	ft	291	$ 1.64	$477.43	5	2 square sides of total footprint - assume 2 sides need fencing
Install staked hay bales	ft	29	$ 10.53	$306.92	6	10 ft spacing along fence
Fence and hay bale removal	ls	1.0		$392.18		Estimate, half of installation costs
Seeding berms and disturbed area	yd^2	106	$ 0.43	$45.79	7	Clear and grub area - top area of PTS unit operations
			Subtotal	**$50,887.28**		
Biochemical Reactors						
Excavate BCR	yd^3	1,435	$ 22.43	$32,171.13	8	
Compact sub grade	yd^3	320	$ 0.72	$228.80	9	
Final grading for BCRs	ft^2	12,057	$ 0.49	$5,877.94	11	
Basin floor concrete volume	yd^3	297	$ 468.00	$138,826.45	12	
Basin wall concrete volume	yd^3	162	$ 520.00	$84,438.17	14	Quantity is increased to account for multiple BCRs
Stem wall concrete volume	yd^3	7	$ 468.00	$3,170.25	15	Quantity is increased to account for multiple BCRs
Concrete wall pumping costs	yd^3	12	$ 53.95	$662.46	16	Quantity is increased to account for multiple BCRs
Water stop, rib 3/8" x 6"	ft	623	$ 10.60	$6,602.36	17	Quantity is increased to account for multiple BCRs
Top wall float fin 1/16"	ft	1,246	$ 2.31	$2,883.97	18	Quantity is increased to account for multiple BCRs
Place fill for berms	yd^3	186	$ 24.77	$4,597.27	19	Berm volume from BCR design multiplied by the number of BCR cells
Compact berms	yd^3	186	$ 1.95	$361.99	20	
Install drainage gravel	yd^3	141	$ 79.39	$11,178.67	21	
Install perforated pipe	ft	1821	$ 27.02	$49,184.29	22	
Install solid pipe	ft	436	$ 30.42	$13,264.39	20	
Reducing tee 4" by 4" by 2" -Sch. 80 PVC	each	115	$ 130.40	$15,000.10	24	
Tee 4" Sch. 80 PVC	each	6	$ 138.68	$832.08	22	
90° Elbow 4" Sch. 80 PVC	each	8	$ 94.83	$758.64	26	
45° Elbow Sch. 80 PVC	each	2	$ 162.74	$325.48	27	
Pipe cap 2" Sch. 40 PVC	each	58	$ 28.96	$1,665.66	28	
Pipe cap 4" Sch. 40 PVC	each	4	$ 68.41	$273.64	29	
Water level control structure	each	2	$ 840.00	$1,680.00	30	
Install substrate	yd^3	1,493	$ 48.87	$72,981.22	33	
Install woodchips	yd^3	1,034	$ 25.44	$26,304.70	34	
Install cover liner	ft^2	7021	$ 0.80	$5,617.18	35	
Install cover geotextile	ft^2	7021	$ 0.32	$2,245.70	36	Geotextile under liner
			Subtotal	**$ 481,133**		
Settling Basin						
Excavate	yd^3	598	$ 22.43	$13,409.15	8	
Compact sub grade	ft^2	3,844	$ 0.72	$2,748.46	9	
Final grading	ft^2	6,400	$ 0.49	$3,120.00	11	
Basin floor concrete volume	yd^3	100	$ 468.00	$46,858.26	13	
Basin wall concrete volume	yd^3	38	$ 520.00	$19,524.27	14	
Stem wall concrete volume	yd^3	3	$ 468.00	$1,585.13	15	
Concrete wall pumping costs	yd^3	2	$ 53.95	$81.79	16	
Water stop, rib 3/8" x 6"	ft	256	$ 10.60	$2,712.32	17	
Top wall float fin 1/16"	ft	256	$ 2.31	$592.38	18	
Place fill for berms	yd^3	45	$ 24.77	$1,110.23	19	
Compact berms	yd^3	1.66	$ 1.95	$3.24	20	
Water level control structure	each	3	$ 840.00	$2,520.00	30	
			Subtotal	**$ 94,265.23**		
Mixing Basin						
Excavate	yd^3	606	$ 22.43	$13,590.46	8	
Compact sub grade	ft^2	3,961	$ 0.72	$2,831.76	9	
Final grading	yd^3	16	$ 0.49	$7.65	11	
Basin floor concrete volume	yd^3	103	$ 468.00	$48,408.38	13	
Basin wall concrete volume	yd^3	35	$ 520.00	$18,176.89	14	
Stem wall concrete volume	yd^3	3	$ 468.00	$1,585.13	15	
Concrete wall pumping costs	yd^3	38	$ 53.95	$2,068.58	16	
Water stop, rib 3/8" x 6"	ft	275	$ 10.60	$2,913.63	17	
Top wall float fin 1/16"	ft	275	$ 2.31	$636.35	18	
Place fill for berms	yd^3	16	$ 24.77	$388.78	19	
Compact berms	yd^3	16	$ 1.95	$30.61	20	
Water level control structure	each	1	840	$840.00	30	
			Subtotal	**$ 91,478.22**		
Piping Between PTS Components						
Pipe from settling basin to BCR	ft	200	$ 30.42	$6,083.00	20	Quantity estimated
pipe from BCR to mixing basin	ft	100	$ 30.42	$3,041.50	20	Quantity estimated
pipe from settling basin to mixing basin	ft	400	$ 30.42	$12,166.00	20	Quantity estimated
pipe from mixing basin to aeration channel	ft	50	$ 30.42	$1,520.75	20	Quantity estimated
pipe from settling pond to creek	ft	200	$ 30.42	$6,083.00	20	Quantity estimated
Cleanouts	each	38	$ 843.40	$32,049.20	31	Estimate based on cleanouts in both directions spaced every 50 ft
Misc. pipe fittings	ls	1	$ 2,575.70	$2,575.70	24, 25	Estimate, 10 45° elbows, 10 90° elbows
Pipe trench excavation	yd^3	422	$ 4.84	$2,041.87	39	
Bedding installation	yd^3	211	$ 58.50	$12,350.00	9	
Trench backfill	ft	422	$ 1.26	$532.63	40	
			Subtotal	**$ 78,443.64**		

Table A5: Estimated Capital Costs for Alternative 2
Standard Mine Superfund Site Feasibility Study
Crested Butte, Colorado
October 16, 2009

Item	Units	Quantity	Unit Cost	Extended Cost	Unit Cost Reference No.	Notes
Aeration Channel						
Channel excavation	yd^3	290	$ 8.26	$2,393.94	32	Calculated based on channel dimensions, 1:3, H:V side slopes
Geotextile install	ft^2	19,333	$ 0.32	$6,183.33	36	Calculated based on channel dimensions, 1:3, H:V side slopes
Liner Install	ft^2	19,333	$ 0.80	$15,466.38	35	Same as geotextile install
Rip Rap fill	yd^3	290	$ 78.00	$22,619.95	38	
			Subtotal	**$ 46,663.60**		
Monitoring Equipment						
Flume with protective box	each	4	$ 2,853.75	$11,415.00	32	Influent, effluent, 2 on BCR influents, 1 on mixing pond MIW influent, 1 on mixing pond bypass
ISCO auto samplers	each	2	$ 2,979.77	$5,959.53	41	Influent and effluent
Flow bubbler modules	each	2	$ 1,966.50	$3,933.00	42	Influent and effluent
Solar power supply system	each	2	$ 7,912.00	$15,824.00	43	Pilot solar costs x 2 to account for increase in power demands
Small shed to house equipment	each	2	$ 5,000.00	$10,000.00		Estimate
			Subtotal	**$ 47,131.53**		
Direct Costs				**$ 890,002.04**		Sum of above subtotals
Indirect Costs						
Mobilization				$ 115,700.26		13% of direct costs
Scope contingency				$ 155,750.36		17.5% of direct costs[2,3]
Bid contingency				$ 311,500.71		20% of direct costs[2,3]
Total Construction Costs[4]				**$ 1,472,953.37**		
Engineering design				$ 220,943.01		15% of construction costs
Project management				$ 117,836.27		8% of total construction cost[2]
Construction management				$ 147,295.34		10% of total Construction Costs[2]
Estimate of Total Capital Cost				**$ 1,960,000.00**		

Notes:

1) No calculations were rounded until the final total to aid computation accuracy

2) Cost is based on the EPA CERCLA Cost Estimating Guidance document percentages (Table 5-8) for a project in the $100K to $500K capital cost range.

3) Scope contingency is estimated in the middle of the EPA CERCLA acceptable range because of two years of pilot system operation. Bid Contingency is estimated on the high end of the acceptable range because of the uniqueness of the project, which may be viewed by contractors as somewhat risky when compared to "typical" construction projects.

4) Total construction costs include direct costs, mobilization, scope contingency and bid contingency

Table A6: Estimated Operations and Maintenance Costs for Alternative 2
Standard Mine Superfund Site Feasibility Study
Crested Butte, Colorado
October 16, 2009

Item	Units	Quantity	Unit Cost	Extended Cost	Notes
Annual Operation and Maintenance Costs					
Sampling and Site Inspection					
Quarterly monitoring event	ls	1	$ 10,000	$ 10,000	Estimate
Annual report preparation	ls	1	$ 5,000	$ 5,000	Estimate
General site maintenance	ls	1	$ 10,000	$ 10,000	Estimate
			Total Annual costs	**$ 25,000**	
5-Year Operation & Maintenance Costs					
Sludge Removal and Disposal					
Pump out Sludge using sump Pump	yd^3	651		$ -	
Dispose of dewatered sludge	yd^3	326	$ 29.68	$ 200.00	Assumed 50% volume reduction of sludge to solids
Geotube purchase	each	4	$ 2,170.00	$ 8,680.00	Vendor quote, project experience
Roll-off dumpster rental	each	4	$ 500.00	$ 2,000.00	estimate
Sludge pump rental	ls	2	$ 500.00	$ 1,000.00	estimate
Field work for dewatering mixing pond	ls	2	$ 10,000.00	$ 20,000.00	estimate
Sludge disposal costs	yd^3	326	$ 29.68	$ 29.68	estimate
			Subtotal	$ 31,909.68	
Mobilization				$ 4,148.26	13% of direct costs[2,3]
Scope Contingency				$ 6,381.94	20% ofdirect costs[2,3]
Bid Contingency				$ 12,763.87	20% of direct costs[2,3]
			Subtotal	$ 55,203.75	
Engineering Support - Permitting, substrate disposal support, etc				$ 8,280.56	15% of Subtotal
Project management				$ 4,416.30	8% of subtotal[3]
Construction Management				$ 5,520.37	10% of subtotal[3]
			Total Sludge Disposal Costs	$ 73,420.98	
5-year Monitoring Event and Report	ls	1	$ 20,000	$ 20,000	Estimate
			Total 5-year costs	**$ 118,420.98**	includes annual and 5-year costs
15-Year O& M Costs					
BCR Media Replacement					
Excavate BCR woodchip cover	yd^3	1,034	$ 22.43	$ 23,183.57	Excavation costs for BCR cell
Excavate spent BCR media	yd^3	1,493	$ 22.43	$ 33,488.03	Excavation costs for BCR cell
New media install	yd^3	1,493	$ 48.87	$ 72,981.22	Substrate placement costs
Install woodchip cover	yd^3	1,034	$ 2.44	$ 2,522.54	Unit cost for placing fill. Assume woodchips will be reused
Install cover liner	ft^2	2,752	$ 2.44	$ 7,226.78	Labor costs to replace liner, plus $500 for material repairs
Dispose of spent BCR media	yd^3	1,493	$ 29.68	$ 44,322.17	Unit cost reference # 42
			Subtotal	$ 183,724.32	
Mobilization				$ 23,884.16	13% of direct costs[2,3]
Scope Contingency				$ 36,744.86	20% of direct costs[2,3]
Bid Contingency				$ 73,489.73	20% of direct costs[2,3]
			Subtotal	$ 317,843.07	
Engineering Support - Permitting, substrate disposal support, etc				$ 47,676.46	15% of Subtotal
Project management				$ 25,427.45	8% of subtotal[3]
Construction Management				$ 31,784.31	10% of subtotal[3]
			Total BCR Replacement Costs	$ 422,731.29	
Total 15-Year Costs				**$ 542,000**	includes annual, 5-year costs, and 15-year costs

Notes:
1) Most unit rates were developed from RS Means Heavy Construction Cost Data, 2009 Edition, adjusted for site conditions.
2) Cost is based on the EPA CERCLA Cost Estimating Guidance document percentages (Table 5-8) for a project in the $100K to $500K capital cost range.
3) Scope contingency is estimated in the middle of the EPA CERCLA acceptable range because of two years of pilot system operation. Bid Contingency is estimated on the high end of the acceptable range because of the uniqueness of the project, which may be viewed by contractors as somewhat risky when compared to "typical" construction

Table A7: Alternative 2 Cost Estimate Schedule and Net Present Value Assessment
Standard Mine Superfund Site Feasibility Study
Crested Butte, Colorado

Year	Cost item Summary	Estimated Cost	Discount Factor[1]	NPV
0	System Construction	$1,960,000	1.00	$1,960,000
1	Annual Maintenance	$25,000	0.93	$23,400
2	Annual Maintenance	$25,000	0.87	$21,800
3	Annual Maintenance	$25,000	0.82	$20,400
4	Annual Maintenance	$25,000	0.76	$19,100
5	5-year maintenance, solids/sludge removal	$118,421	0.71	$84,400
6	Annual Maintenance	$25,000	0.67	$16,700
7	Annual Maintenance	$25,000	0.62	$15,600
8	Annual Maintenance	$25,000	0.58	$14,600
9	Annual Maintenance	$25,000	0.54	$13,600
10	5-year maintenance, solids/sludge removal	$118,421	0.51	$60,200
11	Annual Maintenance	$25,000	0.48	$11,900
12	Annual Maintenance	$25,000	0.44	$11,100
13	Annual Maintenance	$25,000	0.41	$10,400
14	Annual Maintenance	$25,000	0.39	$9,700
15	15-year maintenance (BCR media replacement), 5-year maintenance, and annual maintenance	$542,000	0.36	$196,400
16	Annual Maintenance	$25,000	0.34	$8,500
17	Annual Maintenance	$25,000	0.32	$7,900
18	Annual Maintenance	$25,000	0.30	$7,400
19	Annual Maintenance	$25,000	0.28	$6,900
20	5-year maintenance, solids/sludge removal	$118,421	0.26	$30,600
21	Annual Maintenance	$25,000	0.24	$6,000
22	Annual Maintenance	$25,000	0.23	$5,600
23	Annual Maintenance	$25,000	0.21	$5,300
24	Annual Maintenance	$25,000	0.20	$4,900
25	5-year maintenance, solids/sludge removal	$118,421	0.18	$21,800
26	Annual Maintenance	$25,000	0.17	$4,300
27	Annual Maintenance	$25,000	0.16	$4,000
28	Annual Maintenance	$25,000	0.15	$3,800
29	Annual Maintenance	$25,000	0.14	$3,500
30	15-year maintenance (BCR media replacement), 5-year maintenance, and annual maintenance	$542,000	0.13	$71,200
Total		**$3,576,000**		**$2,610,000**

Notes

1) Discount rate of 7% was employed based on EPA's *A Guide to Developing and Documenting Cost Estimates During the Feasibility Study* (2000)

Table A8: Estimated Capital Costs for Alternative 3
Standard Mine Superfund Site Feasibility Study
Crested Butte, Colorado
October 16, 2009

Item	Units	Quantity	Unit Cost	Extended Cost	Unit Cost Reference No.	Notes
Direct Costs						
General Site Work						
Clear and grub site	ft^2	50,093	$ 0.17	$8,334.43	1	Total footprint of passive treatment system
Remove topsoil	yd^3	928	$ 2.12	$1,965.68	2	Footprint of BCR, settling basin, and mixing basin*topsoil thickness
Access road relocation	ls	1.0	$ 25,000.00	$25,000.00		Estimate
Survey lines and grades	acres	1.15	$ 4,712.50	$5,419.25	3	Total site footprint
Geotechnical report	ls	1.0	$ 18,000.00	$18,000.00	4	estimate
Silt fence	ft	448	$ 1.64	$733.22	5	2 square sides of total footprint - assume 2 sides need fencing
Install staked hay bales	ft	45	$ 10.53	$471.35	6	10 ft spacing along fence
Fence and hay bale removal	ls	1.0		$602.28		Estimate, half of installation costs
Seeding berms and disturbed area	yd^2	170	$ 0.43	$73.37	7	Clear and grub area - top area of PTS unit operations
			Subtotal	**$60,599.58**		
Biochemical Reactors						
Excavate BCR	yd^3	3,061	$ 22.43	$68,631.73	8	
Compact sub grade	yd^3	683	$ 0.72	$488.11	9	
Final grading for BCRs	ft^2	25,358	$ 0.49	$12,362.03	11	
Basin floor concrete volume	yd^3	934	$ 468.00	$437,079.64	12	
Basin wall concrete volume	yd^3	529	$ 520.00	$275,245.28	14	Quantity is increased to account for multiple BCRs
Stem wall concrete volume	yd^3	10	$ 468.00	$4,755.38	15	Quantity is increased to account for multiple BCRs
Concrete wall pumping costs	yd^3	59	$ 53.95	$3,193.27	16	Quantity is increased to account for multiple BCRs
Water stop, rib 3/8" x 6"	ft	903	$ 10.60	$9,565.28	17	Quantity is increased to account for multiple BCRs
Top wall float fin 1/16"	ft	1,806	$ 2.31	$4,178.21	18	Quantity is increased to account for multiple BCRs
Place fill for berms	yd^3	399	$ 24.77	$9,887.39	19	Berm volume from BCR design multiplied by the number of BCR cells
Compact berms	yd^3	399	$ 1.95	$778.53	20	
Install drainage gravel	yd^3	451	$ 79.39	$35,771.76	21	
Install perforated pipe	ft	4409	$ 27.02	$119,105.35	22	
Install solid pipe	ft	916	$ 30.42	$27,870.62	20	
Reducing tee 4" by 4" by 2" -Sch. 80 PVC	each	256	$ 130.40	$33,440.17	24	
Tee 4" Sch. 80 PVC	each	9	$ 138.68	$1,248.12	22	
90° Elbow 4" Sch. 80 PVC	each	12	$ 94.83	$1,137.96	26	
45° Elbow Sch. 80 PVC	each	3	$ 162.74	$488.22	27	
Pipe cap 2" Sch. 40 PVC	each	85	$ 28.96	$2,475.53	28	
Pipe cap 4" Sch. 40 PVC	each	4	$ 68.41	$273.64	29	
Water level control structure	each	2	$ 840.00	$1,680.00	30	
Install substrate	yd^3	3,186	$ 48.87	$155,693.23	33	
Install woodchips	yd^3	3,341	$ 25.44	$85,002.59	34	
Install cover liner	ft^2	14102	$ 0.80	$11,281.41	35	
Install cover geotextile	ft^2	14102	$ 0.32	$4,510.21	36	Geotextile under liner
			Subtotal	**$ 1,306,144**		
Settling Basin						
Excavate	yd^3	1,715	$ 22.43	$38,458.87	8	
Compact sub grade	ft^2	11,025	$ 0.72	$7,882.88	9	
Final grading	ft^2	15,129	$ 0.49	$7,375.39	11	
Basin floor concrete volume	yd^3	280	$ 468.00	$130,976.59	13	
Basin wall concrete volume	yd^3	63	$ 520.00	$32,642.14	14	
Stem wall concrete volume	yd^3	3	$ 468.00	$1,585.13	15	
Concrete wall pumping costs	yd^3	2	$ 53.95	$132.20	16	
Water stop, rib 3/8" x 6"	ft	428	$ 10.60	$4,534.66	17	
Top wall float fin 1/16"	ft	428	$ 2.31	$990.39	18	
Place fill for berms	yd^3	75	$ 24.77	$1,848.50	19	
Compact berms	yd^3	2.76	$ 1.95	$5.39	20	
Water level control structure	each	3	$ 840.00	$2,520.00	30	
			Subtotal	**$ 228,952.13**		
Mixing Basin						
Excavate	yd^3	1,760	$ 22.43	$39,469.17	8	
Compact sub grade	ft^2	11,424	$ 0.72	$8,167.83	9	
Final grading	yd^3	26	$ 0.49	$12.70	11	
Basin floor concrete volume	yd^3	290	$ 468.00	$135,918.63	13	
Basin wall concrete volume	yd^3	59	$ 520.00	$30,501.32	14	
Stem wall concrete volume	yd^3	3	$ 468.00	$1,585.13	15	
Concrete wall pumping costs	yd^3	62	$ 53.95	$3,347.24	16	
Water stop, rib 3/8" x 6"	ft	461	$ 10.60	$4,889.14	17	
Top wall float fin 1/16"	ft	461	$ 2.31	$1,067.81	18	
Place fill for berms	yd^3	26	$ 24.77	$645.27	19	
Compact berms	yd^3	26	$ 1.95	$50.81	20	
Water level control structure	each	1	840	$840.00	30	
			Subtotal	**$ 226,495.05**		
Piping Between PTS Components						
Pipe from settling basin to BCR	ft	200	$ 30.42	$6,083.00	20	Quantity estimated
pipe from BCR to mixing basin	ft	100	$ 30.42	$3,041.50	20	Quantity estimated
pipe from settling basin to mixing basin	ft	400	$ 30.42	$12,166.00	20	Quantity estimated
pipe from mixing basin to aeration channel	ft	50	$ 30.42	$1,520.75	20	Quantity estimated
pipe from settling pond to creek	ft	200	$ 30.42	$6,083.00	20	Quantity estimated
Cleanouts	each	38	$ 843.40	$32,049.20	31	Estimate based on cleanouts in both directions spaced every 50 ft
Misc. pipe fittings	ls	1	$ 2,575.70	$2,575.70	24, 25	Estimate, 10 45° elbows, 10 90° elbows
Pipe trench excavation	yd^3	422	$ 4.84	$2,041.87	39	
Bedding installation	yd^3	211	$ 58.50	$12,350.00	9	
Trench backfill	ft	422	$ 1.26	$532.63	40	
			Subtotal	**$ 78,443.64**		
Aeration Channel						
Channel excavation	yd^3	227	$ 8.26	$1,873.45	32	Calculated based on channel dimensions, 1:3, H:V side slopes
Geotextile install	ft^2	15,130	$ 0.32	$4,838.93	36	Calculated based on channel dimensions, 1:3, H:V side slopes
Liner Install	ft^2	15,130	$ 0.80	$12,103.63	35	Same as geotextile install
Rip Rap fill	yd^3	227	$ 78.00	$17,701.85	38	
			Subtotal	**$ 36,517.85**		
Monitoring Equipment						

Table A8: Estimated Capital Costs for Alternative 3
Standard Mine Superfund Site Feasibility Study
Crested Butte, Colorado
October 16, 2009

Item	Units	Quantity	Unit Cost	Extended Cost	Unit Cost Reference No.	Notes
Flume with protective box	each	4	$ 2,853.75	$11,415.00	32	Influent, effluent, 2 on BCR influents, 1 on mixing pond MIW influent, 1 on mixing pond bypass
ISCO auto samplers	each	2	$ 2,979.77	$5,959.53	41	Influent and effluent
Flow bubbler modules	each	2	$ 1,966.50	$3,933.00	42	Influent and effluent
Solar power supply system	each	2	$ 7,912.00	$15,824.00	43	Pilot solar costs x 2 to account for increase in power demands
Small shed to house equipment	each	2	$ 5,000.00	$10,000.00		Estimate
			Subtotal	**$ 47,131.53**		
Direct Costs				**$ 1,984,283.44**		Sum of above subtotals
Indirect Costs						
Mobilization				$ 257,956.85		13% of direct costs
Scope contingency				$ 347,249.60		17.5% of direct costs[2,3]
Bid contingency				$ 694,499.20		20% of direct costs[2,3]
Total Construction Costs[4]				**$ 3,283,989.09**		
Engineering design				$ 492,598.36		15% of construction costs
Project management				$ 262,719.13		8% of total construction cost[2]
Construction management				$ 328,398.91		10% of total Construction Costs[2]
Estimate of Total Capital Cost				**$ 4,368,000.00**		

Notes:

1) No calculations were rounded until the final total to aid computation accuracy

2) Cost is based on the EPA CERCLA Cost Estimating Guidance document percentages (Table 5-8) for a project in the $100K to $500K capital cost range.

3) Scope contingency is estimated in the middle of the EPA CERCLA acceptable range because of two years of pilot system operation. Bid Contingency is estimated on the high end of the acceptable range because of the uniqueness of the project, which may be viewed by contractors as somewhat risky when compared to "typical" construction projects.

4) Total construction costs include direct costs, mobilization, scope contingency and bid contingency

Table A9: Estimated Operations and Maintenance Costs for Alternative 3
Standard Mine Superfund Site Feasibility Study
Crested Butte, Colorado
October 16, 2009

Item	Units	Quantity	Unit Cost	Extended Cost	Notes
Annual Operation and Maintenance Costs					
Sampling and Site Inspection					
Quarterly monitoring event	ls	1	$ 10,000	$ 10,000	Estimate
Annual report preparation	ls	1	$ 5,000	$ 5,000	Estimate
General site maintenance	ls	1	$ 10,000	$ 10,000	Estimate
			Total Annual costs	**$ 25,000**	
5-Year Operation & Maintenance Costs					
Sludge Removal and Disposal					
Pump out Sludge using sump Pump	yd^3	2,083		$ -	
Dispose of dewatered sludge	yd^3	1,042	$ 29.68	$ 200.00	Assumed 50% volume reduction of sludge to solids
Geotube purchase	each	10	$ 2,170.00	$ 21,700.00	Vendor quote, project experience
Roll-off dumpster rental	each	10	$ 500.00	$ 5,000.00	estimate
Sludge pump rental	ls	4	$ 500.00	$ 2,000.00	estimate
Field work for dewatering mixing pond	ls	4	$ 10,000.00	$ 40,000.00	estimate
Sludge disposal costs	yd^3	1,042	$ 29.68	$ 29.68	estimate
			Subtotal	$ 68,929.68	
Mobilization				$ 8,960.86	13% of direct costs[2,3]
Scope Contingency				$ 13,785.94	20% ofdirect costs[2,3]
Bid Contingency				$ 27,571.87	20% of direct costs[2,3]
			Subtotal	$ 119,248.35	
Engineering Support - Permitting, substrate disposal support, etc				$ 17,887.25	15% of Subtotal
Project management				$ 9,539.87	8% of subtotal[3]
Construction Management				$ 11,924.83	10% of subtotal[3]
			Total Sludge Disposal Costs	$ 158,600.30	
5-year Monitoring Event and Report	ls	1	$ 20,000	$ 20,000	Estimate
			Total 5-year costs	**$ 203,600.30**	includes annual and 5-year costs
15-Year O& M Costs					
BCR Media Replacement					
Excavate BCR woodchip cover	yd^3	3,341	$ 22.43	$ 74,916.80	Excavation costs for BCR cell
Excavate spent BCR media	yd^3	3,186	$ 22.43	$ 71,441.11	Excavation costs for BCR cell
New media install	yd^3	3,186	$ 48.87	$ 155,693.23	Substrate placement costs
Install woodchip cover	yd^3	3,341	$ 2.44	$ 8,151.48	Unit cost for placing fill. Assume woodchips will be reused
Install cover liner	ft^2	2,752	$ 2.44	$ 7,226.78	Labor costs to replace liner, plus $500 for material repairs
Dispose of spent BCR media	yd^3	3,186	$ 29.68	$ 94,553.94	Unit cost reference # 42
			Subtotal	$ 411,983.35	
Mobilization				$ 53,557.84	13% of direct costs[2,3]
Scope Contingency				$ 82,396.67	20% of direct costs[2,3]
Bid Contingency				$ 164,793.34	20% of direct costs[2,3]
			Subtotal	$ 712,731.19	
Engineering Support - Permitting, substrate disposal support, etc				$ 106,909.68	15% of Subtotal
Project management				$ 57,018.50	8% of subtotal[3]
Construction Management				$ 71,273.12	10% of subtotal[3]
			Total BCR Replacement Costs	$ 947,932.49	
Total 15-Year Costs				**$ 1,152,000**	includes annual, 5-year costs, and 15-year costs

Notes:
1) Most unit rates were developed from RS Means Heavy Construction Cost Data, 2009 Edition, adjusted for site conditions.
2) Cost is based on the EPA CERCLA Cost Estimating Guidance document percentages (Table 5-8) for a project in the $100K to $500K capital cost range.
3) Scope contingency is estimated in the middle of the EPA CERCLA acceptable range because of two years of pilot system operation. Bid Contingency is estimated on the high end of the acceptable range because of the uniqueness of the project, which may be viewed by contractors as somewhat risky when compared to "typical" construction

Table A10: Alternative 3 Cost Estimate Schedule and Net Present Value Assessment
Standard Mine Superfund Site Feasibility Study
Crested Butte, Colorado

Year	Cost item Summary	Estimated Cost	Discount Factor[1]	NPV
0	System Construction	$4,368,000	1.00	$4,368,000
1	Annual Maintenance	$25,000	0.93	$23,400
2	Annual Maintenance	$25,000	0.87	$21,800
3	Annual Maintenance	$25,000	0.82	$20,400
4	Annual Maintenance	$25,000	0.76	$19,100
5	5-year maintenance, solids/sludge removal	$203,600	0.71	$145,200
6	Annual Maintenance	$25,000	0.67	$16,700
7	Annual Maintenance	$25,000	0.62	$15,600
8	Annual Maintenance	$25,000	0.58	$14,600
9	Annual Maintenance	$25,000	0.54	$13,600
10	5-year maintenance, solids/sludge removal	$203,600	0.51	$103,500
11	Annual Maintenance	$25,000	0.48	$11,900
12	Annual Maintenance	$25,000	0.44	$11,100
13	Annual Maintenance	$25,000	0.41	$10,400
14	Annual Maintenance	$25,000	0.39	$9,700
15	15-year maintenance (BCR media replacement), 5-year maintenance, and annual maintenance	$1,152,000	0.36	$417,500
16	Annual Maintenance	$25,000	0.34	$8,500
17	Annual Maintenance	$25,000	0.32	$7,900
18	Annual Maintenance	$25,000	0.30	$7,400
19	Annual Maintenance	$25,000	0.28	$6,900
20	5-year maintenance, solids/sludge removal	$203,600	0.26	$52,600
21	Annual Maintenance	$25,000	0.24	$6,000
22	Annual Maintenance	$25,000	0.23	$5,600
23	Annual Maintenance	$25,000	0.21	$5,300
24	Annual Maintenance	$25,000	0.20	$4,900
25	5-year maintenance, solids/sludge removal	$203,600	0.18	$37,500
26	Annual Maintenance	$25,000	0.17	$4,300
27	Annual Maintenance	$25,000	0.16	$4,000
28	Annual Maintenance	$25,000	0.15	$3,800
29	Annual Maintenance	$25,000	0.14	$3,500
30	15-year maintenance (BCR media replacement), 5-year maintenance, and annual maintenance	$1,152,000	0.13	$151,300
Total		**$6,935,000**		**$5,381,000**

Notes

1) Discount rate of 7% was employed based on EPA's *A Guide to Developing and Documenting Cost Estimates During the Feasibility Study* (2000)

Table A11: Estimated Capital Costs for Alternative 4
Standard Mine Superfund Site Feasibility Study
Crested Butte, Colorado
October 16, 2009

Item	Units	Quantity	Unit Cost	Extended Cost	Unit Cost Reference No.	Notes
Direct Costs						
General Site Work						
Clear and grub site	ft^2	45,485	$ 0.17	$7,567.70	1	Total footprint of passive treatment system
Remove topsoil	yd^3	842	$ 2.12	$1,784.85	2	Footprint of BCR, settling basin, and mixing basin*topsoil thickness
Access road relocation	ls	1.0	$ 25,000.00	$25,000.00		Estimate
Survey lines and grades	acres	1.04	$ 4,712.50	$4,920.70	3	Total site footprint
Geotechnical report	ls	1.0	$ 18,000.00	$18,000.00	4	estimate
Silt fence	ft	427	$ 1.64	$698.68	5	2 square sides of total footprint - assume 2 sides need fencing
Install staked hay bales	ft	43	$ 10.53	$449.15	6	10 ft spacing along fence
Fence and hay bale removal	ls	1.0		$573.91		Estimate, half of installation costs
Seeding berms and disturbed area	yd^2	126	$ 0.43	$54.41	7	Clear and grub area - top area of PTS unit operations
			Subtotal	**$59,049.40**		
Biochemical Reactors						
Excavate BCR	yd^3	3,985	$ 22.43	$89,364.23	8	
Compact sub grade	yd^3	889	$ 0.72	$635.56	9	
Final grading for BCRs	ft^2	32,892	$ 0.49	$16,034.61	11	
Basin floor concrete volume	yd^3	1,211	$ 468.00	$566,622.60	12	
Basin wall concrete volume	yd^3	603	$ 520.00	$313,391.01	14	Quantity is increased to account for multiple BCRs
Stem wall concrete volume	yd^3	10	$ 468.00	$4,755.38	15	Quantity is increased to account for multiple BCRs
Concrete wall pumping costs	yd^3	67	$ 53.95	$3,633.01	16	Quantity is increased to account for multiple BCRs
Water stop, rib 3/8" x 6"	ft	1,028	$ 10.60	$10,890.91	17	Quantity is increased to account for multiple BCRs
Top wall float fin 1/16"	ft	2,056	$ 2.31	$4,757.26	18	Quantity is increased to account for multiple BCRs
Place fill for berms	yd^3	453	$ 24.77	$11,225.80	19	Berm volume from BCR design multiplied by the number of BCR cells
Compact berms	yd^3	453	$ 1.95	$883.92	20	
Install drainage gravel	yd^3	587	$ 79.39	$46,577.81	21	
Install perforated pipe	ft	5160	$ 27.02	$139,385.86	22	
Install solid pipe	ft	1,034	$ 30.42	$31,438.26	20	
Reducing tee 4" by 4" by 2" -Sch. 80 PVC	each	294	$ 130.40	$38,334.81	24	
Tee 4" Sch. 80 PVC	each	9	$ 138.68	$1,248.12	22	
90° Elbow 4" Sch. 80 PVC	each	12	$ 94.83	$1,137.96	26	
45° Elbow Sch. 80 PVC	each	3	$ 162.74	$488.22	27	
Pipe cap 2" Sch. 40 PVC	each	98	$ 28.96	$2,837.87	28	
Pipe cap 4" Sch. 40 PVC	each	4	$ 68.41	$273.64	29	
Water level control structure	each	2	$ 840.00	$1,680.00	30	
Install substrate	yd^3	4,148	$ 48.87	$202,725.55	33	
Install woodchips	yd^3	4,361	$ 25.44	$110,972.90	34	
Install cover liner	ft^2	18061	$ 0.80	$14,448.69	35	
Install cover geotextile	ft^2	18061	$ 0.32	$5,776.47	36	Geotextile under liner
			Subtotal	**$ 1,619,520**		
Settling Basin						
Excavate	yd^3	1,464	$ 22.43	$32,821.73	8	
Compact sub grade	ft^2	9,409	$ 0.72	$6,727.44	9	
Final grading	ft^2	12,860	$ 0.49	$6,269.04	11	
Basin floor concrete volume	yd^3	240	$ 468.00	$112,123.46	13	
Basin wall concrete volume	yd^3	50	$ 520.00	$26,174.72	14	
Stem wall concrete volume	yd^3	3	$ 468.00	$1,585.13	15	
Concrete wall pumping costs	yd^3	2	$ 53.95	$107.35	16	
Water stop, rib 3/8" x 6"	ft	396	$ 10.60	$4,195.62	17	
Top wall float fin 1/16"	ft	396	$ 2.31	$916.34	18	
Place fill for berms	yd^3	29	$ 24.77	$727.66	19	
Compact berms	yd^3	1.09	$ 1.95	$2.12	20	
Water level control structure	each	3	$ 840.00	$2,520.00	30	
			Subtotal	**$ 194,170.60**		
Piping Between PTS Components						
Pipe from settling basin to BCR	ft	200	$ 30.42	$6,083.00	20	Quantity estimated
pipe from BCR to mixing basin	ft	100	$ 30.42	$3,041.50	20	Quantity estimated
pipe from settling basin to mixing basin	ft	400	$ 30.42	$12,166.00	20	Quantity estimated
pipe from mixing basin to aeration channel	ft	50	$ 30.42	$1,520.75	20	Quantity estimated
pipe from settling pond to creek	ft	200	$ 30.42	$6,083.00	20	Quantity estimated
Cleanouts	each	38	$ 843.40	$32,049.20	31	Estimate based on cleanouts in both directions spaced every 50 ft
Misc. pipe fittings	ls	1	$ 2,575.70	$2,575.70	24, 25	Estimate, 10 45° elbows, 10 90° elbows
Pipe trench excavation	yd^3	422	$ 4.84	$2,041.87	39	
Bedding installation	yd^3	211	$ 58.50	$12,350.00	9	
Trench backfill	ft	422	$ 1.26	$532.63	40	
			Subtotal	**$ 78,443.64**		

Table A11: Estimated Capital Costs for Alternative 4
Standard Mine Superfund Site Feasibility Study
Crested Butte, Colorado
October 16, 2009

Item	Units	Quantity	Unit Cost	Extended Cost	Unit Cost Reference No.	Notes
Aeration Channel						
Channel excavation	yd^3	225	$ 8.26	$1,859.43	32	Calculated based on channel dimensions, 1:3, H:V side slopes
Geotextile install	ft^2	15,016	$ 0.32	$4,802.72	36	Calculated based on channel dimensions, 1:3, H:V side slopes
Liner Install	ft^2	15,016	$ 0.80	$12,013.05	35	Same as geotextile install
Rip Rap fill	yd^3	225	$ 78.00	$17,569.37	38	
			Subtotal	**$ 36,244.57**		
Monitoring Equipment						
Flume with protective box	each	4	$ 2,853.75	$11,415.00	32	Influent, effluent, 2 on BCR influents, 1 on mixing pond MIW influent, 1 on mixing pond bypass
ISCO auto samplers	each	2	$ 2,979.77	$5,959.53	41	Influent and effluent
Flow bubbler modules	each	2	$ 1,966.50	$3,933.00	42	Influent and effluent
Solar power supply system	each	2	$ 7,912.00	$15,824.00	43	Pilot solar costs x 2 to account for increase in power demands
Small shed to house equipment	each	2	$ 5,000.00	$10,000.00		Estimate
			Subtotal	**$ 47,131.53**		
Direct Costs				**$ 2,034,560.19**		Sum of above subtotals
Indirect Costs						
Mobilization				$ 264,492.82		13% of direct costs
Scope contingency				$ 356,048.03		17.5% of direct costs[2,3]
Bid contingency				$ 712,096.06		20% of direct costs[2,3]
Total Construction Costs[4]				**$ 3,367,197.11**		
Engineering design				$ 505,079.57		15% of construction costs
Project management				$ 269,375.77		8% of total construction cost[2]
Construction management				$ 336,719.71		10% of total Construction Costs[2]
Estimate of Total Capital Cost				**$ 4,479,000.00**		

Notes:

1) No calculations were rounded until the final total to aid computation accuracy

2) Cost is based on the EPA CERCLA Cost Estimating Guidance document percentages (Table 5-8) for a project in the $100K to $500K capital cost range.

3) Scope contingency is estimated in the middle of the EPA CERCLA acceptable range because of two years of pilot system operation. Bid Contingency is estimated on the high end of the acceptable range because of the uniqueness of the project, which may be viewed by contractors as somewhat risky when compared to "typical" construction projects.

4) Total construction costs include direct costs, mobilization, scope contingency and bid contingency

Table A12: Estimated Operations and Maintenance Costs for Alternative 4
Standard Mine Superfund Site Feasibility Study
Crested Butte, Colorado
October 16, 2009

Item	Units	Quantity	Unit Cost	Extended Cost	Notes
Annual Operation and Maintenance Costs					
Sampling and Site Inspection					
Quarterly monitoring event	ls	1	$ 10,000	$ 10,000	Estimate
Annual report preparation	ls	1	$ 5,000	$ 5,000	Estimate
General site maintenance	ls	1	$ 10,000	$ 10,000	Estimate
			Total Annual costs	**$ 25,000**	
5-Year Operation & Maintenance Costs					
Sludge Removal and Disposal					
Pump out Sludge using sump Pump	yd^3	814		$ -	
Dispose of dewatered sludge	yd^3	407	$ 29.68	$ 200.00	Assumed 50% volume reduction of sludge to solids
Geotube purchase	each	4	$ 2,170.00	$ 8,680.00	Vendor quote, project experience
Roll-off dumpster rental	each	4	$ 500.00	$ 2,000.00	estimate
Sludge pump rental	ls	2	$ 500.00	$ 1,000.00	estimate
Field work for dewatering mixing pond	ls	2	$ 10,000.00	$ 20,000.00	estimate
Sludge disposal costs	yd^3	407	$ 29.68	$ 12,077.34	Unit cost reference # 42
			Subtotal	$ 43,957.34	
Mobilization				$ 5,714.45	13% of direct costs[2,3]
Scope Contingency				$ 8,791.47	20% ofdirect costs[2,3]
Bid Contingency				$ 17,582.94	20% of direct costs[2,3]
			Subtotal	$ 76,046.20	
Engineering Support - Permitting, substrate disposal support, etc				$ 11,406.93	15% of Subtotal
Project management				$ 6,083.70	8% of subtotal[3]
Construction Management				$ 7,604.62	10% of subtotal[3]
			Total Sludge Disposal Costs	$ 101,141.44	
5-year Monitoring Event and Report	ls	1	$ 20,000	$ 20,000	Estimate
			Total 5-year costs	**$ 146,141.44**	includes annual and 5-year costs
15-Year O& M Costs					
BCR Media Replacement					
Excavate BCR woodchip cover	yd^3	4,361	$ 22.43	$ 97,805.67	Excavation costs for BCR cell
Excavate spent BCR media	yd^3	4,148	$ 22.43	$ 93,022.27	Excavation costs for BCR cell
New media install	yd^3	4,148	$ 48.87	$ 202,725.55	Substrate placement costs
Install woodchip cover	yd^3	4,361	$ 2.44	$ 10,641.95	Unit cost for placing fill. Assume woodchips will be reused
Install cover liner	ft^2	2,752	$ 0.17	$ 981.05	Labor costs to replace liner, plus $500 for material repairs
Dispose of spent BCR media	yd^3	4,148	$ 29.68	$ 123,117.11	Unit cost reference # 42
			Subtotal	$ 528,293.60	
Mobilization				$ 68,678.17	13% of direct costs[2,3]
Scope Contingency				$ 105,658.72	20% of direct costs[2,3]
Bid Contingency				$ 211,317.44	20% of direct costs[2,3]
			Subtotal	$ 913,947.93	
Engineering Support - Permitting, substrate disposal support, etc				$ 137,092.19	15% of Subtotal
Project management				$ 73,115.83	8% of subtotal[3]
Construction Management				$ 91,394.79	10% of subtotal[3]
			Total BCR Replacement Costs	$ 1,215,550.74	
Total 15-Year Costs				**$ 1,362,000**	includes annual, 5-year costs, and 15-year costs

Notes:
1) Most unit rates were developed from RS Means Heavy Construction Cost Data, 2009 Edition, adjusted for site conditions.
2) Cost is based on the EPA CERCLA Cost Estimating Guidance document percentages (Table 5-8) for a project in the $100K to $500K capital cost range.
3) Scope contingency is estimated in the middle of the EPA CERCLA acceptable range because of two years of pilot system operation. Bid Contingency is estimated on the high end of the acceptable range because of the uniqueness of the project, which may be viewed by contractors as somewhat risky when compared to "typical" construction

Table A13: Alternative 4 Cost Estimate Schedule and Net Present Value Assessment
Standard Mine Superfund Site Feasibility Study
Crested Butte, Colorado

Year	Cost item Summary	Estimated Cost	Discount Factor[1]	NPV
0	System Construction	$4,479,000	1.00	$4,479,000
1	Annual Maintenance	$25,000	0.93	$23,400
2	Annual Maintenance	$25,000	0.87	$21,800
3	Annual Maintenance	$25,000	0.82	$20,400
4	Annual Maintenance	$25,000	0.76	$19,100
5	5-year maintenance, solids/sludge removal	$146,141	0.71	$104,200
6	Annual Maintenance	$25,000	0.67	$16,700
7	Annual Maintenance	$25,000	0.62	$15,600
8	Annual Maintenance	$25,000	0.58	$14,600
9	Annual Maintenance	$25,000	0.54	$13,600
10	5-year maintenance, solids/sludge removal	$146,141	0.51	$74,300
11	Annual Maintenance	$25,000	0.48	$11,900
12	Annual Maintenance	$25,000	0.44	$11,100
13	Annual Maintenance	$25,000	0.41	$10,400
14	Annual Maintenance	$25,000	0.39	$9,700
15	15-year maintenance (BCR media replacement), 5-year maintenance, and annual maintenance	$1,362,000	0.36	$493,700
16	Annual Maintenance	$25,000	0.34	$8,500
17	Annual Maintenance	$25,000	0.32	$7,900
18	Annual Maintenance	$25,000	0.30	$7,400
19	Annual Maintenance	$25,000	0.28	$6,900
20	5-year maintenance, solids/sludge removal	$146,141	0.26	$37,800
21	Annual Maintenance	$25,000	0.24	$6,000
22	Annual Maintenance	$25,000	0.23	$5,600
23	Annual Maintenance	$25,000	0.21	$5,300
24	Annual Maintenance	$25,000	0.20	$4,900
25	5-year maintenance, solids/sludge removal	$146,141	0.18	$26,900
26	Annual Maintenance	$25,000	0.17	$4,300
27	Annual Maintenance	$25,000	0.16	$4,000
28	Annual Maintenance	$25,000	0.15	$3,800
29	Annual Maintenance	$25,000	0.14	$3,500
30	15-year maintenance (BCR media replacement), 5-year maintenance, and annual maintenance	$1,362,000	0.13	$178,900
Total		**$7,026,000**		**$5,473,000**

Notes

1) Discount rate of 7% was employed based on EPA's *A Guide to Developing and Documenting Cost Estimates During the Feasibility Study* (2000)

Table A14: Estimated Capital Costs for Alternative 5
Standard Mine Superfund Site Feasibility Study
Crested Butte, Colorado
October 16, 2009

Item	Units	Quantity	Unit Cost	Extended Cost	Unit Cost Reference No.	Notes
Direct Costs						
General Site Work						
Clear and grub site	ft^2	9,238	$ 0.17	$1,537.02	1	Total footprint of passive treatment system
Remove topsoil	yd^3	171	$ 2.12	$362.51	2	Footprint of BCR, settling basin, and mixing basin*topsoil thickness
Access road relocation	ls	1.0	$ 25,000.00	$25,000.00		Estimate
Survey lines and grades	acres	0.21	$ 4,712.50	$999.41	3	Total site footprint
Geotechnical report	ls	1.0	$ 18,000.00	$18,000.00	4	estimate
Silt fence	ft	192	$ 1.64	$314.87	5	2 square sides of total footprint - assume 2 sides need fencing
Install staked hay bales	ft	19	$ 10.53	$202.42	6	10 ft spacing along fence
Fence and hay bale removal	ls	1.0		$258.64		Estimate, half of installation costs
Seeding berms and disturbed area	yd^2	59	$ 0.43	$25.49	7	Clear and grub area - top area of PTS unit operations
			Subtotal	**$46,700.36**		
Biochemical Reactors						
Excavate BCR	yd^3	574	$ 22.43	$12,868.46	8	
Compact sub grade	yd^3	128	$ 0.72	$91.52	9	
Final grading for BCRs	ft^2	4,950	$ 0.49	$2,413.14	11	
Basin floor concrete volume	yd^3	122	$ 468.00	$57,200.16	12	
Basin wall concrete volume	yd^3	104	$ 520.00	$54,200.25	14	Quantity is increased to account for multiple BCRs
Stem wall concrete volume	yd^3	7	$ 468.00	$3,170.25	15	Quantity is increased to account for multiple BCRs
Concrete wall pumping costs	yd^3	8	$ 53.95	$430.07	16	Quantity is increased to account for multiple BCRs
Water stop, rib 3/8" x 6"	ft	400	$ 10.60	$4,238.01	17	Quantity is increased to account for multiple BCRs
Top wall float fin 1/16"	ft	800	$ 2.31	$1,851.20	18	Quantity is increased to account for multiple BCRs
Place fill for berms	yd^3	121	$ 24.77	$3,005.84	19	Berm volume from BCR design multiplied by the number of BCR cells
Compact berms	yd^3	121	$ 1.95	$236.68	20	
Install drainage gravel	yd^3	56	$ 79.39	$4,471.47	21	
Install perforated pipe	ft	928	$ 27.02	$25,069.91	22	
Install solid pipe	ft	297	$ 30.42	$9,022.31	20	
Reducing tee 4" by 4" by 2" -Sch. 80 PVC	each	70	$ 130.40	$9,180.16	24	
Tee 4" Sch. 80 PVC	each	6	$ 138.68	$832.08	22	
90° Elbow 4" Sch. 80 PVC	each	8	$ 94.83	$758.64	26	
45° Elbow Sch. 80 PVC	each	2	$ 162.74	$325.48	27	
Pipe cap 2" Sch. 40 PVC	each	35	$ 28.96	$1,019.39	28	
Pipe cap 4" Sch. 40 PVC	each	4	$ 68.41	$273.64	29	
Water level control structure	each	2	$ 840.00	$1,680.00	30	
Install substrate	yd^3	597	$ 48.87	$29,192.51	33	
Install woodchips	yd^3	406	$ 25.44	$10,335.96	34	
Install cover liner	ft^2	3125	$ 0.80	$2,499.81	35	
Install cover geotextile	ft^2	3125	$ 0.32	$999.40	36	Geotextile under liner
			Subtotal	**$ 235,366**		
Settling Basin						
Excavate	yd^3	274	$ 22.43	$6,153.42	8	
Compact sub grade	ft^2	1,764	$ 0.72	$1,261.26	9	
Final grading	ft^2	3,411	$ 0.49	$1,662.65	11	
Basin floor concrete volume	yd^3	47	$ 468.00	$22,147.84	13	
Basin wall concrete volume	yd^3	22	$ 520.00	$11,633.21	14	
Stem wall concrete volume	yd^3	3	$ 468.00	$1,585.13	15	
Concrete wall pumping costs	yd^3	1	$ 53.95	$51.47	16	
Water stop, rib 3/8" x 6"	ft	176	$ 10.60	$1,864.72	17	
Top wall float fin 1/16"	ft	176	$ 2.31	$407.26	18	
Place fill for berms	yd^3	13	$ 24.77	$324.09	19	
Compact berms	yd^3	0.48	$ 1.95	$0.95	20	
Water level control structure	each	3	$ 840.00	$2,520.00	30	
			Subtotal	**$ 49,611.98**		
Mixing Basin						
Excavate	yd^3	273	$ 22.43	$6,126.18	8	
Compact sub grade	ft^2	1,800	$ 0.72	$1,287.00	9	
Final grading	yd^3	11	$ 0.49	$5.30	11	
Basin floor concrete volume	yd^3	48	$ 468.00	$22,696.97	13	
Basin wall concrete volume	yd^3	24	$ 520.00	$12,426.38	14	
Stem wall concrete volume	yd^3	3	$ 468.00	$1,585.13	15	
Concrete wall pumping costs	yd^3	27	$ 53.95	$1,471.97	16	
Water stop, rib 3/8" x 6"	ft	188	$ 10.60	$1,991.86	17	
Top wall float fin 1/16"	ft	188	$ 2.31	$435.03	18	
Place fill for berms	yd^3	11	$ 24.77	$269.12	19	
Compact berms	yd^3	11	$ 1.95	$21.19	20	
Water level control structure	each	1	840	$840.00	30	
			Subtotal	**$ 49,156.13**		
Piping Between PTS Components						
Pipe from settling basin to BCR	ft	200	$ 30.42	$6,083.00	20	Quantity estimated
pipe from BCR to mixing basin	ft	100	$ 30.42	$3,041.50	20	Quantity estimated
pipe from settling basin to mixing basin	ft	400	$ 30.42	$12,166.00	20	Quantity estimated
pipe from mixing basin to aeration channel	ft	50	$ 30.42	$1,520.75	20	Quantity estimated
pipe from settling pond to creek	ft	200	$ 30.42	$6,083.00	20	Quantity estimated
Cleanouts	each	38	$ 843.40	$32,049.20	31	Estimate based on cleanouts in both directions spaced every 50 ft
Misc. pipe fittings	ls	1	$ 2,575.70	$2,575.70	24, 25	Estimate, 10 45° elbows, 10 90° elbows
Pipe trench excavation	yd^3	422	$ 4.84	$2,041.87	39	
Bedding installation	yd^3	211	$ 58.50	$12,350.00	9	
Trench backfill	ft	422	$ 1.26	$532.63	40	
			Subtotal	**$ 78,443.64**		

Table A14: Estimated Capital Costs for Alternative 5
Standard Mine Superfund Site Feasibility Study
Crested Butte, Colorado
October 16, 2009

Item	Units	Quantity	Unit Cost	Extended Cost	Unit Cost Reference No.	Notes
Aeration Channel						
Channel excavation	yd^3	225	$ 8.26	$1,854.17	32	Calculated based on channel dimensions, 1:3, H:V side slopes
Geotextile install	ft^2	14,974	$ 0.32	$4,789.14	36	Calculated based on channel dimensions, 1:3, H:V side slopes
Liner Install	ft^2	14,974	$ 0.80	$11,979.08	35	Same as geotextile install
Rip Rap fill	yd^3	225	$ 78.00	$17,519.69	38	
			Subtotal	**$ 36,142.08**		
Monitoring Equipment						
Flume with protective box	each	4	$ 2,853.75	$11,415.00	32	Influent, effluent, 2 on BCR influents, 1 on mixing pond MIW influent, 1 on mixing pond bypass
ISCO auto samplers	each	2	$ 2,979.77	$5,959.53	41	Influent and effluent
Flow bubbler modules	each	2	$ 1,966.50	$3,933.00	42	Influent and effluent
Solar power supply system	each	2	$ 7,912.00	$15,824.00	43	Pilot solar costs x 2 to account for increase in power demands
Small shed to house equipment	each	2	$ 5,000.00	$10,000.00		Estimate
			Subtotal	**$ 47,131.53**		
Direct Costs				**$ 542,552.07**		Sum of above subtotals
Indirect Costs						
Mobilization				$ 70,531.77		13% of direct costs
Scope contingency				$ 94,946.61		17.5% of direct costs[2,3]
Bid contingency				$ 189,893.22		20% of direct costs[2,3]
Total Construction Costs[4]				**$ 897,923.67**		
Engineering design				$ 134,688.55		15% of construction costs
Project management				$ 71,833.89		8% of total construction cost[2]
Construction management				$ 89,792.37		10% of total Construction Costs[2]
Estimate of Total Capital Cost				**$ 1,195,000.00**		

Notes:

1) No calculations were rounded until the final total to aid computation accuracy

2) Cost is based on the EPA CERCLA Cost Estimating Guidance document percentages (Table 5-8) for a project in the $100K to $500K capital cost range.

3) Scope contingency is estimated in the middle of the EPA CERCLA acceptable range because of two years of pilot system operation. Bid Contingency is estimated on the high end of the acceptable range because of the uniqueness of the project, which may be viewed by contractors as somewhat risky when compared to "typical" construction projects.

4) Total construction costs include direct costs, mobilization, scope contingency and bid contingency

Table A15: Estimated Operations and Maintenance Costs for Alternative 5
Standard Mine Superfund Site Feasibility Study
Crested Butte, Colorado
October 16, 2009

Item	Units	Quantity	Unit Cost	Extended Cost	Notes
Annual Operation and Maintenance Costs					
Sampling and Site Inspection					
Quarterly monitoring event	ls	1	$ 10,000	$ 10,000	Estimate
Annual report preparation	ls	1	$ 5,000	$ 5,000	Estimate
General site maintenance	ls	1	$ 10,000	$ 10,000	Estimate
			Total Annual costs	**$ 25,000**	
5-Year Operation & Maintenance Costs					
Sludge Removal and Disposal					
Pump out Sludge using sump Pump	yd^3	260		$ -	
Dispose of dewatered sludge	yd^3	130	$ 29.68	$ 200.00	Assumed 50% volume reduction of sludge to solids
Geotube purchase	each	2	$ 2,170.00	$ 4,340.00	Vendor quote, project experience
Roll-off dumpster rental	each	2	$ 500.00	$ 1,000.00	estimate
Sludge pump rental	ls	1	$ 500.00	$ 500.00	estimate
Field work for dewatering mixing pond	ls	1	$ 10,000.00	$ 10,000.00	estimate
Sludge disposal costs	yd^3	130	$ 29.68	$ 3,864.75	Unit cost reference # 42
			Subtotal	$ 19,904.75	
Mobilization				$ 2,587.62	13% of direct costs[2,3]
Scope Contingency				$ 3,980.95	20% ofdirect costs[2,3]
Bid Contingency				$ 7,961.90	20% of direct costs[2,3]
			Subtotal	$ 34,435.22	
Engineering Support - Permitting, substrate disposal support, etc				$ 5,165.28	15% of Subtotal
Project management				$ 2,754.82	8% of subtotal[3]
Construction Management				$ 3,443.52	10% of subtotal[3]
			Total Sludge Disposal Costs	$ 45,798.84	
5-year Monitoring Event and Report	ls	1	$ 20,000	$ 20,000	Estimate
			Total 5-year costs	**$ 90,798.84**	includes annual and 5-year costs
15-Year O& M Costs					
BCR Media Replacement					
Excavate BCR woodchip cover	yd^3	406	$ 22.43	$ 9,109.57	Excavation costs for BCR cell
Excavate spent BCR media	yd^3	597	$ 22.43	$ 13,395.22	Excavation costs for BCR cell
New media install	yd^3	597	$ 48.87	$ 29,192.51	Substrate placement costs
Install woodchip cover	yd^3	406	$ 2.44	$ 991.19	Unit cost for placing fill. Assume woodchips will be reused
Install cover liner	ft^2	2,752	$ 0.17	$ 981.05	Labor costs to replace liner, plus $500 for material repairs
Dispose of spent BCR media	yd^3	597	$ 29.68	$ 17,728.88	Unit cost reference # 42
			Subtotal	$ 71,398.41	
Mobilization				$ 9,281.79	13% of direct costs[2,3]
Scope Contingency				$ 14,279.68	20% of direct costs[2,3]
Bid Contingency				$ 28,559.36	20% of direct costs[2,3]
			Subtotal	$ 123,519.25	
Engineering Support - Permitting, substrate disposal support, etc				$ 18,527.89	15% of Subtotal
Project management				$ 9,881.54	8% of subtotal[3]
Construction Management				$ 12,351.93	10% of subtotal[3]
			Total BCR Replacement Costs	$ 164,280.60	
Total 15-Year Costs				**$ 256,000**	includes annual, 5-year costs, and 15-year costs

Notes:
1) Most unit rates were developed from RS Means Heavy Construction Cost Data, 2009 Edition, adjusted for site conditions.
2) Cost is based on the EPA CERCLA Cost Estimating Guidance document percentages (Table 5-8) for a project in the $100K to $500K capital cost range.
3) Scope contingency is estimated in the middle of the EPA CERCLA acceptable range because of two years of pilot system operation. Bid Contingency is estimated on the high end of the acceptable range because of the uniqueness of the project, which may be viewed by contractors as somewhat risky when compared to "typical" construction

Table A16: Alternative 5 Cost Estimate Schedule and Net Present Value Assessment
Standard Mine Superfund Site Feasibility Study
Crested Butte, Colorado

Year	Cost item Summary	Estimated Cost	Discount Factor[1]	NPV
0	System Construction	$1,195,000	1.00	$1,195,000
1	Annual Maintenance	$25,000	0.93	$23,400
2	Annual Maintenance	$25,000	0.87	$21,800
3	Annual Maintenance	$25,000	0.82	$20,400
4	Annual Maintenance	$25,000	0.76	$19,100
5	5-year maintenance, solids/sludge removal	$90,799	0.71	$64,700
6	Annual Maintenance	$25,000	0.67	$16,700
7	Annual Maintenance	$25,000	0.62	$15,600
8	Annual Maintenance	$25,000	0.58	$14,600
9	Annual Maintenance	$25,000	0.54	$13,600
10	5-year maintenance, solids/sludge removal	$90,799	0.51	$46,200
11	Annual Maintenance	$25,000	0.48	$11,900
12	Annual Maintenance	$25,000	0.44	$11,100
13	Annual Maintenance	$25,000	0.41	$10,400
14	Annual Maintenance	$25,000	0.39	$9,700
15	15-year maintenance (BCR media replacement), 5-year maintenance, and annual maintenance	$256,000	0.36	$92,800
16	Annual Maintenance	$25,000	0.34	$8,500
17	Annual Maintenance	$25,000	0.32	$7,900
18	Annual Maintenance	$25,000	0.30	$7,400
19	Annual Maintenance	$25,000	0.28	$6,900
20	5-year maintenance, solids/sludge removal	$90,799	0.26	$23,500
21	Annual Maintenance	$25,000	0.24	$6,000
22	Annual Maintenance	$25,000	0.23	$5,600
23	Annual Maintenance	$25,000	0.21	$5,300
24	Annual Maintenance	$25,000	0.20	$4,900
25	5-year maintenance, solids/sludge removal	$90,799	0.18	$16,700
26	Annual Maintenance	$25,000	0.17	$4,300
27	Annual Maintenance	$25,000	0.16	$4,000
28	Annual Maintenance	$25,000	0.15	$3,800
29	Annual Maintenance	$25,000	0.14	$3,500
30	15-year maintenance (BCR media replacement), 5-year maintenance, and annual maintenance	$256,000	0.13	$33,600
Total		**$2,415,000**		**$1,696,000**

Notes

1) Discount rate of 7% was employed based on EPA's *A Guide to Developing and Documenting Cost Estimates During the Feasibility Study* (2000)

APPENDIX B:
DESIGN CALCULATIONS

Table B1: Settling Basin Design Calculations - Alternative 1
Standard Mine Superfund Site Feasibility Study
Crested Butte, Colorado
October 16, 2009

Settling Basin Design		
Hydraulic retention time	hours	24
total flow	gpm	20
Minimum hydraulic volume	gallons	28,800
	ft^3	3,850
	yd^3	143
Sludge production rate	ml sludge/L H_2O	0.5
Sludge removal frequency	times/yr	0.2
Sludge storage volume	gallons	26,298
	ft^3	3,516
	yd^3	130
Basin Geometry		
Length to width ratio	L:W	1.00
Total cell height	ft	5.2
Freeboard height	ft	1.00
Sludge storage thickness	ft	2.00
Settling volume thickness	ft	2.2
Excavation depth	ft	4.20
Backfill height	ft	1.00
Freeboard Volume Calculations		
Basin width	ft	42.0
Basin length	ft	42.0
Surface area	ft^2	1,764
Freeboard volume	ft^3	1,764
	yd^3	65
Sludge Storage Layer Volume Calculations		
Basin width	ft	42
Basin length	ft	42
Surface area	ft^2	1,764
Sludge storage volume	ft^3	3,528
	yd^3	131

Volume and Footprint Calculations		
Concrete wall and backfill top width	ft	1
Basin top width, including concrete wall and berm	ft	44
Basin top Length including concrete wall and berm	ft	44
Basin top area, including concrete wall and berm	ft^2	1,936
Volume of backfill and basin above ground	ft^3	2,117
Volume of basin above ground	ft^3	1,764
Volume of backfill	ft^3	353
Excavation volume	ft^3	7,409
Settling Layer Volume Calculations		
Settling volume width	ft	42
Settling volume length	ft	42
Settling volume surface area	ft^2	1,764
Settling Volume	ft^3	3,881
	yd^3	144
Hydraulic Retention Time	hours	24
	days	1
Concrete Volumes		
Basin floor concrete length	ft	44
Basin floor concrete width	ft	44
Basin floor concrete thickness	ft	0.7
Basin floor concrete volume	ft^3	1278
	yd^3	47
Basin wall concrete length	ft	176
Basin wall concrete width	ft	0.7
Basin wall concrete height	ft	5.2
Basin wall concrete volume	ft^3	604
	yd^3	22
Basin stem wall length	ft	4.0
Basin stem wall width	ft	0.7
Basin stem wall height	ft	4.3
# of stem walls	#	8.0
Stem wall concrete volume	ft^3	91
	yd^3	3

Table B2: BCR Design Calculations for One BCR Cell - Alternative 1
Standard Mine Superfund Site Feasibility Study
Crested Butte, Colorado
October 16, 2009

Cell Geometry		
Length to Width	L:W	1.00
Side Slopes	H:V	0.00
Freeboard Height	ft	1.00
Standing Water Depth	ft	0.50
Substrate Thickness	ft	3.50
Gravel Thickness	ft	0.33
Gravel Layer Volume Calculations		
Gravel Top Width	ft	48.0
Gravel top Length	ft	48.0
Gravel Top Area	ft^2	2,304
Gravel Bottom Width	ft	48.0
Gravel Bottom Length	ft	48.0
Gravel Bottom Area	ft^2	2,304
Gravel Volume	ft^3	760
	yd^3	28
Hydraulic Retention Time	hours	8
	days	0.3
Substrate Layer Volume Calculations		
Substrate Bottom Area	ft^2	2,304
Substrate Bottom width	ft	48.0
Substrate Bottom length	ft	48.0
Substrate Top Length	ft	48.0
Substrate Top Width	ft	48.0
Substrate Top Area	ft^2	2,304
Substrate Volume	ft^3	8,064
	yd^3	299
	m^3	228
Hydraulic Retention Time	hours	84
	days	3.49
Standing Water Layer Volume Calculations		
Water Bottom Width	ft	48.0
Water Bottom length	ft	48.0
Water bottom Area	ft^2	2,304
Water Top Width	ft	48.0
Water Top length	ft	48.0
Water Top Area	ft^2	2,304
Volume of Standing Water Space (Volume of cover fill in water space)	ft^3	1,152
	yd^3	43
Volume of water present	ft^3	576
Hydraulic Retention Time	hours	12
	days	0.5
Freeboard Layer Volume Calculations		
Bottom Width	ft	48.0
Bottom length	ft	48.0
Bottom Area	ft^2	2,304
Top Width	ft	48.0
Top length	ft	48.0
Top Area	ft^2	2,304
Freeboard Volume	ft^3	2,304
	yd^3	85
Total Cell Volume	ft^3	12,280
	yd^3	455
Total Hydraulic Retention Time	days	4.3

Berm Volume and Total Footprint		
Concrete wall and backfill top width	ft	1.00
Excavation Depth	ft	3.36
total Cell height	ft	5.33
Backfill height	ft	1.97
BCR top width, including concrete walls	ft	50.0
BCR top length including concrete walls	ft	50.00
Volume of Cell above ground	ft^3	4,533
Volume of backfill on outside of concrete	ft^3	1,639
Excavation volume	ft^3	7,747
Concrete Quantities		
Basin floor concrete length	ft	50
Basin floor concrete width	ft	50
Basin floor concrete thickness	ft	0.7
Basin Floor concrete Volume	yd^3	61
Basin wall concrete length	ft	200
Basin wall concrete width	ft	0.7
Basin wall concrete height	ft	5.3
Basin wall concrete volume	yd^3	52
Basin stem wall length	ft	4.0
Basin stem wall width	ft	0.7
Basin stem wall height	ft	4.3
# of stem walls	#	8.0
Stem wall volume	yd^3	3
Porosities		
Substrate porosity	%	50%
Gravel porosity	%	50%
Cover Material porosity	%	50%
Substrate Recipe		
woodchips	% by wt	49%
limestone	% by wt	40%
hay	% by wt	10%
manure	% by wt	1%
total	% by wt	100%
Substrate Quantities For One BCR Cell		
woodchips	lbs	73,834
limestone	lbs	60,273
hay	lbs	15,068
manure	lbs	1,507
total	lbs	227,530
Cover Material Quantities for One BCR Cell		
Volume of Cover Material	ft^3	5,484
	yd^3	203
Area of Liner Required	ft^2	1,562
Pipe Quantities for One BCR Cell		
perforated Pipe length	ft	464
Solid pipe length	ft	148
Reducing 4"X4"X2" T fittings	#	35
4" T Fittings	#	3
90° Elbow	#	1
45° Elbow	#	4
2" SCH 80 pipe Caps	#	35
4" SCH 80 Pipe Caps	#	4
Agridrain In Line Water Level Control	#	1

Table B3: Mixing Basin Design Calculations - Alternative 1
Standard Mine Superfund Site Feasibility Study
Crested Butte, Colorado
October 16, 2009

Cell Design		
BCR flow rate	gpm	12
Volume based mixing ratio	BCR:MIW	1.5
MIW flow rate	gpm	8
Total flow rate	gpm	20
Hydraulic retention time	hours	24
Minimum hydraulic volume	gallons	28,800
	ft^3	3,850
	CY	143
Sludge production rate	ml sludge/L H_2O	0.5
Sludge removal frequency	times/yr	0.2
Sludge storage volume	gallons	26,298
	ft^3	3,516
	yd^3	130
Total cell volume	yd^3	347
Basin Geometry		
Length to width	L:W	2.00
Total cell height	ft	5.2
Freeboard height	ft	1.00
Sludge storage thickness	ft	2.00
Settling volume thickness	ft	2.2
Concrete wall width	ft	1.0
Excavation depth	ft	4.2
Total cell height	ft	5.2
Backfill height	ft	1.0
Freeboard Volume Calculations		
Bottom width	ft	30.0
Bottom length	ft	60.0
Surface area	ft^2	1,800
Freeboard volume	ft^3	1,800
	yd^3	67
Sludge Layer Volume Calculations		
Sludge layer width	ft	30
Sludge layer length	ft	60
Surface area	ft^2	1,800
Sludge storage volume	ft^3	3,600
	yd^3	133

Settling Layer Volume Calculations		
Settling volume width	ft	30
Settling volume length	ft	60
Settling volume surface area	ft^2	1,800
Settling volume	ft^3	3,960
	yd^3	147
Hydraulic retention time	hours	25
	days	1.0
Volume and Footprint Calculations		
Basin top width with concrete walls and berm	ft	32
Basin top length with concrete walls and backfill	ft	62
Basin surface area, with walls and berms	ft^2	1,984
Volume of backfill and cell above ground	ft^3	2,277
Volume of cell above ground	ft^3	1,984
Volume of backfill	ft^3	293
Excavation volume	ft^3	7,376
Concrete Volumes		
Basin floor concrete length	ft	62
Basin floor concrete width	ft	32
Basin floor concrete thickness	ft	0.7
Basin floor concrete volume	ft^3	1,309
	yd^3	48
Basin wall concrete length	ft	188
Basin wall concrete width	ft	0.7
Basin wall concrete height	ft	5
Basin wall concrete volume	ft^3	645
	yd^3	24
Basin stem wall length	ft	4.0
Basin stem wall width	ft	0.7
Basin stem wall height	ft	4.3
# of stem walls	#	8.0
Stem wall concrete volume	ft^3	91
	yd^3	3

Table B4: Settling Basin Design Calculations - Alternative 2
Standard Mine Superfund Site Feasibility Study
Crested Butte, Colorado
October 16, 2009

Settling Basin Design		
Hydraulic retention time	hours	24
total flow	gpm	50
Minimum hydraulic volume	gallons	72,000
	ft^3	9,626
	yd^3	357
Sludge production rate	ml sludge/L H_2O	0.5
Sludge removal frequency	times/yr	0.2
Sludge storage volume	gallons	65,745
	ft^3	8,789
	yd^3	326
Basin Geometry		
Length to width ratio	L:W	1.00
Total cell height	ft	6.0
Freeboard height	ft	1.00
Sludge storage thickness	ft	2.50
Settling volume thickness	ft	2.5
Excavation depth	ft	4.20
Backfill height	ft	1.80
Freeboard Volume Calculations		
Basin width	ft	62.0
Basin length	ft	62.0
Surface area	ft^2	3,844
Freeboard volume	ft^3	3,844
	yd^3	142
Sludge Storage Layer Volume Calculations		
Basin width	ft	62
Basin length	ft	62
Surface area	ft^2	3,844
Sludge storage volume	ft^3	9,610
	yd^3	356

Volume and Footprint Calculations		
Concrete wall and backfill top width	ft	1
Basin top width, including concrete wall and berm	ft	64
Basin top Length including concrete wall and berm	ft	64
Basin top area, including concrete wall and berm	ft^2	4,096
Volume of backfill and basin above ground	ft^3	8,130
Volume of basin above ground	ft^3	6,919
Volume of backfill	ft^3	1,210
Excavation volume	ft^3	16,145
Settling Layer Volume Calculations		
Settling volume width	ft	62
Settling volume length	ft	62
Settling volume surface area	ft^2	3,844
Settling Volume	ft^3	9,610
	yd^3	356
Hydraulic Retention Time	hours	24
	days	1
Concrete Volumes		
Basin floor concrete length	ft	64
Basin floor concrete width	ft	64
Basin floor concrete thickness	ft	0.7
Basin floor concrete volume	ft^3	2703
	yd^3	100
Basin wall concrete length	ft	256
Basin wall concrete width	ft	0.7
Basin wall concrete height	ft	6.0
Basin wall concrete volume	ft^3	1014
	yd^3	38
Basin stem wall length	ft	4.0
Basin stem wall width	ft	0.7
Basin stem wall height	ft	4.3
# of stem walls	#	8.0
Stem wall concrete volume	ft^3	91
	yd^3	3

Table B5: BCR Design Calculations for One BCR Cell - Alternative 2
Standard Mine Superfund Site Feasibility Study
Crested Butte, Colorado
October 16, 2009

Cell Geometry		
Length to Width	L:W	1.00
Side Slopes	H:V	0.00
Freeboard Height	ft	1.00
Standing Water Depth	ft	0.50
Substrate Thickness	ft	3.50
Gravel Thickness	ft	0.33
Gravel Layer Volume Calculations		
Gravel Top Width	ft	75.9
Gravel top Length	ft	75.9
Gravel Top Area	ft^2	5,760
Gravel Bottom Width	ft	75.9
Gravel Bottom Length	ft	75.9
Gravel Bottom Area	ft^2	5,760
Gravel Volume	ft^3	1,901
	yd^3	70
Hydraulic Retention Time	hours	8
	days	0.3
Substrate Layer Volume Calculations		
Substrate Bottom Area	ft^2	5,760
Substrate Bottom width	ft	75.9
Substrate Bottom length	ft	75.9
Substrate Top Length	ft	75.9
Substrate Top Width	ft	75.9
Substrate Top Area	ft^2	5,760
Substrate Volume	ft^3	20,160
	yd^3	747
	m^3	571
Hydraulic Retention Time	hours	84
	days	3.49
Standing Water Layer Volume Calculations		
Water Bottom Width	ft	75.9
Water Bottom length	ft	75.9
Water bottom Area	ft^2	5,760
Water Top Width	ft	75.9
Water Top length	ft	75.9
Water Top Area	ft^2	5,760
Volume of Standing Water Space (Volume of cover fill in water space)	ft^3	2,880
	yd^3	107
Volume of water present	ft^3	1,440
Hydraulic Retention Time	hours	12
	days	0.5
Freeboard Layer Volume Calculations		
Bottom Width	ft	75.9
Bottom length	ft	75.9
Bottom Area	ft^2	5,760
Top Width	ft	75.9
Top length	ft	75.9
Top Area	ft^2	5,760
Freeboard Volume	ft^3	5,760
	yd^3	213
Total Cell Volume	ft^3	30,701
	yd^3	1,137
Total Hydraulic Retention Time	days	4.3

Berm Volume and Total Footprint		
Concrete wall and backfill top width	ft	1.00
Excavation Depth	ft	3.36
total Cell height	ft	5.33
Backfill height	ft	1.97
BCR top width, including concrete walls	ft	77.9
BCR top length including concrete walls	ft	77.89
Volume of Cell above ground	ft^3	11,334
Volume of backfill on outside of concrete	ft^3	2,506
Excavation volume	ft^3	19,367
Concrete Quantities		
Basin floor concrete length	ft	78
Basin floor concrete width	ft	78
Basin floor concrete thickness	ft	0.7
Basin Floor concrete Volume	yd^3	148
Basin wall concrete length	ft	312
Basin wall concrete width	ft	0.7
Basin wall concrete height	ft	5.3
Basin wall concrete volume	yd^3	81
Basin stem wall length	ft	4.0
Basin stem wall width	ft	0.7
Basin stem wall height	ft	4.3
# of stem walls	#	8.0
Stem wall volume	yd^3	3
Porosities		
Substrate porosity	%	50%
Gravel porosity	%	50%
Cover Material porosity	%	50%
Substrate Recipe		
woodchips	% by wt	49%
limestone	% by wt	40%
hay	% by wt	10%
manure	% by wt	1%
total	% by wt	100%
Substrate Quantities For One BCR Cell		
woodchips	lbs	184,586
limestone	lbs	150,682
hay	lbs	37,671
manure	lbs	3,767
total	lbs	568,826
Cover Material Quantities for One BCR Cell		
Volume of Cover Material	ft^3	13,957
	yd^3	517
Area of Liner Required	ft^2	3,511
Pipe Quantities for One BCR Cell		
perforated Pipe length	ft	910
Solid pipe length	ft	218
Reducing 4"X4"X2" T fittings	#	58
4" T Fittings	#	3
90° Elbow	#	1
45° Elbow	#	4
2" SCH 80 pipe Caps	#	58
4" SCH 80 Pipe Caps	#	4
Agridrain In Line Water Level Control	#	1

Table B6: Mixing Basin Design Calculations - Alternative 2
Standard Mine Superfund Site Feasibility Study
Crested Butte, Colorado
October 16, 2009

Cell Design		
BCR flow rate	gpm	30
Volume based mixing ratio	BCR:MIW	1.5
MIW flow rate	gpm	20
Total flow rate	gpm	50
Hydraulic retention time	hours	24
Minimum hydraulic volume	gallons	72,000
	ft^3	9,626
	CY	357
Sludge production rate	ml sludge/L H_2O	0.5
Sludge removal frequency	times/yr	0.2
Sludge storage volume	gallons	65,745
	ft^3	8,789
	yd^3	326
Total cell volume	yd^3	763
Basin Geometry		
Length to width	L:W	2.00
Total cell height	ft	5.2
Freeboard height	ft	1.00
Sludge storage thickness	ft	2.00
Settling volume thickness	ft	2.2
Concrete wall width	ft	1.0
Excavation depth	ft	4.2
Total cell height	ft	5.2
Backfill height	ft	1.0
Freeboard Volume Calculations		
Bottom width	ft	44.5
Bottom length	ft	89.0
Surface area	ft^2	3,961
Freeboard volume	ft^3	3,961
	yd^3	147
Sludge Layer Volume Calculations		
Sludge layer width	ft	45
Sludge layer length	ft	89
Surface area	ft^2	3,961
Sludge storage volume	ft^3	7,921
	yd^3	293

Settling Layer Volume Calculations		
Settling volume width	ft	45
Settling volume length	ft	89
Settling volume surface area	ft^2	3,961
Settling volume	ft^3	8,713
	yd^3	323
Hydraulic retention time	hours	22
	days	0.9
Volume and Footprint Calculations		
Basin top width with concrete walls and berm	ft	47
Basin top length with concrete walls and backfill	ft	91
Basin surface area, with walls and berms	ft^2	4,232
Volume of backfill and cell above ground	ft^3	4,655
Volume of cell above ground	ft^3	4,232
Volume of backfill	ft^3	424
Excavation volume	ft^3	16,363
Concrete Volumes		
Basin floor concrete length	ft	91
Basin floor concrete width	ft	47
Basin floor concrete thickness	ft	0.7
Basin floor concrete volume	ft^3	2,793
	yd^3	103
Basin wall concrete length	ft	275
Basin wall concrete width	ft	0.7
Basin wall concrete height	ft	5
Basin wall concrete volume	ft^3	944
	yd^3	35
Basin stem wall length	ft	4.0
Basin stem wall width	ft	0.7
Basin stem wall height	ft	4.3
# of stem walls	#	8.0
Stem wall concrete volume	ft^3	91
	yd^3	3

Golder Associates

Table B7: Settling Basin Design Calculations - Alternative 3
Standard Mine Superfund Site Feasibility Study
Crested Butte, Colorado
October 16, 2009

Settling Basin Design		
Hydraulic retention time	hours	24
total flow	gpm	160
Minimum hydraulic volume	gallons	230,400
	ft^3	30,802
	yd^3	1,141
Sludge production rate	ml sludge/L H_2O	0.5
Sludge removal frequency	times/yr	0.2
Sludge storage volume	gallons	210,384
	ft^3	28,126
	yd^3	1,042
Basin Geometry		
Length to width ratio	L:W	1.00
Total cell height	ft	6.0
Freeboard height	ft	1.00
Sludge storage thickness	ft	2.50
Settling volume thickness	ft	2.5
Excavation depth	ft	4.20
Backfill height	ft	1.80
Freeboard Volume Calculations		
Basin width	ft	105.0
Basin length	ft	105.0
Surface area	ft^2	11,025
Freeboard volume	ft^3	11,025
	yd^3	408
Sludge Storage Layer Volume Calculations		
Basin width	ft	105
Basin length	ft	105
Surface area	ft^2	11,025
Sludge storage volume	ft^3	27,563
	yd^3	1,021

Volume and Footprint Calculations		
Concrete wall and backfill top width	ft	1
Basin top width, including concrete wall and berm	ft	107
Basin top Length including concrete wall and berm	ft	107
Basin top area, including concrete wall and berm	ft^2	11,449
Volume of backfill and basin above ground	ft^3	21,860
Volume of basin above ground	ft^3	19,845
Volume of backfill	ft^3	2,015
Excavation volume	ft^3	46,305
Settling Layer Volume Calculations		
Settling volume width	ft	105
Settling volume length	ft	105
Settling volume surface area	ft^2	11,025
Settling Volume	ft^3	27,563
	yd^3	1,021
Hydraulic Retention Time	hours	21
	days	1
Concrete Volumes		
Basin floor concrete length	ft	107
Basin floor concrete width	ft	107
Basin floor concrete thickness	ft	0.7
Basin floor concrete volume	ft^3	7556
	yd^3	280
Basin wall concrete length	ft	428
Basin wall concrete width	ft	0.7
Basin wall concrete height	ft	6.0
Basin wall concrete volume	ft^3	1695
	yd^3	63
Basin stem wall length	ft	4.0
Basin stem wall width	ft	0.7
Basin stem wall height	ft	4.3
# of stem walls	#	8.0
Stem wall concrete volume	ft^3	91
	yd^3	3

Table B8: BCR Design Calculations for One BCR Cell - Alternative 3
Standard Mine Superfund Site Feasibility Study
Crested Butte, Colorado
October 16, 2009

Cell Geometry		
Length to Width	L:W	1.00
Side Slopes	H:V	0.00
Freeboard Height	ft	1.00
Standing Water Depth	ft	0.50
Substrate Thickness	ft	3.50
Gravel Thickness	ft	0.33
Gravel Layer Volume Calculations		
Gravel Top Width	ft	110.9
Gravel top Length	ft	110.9
Gravel Top Area	ft^2	12,288
Gravel Bottom Width	ft	110.9
Gravel Bottom Length	ft	110.9
Gravel Bottom Area	ft^2	12,288
Gravel Volume	ft^3	4,055
	yd^3	150
Hydraulic Retention Time	hours	8
	days	0.3
Substrate Layer Volume Calculations		
Substrate Bottom Area	ft^2	12,288
Substrate Bottom width	ft	110.9
Substrate Bottom length	ft	110.9
Substrate Top Length	ft	110.9
Substrate Top Width	ft	110.9
Substrate Top Area	ft^2	12,288
Substrate Volume	ft^3	43,008
	yd^3	1593
	m^3	1218
Hydraulic Retention Time	hours	84
	days	3.49
Standing Water Layer Volume Calculations		
Water Bottom Width	ft	110.9
Water Bottom length	ft	110.9
Water bottom Area	ft^2	12,288
Water Top Width	ft	110.9
Water Top length	ft	110.9
Water Top Area	ft^2	12,288
Volume of Standing Water Space (Volume of cover fill in water space)	ft^3	6,144
	yd^3	228
Volume of water present	ft^3	3,072
Hydraulic Retention Time	hours	12
	days	0.5
Freeboard Layer Volume Calculations		
Bottom Width	ft	110.9
Bottom length	ft	110.9
Bottom Area	ft^2	12,288
Top Width	ft	110.9
Top length	ft	110.9
Top Area	ft^2	12,288
Freeboard Volume	ft^3	12,288
	yd^3	455
Total Cell Volume	ft^3	65,495
	yd^3	2,426
Total Hydraulic Retention Time	days	4.3

Berm Volume and Total Footprint		
Concrete wall and backfill top width	ft	1.00
Excavation Depth	ft	3.36
total Cell height	ft	5.33
Backfill height	ft	1.97
BCR top width, including concrete walls	ft	112.9
BCR top length including concrete walls	ft	112.85
Volume of Cell above ground	ft^3	24,178
Volume of backfill on outside of concrete	ft^3	3,593
Excavation volume	ft^3	41,317
Concrete Quantities		
Basin floor concrete length	ft	113
Basin floor concrete width	ft	113
Basin floor concrete thickness	ft	0.7
Basin Floor concrete Volume	yd^3	311
Basin wall concrete length	ft	451
Basin wall concrete width	ft	0.7
Basin wall concrete height	ft	5.3
Basin wall concrete volume	yd^3	176
Basin stem wall length	ft	4.0
Basin stem wall width	ft	0.7
Basin stem wall height	ft	4.3
# of stem walls	#	8.0
Stem wall volume	yd^3	3
Porosities		
Substrate porosity	%	50%
Gravel porosity	%	50%
Cover Material porosity	%	50%
Substrate Recipe		
woodchips	% by wt	49%
limestone	% by wt	40%
hay	% by wt	10%
manure	% by wt	1%
total	% by wt	100%
Substrate Quantities For One BCR Cell		
woodchips	lbs	393,783
limestone	lbs	321,456
hay	lbs	80,364
manure	lbs	8,036
total	lbs	1,213,495
Cover Material Quantities for One BCR Cell		
Volume of Cover Material	ft^3	30,067
	yd^3	1,114
Area of Liner Required	ft^2	4,701
Pipe Quantities for One BCR Cell		
perforated Pipe length	ft	1470
Solid pipe length	ft	305
Reducing 4"X4"X2" T fittings	#	85
4" T Fittings	#	3
90° Elbow	#	1
45° Elbow	#	4
2" SCH 80 pipe Caps	#	85
4" SCH 80 Pipe Caps	#	4
Agridrain In Line Water Level Control	#	1

Table B9: Mixing Basin Design Calculations - Alternative 3
Standard Mine Superfund Site Feasibility Study
Crested Butte, Colorado
October 16, 2009

Cell Design		
BCR flow rate	gpm	96
Volume based mixing ratio	BCR:MIW	1.5
MIW flow rate	gpm	64
Total flow rate	gpm	160
Hydraulic retention time	hours	24
Minimum hydraulic volume	gallons	230,400
	ft^3	30,802
	CY	1,141
Sludge production rate	ml sludge/L H_2O	0.5
Sludge removal frequency	times/yr	0.2
Sludge storage volume	gallons	210,384
	ft^3	28,126
	yd^3	1,042
Total cell volume	yd^3	2200
Basin Geometry		
Length to width	L:W	2.00
Total cell height	ft	5.2
Freeboard height	ft	1.00
Sludge storage thickness	ft	2.00
Settling volume thickness	ft	2.2
Concrete wall width	ft	1.0
Excavation depth	ft	4.2
Total cell height	ft	5.2
Backfill height	ft	1.0
Freeboard Volume Calculations		
Bottom width	ft	75.6
Bottom length	ft	151.2
Surface area	ft^2	11,424
Freeboard volume	ft^3	11,424
	yd^3	423
Sludge Layer Volume Calculations		
Sludge layer width	ft	76
Sludge layer length	ft	151
Surface area	ft^2	11,424
Sludge storage volume	ft^3	22,847
	yd^3	846

Settling Layer Volume Calculations		
Settling volume width	ft	76
Settling volume length	ft	151
Settling volume surface area	ft^2	11,424
Settling volume	ft^3	25,132
	yd^3	931
Hydraulic retention time	hours	20
	days	0.8
Volume and Footprint Calculations		
Basin top width with concrete walls and berm	ft	78
Basin top length with concrete walls and backfill	ft	153
Basin surface area, with walls and berms	ft^2	11,881
Volume of backfill and cell above ground	ft^3	12,585
Volume of cell above ground	ft^3	11,881
Volume of backfill	ft^3	704
Excavation volume	ft^3	47,521
Concrete Volumes		
Basin floor concrete length	ft	153
Basin floor concrete width	ft	78
Basin floor concrete thickness	ft	0.7
Basin floor concrete volume	ft^3	7,841
	yd^3	290
Basin wall concrete length	ft	461
Basin wall concrete width	ft	0.7
Basin wall concrete height	ft	5
Basin wall concrete volume	ft^3	1584
	yd^3	59
Basin stem wall length	ft	4.0
Basin stem wall width	ft	0.7
Basin stem wall height	ft	4.3
# of stem walls	#	8.0
Stem wall concrete volume	ft^3	91
	yd^3	3

Table B10: Settling Basin Design Calculations - Alternative 4
Standard Mine Superfund Site Feasibility Study
Crested Butte, Colorado
October 16, 2009

Settling Basin Design		
Hydraulic retention time	hours	24
total flow	gpm	125
Minimum hydraulic volume	gallons	180,000
	ft^3	24,064
	yd^3	891
Sludge production rate	ml sludge/L H_2O	0.5
Sludge removal frequency	times/yr	0.2
Sludge storage volume	gallons	164,363
	ft^3	21,974
	yd^3	814
Basin Geometry		
Length to width ratio	L:W	1.00
Total cell height	ft	5.2
Freeboard height	ft	1.00
Sludge storage thickness	ft	2.00
Settling volume thickness	ft	2.2
Excavation depth	ft	4.20
Backfill height	ft	1.00
Freeboard Volume Calculations		
Basin width	ft	97.0
Basin length	ft	97.0
Surface area	ft^2	9,409
Freeboard volume	ft^3	9,409
	yd^3	348
Sludge Storage Layer Volume Calculations		
Basin width	ft	97
Basin length	ft	97
Surface area	ft^2	9,409
Sludge storage volume	ft^3	18,818
	yd^3	697

Volume and Footprint Calculations		
Concrete wall and backfill top width	ft	1
Basin top width, including concrete wall and berm	ft	99
Basin top Length including concrete wall and berm	ft	99
Basin top area, including concrete wall and berm	ft^2	9,801
Volume of backfill and basin above ground	ft^3	10,202
Volume of basin above ground	ft^3	9,409
Volume of backfill	ft^3	793
Excavation volume	ft^3	39,518
Settling Layer Volume Calculations		
Settling volume width	ft	97
Settling volume length	ft	97
Settling volume surface area	ft^2	9,409
Settling Volume	ft^3	20,700
	yd^3	767
Hydraulic Retention Time	hours	21
	days	1
Concrete Volumes		
Basin floor concrete length	ft	99
Basin floor concrete width	ft	99
Basin floor concrete thickness	ft	0.7
Basin floor concrete volume	ft^3	6469
	yd^3	240
Basin wall concrete length	ft	396
Basin wall concrete width	ft	0.7
Basin wall concrete height	ft	5.2
Basin wall concrete volume	ft^3	1359
	yd^3	50
Basin stem wall length	ft	4.0
Basin stem wall width	ft	0.7
Basin stem wall height	ft	4.3
# of stem walls	#	8.0
Stem wall concrete volume	ft^3	91
	yd^3	3

Table B11: BCR Design Calculations for One BCR Cell - Alternative 4
Standard Mine Superfund Site Feasibility Study
Crested Butte, Colorado
October 16, 2009

Cell Geometry		
Length to Width	L:W	1.00
Side Slopes	H:V	0.00
Freeboard Height	ft	1.00
Standing Water Depth	ft	0.50
Substrate Thickness	ft	3.50
Gravel Thickness	ft	0.33
Gravel Layer Volume Calculations		
Gravel Top Width	ft	126.5
Gravel top Length	ft	126.5
Gravel Top Area	ft^2	16,000
Gravel Bottom Width	ft	126.5
Gravel Bottom Length	ft	126.5
Gravel Bottom Area	ft^2	16,000
Gravel Volume	ft^3	5,280
	yd^3	196
Hydraulic Retention Time	hours	8
	days	0.3
Substrate Layer Volume Calculations		
Substrate Bottom Area	ft^2	16,000
Substrate Bottom width	ft	126.5
Substrate Bottom length	ft	126.5
Substrate Top Length	ft	126.5
Substrate Top Width	ft	126.5
Substrate Top Area	ft^2	16,000
Substrate Volume	ft^3	56,000
	yd^3	2074
	m^3	1586
Hydraulic Retention Time	hours	84
	days	3.49
Standing Water Layer Volume Calculations		
Water Bottom Width	ft	126.5
Water Bottom length	ft	126.5
Water bottom Area	ft^2	16,000
Water Top Width	ft	126.5
Water Top length	ft	126.5
Water Top Area	ft^2	16,000
Volume of Standing Water Space (Volume of cover fill in water space)	ft^3	8,000
	yd^3	296
Volume of water present	ft^3	4,000
Hydraulic Retention Time	hours	12
	days	0.5
Freeboard Layer Volume Calculations		
Bottom Width	ft	126.5
Bottom length	ft	126.5
Bottom Area	ft^2	16,000
Top Width	ft	126.5
Top length	ft	126.5
Top Area	ft^2	16,000
Freeboard Volume	ft^3	16,000
	yd^3	593
Total Cell Volume	ft^3	85,280
	yd^3	3,159
Total Hydraulic Retention Time	days	4.3

Berm Volume and Total Footprint		
Concrete wall and backfill top width	ft	1.00
Excavation Depth	ft	3.36
total Cell height	ft	5.33
Backfill height	ft	1.97
BCR top width, including concrete walls	ft	128.5
BCR top length including concrete walls	ft	128.49
Volume of Cell above ground	ft^3	31,482
Volume of backfill on outside of concrete	ft^3	4,080
Excavation volume	ft^3	53,798
Concrete Quantities		
Basin floor concrete length	ft	128
Basin floor concrete width	ft	128
Basin floor concrete thickness	ft	0.7
Basin Floor concrete Volume	yd^3	404
Basin wall concrete length	ft	514
Basin wall concrete width	ft	0.7
Basin wall concrete height	ft	5.3
Basin wall concrete volume	yd^3	201
Basin stem wall length	ft	4.0
Basin stem wall width	ft	0.7
Basin stem wall height	ft	4.3
# of stem walls	#	8.0
Stem wall volume	yd^3	3
Porosities		
Substrate porosity	%	50%
Gravel porosity	%	50%
Cover Material porosity	%	50%
Substrate Recipe		
woodchips	% by wt	49%
limestone	% by wt	40%
hay	% by wt	10%
manure	% by wt	1%
total	% by wt	100%
Substrate Quantities For One BCR Cell		
woodchips	lbs	512,738
limestone	lbs	418,562
hay	lbs	104,640
manure	lbs	10,464
total	lbs	1,580,071
Cover Material Quantities for One BCR Cell		
Volume of Cover Material	ft^3	39,253
	yd^3	1,454
Area of Liner Required	ft^2	6,020
Pipe Quantities for One BCR Cell		
perforated Pipe length	ft	1720
Solid pipe length	ft	345
Reducing 4"X4"X2" T fittings	#	98
4" T Fittings	#	3
90° Elbow	#	1
45° Elbow	#	4
2" SCH 80 pipe Caps	#	98
4" SCH 80 Pipe Caps	#	4
Agridrain In Line Water Level Control	#	1

Table B12: Mixing Basin Design Calculations - Alternative 4
Standard Mine Superfund Site Feasibility Study
Crested Butte, Colorado
October 16, 2009

Cell Design		
BCR flow rate	gpm	125
Volume based mixing ratio	BCR:MIW	1.5
MIW flow rate	gpm	83
Total flow rate	gpm	208
Hydraulic retention time	hours	24
Minimum hydraulic volume	gallons	300,000
	ft^3	40,107
	CY	1,485
Sludge production rate	ml sludge/L H_2O	0.5
Sludge removal frequency	times/yr	0.2
Sludge storage volume	gallons	273,938
	ft^3	36,623
	yd^3	1,356
Total cell volume	yd^3	347
Basin Geometry		
Length to width	L:W	2.00
Total cell height	ft	5.2
Freeboard height	ft	1.00
Sludge storage thickness	ft	2.00
Settling volume thickness	ft	2.2
Concrete wall width	ft	1.0
Excavation depth	ft	4.2
Total cell height	ft	5.2
Backfill height	ft	1.0
Freeboard Volume Calculations		
Bottom width	ft	30.0
Bottom length	ft	60.0
Surface area	ft^2	1,800
Freeboard volume	ft^3	1,800
	yd^3	67
Sludge Layer Volume Calculations		
Sludge layer width	ft	30
Sludge layer length	ft	60
Surface area	ft^2	1,800
Sludge storage volume	ft^3	3,600
	yd^3	133

Settling Layer Volume Calculations		
Settling volume width	ft	30
Settling volume length	ft	60
Settling volume surface area	ft^2	1,800
Settling volume	ft^3	3,960
	yd^3	147
Hydraulic retention time	hours	2
	days	0.1
Volume and Footprint Calculations		
Basin top width with concrete walls and berm	ft	32
Basin top length with concrete walls and backfill	ft	62
Basin surface area, with walls and berms	ft^2	1,984
Volume of backfill and cell above ground	ft^3	2,277
Volume of cell above ground	ft^3	1,984
Volume of backfill	ft^3	293
Excavation volume	ft^3	7,376
Concrete Volumes		
Basin floor concrete length	ft	62
Basin floor concrete width	ft	32
Basin floor concrete thickness	ft	0.7
Basin floor concrete volume	ft^3	1,309
	yd^3	48
Basin wall concrete length	ft	188
Basin wall concrete width	ft	0.7
Basin wall concrete height	ft	5
Basin wall concrete volume	ft^3	645
	yd^3	24
Basin stem wall length	ft	4.0
Basin stem wall width	ft	0.7
Basin stem wall height	ft	4.3
# of stem walls	#	8.0
Stem wall concrete volume	ft^3	91
	yd^3	3

Table B13: Settling Basin Design Calculations - Alternative 5
Standard Mine Superfund Site Feasibility Study
Crested Butte, Colorado
October 16, 2009

Settling Basin Design		
Hydraulic retention time	hours	24
total flow	gpm	20
Minimum hydraulic volume	gallons	28,800
	ft^3	3,850
	yd^3	143
Sludge production rate	ml sludge/L H_2O	0.5
Sludge removal frequency	times/yr	0.2
Sludge storage volume	gallons	26,298
	ft^3	3,516
	yd^3	130
Basin Geometry		
Length to width ratio	L:W	1.00
Total cell height	ft	5.2
Freeboard height	ft	1.00
Sludge storage thickness	ft	2.00
Settling volume thickness	ft	2.2
Excavation depth	ft	4.20
Backfill height	ft	1.00
Freeboard Volume Calculations		
Basin width	ft	42.0
Basin length	ft	42.0
Surface area	ft^2	1,764
Freeboard volume	ft^3	1,764
	yd^3	65
Sludge Storage Layer Volume Calculations		
Basin width	ft	42
Basin length	ft	42
Surface area	ft^2	1,764
Sludge storage volume	ft^3	3,528
	yd^3	131

Volume and Footprint Calculations		
Concrete wall and backfill top width	ft	1
Basin top width, including concrete wall and berm	ft	44
Basin top Length including concrete wall and berm	ft	44
Basin top area, including concrete wall and berm	ft^2	1,936
Volume of backfill and basin above ground	ft^3	2,117
Volume of basin above ground	ft^3	1,764
Volume of backfill	ft^3	353
Excavation volume	ft^3	7,409
Settling Layer Volume Calculations		
Settling volume width	ft	42
Settling volume length	ft	42
Settling volume surface area	ft^2	1,764
Settling Volume	ft^3	3,881
	yd^3	144
Hydraulic Retention Time	hours	24
	days	1
Concrete Volumes		
Basin floor concrete length	ft	44
Basin floor concrete width	ft	44
Basin floor concrete thickness	ft	0.7
Basin floor concrete volume	ft^3	1278
	yd^3	47
Basin wall concrete length	ft	176
Basin wall concrete width	ft	0.7
Basin wall concrete height	ft	5.2
Basin wall concrete volume	ft^3	604
	yd^3	22
Basin stem wall length	ft	4.0
Basin stem wall width	ft	0.7
Basin stem wall height	ft	4.3
# of stem walls	#	8.0
Stem wall concrete volume	ft^3	91
	yd^3	3

Table B14: BCR Design Calculations for One BCR Cell - Alternative 5
Standard Mine Superfund Site Feasibility Study
Crested Butte, Colorado
October 16, 2009

Cell Geometry		
Length to Width	L:W	1.00
Side Slopes	H:V	0.00
Freeboard Height	ft	1.00
Standing Water Depth	ft	0.50
Substrate Thickness	ft	3.50
Gravel Thickness	ft	0.33
Gravel Layer Volume Calculations		
Gravel Top Width	ft	48.0
Gravel top Length	ft	48.0
Gravel Top Area	ft^2	2,304
Gravel Bottom Width	ft	48.0
Gravel Bottom Length	ft	48.0
Gravel Bottom Area	ft^2	2,304
Gravel Volume	ft^3	760
	yd^3	28
Hydraulic Retention Time	hours	8
	days	0.3
Substrate Layer Volume Calculations		
Substrate Bottom Area	ft^2	2,304
Substrate Bottom width	ft	48.0
Substrate Bottom length	ft	48.0
Substrate Top Length	ft	48.0
Substrate Top Width	ft	48.0
Substrate Top Area	ft^2	2,304
Substrate Volume	ft^3	8,064
	yd^3	299
	m^3	228
Hydraulic Retention Time	hours	84
	days	3.49
Standing Water Layer Volume Calculations		
Water Bottom Width	ft	48.0
Water Bottom length	ft	48.0
Water bottom Area	ft^2	2,304
Water Top Width	ft	48.0
Water Top length	ft	48.0
Water Top Area	ft^2	2,304
Volume of Standing Water Space (Volume of cover fill in water space)	ft^3	1,152
	yd^3	43
Volume of water present	ft^3	576
Hydraulic Retention Time	hours	12
	days	0.5
Freeboard Layer Volume Calculations		
Bottom Width	ft	48.0
Bottom length	ft	48.0
Bottom Area	ft^2	2,304
Top Width	ft	48.0
Top length	ft	48.0
Top Area	ft^2	2,304
Freeboard Volume	ft^3	2,304
	yd^3	85
Total Cell Volume	ft^3	12,280
	yd^3	455
Total Hydraulic Retention Time	days	4.3

Berm Volume and Total Footprint		
Concrete wall and backfill top width	ft	1.00
Excavation Depth	ft	3.36
total Cell height	ft	5.33
Backfill height	ft	1.97
BCR top width, including concrete walls	ft	50.0
BCR top length including concrete walls	ft	50.00
Volume of Cell above ground	ft^3	4,533
Volume of backfill on outside of concrete	ft^3	1,639
Excavation volume	ft^3	7,747
Concrete Quantities		
Basin floor concrete length	ft	50
Basin floor concrete width	ft	50
Basin floor concrete thickness	ft	0.7
Basin Floor concrete Volume	yd^3	61
Basin wall concrete length	ft	200
Basin wall concrete width	ft	0.7
Basin wall concrete height	ft	5.3
Basin wall concrete volume	yd^3	52
Basin stem wall length	ft	4.0
Basin stem wall width	ft	0.7
Basin stem wall height	ft	4.3
# of stem walls	#	8.0
Stem wall volume	yd^3	3
Porosities		
Substrate porosity	%	50%
Gravel porosity	%	50%
Cover Material porosity	%	50%
Substrate Recipe		
woodchips	% by wt	49%
limestone	% by wt	40%
hay	% by wt	10%
manure	% by wt	1%
total	% by wt	100%
Substrate Quantities For One BCR Cell		
woodchips	lbs	73,834
limestone	lbs	60,273
hay	lbs	15,068
manure	lbs	1,507
total	lbs	227,530
Cover Material Quantities for One BCR Cell		
Volume of Cover Material	ft^3	5,484
	yd^3	203
Area of Liner Required	ft^2	1,562
Pipe Quantities for One BCR Cell		
perforated Pipe length	ft	464
Solid pipe length	ft	148
Reducing 4"X4"X2" T fittings	#	35
4" T Fittings	#	3
90° Elbow	#	1
45° Elbow	#	4
2" SCH 80 pipe Caps	#	35
4" SCH 80 Pipe Caps	#	4
Agridrain In Line Water Level Control	#	1

Table B15: Mixing Basin Design Calculations - Alternative 5
Standard Mine Superfund Site Feasibility Study
Crested Butte, Colorado
October 16, 2009

Cell Design		
BCR flow rate	gpm	12
Volume based mixing ratio	BCR:MIW	1.5
MIW flow rate	gpm	8
Total flow rate	gpm	20
Hydraulic retention time	hours	24
Minimum hydraulic volume	gallons	28,800
	ft^3	3,850
	CY	143
Sludge production rate	ml sludge/L H_2O	0.5
Sludge removal frequency	times/yr	0.2
Sludge storage volume	gallons	26,298
	ft^3	3,516
	yd^3	130
Total cell volume	yd^3	347
Basin Geometry		
Length to width	L:W	2.00
Total cell height	ft	5.2
Freeboard height	ft	1.00
Sludge storage thickness	ft	2.00
Settling volume thickness	ft	2.2
Concrete wall width	ft	1.0
Excavation depth	ft	4.2
Total cell height	ft	5.2
Backfill height	ft	1.0
Freeboard Volume Calculations		
Bottom width	ft	30.0
Bottom length	ft	60.0
Surface area	ft^2	1,800
Freeboard volume	ft^3	1,800
	yd^3	67
Sludge Layer Volume Calculations		
Sludge layer width	ft	30
Sludge layer length	ft	60
Surface area	ft^2	1,800
Sludge storage volume	ft^3	3,600
	yd^3	133

Settling Layer Volume Calculations		
Settling volume width	ft	30
Settling volume length	ft	60
Settling volume surface area	ft^2	1,800
Settling volume	ft^3	3,960
	yd^3	147
Hydraulic retention time	hours	25
	days	1.0
Volume and Footprint Calculations		
Basin top width with concrete walls and berm	ft	32
Basin top length with concrete walls and backfill	ft	62
Basin surface area, with walls and berms	ft^2	1,984
Volume of backfill and cell above ground	ft^3	2,277
Volume of cell above ground	ft^3	1,984
Volume of backfill	ft^3	293
Excavation volume	ft^3	7,376
Concrete Volumes		
Basin floor concrete length	ft	62
Basin floor concrete width	ft	32
Basin floor concrete thickness	ft	0.7
Basin floor concrete volume	ft^3	1,309
	yd^3	48
Basin wall concrete length	ft	188
Basin wall concrete width	ft	0.7
Basin wall concrete height	ft	5
Basin wall concrete volume	ft^3	645
	yd^3	24
Basin stem wall length	ft	4.0
Basin stem wall width	ft	0.7
Basin stem wall height	ft	4.3
# of stem walls	#	8.0
Stem wall concrete volume	ft^3	91
	yd^3	3

APPENDIX C:
CALCULATION OF PREDICTED ELK-08 CONCENTRATIONS

Table C1: Predicted Metals Concentrations at Elk-08 With Natural Attenuation
Standard Mine Superfund Site Feasibilty Study
Crested Butte, Colorado

Alternative	PTS Design Flow Rate (gpm)	Metal	Dissolved Concentration at Elk-08 (With Natural Attenuation)		Water Quality Standard	
			ug/L		ug/L	
			June	September	Chronic	Acute
1	20	Cadmium	0.82	0.51	0.31	1.2
	20	Copper	3.49	0.05	6.2	9
	20	Lead	6.89	0.36	1.6	40
	20	Manganese	53.71	314.76	1430	2590
	20	Zinc	155.13	106.75	86	99
2	50	Cadmium	0.40	0.51	0.31	1.2
	50	Copper	1.63	0.05	6.2	9
	50	Lead	3.88	0.36	1.6	40
	50	Manganese	53.71	314.76	1430	2590
	50	Zinc	84.68	106.75	86	99
3	160	Cadmium	0.04	0.51	0.31	1.2
	160	Copper	0.04	0.05	6.2	9
	160	Lead	1.33	0.36	1.6	40
	160	Manganese	53.71	314.76	1430	2590
	160	Zinc	24.72	106.75	86	99
4	125	Cadmium	0.03	0.49	0.31	1.2
	125	Copper	0.04	0.05	6.2	9
	125	Lead	1.28	0.33	1.6	40
	125	Manganese	53.71	314.76	1430	2590
	125	Zinc	23.64	100.26	86	99
5	20	Cadmium	0.82	0.51	0.31	1.2
	20	Copper	3.49	0.05	6.2	9
	20	Lead	6.89	0.36	1.6	40
	20	Manganese	53.71	314.76	1430	2590
	20	Zinc	155.13	106.75	86	99

Notes:
All concentrations are dissolved.
ug/l= micro grams per liter
gpm= gallons per minute
PTS= Passive treatment system
Calculations and data assumptions provided in table C2-C5
Values highlighted in gray exceeded the chronic water quality standard
Values highlighted in red exceeded the chronic and acute water quality standards

Golder Associates Inc.

Table C2: Predicted Metals Concentrations at Elk-10 (No Natural Attenuation), Elk-08 (No Natural Attenuation), and Elk-08 (With Natural Attenuation)
Standard Mine Superfund Site Feasibilty Study
Crested Butte, Colorado

Alternative	PTS Design Flow Rate (gpm)	Metal	% Removal	Influent (SM-00) Average Concentration		SM-00 Average Flow Rate		Elk-29 Average Load		Load Discharged from the PTS		Total Load (ELK29+PTS)		Flow Rate at Elk-10		Concentration at Elk-10 (No Natural Attenuation)		Flow Rate at Elk-08		Concentration at Elk-08 (No Natural Attenuation)		Average Natural Attenuation Between Elk-10 and ELK-8		Concentration at Elk-08 (With Natural Attenuation)		Water Quality Standard	
				ug/L		gpm		lb/day		lb/day		lb/day		gpm		ug/L		gpm		ug/L		Percent (%)		ug/L		ug/L	
				June	September	June	September	June	September	June	September	June	September	June	September	June	September	June	September	June	September	June	September	June	September	Chronic	Acute
1	20	Cadmium	99.7%	120	145	75.5	9.2	0.003	0.001	0.08	0.00	0.084	0.001	4269	98.7	1.63	1.01	7852	150	0.89	0.66	6.93	23.27	0.82	0.51	0.31	1.2
	20	Copper	99.2%	663	184	75.5	9.2	0.001	0.000	0.44	0.00	0.444	0.000	4269	98.7	8.66	0.18	7852	150	4.71	0.12	25.93	57.10	3.49	0.05	6.2	9
	20	Lead	98.5%	1211	427	75.5	9.2	0.173	0.003	0.81	0.00	0.986	0.003	4269	98.7	19.21	2.86	7852	150	10.44	1.88	34.02	80.84	6.89	0.36	1.6	40
	20	Manganese	0%	6280	11050	75.5	9.2	0	0.004	5.70	1.22	5.701	1.226	4269	98.7	111.11	1033.07	7852	150	60.41	680.47	11.09	53.74	53.71	314.76	1430	2590
	20	Zinc	98.2%	20020	25550	75.5	9.2	2.160	0.228	13.45	0.05	15.609	0.279	4269	98.7	304.22	234.98	7852	150	165.40	154.78	6.21	31.03	155.13	106.75	86	99
2	50	Cadmium	99.7%	120	145	75.5	9.2	0.003	0.001	0.04	0.00	0.040	0.001	4269	98.7	0.79	1.01	7852	150	0.43	0.66	6.93	23.27	0.40	0.51	0.31	1.2
	50	Copper	99.2%	663	184	75.5	9.2	0.001	0.000	0.21	0.00	0.207	0.000	4269	98.7	4.04	0.18	7852	150	2.20	0.12	25.93	57.10	1.63	0.05	6.2	9
	50	Lead	98.5%	1211	427	75.5	9.2	0.173	0.003	0.38	0.00	0.556	0.003	4269	98.7	10.83	2.86	7852	150	5.89	1.88	34.02	80.84	3.88	0.36	1.6	40
	50	Manganese	0%	6280	11050	75.5	9.2	0	0.004	5.70	1.22	5.701	1.226	4269	98.7	111.11	1033.07	7852	150	60.41	680.47	11.09	53.74	53.71	314.76	1430	2590
	50	Zinc	98.2%	20020	25550	75.5	9.2	2.160	0.228	6.36	0.05	8.520	0.279	4269	98.7	166.07	234.98	7852	150	90.29	154.78	6.21	31.03	84.68	106.75	86	99
3	160	Cadmium	99.7%	120	145	75.5	9.2	0.003	0.001	0.00	0.00	0.004	0.001	4269	98.7	0.07	1.01	7852	150	0.04	0.66	6.93	23.27	0.04	0.51	0.31	1.2
	160	Copper	99.2%	663	184	75.5	9.2	0.001	0.000	0.00	0.00	0.006	0.000	4269	98.7	0.11	0.18	7852	150	0.06	0.12	25.93	57.10	0.04	0.05	6.2	9
	160	Lead	98.5%	1211	427	75.5	9.2	0.173	0.003	0.02	0.00	0.190	0.003	4269	98.7	3.69	2.86	7852	150	2.01	1.88	34.02	80.84	1.33	0.36	1.6	40
	160	Manganese	0%	6280	11050	75.5	9.2	0	0.004	5.70	1.22	5.701	1.226	4269	98.7	111.11	1033.07	7852	150	60.41	680.47	11.09	53.74	53.71	314.76	1430	2590
	160	Zinc	98.2%	20020	25550	75.5	9.2	2.160	0.228	0.33	0.05	2.487	0.279	4269	98.7	48.47	234.98	7852	150	26.36	154.78	6.21	31.03	24.72	106.75	86	99
4	125	Cadmium	99.9%	120	145	75.5	9.2	0.003	0.001	0.00	0.00	0.004	0.001	4269	98.7	0.07	0.98	7852	150	0.04	0.64	6.93	23.27	0.03	0.49	0.31	1.2
	125	Copper	99.2%	663	184	75.5	9.2	0.001	0.000	0.00	0.00	0.005	0.000	4269	98.7	0.11	0.17	7852	150	0.06	0.11	25.93	57.10	0.04	0.05	6.2	9
	125	Lead	99.1%	1211	427	75.5	9.2	0.173	0.003	0.01	0.00	0.183	0.003	4269	98.7	3.57	2.63	7852	150	1.94	1.73	34.02	80.84	1.28	0.33	1.6	40
	125	Manganese	0%	6280	11050	75.5	9.2	0	0.004	5.70	1.22	5.701	1.226	4269	98.7	111.11	1033.07	7852	150	60.41	680.47	11.09	53.74	53.71	314.76	1430	2590
	125	Zinc	98.8%	20020	25550	75.5	9.2	2.160	0.228	0.22	0.03	2.378	0.262	4269	98.7	46.35	220.69	7852	150	25.20	145.37	6.21	31.03	23.64	100.26	86	99
5	20	Cadmium	99.7%	120	145	75.5	9.2	0.003	0.001	0.08	0.00	0.084	0.001	4269	98.7	1.63	1.01	7852	150	0.89	0.66	6.93	23.27	0.82	0.51	0.31	1.2
	20	Copper	99.2%	663	184	75.5	9.2	0.001	0.000	0.44	0.00	0.444	0.000	4269	98.7	8.66	0.18	7852	150	4.71	0.12	25.93	57.10	3.49	0.05	6.2	9
	20	Lead	98.5%	1211	427	75.5	9.2	0.173	0.003	0.81	0.00	0.986	0.003	4269	98.7	19.21	2.86	7852	150	10.44	1.88	34.02	80.84	6.89	0.36	1.6	40
	20	Manganese	0%	6280	11050	75.5	9.2	0	0.004	5.70	1.22	5.701	1.226	4269	98.7	111.11	1033.07	7852	150	60.41	680.47	11.09	53.74	53.71	314.76	1430	2590
	20	Zinc	98.2%	20020	25550	75.5	9.2	2.160	0.228	13.45	0.05	15.609	0.279	4269	98.7	304.22	234.98	7852	150	165.40	154.78	6.21	31.03	155.13	106.75	86	99

Notes:
ug/l= micro grams per liter
gpm= gallons per minute
lb/day+ pounds per day
PTS= Passive treatment system
Load= Concentration * Flow Rate
For calculations:
The average flow rates for June and September at each location included in Appendix C were used
The average metals concentrations for June and September at each location included in Appendix C were used
The average load rate calculated for June and September at each location included in Appendix C were used
The percent removal by the treatment system presented in Table 4 are used, manganese removal is assumed to be zero and is not added to the waters
The average natural attenuation rates calculated between ELK-10 and ELK-08 for June and September, included in Appendix C, were used
The discharge load from the passive treatment system includes the treated and untreated potion of the SM-00 influent
The total load assumes the only sources of metals contamination are from ELK-29 and the PTS
Values highlighted in gray exceeded the chronic water quality standard
Values highlighted in red exceeded the chronic and acute water quality standards

Table C3
June and September Flow Rate Measurements for the Selected Sampling Locations
Standard Mine Superfund Site, Crested Butte, CO

Location	Measured Flow Rates (cfs)										Average Flow Rates (cfs)		Average Flow Rates (gpm)	
	June-05	September-05	June-06	September-06	June-07	September-07	June-08	September-08	June-09	September-09	June	September	June	September
ELK-29	NA	0.44	0.6068	0.02	1.39	NA	28.41	0.035	0.72	NA	7.78	0.17	3493	74.1
SM-00	NA	NA	0.0832	0.021	0.13	NA	0.28	0.02	0.18	NA	0.17	0.02	75.5	9.20
ELK-10	5.1	0.44	0.82	0.08	1.94	NA	37.82	0.14	1.88	NA	9.51	0.22	4269	98.7
COP-01	NA	0.01	0.49	0.01	1.44	NA	0.01	0.01	0.01	NA	0.49	0.01	219	4.49
ELK-08	NA	0.56	2.29	0.172	6.46	NA	57.21	0.27	4.02	NA	17.50	0.33	7852	150
ELK-06	NA	0.56	2.44	0.235	6.46	NA	47.72	0.29	5.8	NA	15.61	0.36	7004	162
ELK-05	NA	0.59	4.89	0.79	10.3	NA	59.06	1.78	9.28	NA	20.88	1.05	9372	473
ELK-00	10.8	0.4	5.97	1.29	7.4	NA	21.2	0.538	10.83	NA	11.24	0.74	5045	333

Notes:
cfs= cubic feet per second
gpm=gallons per minute
NA= Measurement not available or not applicable
Average flow rates were calculated for June and September.
Flows for the September 2007 event have been omitted because the sampling was conducted during a large storm event.
Flow rate data was provided by URS Operating Services.

Table C4
June and September Metal Concentrations for the Selected Sampling Locations
Standard Mine Superfund Site, Crested Butte, CO

METALS CONCENTRATIONS (ug/l)

Dissolved Cadmium

Sampling Location	June-05	September-05	June-06	September-06	June-07	September-07	June-08	September-08	June-09	September-09	Average June Concentration	Average September Concentration
ELK-29	NA	1.3	0.75	1.12	1.09	0.971	0	1.26	0.837	1	0.67	1.13
SM-00	133	126	142	154	113	147	80.1	154	131	NA	119.82	145.25
ELK-10	14.8	32.3	16.5	42.5	14.3	25.9	3.36	15.5	7.55	34.4	11.30	30.12
COP-01	NA	NA	0	0	0	0	0	NA	NA	NA	0.00	0.00
ELK-08	NA	15.4	6.4	18.7	5.3	15.8	1.36	6.02	2.8	8.63	3.97	12.91
ELK-06	NA	8.5	5.71	15.1	4.21	15.3	1.39	5.15	2.53	5.46	3.46	9.90
ELK-05	6	2.2	2.64	5.38	3.77	9.38	1.07	1.1	1.67	1.77	3.03	3.97
ELK-00	4.1	1.7	2.5	3.19	3.21	10.3	0.853	1.46	1.39	1.14	2.41	3.56

Dissolved Copper

Sampling Location	June-05	September-05	June-06	September-06	June-07	September-07	June-08	September-08	June-09	September-09	Average June Concentration	Average September Concentration
ELK-29	NA	0	1.1	1.38	0	0	0	0	0	NA	0.28	0.35
SM-00	867	138	733	212	624	228	495	159	594	NA	662.60	184.25
ELK-10	37.9	39.1	43.9	46.7	39.2	10.6	14.1	0	0	NA	27.02	24.10
COP-01	NA		0	0	0	0	0	NA	NA	NA	0.00	0.00
ELK-08	NA	15.4	14.5	7.75	15.3	8.52	0	0	0	NA	7.45	7.92
ELK-06	NA	0	13.9	5.21	11.7	8.56	0	0	0	NA	6.40	3.44
ELK-05	27.2	0	6.39	1.98	11.8	5.69	0	0	0	NA	9.08	1.92
ELK-00	12.6	0	5.28	1.92	7.74	7.32	0	0	0	NA	5.12	2.31

Dissolved Lead

Sampling Location	June-05	September-05	June-06	September-06	June-07	September-07	June-08	September-08	June-09	September-09	Average June Concentration	Average September Concentration
ELK-29	NA	3.3	4.6	1.01	5.12	1.42	4.05	0.559	4.64	0.794	4.60	1.42
SM-00	1530	207	1290	546	990	716	994	239	1250	NA	1210.80	427.00
ELK-10	41.1	25.6	66	44.4	53	5.2	24.4	4.06	31.4	7.49	43.18	17.35
COP-01	NA	NA	0	0	0	0	0	NA	NA	NA	0.00	0.00
ELK-08	NA	5.7	16.7	2.45	16.8	4.47	5.57	0.364	7.81	0.806	11.72	2.76
ELK-06	NA	0	11.9	1.26	6.7	3.65	4.82	0	6.16	0.33	7.40	1.05
ELK-05	13.3	0	5.11	0.472	13.5	2.59	3.29	0	3.91	0.2	7.82	0.65
ELK-00	6.3	0	2.74	0.208	7.01	1.87	1.75	0	2.06	0.2	3.97	0.46

Dissolved Manganese

Sampling Location	June-05	September-05	June-06	September-06	June-07	September-07	June-08	September-08	June-09	September-09	Average June Concentration	Average September Concentration
ELK-29	NA	5.12	0	0	0	0	0	0	0	5	0.00	2.02
SM-00	6760	11200	8450	11100	5720	10500	3990	11400	6480	NA	6280.00	11050.00
ELK-10	660	1230	807	2250	660	1950	143	3000	341	1510	522.20	1988.00
COP-01	NA	NA	13.5	33.8	46.4	41.2	0	NA	NA	NA	19.97	37.50
ELK-08	NA	546	259	795	230	1200	80.7	98.1	103	83.5	168.18	544.52
ELK-06	NA	11	198	453	185	1000	61.7	5.56	77	10	130.43	295.91
ELK-05	262	0	86.4	139	152	621	45.1	0	51.1	5	119.32	153.00
ELK-00	116	0	45.8	22	89.2	792	29.1	0	23.9	5	60.80	163.80

Dissolved Zinc

Sampling Location	June-05	September-05	June-06	September-06	June-07	September-07	June-08	September-08	June-09	September-09	Average June Concentration	Average September Concentration
ELK-29	NA	266	145	210	214	208	39.2	158	142	187	135.05	205.80
SM-00	22800	23800	25100	26500	19900	25400	12900	26500	19400	NA	20020.00	25550.00
ELK-10	2500	5570	3070	8230	2520	4820	548	6710	1170	7220	1961.60	6510.00
COP-01	NA	NA	0	0	0	0	0	NA	NA	NA	0.00	0.00
ELK-08	NA	3110	1140	3770	909	2670	253	1300	446	1910	687.00	2552.00
ELK-06	NA	1660	1090	3250	717	2670	258	1010	423	1080	622.00	1934.00
ELK-05	1110	483	515	1140	663	1670	207	217	299	366	558.80	775.20
ELK-00	759	344	517	643	587	1830	170	262	256	211	457.80	658.00

Notes:
All concentrations are in micrograms per liter (ug/l)
NA= Not analyzed
A concentration of zero is used for non-detected values
Metal concentration data was provided by URS Operating Services.

Table C5
Loading Rate Calculations for the Various Sampling Locations
Standard Mine Superfund Site, Crested Butte, CO

LOADING RATE (lb/day)

Dissolved Cadmium

Sampling Location	June-05	September-05	June-06	September-06	June-07	September-07	June-08	September-08	June-09	September-09	Average June Loading	Average September Loading
ELK-29	NA	0.00	0.00	0.00	0.01	NA	0.00	0.00	0.00	NA	0.00	0.00
SM-00	NA	NA	0.06	0.02	0.08	NA	0.12	0.02	0.13	NA	0.10	0.02
ELK-10	0.41	0.08	0.07	0.02	0.15	NA	0.69	0.01	0.08	NA	0.28	0.04
COP-01	NA	NA	0.00	0.00	0.00	NA	0.00	NA	NA	NA	0.00	0.00
ELK-08	NA	0.05	0.08	0.02	0.18	NA	0.42	0.01	0.06	NA	0.19	0.02
ELK-06	NA	0.03	0.08	0.02	0.15	NA	0.36	0.01	0.08	NA	0.16	0.02
ELK-05	NA	0.01	0.07	0.02	0.21	NA	0.34	0.01	0.08	NA	0.18	0.01
ELK-00	0.24	0.00	0.08	0.02	0.13	NA	0.10	0.00	0.08	NA	0.13	0.01
Natural Attenuation Between Elk-10 and ELK-8 (% Reduction)	NA	39.32	-8.32	5.40	-23.42	NA	38.77	25.10	20.70	NA	6.93	23.27

Dissolved Copper

Sampling Location	June-05	September-05	June-06	September-06	June-07	September-07	June-08	September-08	June-09	September-09	Average June Loading	Average September Loading
ELK-29	NA	0.00	0.00	0.00	0.00	NA	0.00	0.00	0.00	NA	0.00	0.00
SM-00	NA	NA	0.33	0.02	0.44	NA	0.75	0.02	0.58	NA	0.52	0.02
ELK-10	1.04	0.09	0.19	0.02	0.41	NA	2.88	0.00	0.00	NA	0.90	0.04
COP-01	NA	0.00	0.00	0.00	0.00	NA	0.00	NA	NA	NA	0.00	0.00
ELK-08	NA	0.05	0.18	0.01	0.53	NA	0.00	0.00	0.00	NA	0.18	0.02
ELK-06	NA	0.00	0.18	0.01	0.41	NA	0.00	0.00	0.00	NA	0.15	0.00
ELK-05	NA	0.00	0.17	0.01	0.66	NA	0.00	0.00	0.00	NA	0.21	0.00
ELK-00	0.73	0.00	0.17	0.01	0.31	NA	0.00	0.00	0.00	NA	0.24	0.00
Natural Attenuation Between Elk-10 and ELK-8 (% Reduction)	NA	49.87	7.76	64.32	-29.97	NA	100.00	NA	NA	NA	25.93	57.10

Dissolved Lead

Sampling Location	June-05	September-05	June-06	September-06	June-07	September-07	June-08	September-08	June-09	September-09	Average June Loading	Average September Loading
ELK-29	NA	0.01	0.02	0.00	0.04	NA	0.62	0.00	0.02	NA	0.17	0.00
SM-00	NA	NA	0.58	0.06	0.69	NA	1.50	0.03	1.21	NA	1.00	0.04
ELK-10	1.13	0.06	0.29	0.02	0.55	NA	4.98	0.00	0.32	NA	1.45	0.03
COP-01	NA	NA	0.00	0.00	0.00	NA	0.00	NA	NA	NA	0.00	0.00
ELK-08	NA	0.02	0.21	0.00	0.59	NA	1.72	0.00	0.17	NA	0.67	0.01
ELK-06	NA	0.00	0.16	0.00	0.23	NA	1.24	0.00	0.19	NA	0.46	0.00
ELK-05	NA	0.00	0.13	0.00	0.75	NA	1.05	0.00	0.20	NA	0.53	0.00
ELK-00	0.37	0.00	0.09	0.00	0.28	NA	0.20	0.00	0.12	NA	0.21	0.00
Natural Attenuation Between Elk-10 and ELK-8 (% Reduction)	NA	71.66	29.34	88.14	-5.55	NA	65.47	82.71	46.81	NA	34.02	80.84

Dissolved Manganese

Sampling Location	June-05	September-05	June-06	September-06	June-07	September-07	June-08	September-08	June-09	September-09	Average June Loading	Average September Loading
ELK-29	NA	0.01	0.00	0.00	0.00	NA	0.00	0.00	0.00	NA	0.00	0.00
SM-00	NA	NA	3.79	1.26	4.01	NA	6.03	1.23	6.29	NA	5.03	1.24
ELK-10	18.16	2.92	3.57	0.97	6.91	NA	29.18	2.27	3.46	NA	12.26	2.05
COP-01	NA	NA	0.04	0.00	0.36	NA	0.00	NA	NA	NA	0.13	0.00
ELK-08	NA	1.65	3.20	0.74	8.02	NA	24.91	0.14	2.23	NA	9.59	0.84
ELK-06	NA	0.03	2.61	0.57	6.45	NA	15.89	0.01	2.41	NA	6.84	0.21
ELK-05	NA	0.00	2.28	0.59	8.45	NA	14.37	0.00	2.56	NA	6.91	0.20
ELK-00	6.76	0.00	1.48	0.15	3.56	NA	3.33	0.00	1.40	NA	3.30	0.05
Natural Attenuation Between Elk-10 and ELK-8 (% Reduction)	NA	43.50	10.37	24.03	-16.04	NA	14.63	93.69	35.41	NA	11.09	53.74

Dissolved Zinc

Sampling Location	June-05	September-05	June-06	September-06	June-07	September-07	June-08	September-08	June-09	September-09	Average June Loading	Average September Loading
ELK-29	NA	0.63	0.47	0.02	1.60	NA	6.01	0.03	0.55	NA	2.16	0.23
SM-00	NA	NA	11.27	3.00	13.96	NA	19.49	2.86	18.84	NA	15.89	2.93
ELK-10	68.79	13.22	13.58	3.55	26.38	NA	111.82	5.07	11.87	NA	46.49	7.28
COP-01	NA	NA	0.00	0.00	0.00	NA	0.00	NA	NA	NA	0.00	0.00
ELK-08	NA	9.40	14.08	3.50	31.68	NA	78.09	1.89	9.67	NA	33.38	4.93
ELK-06	NA	5.02	14.35	4.12	24.99	NA	66.43	1.58	13.24	NA	29.75	3.57
ELK-05	NA	1.54	13.59	4.86	36.84	NA	65.96	2.08	14.97	NA	32.84	2.83
ELK-00	44.23	0.74	16.65	4.48	23.44	NA	19.44	0.76	14.96	NA	23.74	1.99
Natural Attenuation Between Elk-10 and ELK-8 (% Reduction)	NA	28.94	-3.70	1.51	-20.11	NA	30.16	62.64	18.49	NA	6.21	31.03

Notes:
All rates reported in pounds per day (lb/day)
Loading Rate= Concentration* Flow Rate
NA= Not applicable, Loading not calculated where concentration or flow data is not available
Natural Attenuation Between Elk-10 and ELK-8 calculation: 100*[(ELK-10 Loading- ELK-10 Loading)/(ELK-10 Loading)]

APPENDIX D:
ANNUAL METAL MASS REMOVAL CALCULATIONS

Table D1: Alternative 1 Mass Removal of Metals

Standard Mine Superfund Site, Crested Butte, CO

MIW Flow Rate Data						
Peak Flow	gpm	200	200	200	200	Assumed Value
Low flow	gpm	10	10	10	10	
Average Flow	gpm	30	30	30	30	assumption
Peak Flow Duration	days	30	30	30	30	assumed one month of peak runoff
Low Flow Duration	days	244	244	244	244	Assumed october - April
Average Flow duration	days	91	91	91	91	365 days/year - other flow durations
MIW Concentrations						
		Zinc	Cadmium	Copper	Lead	
Influent	mg/L	26.5	0.14	0.26	0.502	Average Influent concentrations from 2008 Reisman Report, Table 6
BCR Effluent	mg/L	0.33	0.000065	0.0013	0.0019	BCR Effluent concentration from mixing study report, table 4
Mixing Basin effluent	mg/L	0.50	0.00055	0.0013	0.0030	mixing study report table 4
Mixing Basin Performance Data						
BCR Design Flow	gpm	12	12	12	12	RIFS Design
Mixing Ratio	BCR:MIW	1.5	1.5	1.5	1.5	Value used in PTS Designs for RIFS
Mixing Pond Max MIW Flo	gpm	8	8	8	8	Calculated based on mixing ratio
Note- Assume that Mixing basin flow only occurs if MIW flow is greater than BCR max flow						
Low Flow Analysis						
m_{MIW}	lb/d	3.18	0.02	0.03	0.06	
m_{BCR}	lb/d	0.040	0.000	0.000	0.000	
C_{BCR}	mg/L	0.330	0.000	0.001	0.002	
Removal	%	98.8%	100.0%	99.5%	99.6%	
Average Flow Analysis						
m_{MIW}	lb/d	9.55	0.05	0.09	0.18	
Q_2	gpm	10.00	10.00	10.00	10.00	
m_2	lb/d	3.18	0.02	0.03	0.06	
Q_3	gpm	20.00	20.00	20.00	20.00	
m_3	lb/d	0.12	0.00	0.00	0.00	
m_4	lb/d	3.30	0.02	0.03	0.06	
C_4	mg/L	9.2	0.0	0.1	0.2	
High Flow Analysis						
m_{MIW}	lb/d	64	0	1	1	
Q_2	gpm	180	180	180	180	
m_2	lb/d	57.3	0.3	0.6	1.1	
Q_3	gpm	20	20	20	20	
m_3	lb/d	0.12	0.00	0.00	0.00	
m_4	lb/d	57	0	1	1	
C_4	mg/L	23.9	0.1	0.2	0.5	
yearly mass removal analysis						
m_{MIW}	lb/year	3559	19	35	67	
m_4	lb/year	2034	11	20	38	
Metal Removed	lb/year	1525	8	15	29	

Table D2: Alternative 2 Mass Removal of Metals

Standard Mine Superfund Site, Crested Butte, CO

MIW Flow Rate Data						
Peak Flow	gpm	200	200	200	200	Equal to Option 1 Value
Low flow	gpm	10	10	10	10	Equal to Option 1 Value
Average Flow	gpm	30	30	30	30	Equal to Option 1 Value
Peak Flow Duration	days	30	30	30	30	Equal to Option 1 Value
Low Flow Duration	days	244	244	244	244	Equal to Option 1 Value
Average Flow duration	days	91	91	91	91	365 days/year - other flow durations
MIW Concentrations						
		Zinc	**Cadmium**	**Copper**	**Lead**	
Influent	mg/L	26.5	**0.14**	**0.26**	**0.502**	Average of winter 08 - 09 influent concentrations, total Zn
BCR Effluent	mg/L	0.3	**0.000065**	**0.0013**	**0.0019**	BCR Effluent concentration from mixing study
Mixing Basin effluent Zinc	mg/L	0.5	**0.00055**	**0.0013**	**0.0030**	mixing study report table 4
Note- Assume that Mixing basin flow only occurs if MIW flow is greater than BCR max flow						
Design Parameters						
		Zinc	**Cadmium**	**Copper**	**Lead**	
BCR Max flow	gpm	**30**	**30**	**30**	**30**	RIFS Design
Mixing Ratio	BCR:MIW	1.5	1.5	1.5	1.5	Value used in PTS Designs for RIFS
Mixing Pond Max MIW Flow	gpm	20	20	20	20	Calculated based on mixing ratio
Note- Assume that Mixing basin flow only occurs if MIW flow is greater than BCR max flow						
Low Flow Analysis						
		Zinc	**Cadmium**	**Copper**	**Lead**	
m_{MIW}	lb/d	3.18	0.02	0.03	0.06	
m_{BCR}	lb/d	0.040	0.000	0.000	0.000	
C_{BCR}	mg/L	0.330	0.000	0.001	0.002	
Zinc Removal	%	98.8%	100.0%	99.5%	99.6%	
Average Flow Analysis						
		Zinc	**Cadmium**	**Copper**	**Lead**	
m_{MIW}	lb/d	9.55	0.05	0.09	0.18	
Q_2	gpm	**0.00**	**0.00**	**0.00**	**0.00**	set to zero, no bypass at this flow rate
m_2	lb/d	0.00	0.00	0.00	0.00	set to zero, no bypass at this flow rate
Q_3	gpm	30.00	30.00	30.00	30.00	set equal to total flow, no mixing
m_3	lb/d	0.12	0.00	0.00	0.00	
m_4	lb/d	0.12	0.00	0.00	0.00	
C_4	mg/L	0.33	0.00	0.00	0.00	
High Flow Analysis						
		Zinc	**Cadmium**	**Copper**	**Lead**	
m_{MIW}	lb/d	64	0	1	1	
Q_2	gpm	150	150	150	150	
m_2	lb/d	48	0	0	1	
Q_3	gpm	50	50	50	50	
m_3	lb/d	0.30	0.00	0.00	0.00	
m_4	lb/d	48	0	0	1	
C_4	mg/L	20.0	0.1	0.2	0.4	
yearly mass removal analysis						
		Zinc	**Cadmium**	**Copper**	**Lead**	
m_{MIW}	lb/year	3559	19	35	67	
m_4	lb/year	1462	8	14	27	
Metal Removed	lb/year	2097	11	21	40	

Table D3: Alternative 3 Mass Removal of Metals

Standard Mine Superfund Site, Crested Butte, CO

MIW Flow Rate Data						
Peak Flow	gpm	200	200	200	200	Equal to Option 1 Value
Low flow	gpm	10	10	10	10	Equal to Option 1 Value
Average Flow	gpm	30	30	30	30	Equal to Option 1 Value
Peak Flow Duration	days	30	30	30	30	Equal to Option 1 Value
Low Flow Duration	days	244	244	244	244	Equal to Option 1 Value
Average Flow duration	days	91	91	91	91	365 days/year - other flow durations
Zinc Concentrations						
		Zinc	**Cadmium**	**Copper**	**Lead**	
Influent	mg/L	26.5	**0.14**	**0.26**	**0.502**	Average of winter 08 - 09 influent concentrations, total Zr
BCR Effluent	mg/L	0.3	**0.000065**	**0.0013**	**0.0019**	BCR Effluent concentration from mixing study
Mixing Basin effluent Zi	mg/L	0.5	**0.00055**	**0.0013**	**0.0030**	mixing study report table 4
Design Parameters						
		Zinc	**Cadmium**	**Copper**	**Lead**	
BCR Max flow	gpm	**96**	**96**	**96**	**96**	RIFS Design
Mixing Ratio	BCR:MIW	1.5	1.5	1.5	1.5	Value used in PTS Designs for RIFS
Mixing Pond Max MIW	gpm	64	64	64	64	Calculated based on mixing ratio
Note- Assume that Mixing basin flow only occurs if MIW flow is greater than BCR max flow						
Low Flow Analysis						
		Zinc	**Cadmium**	**Copper**	**Lead**	
m_{MIW}	lb/d	3.18	0.02	0.03	0.06	
m_{BCR}	lb/d	0.040	0.000	0.000	0.000	
C_{BCR}	mg/L	0.330	0.000	0.001	0.002	
Removal	%	98.8%	100.0%	99.5%	99.6%	
Average Flow Analysis						
		Zinc	**Cadmium**	**Copper**	**Lead**	
m_{MIW}	lb/d	9.55	0.05	0.09	0.18	
Q_2	gpm	**0.00**	**1.00**	**2.00**	**3.00**	set to zero, no bypass at this flow rate
m_2	lb/d	0.00	0.00	0.01	0.02	set to zero, no bypass at this flow rate
Q_3	gpm	30.00	30.00	30.00	30.00	set to total flow, no mixing at this flow rate
m_3	lb/d	0.12	0.00	0.00	0.00	
m_4	lb/d	0.12	0.00	0.01	0.02	
C_4	mg/L	0.3	0.0	0.0	0.1	
High Flow Analysis						
		Zinc	**Cadmium**	**Copper**	**Lead**	
m_{MIW}	lb/d	64	0	1	1	
Q_2	gpm	40	40	40	40	
m_2	lb/d	13	0	0	0	
Q_3	gpm	160	160	160	160	
m_3	lb/d	0.96	0.00	0.00	0.01	
m_4	lb/d	14	0	0	0	
C_4	mg/L	5.7	0.0	0.1	0.1	
yearly mass removal analysis						
		Zinc	**Cadmium**	**Copper**	**Lead**	
m_{MIW}	lb/year	3559	19	35	67	
m_4	lb/year	431	2	4	9	
Metal Removed	lb/year	3128	17	30	58	

Golder Associates

Table D4: Alternative 4 Mass Removal of Metals

Standard Mine Superfund Site, Crested Butte, CO

MIW Flow Rate Data						
Peak Flow	gpm	200	200	200	200	Equal to Option 1 Value
Low flow	gpm	10	10	10	10	Equal to Option 1 Value
Average Flow	gpm	30	30	30	30	Equal to Option 1 Value
Peak Flow Duration	days	30	30	30	30	Equal to Option 1 Value
Low Flow Duration	days	244	244	244	244	Equal to Option 1 Value
Average Flow duration	days	91	91	91	91	365 days/year - other flow durations
Zinc Concentrations						
		Zinc	**Cadmium**	**Copper**	**Lead**	
Influent	mg/L	26.5	**0.14**	**0.26**	**0.502**	Average of winter 08 - 09 influent concentrations, total Zn
BCR Effluent	mg/L	0.3	**0.000065**	**0.0013**	**0.0019**	BCR Effluent concentration from mixing study
Mixing Basin effluent Zi	mg/L		**0.00055**	**0.0013**	**0.0030**	mixing study report table 4
Design Parameters						
		Zinc	**Cadmium**	**Copper**	**Lead**	
BCR Max flow	gpm	**125**	**125**	**125**	**125**	RIFS Design
Mixing Ratio	BCR:MIW	**0.0**	**0.0**	**0.0**	**0.0**	this option Has No Mixing Pond
Mixing Pond Max MIW	gpm	**0**	**0**	**0**	**0**	this option Has No Mixing Pond
Note- Assume that Mixing basin flow only occurs if MIW flow is greater than BCR max flow						
Low Flow Analysis						
		Zinc	**Cadmium**	**Copper**	**Lead**	
m_{MIW}	lb/d	3.18	0.02	0.03	0.06	
m_{BCR}	lb/d	0.040	0.000	0.000	0.000	
C_{BCR}	mg/L	0.330	0.000	0.001	0.002	
Removal	%	98.8%	100.0%	99.5%	99.6%	
Average Flow Analysis						
		Zinc	**Cadmium**	**Copper**	**Lead**	
m_{MIW}	lb/d	9.55	0.05	0.09	0.18	
Q_2	gpm	**0.00**	**1.00**	**2.00**	**3.00**	set to zero, no bypass at this flow rate
m_2	lb/d	0.00	0.00	0.01	0.02	set to zero, no bypass at this flow rate
Q_3	gpm	30.00	30.00	30.00	30.00	
m_3	lb/d	0.12	0.00	0.00	0.00	Set equal to Mbcr, no mixing at this flow rate
m_4	lb/d	0.12	0.00	0.01	0.02	
C_4	mg/L	0.3	0.0	0.0	0.1	
High Flow Analysis						
		Zinc	**Cadmium**	**Copper**	**Lead**	
m_{MIW}	lb/d	64	0	1	1	
Q_2	gpm	75	75	75	75	
m_2	lb/d	24	0	0	0	
Q_3	gpm	125	125	125	125	
m_3	lb/d	0.50	0.00	0.00	0.00	BCR effluent concentration
m_4	lb/d	24	0	0	0	
C_4	mg/L	10.1	0.1	0.1	0.2	
yearly mass removal analysis						
		Zinc	**Cadmium**	**Copper**	**Lead**	
m_{MIW}	lb/year	3559	19	35	67	
m_4	lb/year	752	4	8	15	
Metal Removed	lb/year	2807	15	27	52	

Table D5: Alternative 5 Mass Removal of Metals

Standard Mine Superfund Site, Crested Butte, CO

MIW Flow Rate Data						
Peak Flow	gpm	200	200	200	200	Assumed Value
Low flow	gpm	10	10	10	10	
Average Flow	gpm	30	30	30	30	assumption
Peak Flow Duration	days	30	30	30	30	assumed one month of peak runoff
Low Flow Duration	days	244	244	244	244	Assumed october - April
Average Flow duration	days	91	91	91	91	365 days/year - other flow durations
MIW Concentrations						
		Zinc	**Cadmium**	**Copper**	**Lead**	
Influent Zinc	mg/L	26.5	**0.14**	**0.26**	**0.502**	Average of winter 08 - 09 influent concentrations, total Zn
BCR Effluent Zinc	mg/L	0.33	**0.000065**	**0.0013**	**0.0019**	BCR Effluent concentration from mixing study
Mixing Basin effluent Zinc	mg/L	0.5	**0.00055**	**0.0013**	**0.0030**	mixing study report table 4
Mixing Basin Performance Data						
		Zinc	**Cadmium**	**Copper**	**Lead**	
BCR Max flow	gpm	12	12	12	12	RIFS Design
Mixing Ratio	BCR:MIW	1.5	1.5	1.5	1.5	Value used in PTS Designs for RIFS
Mixing Pond Max MIW Flow	gpm	8	8	8	8	Calculated based on mixing ratio
Note- Assume that Mixing basin flow only occurs if MIW flow is greater than BCR max flow						
Low Flow Analysis						
		Zinc	**Cadmium**	**Copper**	**Lead**	
m_{MIW}	lb/d	3.18	0.02	0.03	0.06	
m_{BCR}	lb/d	0.040	0.000	0.000	0.000	
C_{BCR}	mg/L	0.330	0.000	0.001	0.002	
Removal	%	98.8%	100.0%	99.5%	99.6%	
Average Flow Analysis						
		Zinc	**Cadmium**	**Copper**	**Lead**	
m_{MIW}	lb/d	9.55	0.05	0.09	0.18	
Q_2	gpm	10.00	10.00	10.00	10.00	
m_2	lb/d	3.18	0.02	0.03	0.06	
Q_3	gpm	20.00	20.00	20.00	20.00	
m_3	lb/d	0.12	0.00	0.00	0.00	
m_4	lb/d	3.30	0.02	0.03	0.06	
C_4	mg/L	9.17	0.05	0.09	0.17	
High Flow Analysis						
		Zinc	**Cadmium**	**Copper**	**Lead**	
m_{MIW}	lb/d	64	0	1	1	
Q_2	gpm	180	180	180	180	
m_2	lb/d	57	0	1	1	
Q_3	gpm	20	20	20	20	
m_3	lb/d	0.12	0.00	0.00	0.00	
m_4	lb/d	57	0	1	1	
C_4	mg/L	23.9	0.1	0.2	0.5	
yearly mass removal analysis						
		Zinc	**Cadmium**	**Copper**	**Lead**	
m_{MIW}	lb/year	3559	19	35	67	
m_4	lb/year	2034	11	20	38	
Metal Removed	lb/year	1525	8	15	29	