HMA
environmental

January 17, 1997
Doc No. 023801-1551-1
Job No. 023801-3

DRAFT

State of Nevada
Department of Conservation and Natural Resources
Division of Environmental Protection
333 W. Nye Lane
Carson City, Nevada 89706-0866

Attn: Ms. Catherine R. Pool, P.E.
RCRA Facilities Branch
Bureau of Waste Management

Re: Draft Response to Verbal Comments
US Ecology, Inc. - Beatty, Nevada Facility
Permit No. NEV-HW002
RCRA Part B Renewal Application

Dear Ms. Pool:

HMA Environmental Services, Inc. (HMA), on behalf of US Ecology, Inc., is pleased to provide the attached draft responses to your verbal comments on US Ecology, Inc.'s December 17, 1996, Response to Notice of Deficiency Letter. In accordance with our agreement over the phone, the attached responses are in draft form so that we may discuss and finalize any issues you may identify in your review. We will finalize and forward a submittal after you have given us your concurrence to the responses. Two copies of the attached information is provided for your use, distribution, and approval.

For clarity, we have stated the specific verbal comment in the same order as discussed during the telephone call and provided our response in the same order as presented. As required, additional information concerning specific NOD are included in the responses to these NOD. I trust these responses adequately address you comments and look forward to your technical approval of the responses. If you have any questions pertinent to the content of this submission, please feel free to contact either Zaki Naser at (702) 553-2203 or Gary Horwitch of HMA at (281) 440-5503.

Sincerely,

HMA ENVIRONMENTAL SERVICES, INC.

Robert A. Decker, P.E.
Principal

Gary R. Horwitch, P.E.
President

cc: Zaki Naser — 2 copies
Don Brady — 2 copies
File

14503 Bammel-North Houston Road, Suite 100 ♦ Houston, TX 77014-1146 ♦ Telephone 281.440.5503 ♦ Facsimile 281.444.3376

DRAFT

# ADDITIONAL RESPONSE TO COMMENTS FROM TELEPHONE CONVERSATION WITH CATHERINE POOL ON JANUARY 8, 1997
# US ECOLOGY, INC.
# NEVADA PERMIT NEV-HW002
# RCRA PART B RENEWAL APPLICATION

**Comment Regarding Response 1:** **Include a pseudostatic slope stability analysis for the south slope using buttress of clean fill against 0.5V:1H waste slopes.**

**Additional Response 1:** Attachment 1 to this response includes the pseudostatic and static stability analysis for the south slope for insertion into Enclosure E to Attachment 1 in the original Response. The descriptive text has also been modified for replacement of Enclosure A in Attachment 1 in the original Response.

**Comment Regarding Response 2:** **Include minimum depths of stabilized wedge for north, west and south slopes.**

**Additional Response 2:** Table 4.1 (see Attachment 2) has been revised to include the minimum depths of the stabilized wedge for the north, west, and south slopes. The Revised Table 4.1 is attached for replacement into the original Response Document.

**Comment Regarding Response 23:** **Modify soil materials as needed to obtain FS>1 on veneer stability.**

**Additional Response 23:** The response to Item No. 23 has been revised to include the use of modified soil and related improved soil properties to maintain a minimum Factor of Safety of greater than 1 for veneer stability under pseudostatic loading conditions. The revised Attachment 23 (see Attachment 23) is attached for replacement into the original Response Document.

**Comment Regarding Response 40:** **HELP Model appears to be on a per acre basis, relate this to the actual Cell 12 area. Any effect on the sump and pump capacities?**

**Additional Response 40:** As indicated in the Response to Comment 40, the United States Environmental Protection Agency (USEPA) Hydrologic Evaluation of Landfill Performance (HELP) Model Version 3, developed for the USEPA in September 1994, was used to evaluate the performance of the leachate collection system. The HELP model is a quasi-two-dimensional water routing model. Input data for the HELP model is entered for the design layers

comprising the landfill and grading characteristics of a typical cross-section for the design layers. Worst case conditions (e.g., minimum waste depth and maximum slope length) were used in determining the peak head on the landfill liner system as indicated in the Response to Comment 40.

Since each subcell has a different slope and drainage length, peak heads were determined for each subcell based on the design layers and the typical cross-section of the landfill. Peak head calculations were performed for a unit width of the landfill cross-section.

Computations for the collection sumps (see Response to Comments 44 and 45) were based on the peak daily leachate flow (as determined from the HELP modeling provided in the Response to Comment 40) for each subcell times and the area of the subcell. Therefore, the sump and pump requirements presented in the response document were sized based on the specific area contributing to the collection sump.

**Comment Regarding Response 48:** **Provide a series of calculations which indicate the break through time on the below grade side slopes is equivalent to the break through time for the United States Environmental Protection Agency (USEPA) minimum technology liner system for below grade side slopes.**

**Additional Response 48:** Response 48 provides a series of calculations which present these break through calculations.

**Comment Regarding Response 49:** **Please include the calculations indicating the mtr for the bottom liner includes 36 inches of select compacted soil.**

**Additional Response 49:** A copy of your calculations indicating a 36-inch thick layer of select soil, is required on the bottom portion of the landfill, is included in Attachment 49 to this response. Please insert this attachment in the original Response Document. By submission of the calculations, we are officially revising the MTR to include the 36-inch compacted soil layer will extend a minimum of 3 feet up the below grade side slopes to account for the fluids within the bottom portion of the leachate collection system.

DRAFT

ATTACHMENT 1

# SLOPE STABILITY ANALYSES

## GENERAL

In a typical landfill design, slope stability analyses should be performed for the below grade sideslopes (excavations) and above grade sideslopes (embankments). For the purposes of this response, the below grade slope stability will be evaluated using the basic configurations developed, and submitted in the Cell 12 Design Report, prepared by TRC Environmental Solutions, Inc. and submitted on behalf of US Ecology, March 1996 (TRC Report). Other information used for the soil parameters for this analysis includes the "Report of Geotechnical Investigation for Cell 12," prepared by Grant Environmental, July 14, 1994 (Grant Report).

The slopes were analyzed based on the design configuration, site specific soil properties, hydraulic (ground water) conditions, and loading conditions. The EPA "Guide to Technical Resources for the Design of Land Disposal Facilities," 1988, recommends a minimum factor of safety (FS) of 1.5 for static conditions, if uncertainty of the strength measurements are large and there is no imminent danger to human life or major environmental impact if the slope fails. The NDEP requires that the designs must resist a maximum horizontal acceleration (MHA) of a 90 percent probability of not being exceeded within a 250 year period with a factor of safety of at least 1.0. The MHA for this site is 0.42g.

## DESIGN BASIS

The analysis method used in this evaluation of below grade and above grade sideslopes for Cell 12 utilizes the computer program PCSTABL5M (Purdue University, 1988) which provides a general solution of slope stability by limit equilibrium methods. To perform the analysis, the configuration of the slopes, the anticipated soil properties, and the ground water conditions were determined.

The configuration of the slopes were determined from the proposed design heights and depths from the TRC Report. The configurations used for the below grade configuration analysis were determined at the landfill locations where the greatest excavation depths occurs in Cell 12 for the north, south, east and west slopes. By using these worst case cross-sections conservative results are obtained from the model.

## BELOW GRADE CONFIGURATION STABILITY

The subsurface soil conditions were modeled based on the information previously developed in the Grant Report. After review, the soil parameters and conditions modeled in the Grant Report were used as slightly conservative estimates for the anticipated conditions.

Stability was determined for pseudostatic (seismic) and static conditions. Prior evaluations in the TRC Report indicated that seismic load conditions using a maximum horizontal acceleration (MHA) of 0.42g may not provide a Factor of Safety of 1.0 or greater as required by NDEP regulations. Therefore, the analysis was performed utilizing an increase in cohesion in the Stratum I layer. This increase in cohesion will be obtained by the use of soil stabilization methods. The anticipated methodology will be to excavate the non-cemented Stratum I soils, at a minimum width of 10 feet at the Stratum I and Stratum II interface and sloping upward on at a 2 horizontal to 1

vertical (2H:1V) slope away from the excavation. The excavated soils will then be blended with cement, placed and compacted to achieve a minimum compressive strength of 4000 pounds per square foot (psf) or 28 pounds per square inch (psi) in the stabilized wedge, which relates to 2000 psf cohesive strength.

The below grade pseudostatic stability analysis is included as Enclosure A to this Attachment 1. The figures in Enclosure A depict the slope configurations, the soil parameters used in the analysis, the minimum factor of safety calculated for the configuration using PCSTABL5M, and the failure circle for that factor of safety. The computer generated results are also included in Enclosure A.

The computer generated results of the below grade static stability analysis are included as Enclosure B to Attachment 1. The figures in Enclosure B depict the slope configurations, the soil parameters used in the analysis, the minimum factor of safety calculated for the configuration using PCSTABL5M, and the failure circle for that factor of safety.

## ABOVE GRADE CONFIGURATION STABILITY

Stability of the above grade sideslopes was determined for pseudostatic (seismic) and static conditions. Prior evaluations in the TRC Report indicated that seismic load conditions using a maximum horizontal acceleration (MHA) of 0.42g may not provide a Factor of Safety of 1.0 or greater as required by NDEP regulations. Therefore, the analysis was performed utilizing an increase in cohesion in the Stratum I layer and the use of stabilized material in the starter berm and buttress. This increase in cohesion will be obtained by the use of soil stabilization methods. The anticipated methodology will be to blend excavated soils with cement, place and compact to achieve a minimum compressive strength of 4000 pounds per square foot (psf) or 28 pounds per square inch (psi) in the stabilized wedge, which relates to 2000 psf cohesive strength.

The parameters for the waste used in the TRC Report were not used in this evaluation as they were determined to be too conservative. The waste placed at this site generally consists of 50 percent sludge type material stabilized with up to 15 percent cement, approximately 20 percent is soil materials, and the remainder consists of drums filled with solids, demolition type debris and other solid materials. No free liquids are introduced into the landfill. The parameters chosen for the waste material are a unit weight of 115 pounds per cubic foot (pcf), cohesion of 500 psf and friction angle of 27 degrees. An increase in the cohesion is the only change in parameters from the TRC Report. Enclosure C to Attachment 1 provides several references/studies performed on solidification work which support the use of this conservative value of cohesion.

This stability analysis is for deep seated failure and not for veneer stability of the cover system components. The influence of geomembrane components on the deep seated stability was ignored in this analysis. The stability was evaluated for the case when the landfill cells are completely filled with waste and the final cover systems are in place. The above grade pseudostatic stability analyses are included as Enclosure D to Attachment 1. The figures in Enclosure D depict the slope configurations anticipated, the soil parameters used in the analysis, the minimum factor of safety calculated for the configurations using PCSTABL5M, and the failure circle for that factor of safety. The computer generated results are also included in Enclosure D.

The computer generated results of the above grade static stability analyses are included as Enclosure E to Attachment 1. The figures in Enclosure E depict the slope configurations anticipated, the soil parameters used in the analysis, the minimum factor of safety calculated for the configuration using PCSTABL5M, and the failure circle for that factor of safety.

## SLOPE STABILITY RESULTS

The slope stability analyses were performed to determine the overall minimum factor of safety due to failure of the slope for both static and pseudostatic conditions. The factor of safety was calculated restricting the failure plane that passes through the top and slope so that shallow veneer failures would not obscure the results. The minimum factors of safety, as computed by PCSTABL5M, for each cell is summarized in the following table:

Table 1 Summary of Slope Stability Factors of Safety -- Below Grade Slopes

| Slope | Minimum Factor of Safety | |
|---|---|---|
| | Pseudostatic | Static |
| North | 1.16 | 1.85 |
| West | 1.33 | 2.14 |
| South | 1.56 | 2.51 |
| East | 1.13 | 1.74 |

The factors of safety for the above grade stability for the 3 horizontal to 1 vertical slopes on the north and west sides and for the 2 horizontal to 1 vertical buttressed slopes on the south are 1.10 and 1.05 for pseudostatic loading conditions and 2.64 and 2.44 for the static conditions, respectively.

## SLOPE STABILITY CONCLUSIONS

The results of the slope stability analyses indicate the below grade sideslopes and above grade sideslopes are safe with respect to both pseudostatic and static slope stability. Since conservative soil parameters and worst case slope configurations were input in to the model, the results can be considered representative for any conditions in Cell 12.

DRAFT

ATTACHMENT 2

Revised Table 4.1

RESULTS OF SLOPE STABILITY ANALYSES FOR CELL 12 EXCAVATION
US ECOLOGY -- BEATTY, NEVADA

| Slope | Minimum Factor of Safety | |
|---|---|---|
| | Pseudostatic (FS') | Static (FS) |
| North | 1.16 | 1.85 |
| West | 1.33 | 2.14 |
| South | 1.56 | 2.51 |
| East | 1.13 | 1.74 |

Notes:

1. Pseudostatic analysis performed using maximum horizontal acceleration (MHA) of 0.42g.
2. All analysis performed assuming stabilization of the Stratum I soils:
   a. Minimum 10 foot wide stabilized wedge with a minimum depth of 4 feet, 8 feet and 4 feet on the north, west and south walls, respectively; and
   b. Minimum 40 foot wide and 10 foot deep stabilized layer on east wall.
3. Minimum recommended factor of safety for pseudostatic analysis is 1.0, and for static analysis is 1.5.

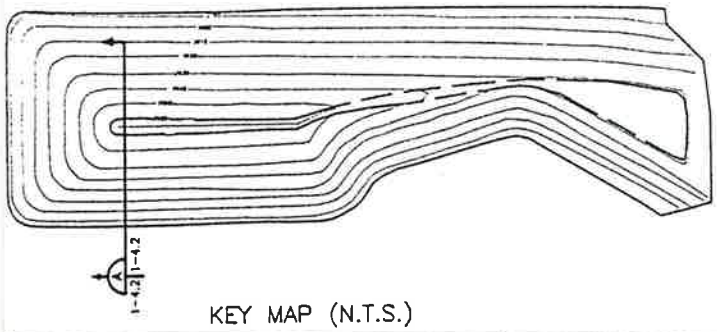


KEY MAP (N.T.S.)

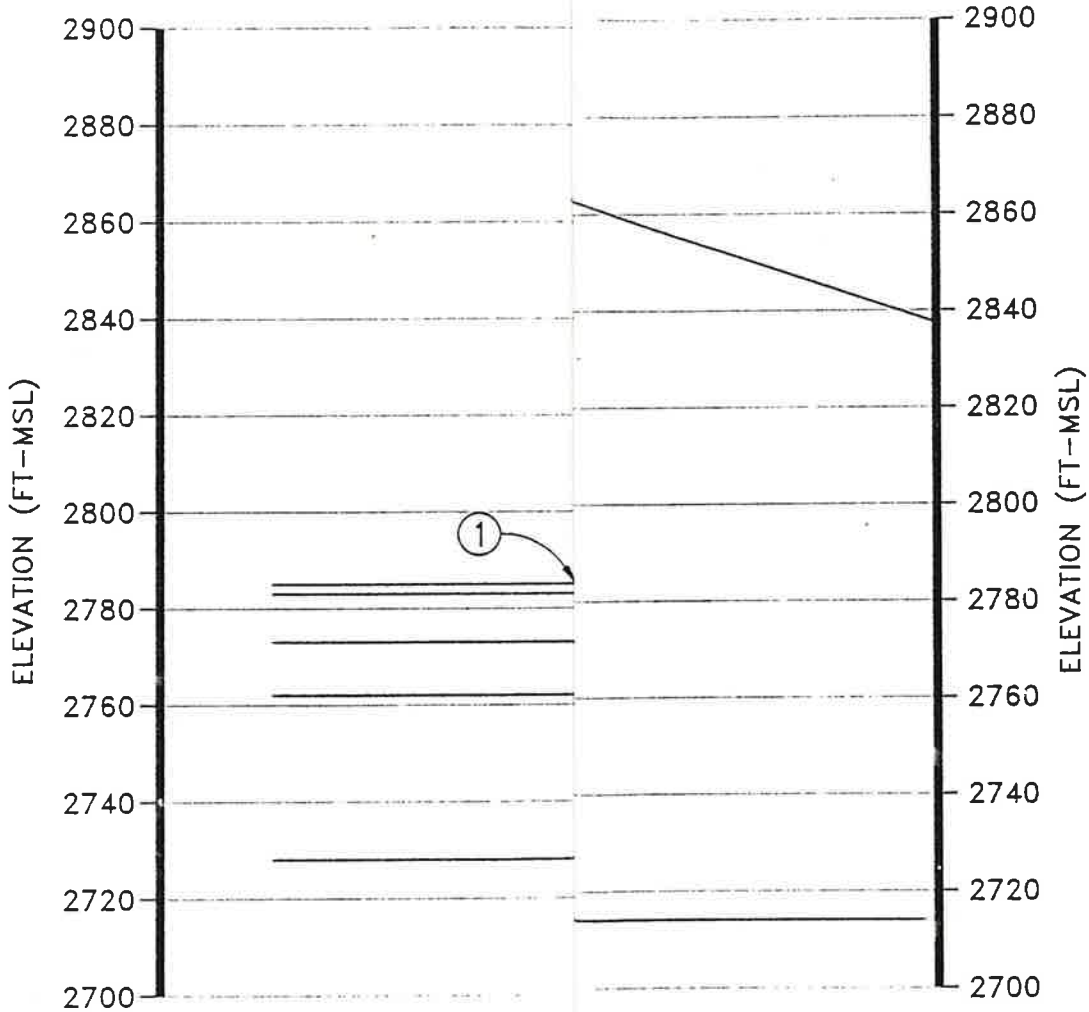


| SOIL TYPE NO. | DESCRIPTION |
|---|---|
| 1 | SILTY SAND, NON-CEMENTED |
| 2 | SAND AND GRAVEL, NON-CEI |
| 3 | SAND AND GRAVEL, CEMENTE |
| 4 | SILTY SAND, PARTIALLY CEME |
| 5 | SILTY SAND, CEMENTED |
| 6 | CLEAN FILL |
| 7 | WASTE |
| 8 | STABILIZED FILL |

Figure
1-4.2

SOUTH WALL
SEISMIC ABOVE GRADE
STABILITY CELL 12

PROJECT NO.: 023801-3
DRAWN BY: JMT 1/97
CHECKED BY: RAD 1/97
SUBMITTED BY: DATE

| REV NO.: | DESCRIPTION | BY | DATE |
|---|---|---|---|
| | | | |

U.S. ECOLOGY
Beatty, Nevada

HMA environmental

HMA Environmental Services, Inc.
Houston, Texas

PLOTTED: Jan 17, 1997 - 10:00:50
3801195

** PCSTABL5M **

by
Purdue University

1

--Slope Stability Analysis--
Simplified Janbu, Simplified Bishop
or Spencer`s Method of Slices

Run Date:
Time of Run:
Run By:
Input Data Filename: ssfinal2.in
Output Filename: ssfinal2.out
Unit: eng
Plotted Output Filename: ssfinal2.plt

PROBLEM DESCRIPTION FINAL SOUTH SLOPE 2H:1V Buttress on 0.5H
:1V Waste Slope SEISMIC A.E.C. BEATTY

BOUNDARY COORDINATES

6 Top Boundaries
20 Total Boundaries

| Boundary No. | X-Left (ft,m) | Y-Left (ft,m) | X-Right (ft,m) | Y-Right (ft,m) | Soil Type Below Bnd |
|---|---|---|---|---|---|
| 1 | .00 | 2785.00 | 100.00 | 2785.00 | 1 |
| 2 | 100.00 | 2785.00 | 200.00 | 2835.00 | 6 |
| 3 | 200.00 | 2835.00 | 206.00 | 2837.00 | 8 |
| 4 | 206.00 | 2837.00 | 290.00 | 2865.00 | 7 |
| 5 | 290.00 | 2865.00 | 310.00 | 2865.00 | 7 |
| 6 | 310.00 | 2865.00 | 400.00 | 2835.00 | 7 |
| 7 | 100.00 | 2785.00 | 175.00 | 2785.00 | 1 |
| 8 | 175.00 | 2785.00 | 200.00 | 2835.00 | 8 |
| 9 | 175.00 | 2785.00 | 180.00 | 2785.00 | 7 |
| 10 | 180.00 | 2785.00 | 206.00 | 2837.00 | 7 |
| 11 | 175.00 | 2785.00 | 176.00 | 2783.00 | 1 |
| 12 | .00 | 2783.00 | 176.00 | 2783.00 | 2 |
| 13 | 176.00 | 2783.00 | 181.00 | 2773.00 | 2 |
| 14 | .00 | 2773.00 | 181.00 | 2773.00 | 3 |
| 15 | 181.00 | 2773.00 | 186.50 | 2773.00 | 3 |
| 16 | .00 | 2762.00 | 186.50 | 2762.00 | 4 |
| 17 | 186.50 | 2762.00 | 203.50 | 2728.00 | 4 |
| 18 | .00 | 2728.00 | 203.50 | 2728.00 | 5 |
| 19 | 203.50 | 2728.00 | 210.50 | 2714.00 | 5 |
| 20 | 210.50 | 2714.00 | 400.00 | 2714.00 | 5 |

1

ISOTROPIC SOIL PARAMETERS

8 Type(s) of Soil

| Soil Type No. | Total Unit Wt. (pcf,KN/m3) | Saturated Unit Wt. (psf,KPa) | Cohesion Intercept (psf,KPa) | Friction Angle (deg) | Pore Pressure Param. | Pressure Constant (psf,KPa) | Piez. Surface No. |
|---|---|---|---|---|---|---|---|
| 1 | 120.0 | 120.0 | .0 | 35.0 | .00 | .0 | 0 |
| 2 | 120.0 | 120.0 | 1440.0 | 35.0 | .00 | .0 | 0 |
| 3 | 120.0 | 120.0 | 2880.0 | 35.0 | .00 | .0 | 0 |
| 4 | 120.0 | 120.0 | 2160.0 | 35.0 | .00 | .0 | 0 |
| 5 | 120.0 | 120.0 | 4320.0 | 35.0 | .00 | .0 | 0 |
| 6 | 120.0 | 120.0 | 750.0 | 35.0 | .00 | .0 | 0 |
| 7 | 115.0 | 115.0 | 500.0 | 27.0 | .00 | .0 | 0 |
| 8 | 120.0 | 120.0 | 2000.0 | 35.0 | .00 | .0 | 0 |

A Horizontal Earthquake Loading Coefficient
Of .420 Has Been Assigned

A Vertical Earthquake Loading Coefficient
Of .000 Has Been Assigned

Cavitation Pressure = .0 (psf,KPa)

1

A Critical Failure Surface Searching Method, Using A Random
Technique For Generating Circular Surfaces, Has Been Specified.

200 Trial Surfaces Have Been Generated.

10 Surfaces Initiate From Each Of 20 Points Equally Spaced
Along The Ground Surface Between X = 50.00 (ft,m)
and X = 185.00 (ft,m)

Each Surface Terminates Between X = 190.00 (ft,m)
and X = 320.00 (ft,m)

Unless Further Limitations Were Imposed, The Minimum Elevation
At Which A Surface Extends Is Y = .00 (ft,m)

5.00 (ft,m) Line Segments Define Each Trial Failure Surface.

1

Following Are Displayed The Ten Most Critical Of The Trial
Failure Surfaces Examined. They Are Ordered - Most Critical
First.

* * Safety Factors Are Calculated By The Modified Bishop Method * *

Failure Surface Specified By 47 Coordinate Points

| Point No. | X-Surf (ft,m) | Y-Surf (ft,m) |
|---|---|---|
| 1 | 106.84 | 2788.42 |
| 2 | 111.83 | 2788.73 |
| 3 | 116.82 | 2789.09 |
| 4 | 121.80 | 2789.52 |
| 5 | 126.78 | 2790.02 |
| 6 | 131.75 | 2790.58 |
| 7 | 136.71 | 2791.20 |
| 8 | 141.66 | 2791.88 |
| 9 | 146.60 | 2792.63 |
| 10 | 151.54 | 2793.44 |
| 11 | 156.46 | 2794.31 |
| 12 | 161.37 | 2795.24 |
| 13 | 166.27 | 2796.24 |
| 14 | 171.16 | 2797.30 |
| 15 | 176.03 | 2798.42 |
| 16 | 180.89 | 2799.61 |
| 17 | 185.73 | 2800.85 |
| 18 | 190.56 | 2802.16 |
| 19 | 195.37 | 2803.53 |
| 20 | 200.16 | 2804.96 |
| 21 | 204.93 | 2806.45 |
| 22 | 209.68 | 2808.00 |
| 23 | 214.42 | 2809.61 |
| 24 | 219.13 | 2811.28 |
| 25 | 223.82 | 2813.01 |
| 26 | 228.49 | 2814.81 |
| 27 | 233.13 | 2816.66 |
| 28 | 237.75 | 2818.56 |
| 29 | 242.35 | 2820.53 |
| 30 | 246.92 | 2822.56 |
| 31 | 251.47 | 2824.64 |
| 32 | 255.98 | 2826.79 |
| 33 | 260.47 | 2828.99 |
| 34 | 264.94 | 2831.24 |
| 35 | 269.37 | 2833.55 |
| 36 | 273.77 | 2835.92 |
| 37 | 278.15 | 2838.35 |

| | | |
|---|---|---|
| 38 | 282.49 | 2840.83 |
| 39 | 286.80 | 2843.36 |
| 40 | 291.07 | 2845.96 |
| 41 | 295.32 | 2848.60 |
| 42 | 299.53 | 2851.30 |
| 43 | 303.70 | 2854.05 |
| 44 | 307.84 | 2856.85 |
| 45 | 311.94 | 2859.71 |
| 46 | 316.01 | 2862.62 |
| 47 | 316.36 | 2862.88 |

Circle Center At X = 85.5 ; Y = 3180.6 and Radius, 392.8

*** 1.049 ***

Individual data on the 52 slices

| Slice No. | Width (ft,m) | Water Weight (lbs,kg) | Water Force Top (lbs,N) | Water Force Bot (lbs,N) | Tie Force Norm (lbs,N) | Tie Force Tan (lbs,N) | Earthquake Force Hor (lbs,N) | Earthquake Force Ver (lbs,N) | Surcharge Load (lbs,N) |
|---|---|---|---|---|---|---|---|---|---|
| 1 | 5.0 | 656.1 | .0 | .0 | .0 | .0 | 275.5 | .0 | .0 |
| 2 | 5.0 | 1947.2 | .0 | .0 | .0 | .0 | 817.8 | .0 | .0 |
| 3 | 5.0 | 3196.2 | .0 | .0 | .0 | .0 | 1342.4 | .0 | .0 |
| 4 | 5.0 | 4402.6 | .0 | .0 | .0 | .0 | 1849.1 | .0 | .0 |
| 5 | 5.0 | 5565.5 | .0 | .0 | .0 | .0 | 2337.5 | .0 | .0 |
| 6 | 5.0 | 6684.1 | .0 | .0 | .0 | .0 | 2807.3 | .0 | .0 |
| 7 | 5.0 | 7758.6 | .0 | .0 | .0 | .0 | 3258.6 | .0 | .0 |
| 8 | 4.9 | 8787.8 | .0 | .0 | .0 | .0 | 3690.9 | .0 | .0 |
| 9 | 4.9 | 9771.3 | .0 | .0 | .0 | .0 | 4104.0 | .0 | .0 |
| 10 | 4.9 | 10709.2 | .0 | .0 | .0 | .0 | 4497.9 | .0 | .0 |
| 11 | 4.9 | 11600.6 | .0 | .0 | .0 | .0 | 4872.3 | .0 | .0 |
| 12 | 4.9 | 12445.6 | .0 | .0 | .0 | .0 | 5227.1 | .0 | .0 |
| 13 | 4.9 | 13243.5 | .0 | .0 | .0 | .0 | 5562.3 | .0 | .0 |
| 14 | 4.9 | 13994.8 | .0 | .0 | .0 | .0 | 5877.8 | .0 | .0 |
| 15 | 4.9 | 14698.6 | .0 | .0 | .0 | .0 | 6173.4 | .0 | .0 |
| 16 | 1.6 | 5071.9 | .0 | .0 | .0 | .0 | 2130.2 | .0 | .0 |
| 17 | 3.2 | 10283.3 | .0 | .0 | .0 | .0 | 4319.0 | .0 | .0 |
| 18 | 2.5 | 8318.7 | .0 | .0 | .0 | .0 | 3493.9 | .0 | .0 |
| 19 | 2.3 | 7622.9 | .0 | .0 | .0 | .0 | 3201.6 | .0 | .0 |
| 20 | 4.8 | 16331.5 | .0 | .0 | .0 | .0 | 6859.2 | .0 | .0 |
| 21 | 4.6 | 16095.7 | .0 | .0 | .0 | .0 | 6760.2 | .0 | .0 |
| 22 | .2 | 554.1 | .0 | .0 | .0 | .0 | 232.7 | .0 | .0 |
| 23 | 4.8 | 16682.5 | .0 | .0 | .0 | .0 | 7006.7 | .0 | .0 |
| 24 | 1.1 | 3718.7 | .0 | .0 | .0 | .0 | 1561.9 | .0 | .0 |
| 25 | 3.7 | 12800.6 | .0 | .0 | .0 | .0 | 5376.2 | .0 | .0 |
| 26 | 4.7 | 16444.6 | .0 | .0 | .0 | .0 | 6906.7 | .0 | .0 |
| 27 | 4.7 | 16335.5 | .0 | .0 | .0 | .0 | 6860.9 | .0 | .0 |
| 28 | 4.7 | 16187.9 | .0 | .0 | .0 | .0 | 6798.9 | .0 | .0 |
| 29 | 4.7 | 16002.3 | .0 | .0 | .0 | .0 | 6721.0 | .0 | .0 |
| 30 | 4.6 | 15779.4 | .0 | .0 | .0 | .0 | 6627.4 | .0 | .0 |
| 31 | 4.6 | 15519.9 | .0 | .0 | .0 | .0 | 6518.3 | .0 | .0 |
| 32 | 4.6 | 15224.5 | .0 | .0 | .0 | .0 | 6394.3 | .0 | .0 |
| 33 | 4.6 | 14893.4 | .0 | .0 | .0 | .0 | 6255.2 | .0 | .0 |
| 34 | 4.5 | 14528.1 | .0 | .0 | .0 | .0 | 6101.8 | .0 | .0 |
| 35 | 4.5 | 14128.9 | .0 | .0 | .0 | .0 | 5934.2 | .0 | .0 |
| 36 | 4.5 | 13696.9 | .0 | .0 | .0 | .0 | 5752.7 | .0 | .0 |
| 37 | 4.5 | 13232.7 | .0 | .0 | .0 | .0 | 5557.7 | .0 | .0 |
| 38 | 4.4 | 12737.5 | .0 | .0 | .0 | .0 | 5349.8 | .0 | .0 |
| 39 | 4.4 | 12212.1 | .0 | .0 | .0 | .0 | 5129.1 | .0 | .0 |
| 40 | 4.4 | 11657.7 | .0 | .0 | .0 | .0 | 4896.2 | .0 | .0 |
| 41 | 4.3 | 11074.9 | .0 | .0 | .0 | .0 | 4651.5 | .0 | .0 |
| 42 | 4.3 | 10465.0 | .0 | .0 | .0 | .0 | 4395.3 | .0 | .0 |
| 43 | 3.2 | 7417.3 | .0 | .0 | .0 | .0 | 3115.3 | .0 | .0 |
| 44 | 1.1 | 2389.7 | .0 | .0 | .0 | .0 | 1003.7 | .0 | .0 |
| 45 | 4.2 | 8648.6 | .0 | .0 | .0 | .0 | 3632.4 | .0 | .0 |
| 46 | 4.2 | 7286.1 | .0 | .0 | .0 | .0 | 3060.2 | .0 | .0 |
| 47 | 4.2 | 5917.7 | .0 | .0 | .0 | .0 | 2485.5 | .0 | .0 |
| 48 | 4.1 | 4545.2 | .0 | .0 | .0 | .0 | 1909.0 | .0 | .0 |
| 49 | 2.2 | 1836.9 | .0 | .0 | .0 | .0 | 771.5 | .0 | .0 |
| 50 | 1.9 | 1260.7 | .0 | .0 | .0 | .0 | 529.5 | .0 | .0 |
| 51 | 4.1 | 1173.4 | .0 | .0 | .0 | .0 | 492.8 | .0 | .0 |
| 52 | .4 | 7.6 | .0 | .0 | .0 | .0 | 3.2 | .0 | .0 |

Failure Surface Specified By 47 Coordinate Points

| Point No. | X-Surf (ft,m) | Y-Surf (ft,m) |
|---|---|---|

| | | |
|---|---|---|
| 1 | 106.84 | 2788.42 |
| 2 | 111.83 | 2788.82 |
| 3 | 116.81 | 2789.27 |
| 4 | 121.78 | 2789.79 |
| 5 | 126.75 | 2790.35 |
| 6 | 131.71 | 2790.98 |
| 7 | 136.66 | 2791.65 |
| 8 | 141.61 | 2792.39 |
| 9 | 146.55 | 2793.18 |
| 10 | 151.47 | 2794.02 |
| 11 | 156.39 | 2794.93 |
| 12 | 161.30 | 2795.88 |
| 13 | 166.20 | 2796.89 |
| 14 | 171.08 | 2797.96 |
| 15 | 175.95 | 2799.08 |
| 16 | 180.81 | 2800.26 |
| 17 | 185.66 | 2801.49 |
| 18 | 190.49 | 2802.78 |
| 19 | 195.31 | 2804.12 |
| 20 | 200.11 | 2805.51 |
| 21 | 204.89 | 2806.96 |
| 22 | 209.66 | 2808.46 |
| 23 | 214.41 | 2810.02 |
| 24 | 219.15 | 2811.63 |
| 25 | 223.86 | 2813.29 |
| 26 | 228.56 | 2815.01 |
| 27 | 233.24 | 2816.78 |
| 28 | 237.89 | 2818.60 |
| 29 | 242.53 | 2820.47 |
| 30 | 247.14 | 2822.40 |
| 31 | 251.74 | 2824.37 |
| 32 | 256.31 | 2826.40 |
| 33 | 260.85 | 2828.48 |
| 34 | 265.37 | 2830.62 |
| 35 | 269.87 | 2832.80 |
| 36 | 274.35 | 2835.03 |
| 37 | 278.80 | 2837.32 |
| 38 | 283.22 | 2839.65 |
| 39 | 287.61 | 2842.03 |
| 40 | 291.98 | 2844.46 |
| 41 | 296.32 | 2846.95 |
| 42 | 300.63 | 2849.48 |
| 43 | 304.92 | 2852.06 |
| 44 | 309.17 | 2854.68 |
| 45 | 313.40 | 2857.36 |
| 46 | 317.59 | 2860.08 |
| 47 | 319.99 | 2861.67 |

Circle Center At X = 74.0 ; Y = 3230.9 and Radius, 443.7

*** 1.050 ***

1

Failure Surface Specified By 44 Coordinate Points

| Point No. | X-Surf (ft,m) | Y-Surf (ft,m) |
|---|---|---|
| 1 | 113.95 | 2791.97 |
| 2 | 118.87 | 2791.10 |
| 3 | 123.81 | 2790.35 |
| 4 | 128.78 | 2789.74 |
| 5 | 133.75 | 2789.25 |
| 6 | 138.74 | 2788.90 |
| 7 | 143.74 | 2788.67 |
| 8 | 148.73 | 2788.58 |
| 9 | 153.73 | 2788.61 |
| 10 | 158.73 | 2788.78 |
| 11 | 163.72 | 2789.08 |
| 12 | 168.70 | 2789.51 |
| 13 | 173.67 | 2790.07 |
| 14 | 178.63 | 2790.76 |
| 15 | 183.56 | 2791.57 |
| 16 | 188.47 | 2792.52 |
| 17 | 193.35 | 2793.60 |
| 18 | 198.20 | 2794.80 |
| 19 | 203.02 | 2796.13 |
| 20 | 207.81 | 2797.58 |

| | | |
|---|---|---|
| 21 | 212.55 | 2799.16 |
| 22 | 217.25 | 2800.87 |
| 23 | 221.91 | 2802.69 |
| 24 | 226.51 | 2804.64 |
| 25 | 231.06 | 2806.71 |
| 26 | 235.56 | 2808.89 |
| 27 | 240.00 | 2811.20 |
| 28 | 244.38 | 2813.61 |
| 29 | 248.69 | 2816.14 |
| 30 | 252.93 | 2818.79 |
| 31 | 257.11 | 2821.54 |
| 32 | 261.21 | 2824.40 |
| 33 | 265.23 | 2827.37 |
| 34 | 269.17 | 2830.45 |
| 35 | 273.04 | 2833.62 |
| 36 | 276.81 | 2836.89 |
| 37 | 280.51 | 2840.27 |
| 38 | 284.11 | 2843.74 |
| 39 | 287.62 | 2847.30 |
| 40 | 291.03 | 2850.95 |
| 41 | 294.35 | 2854.69 |
| 42 | 297.57 | 2858.51 |
| 43 | 300.69 | 2862.42 |
| 44 | 302.64 | 2865.00 |

Circle Center At X = 149.8 ; Y = 2979.5 and Radius, 191.0

*** 1.065 ***

Failure Surface Specified By 43 Coordinate Points

| Point No. | X-Surf (ft,m) | Y-Surf (ft,m) |
|---|---|---|
| 1 | 121.05 | 2795.53 |
| 2 | 126.05 | 2795.54 |
| 3 | 131.05 | 2795.64 |
| 4 | 136.05 | 2795.82 |
| 5 | 141.04 | 2796.08 |
| 6 | 146.03 | 2796.43 |
| 7 | 151.01 | 2796.86 |
| 8 | 155.98 | 2797.37 |
| 9 | 160.95 | 2797.97 |
| 10 | 165.90 | 2798.65 |
| 11 | 170.84 | 2799.41 |
| 12 | 175.77 | 2800.25 |
| 13 | 180.69 | 2801.18 |
| 14 | 185.58 | 2802.18 |
| 15 | 190.46 | 2803.27 |
| 16 | 195.33 | 2804.44 |
| 17 | 200.17 | 2805.69 |
| 18 | 204.99 | 2807.02 |
| 19 | 209.78 | 2808.43 |
| 20 | 214.56 | 2809.93 |
| 21 | 219.30 | 2811.50 |
| 22 | 224.02 | 2813.14 |
| 23 | 228.72 | 2814.87 |
| 24 | 233.38 | 2816.68 |
| 25 | 238.01 | 2818.56 |
| 26 | 242.61 | 2820.52 |
| 27 | 247.18 | 2822.56 |
| 28 | 251.71 | 2824.67 |
| 29 | 256.20 | 2826.86 |
| 30 | 260.66 | 2829.12 |
| 31 | 265.08 | 2831.45 |
| 32 | 269.47 | 2833.86 |
| 33 | 273.81 | 2836.35 |
| 34 | 278.10 | 2838.90 |
| 35 | 282.36 | 2841.52 |
| 36 | 286.57 | 2844.22 |
| 37 | 290.74 | 2846.99 |
| 38 | 294.86 | 2849.82 |
| 39 | 298.93 | 2852.72 |
| 40 | 302.95 | 2855.69 |
| 41 | 306.92 | 2858.73 |
| 42 | 310.84 | 2861.83 |
| 43 | 313.35 | 2863.88 |

Circle Center At X = 122.7 ; Y = 3095.5 and Radius, 300.0

*** 1.067 ***

1

Failure Surface Specified By 41 Coordinate Points

| Point No. | X-Surf (ft,m) | Y-Surf (ft,m) |
|---|---|---|
| 1 | 135.26 | 2802.63 |
| 2 | 140.26 | 2802.39 |
| 3 | 145.26 | 2802.24 |
| 4 | 150.26 | 2802.19 |
| 5 | 155.26 | 2802.22 |
| 6 | 160.25 | 2802.35 |
| 7 | 165.25 | 2802.57 |
| 8 | 170.24 | 2802.89 |
| 9 | 175.22 | 2803.29 |
| 10 | 180.20 | 2803.79 |
| 11 | 185.16 | 2804.38 |
| 12 | 190.12 | 2805.07 |
| 13 | 195.06 | 2805.84 |
| 14 | 199.98 | 2806.70 |
| 15 | 204.89 | 2807.66 |
| 16 | 209.78 | 2808.71 |
| 17 | 214.65 | 2809.85 |
| 18 | 219.49 | 2811.07 |
| 19 | 224.32 | 2812.39 |
| 20 | 229.11 | 2813.79 |
| 21 | 233.89 | 2815.29 |
| 22 | 238.63 | 2816.87 |
| 23 | 243.34 | 2818.54 |
| 24 | 248.02 | 2820.30 |
| 25 | 252.67 | 2822.14 |
| 26 | 257.28 | 2824.07 |
| 27 | 261.86 | 2826.08 |
| 28 | 266.40 | 2828.18 |
| 29 | 270.90 | 2830.36 |
| 30 | 275.36 | 2832.63 |
| 31 | 279.77 | 2834.98 |
| 32 | 284.14 | 2837.40 |
| 33 | 288.47 | 2839.91 |
| 34 | 292.74 | 2842.50 |
| 35 | 296.97 | 2845.17 |
| 36 | 301.15 | 2847.91 |
| 37 | 305.28 | 2850.74 |
| 38 | 309.35 | 2853.63 |
| 39 | 313.37 | 2856.61 |
| 40 | 317.34 | 2859.65 |
| 41 | 319.90 | 2861.70 |

Circle Center At X = 150.8 ; Y = 3072.3 and Radius, 270.1

*** 1.077 ***

Failure Surface Specified By 42 Coordinate Points

| Point No. | X-Surf (ft,m) | Y-Surf (ft,m) |
|---|---|---|
| 1 | 128.16 | 2799.08 |
| 2 | 133.13 | 2799.58 |
| 3 | 138.10 | 2800.14 |
| 4 | 143.06 | 2800.75 |
| 5 | 148.02 | 2801.42 |
| 6 | 152.97 | 2802.14 |
| 7 | 157.91 | 2802.92 |
| 8 | 162.84 | 2803.76 |
| 9 | 167.76 | 2804.65 |
| 10 | 172.67 | 2805.59 |
| 11 | 177.56 | 2806.59 |
| 12 | 182.45 | 2807.65 |
| 13 | 187.33 | 2808.76 |
| 14 | 192.19 | 2809.92 |

| | | |
|---|---|---|
| 15 | 197.04 | 2811.14 |
| 16 | 201.87 | 2812.41 |
| 17 | 206.70 | 2813.74 |
| 18 | 211.50 | 2815.12 |
| 19 | 216.29 | 2816.55 |
| 20 | 221.06 | 2818.04 |
| 21 | 225.82 | 2819.58 |
| 22 | 230.56 | 2821.18 |
| 23 | 235.28 | 2822.82 |
| 24 | 239.98 | 2824.52 |
| 25 | 244.67 | 2826.28 |
| 26 | 249.33 | 2828.08 |
| 27 | 253.97 | 2829.94 |
| 28 | 258.59 | 2831.85 |
| 29 | 263.19 | 2833.81 |
| 30 | 267.77 | 2835.82 |
| 31 | 272.32 | 2837.89 |
| 32 | 276.85 | 2840.00 |
| 33 | 281.36 | 2842.17 |
| 34 | 285.84 | 2844.38 |
| 35 | 290.30 | 2846.65 |
| 36 | 294.73 | 2848.96 |
| 37 | 299.14 | 2851.33 |
| 38 | 303.52 | 2853.74 |
| 39 | 307.87 | 2856.20 |
| 40 | 312.19 | 2858.72 |
| 41 | 316.49 | 2861.28 |
| 42 | 318.14 | 2862.29 |

Circle Center At X = 85.9 ; Y = 3243.2 and Radius, 446.1

*** 1.124 ***

1

Failure Surface Specified By 41 Coordinate Points

| Point No. | X-Surf (ft,m) | Y-Surf (ft,m) |
|---|---|---|
| 1 | 142.37 | 2806.18 |
| 2 | 147.12 | 2804.62 |
| 3 | 151.91 | 2803.20 |
| 4 | 156.75 | 2801.94 |
| 5 | 161.63 | 2800.84 |
| 6 | 166.54 | 2799.89 |
| 7 | 171.47 | 2799.10 |
| 8 | 176.43 | 2798.47 |
| 9 | 181.41 | 2797.99 |
| 10 | 186.40 | 2797.68 |
| 11 | 191.40 | 2797.52 |
| 12 | 196.40 | 2797.53 |
| 13 | 201.40 | 2797.69 |
| 14 | 206.39 | 2798.02 |
| 15 | 211.36 | 2798.50 |
| 16 | 216.32 | 2799.15 |
| 17 | 221.26 | 2799.95 |
| 18 | 226.16 | 2800.91 |
| 19 | 231.04 | 2802.02 |
| 20 | 235.87 | 2803.29 |
| 21 | 240.67 | 2804.72 |
| 22 | 245.41 | 2806.29 |
| 23 | 250.10 | 2808.02 |
| 24 | 254.74 | 2809.90 |
| 25 | 259.31 | 2811.92 |
| 26 | 263.81 | 2814.09 |
| 27 | 268.25 | 2816.41 |
| 28 | 272.60 | 2818.86 |
| 29 | 276.88 | 2821.45 |
| 30 | 281.07 | 2824.18 |
| 31 | 285.17 | 2827.04 |
| 32 | 289.18 | 2830.03 |
| 33 | 293.09 | 2833.14 |
| 34 | 296.90 | 2836.38 |
| 35 | 300.60 | 2839.74 |
| 36 | 304.20 | 2843.22 |
| 37 | 307.68 | 2846.81 |
| 38 | 311.04 | 2850.51 |
| 39 | 314.29 | 2854.31 |
| 40 | 317.41 | 2858.22 |

41 319.99 2861.67

Circle Center At X = 193.7 ; Y = 2953.8 and Radius, 156.3

*** 1.133 ***

Failure Surface Specified By 38 Coordinate Points

| Point No. | X-Surf (ft,m) | Y-Surf (ft,m) |
|---|---|---|
| 1 | 128.16 | 2799.08 |
| 2 | 133.14 | 2798.64 |
| 3 | 138.13 | 2798.32 |
| 4 | 143.13 | 2798.15 |
| 5 | 148.13 | 2798.10 |
| 6 | 153.12 | 2798.19 |
| 7 | 158.12 | 2798.41 |
| 8 | 163.11 | 2798.76 |
| 9 | 168.08 | 2799.25 |
| 10 | 173.05 | 2799.87 |
| 11 | 177.99 | 2800.62 |
| 12 | 182.91 | 2801.50 |
| 13 | 187.81 | 2802.51 |
| 14 | 192.68 | 2803.65 |
| 15 | 197.51 | 2804.92 |
| 16 | 202.31 | 2806.32 |
| 17 | 207.07 | 2807.84 |
| 18 | 211.79 | 2809.49 |
| 19 | 216.47 | 2811.27 |
| 20 | 221.09 | 2813.17 |
| 21 | 225.67 | 2815.19 |
| 22 | 230.18 | 2817.33 |
| 23 | 234.64 | 2819.59 |
| 24 | 239.04 | 2821.97 |
| 25 | 243.37 | 2824.47 |
| 26 | 247.64 | 2827.08 |
| 27 | 251.83 | 2829.80 |
| 28 | 255.95 | 2832.64 |
| 29 | 259.99 | 2835.58 |
| 30 | 263.96 | 2838.62 |
| 31 | 267.84 | 2841.78 |
| 32 | 271.64 | 2845.03 |
| 33 | 275.34 | 2848.38 |
| 34 | 278.96 | 2851.84 |
| 35 | 282.49 | 2855.38 |
| 36 | 285.92 | 2859.02 |
| 37 | 289.25 | 2862.75 |
| 38 | 291.15 | 2865.00 |

Circle Center At X = 147.3 ; Y = 2986.1 and Radius, 188.0

*** 1.135 ***

Failure Surface Specified By 58 Coordinate Points

| Point No. | X-Surf (ft,m) | Y-Surf (ft,m) |
|---|---|---|
| 1 | 57.11 | 2785.00 |
| 2 | 61.99 | 2783.95 |
| 3 | 66.90 | 2782.99 |
| 4 | 71.82 | 2782.11 |
| 5 | 76.76 | 2781.32 |
| 6 | 81.71 | 2780.62 |
| 7 | 86.67 | 2780.01 |
| 8 | 91.65 | 2779.48 |
| 9 | 96.63 | 2779.05 |
| 10 | 101.61 | 2778.70 |
| 11 | 106.61 | 2778.44 |
| 12 | 111.61 | 2778.27 |
| 13 | 116.60 | 2778.19 |
| 14 | 121.60 | 2778.20 |

| | | |
|---|---|---|
| 15 | 126.60 | 2778.30 |
| 16 | 131.60 | 2778.49 |
| 17 | 136.59 | 2778.76 |
| 18 | 141.58 | 2779.13 |
| 19 | 146.56 | 2779.58 |
| 20 | 151.53 | 2780.12 |
| 21 | 156.49 | 2780.75 |
| 22 | 161.44 | 2781.47 |
| 23 | 166.37 | 2782.28 |
| 24 | 171.29 | 2783.17 |
| 25 | 176.19 | 2784.15 |
| 26 | 181.08 | 2785.22 |
| 27 | 185.94 | 2786.37 |
| 28 | 190.79 | 2787.62 |
| 29 | 195.61 | 2788.94 |
| 30 | 200.40 | 2790.36 |
| 31 | 205.17 | 2791.85 |
| 32 | 209.92 | 2793.44 |
| 33 | 214.63 | 2795.10 |
| 34 | 219.31 | 2796.85 |
| 35 | 223.97 | 2798.69 |
| 36 | 228.58 | 2800.60 |
| 37 | 233.17 | 2802.60 |
| 38 | 237.71 | 2804.68 |
| 39 | 242.22 | 2806.84 |
| 40 | 246.69 | 2809.08 |
| 41 | 251.12 | 2811.40 |
| 42 | 255.51 | 2813.80 |
| 43 | 259.86 | 2816.27 |
| 44 | 264.16 | 2818.83 |
| 45 | 268.41 | 2821.45 |
| 46 | 272.62 | 2824.16 |
| 47 | 276.77 | 2826.94 |
| 48 | 280.88 | 2829.79 |
| 49 | 284.94 | 2832.71 |
| 50 | 288.94 | 2835.71 |
| 51 | 292.89 | 2838.77 |
| 52 | 296.78 | 2841.91 |
| 53 | 300.62 | 2845.11 |
| 54 | 304.40 | 2848.39 |
| 55 | 308.12 | 2851.73 |
| 56 | 311.78 | 2855.13 |
| 57 | 315.38 | 2858.60 |
| 58 | 318.84 | 2862.05 |

Circle Center At X = 118.6 ; Y = 3059.1 and Radius, 280.9

*** 1.161 ***

Failure Surface Specified By 34 Coordinate Points

| Point No. | X-Surf (ft,m) | Y-Surf (ft,m) |
|---|---|---|
| 1 | 163.68 | 2816.84 |
| 2 | 168.52 | 2815.57 |
| 3 | 173.40 | 2814.47 |
| 4 | 178.31 | 2813.55 |
| 5 | 183.26 | 2812.80 |
| 6 | 188.22 | 2812.23 |
| 7 | 193.21 | 2811.84 |
| 8 | 198.20 | 2811.63 |
| 9 | 203.20 | 2811.60 |
| 10 | 208.20 | 2811.75 |
| 11 | 213.19 | 2812.08 |
| 12 | 218.16 | 2812.59 |
| 13 | 223.12 | 2813.27 |
| 14 | 228.04 | 2814.14 |
| 15 | 232.93 | 2815.18 |
| 16 | 237.78 | 2816.39 |
| 17 | 242.59 | 2817.78 |
| 18 | 247.34 | 2819.34 |
| 19 | 252.03 | 2821.07 |
| 20 | 256.65 | 2822.96 |
| 21 | 261.21 | 2825.03 |
| 22 | 265.69 | 2827.25 |
| 23 | 270.08 | 2829.63 |
| 24 | 274.39 | 2832.17 |
| 25 | 278.60 | 2834.87 |

| | | |
|---|---|---|
| 26 | 282.72 | 2837.71 |
| 27 | 286.72 | 2840.70 |
| 28 | 290.62 | 2843.83 |
| 29 | 294.41 | 2847.10 |
| 30 | 298.07 | 2850.50 |
| 31 | 301.61 | 2854.03 |
| 32 | 305.02 | 2857.69 |
| 33 | 308.30 | 2861.47 |
| 34 | 310.90 | 2864.70 |

Circle Center At X = 201.6 ; Y = 2950.7 and Radius, 139.1

*** 1.181 ***

1

```
        Y       A  X  I  S       F  T

        .00  630.30  1260.60  1890.90  2521.20  3151.50
X     .00 +-------+-------+-------+-------+--**---+
          -                       .*7
          -                       ***
          -                       .*
          -                       **
          -
   630.30 +
          -
          -
          -
          -
          -
A  1260.60 +
          -
          -
          -
          -
          -
X  1890.90 +
          -
          -
          -
          -
          -
I  2521.20 +
          -
          -
          -
          -
          -
S  3151.50 +
          -
          -
          -
          -
          -
  3781.80 +
          -
          -
          -
          -
          -
F  4412.10 +
          -
          -
          -
          -
          -
T  5042.40 +
```

** PCSTABL5M **

by
Purdue University

1

--Slope Stability Analysis--
Simplified Janbu, Simplified Bishop
or Spencer`s Method of Slices

Run Date:
Time of Run:
Run By:
Input Data Filename: ssfinals.in
Output Filename: ssfinals.out
Unit: eng

PROBLEM DESCRIPTION FINAL SOUTH SLOPE 2H:1V Buttress on 0.5H
:1V Waste Slope SEISMIC A.E.C. BEATTY

BOUNDARY COORDINATES

6 Top Boundaries
20 Total Boundaries

| Boundary No. | X-Left (ft,m) | Y-Left (ft,m) | X-Right (ft,m) | Y-Right (ft,m) | Soil Type Below Bnd |
|---|---|---|---|---|---|
| 1 | .00 | 2785.00 | 100.00 | 2785.00 | 1 |
| 2 | 100.00 | 2785.00 | 200.00 | 2835.00 | 6 |
| 3 | 200.00 | 2835.00 | 206.00 | 2837.00 | 8 |
| 4 | 206.00 | 2837.00 | 290.00 | 2865.00 | 7 |
| 5 | 290.00 | 2865.00 | 310.00 | 2865.00 | 7 |
| 6 | 310.00 | 2865.00 | 400.00 | 2835.00 | 7 |
| 7 | 100.00 | 2785.00 | 175.00 | 2785.00 | 1 |
| 8 | 175.00 | 2785.00 | 200.00 | 2835.00 | 8 |
| 9 | 175.00 | 2785.00 | 180.00 | 2785.00 | 7 |
| 10 | 180.00 | 2785.00 | 206.00 | 2837.00 | 7 |
| 11 | 175.00 | 2785.00 | 176.00 | 2783.00 | 1 |
| 12 | .00 | 2783.00 | 176.00 | 2783.00 | 2 |
| 13 | 176.00 | 2783.00 | 181.00 | 2773.00 | 2 |
| 14 | .00 | 2773.00 | 181.00 | 2773.00 | 3 |
| 15 | 181.00 | 2773.00 | 186.50 | 2773.00 | 3 |
| 16 | .00 | 2762.00 | 186.50 | 2762.00 | 4 |
| 17 | 186.50 | 2762.00 | 203.50 | 2728.00 | 4 |
| 18 | .00 | 2728.00 | 203.50 | 2728.00 | 5 |
| 19 | 203.50 | 2728.00 | 210.50 | 2714.00 | 5 |
| 20 | 210.50 | 2714.00 | 400.00 | 2714.00 | 5 |

1

ISOTROPIC SOIL PARAMETERS

8 Type(s) of Soil

| Soil Type No. | Total Unit Wt. (pcf,KN/m3) | Saturated Unit Wt. (psf,KPa) | Cohesion Intercept (psf,KPa) | Friction Angle (deg) | Pore Pressure Param. | Pressure Constant (psf,KPa) | Piez. Surface No. |
|---|---|---|---|---|---|---|---|
| 1 | 120.0 | 120.0 | .0 | 35.0 | .00 | .0 | 0 |
| 2 | 120.0 | 120.0 | 1440.0 | 35.0 | .00 | .0 | 0 |
| 3 | 120.0 | 120.0 | 2880.0 | 35.0 | .00 | .0 | 0 |
| 4 | 120.0 | 120.0 | 2160.0 | 35.0 | .00 | .0 | 0 |
| 5 | 120.0 | 120.0 | 4320.0 | 35.0 | .00 | .0 | 0 |
| 6 | 120.0 | 120.0 | 750.0 | 35.0 | .00 | .0 | 0 |
| 7 | 115.0 | 115.0 | 500.0 | 27.0 | .00 | .0 | 0 |
| 8 | 120.0 | 120.0 | 2000.0 | 35.0 | .00 | .0 | 0 |

1

A Critical Failure Surface Searching Method, Using A Random
Technique For Generating Circular Surfaces, Has Been Specified.

200 Trial Surfaces Have Been Generated.

10 Surfaces Initiate From Each Of 20 Points Equally Spaced
Along The Ground Surface Between X = 50.00 (ft,m)
and X = 185.00 (ft,m)

Each Surface Terminates Between X = 190.00 (ft,m)
and X = 320.00 (ft,m)

Unless Further Limitations Were Imposed, The Minimum Elevation
At Which A Surface Extends Is Y = .00 (ft,m)

5.00 (ft,m) Line Segments Define Each Trial Failure Surface.

1

Following Are Displayed The Ten Most Critical Of The Trial
Failure Surfaces Examined. They Are Ordered - Most Critical
First.

* * Safety Factors Are Calculated By The Modified Bishop Method * *

Failure Surface Specified By 44 Coordinate Points

| Point No. | X-Surf (ft,m) | Y-Surf (ft,m) |
|---|---|---|
| 1 | 113.95 | 2791.97 |
| 2 | 118.87 | 2791.10 |
| 3 | 123.81 | 2790.35 |
| 4 | 128.78 | 2789.74 |
| 5 | 133.75 | 2789.25 |
| 6 | 138.74 | 2788.90 |
| 7 | 143.74 | 2788.67 |
| 8 | 148.73 | 2788.58 |
| 9 | 153.73 | 2788.61 |
| 10 | 158.73 | 2788.78 |
| 11 | 163.72 | 2789.08 |
| 12 | 168.70 | 2789.51 |
| 13 | 173.67 | 2790.07 |
| 14 | 178.63 | 2790.76 |
| 15 | 183.56 | 2791.57 |
| 16 | 188.47 | 2792.52 |
| 17 | 193.35 | 2793.60 |
| 18 | 198.20 | 2794.80 |
| 19 | 203.02 | 2796.13 |
| 20 | 207.81 | 2797.58 |
| 21 | 212.55 | 2799.16 |
| 22 | 217.25 | 2800.87 |
| 23 | 221.91 | 2802.69 |
| 24 | 226.51 | 2804.64 |
| 25 | 231.06 | 2806.71 |
| 26 | 235.56 | 2808.89 |
| 27 | 240.00 | 2811.20 |
| 28 | 244.38 | 2813.61 |
| 29 | 248.69 | 2816.14 |
| 30 | 252.93 | 2818.79 |
| 31 | 257.11 | 2821.54 |
| 32 | 261.21 | 2824.40 |
| 33 | 265.23 | 2827.37 |
| 34 | 269.17 | 2830.45 |
| 35 | 273.04 | 2833.62 |
| 36 | 276.81 | 2836.89 |
| 37 | 280.51 | 2840.27 |
| 38 | 284.11 | 2843.74 |
| 39 | 287.62 | 2847.30 |
| 40 | 291.03 | 2850.95 |
| 41 | 294.35 | 2854.69 |
| 42 | 297.57 | 2858.51 |
| 43 | 300.69 | 2862.42 |
| 44 | 302.64 | 2865.00 |

Circle Center At X = 149.8 ; Y = 2979.5 and Radius, 191.0

*** 2.368 ***

Individual data on the 48 slices

| Slice No. | Width (ft,m) | Water Force Weight (lbs,kg) | Water Force Top (lbs,N) | Water Force Bot (lbs,N) | Tie Force Norm (lbs,N) | Tie Force Tan (lbs,N) | Earthquake Force Hor (lbs,N) | Earthquake Force Ver (lbs,N) | Surcharge Load (lbs,N) |
|---|---|---|---|---|---|---|---|---|---|
| 1 | 4.9 | 985.5 | .0 | .0 | .0 | .0 | .0 | .0 | .0 |
| 2 | 4.9 | 2934.0 | .0 | .0 | .0 | .0 | .0 | .0 | .0 |
| 3 | 5.0 | 4824.8 | .0 | .0 | .0 | .0 | .0 | .0 | .0 |
| 4 | 5.0 | 6651.4 | .0 | .0 | .0 | .0 | .0 | .0 | .0 |
| 5 | 5.0 | 8408.8 | .0 | .0 | .0 | .0 | .0 | .0 | .0 |
| 6 | 5.0 | 10091.6 | .0 | .0 | .0 | .0 | .0 | .0 | .0 |
| 7 | 5.0 | 11694.7 | .0 | .0 | .0 | .0 | .0 | .0 | .0 |
| 8 | 5.0 | 13213.6 | .0 | .0 | .0 | .0 | .0 | .0 | .0 |
| 9 | 5.0 | 14644.0 | .0 | .0 | .0 | .0 | .0 | .0 | .0 |
| 10 | 5.0 | 15982.2 | .0 | .0 | .0 | .0 | .0 | .0 | .0 |
| 11 | 5.0 | 17224.8 | .0 | .0 | .0 | .0 | .0 | .0 | .0 |
| 12 | 5.0 | 18368.6 | .0 | .0 | .0 | .0 | .0 | .0 | .0 |
| 13 | 4.1 | 16190.3 | .0 | .0 | .0 | .0 | .0 | .0 | .0 |
| 14 | .8 | 3220.9 | .0 | .0 | .0 | .0 | .0 | .0 | .0 |
| 15 | 4.6 | 19104.8 | .0 | .0 | .0 | .0 | .0 | .0 | .0 |
| 16 | .3 | 1245.5 | .0 | .0 | .0 | .0 | .0 | .0 | .0 |
| 17 | 4.9 | 21062.6 | .0 | .0 | .0 | .0 | .0 | .0 | .0 |
| 18 | 4.9 | 21576.5 | .0 | .0 | .0 | .0 | .0 | .0 | .0 |
| 19 | 4.9 | 21990.3 | .0 | .0 | .0 | .0 | .0 | .0 | .0 |
| 20 | 1.8 | 8264.6 | .0 | .0 | .0 | .0 | .0 | .0 | .0 |
| 21 | 3.0 | 13947.8 | .0 | .0 | .0 | .0 | .0 | .0 | .0 |
| 22 | 3.0 | 13703.6 | .0 | .0 | .0 | .0 | .0 | .0 | .0 |
| 23 | 1.8 | 8309.7 | .0 | .0 | .0 | .0 | .0 | .0 | .0 |
| 24 | 4.7 | 21832.2 | .0 | .0 | .0 | .0 | .0 | .0 | .0 |
| 25 | 4.7 | 21598.0 | .0 | .0 | .0 | .0 | .0 | .0 | .0 |
| 26 | 4.7 | 21275.7 | .0 | .0 | .0 | .0 | .0 | .0 | .0 |
| 27 | 4.6 | 20868.2 | .0 | .0 | .0 | .0 | .0 | .0 | .0 |
| 28 | 4.6 | 20378.4 | .0 | .0 | .0 | .0 | .0 | .0 | .0 |
| 29 | 4.5 | 19809.6 | .0 | .0 | .0 | .0 | .0 | .0 | .0 |
| 30 | 4.4 | 19165.5 | .0 | .0 | .0 | .0 | .0 | .0 | .0 |
| 31 | 4.4 | 18450.2 | .0 | .0 | .0 | .0 | .0 | .0 | .0 |
| 32 | 4.3 | 17667.9 | .0 | .0 | .0 | .0 | .0 | .0 | .0 |
| 33 | 4.2 | 16823.5 | .0 | .0 | .0 | .0 | .0 | .0 | .0 |
| 34 | 4.2 | 15921.5 | .0 | .0 | .0 | .0 | .0 | .0 | .0 |
| 35 | 4.1 | 14967.3 | .0 | .0 | .0 | .0 | .0 | .0 | .0 |
| 36 | 4.0 | 13966.5 | .0 | .0 | .0 | .0 | .0 | .0 | .0 |
| 37 | 3.9 | 12924.0 | .0 | .0 | .0 | .0 | .0 | .0 | .0 |
| 38 | 3.9 | 11846.5 | .0 | .0 | .0 | .0 | .0 | .0 | .0 |
| 39 | 3.8 | 10739.7 | .0 | .0 | .0 | .0 | .0 | .0 | .0 |
| 40 | 3.7 | 9609.9 | .0 | .0 | .0 | .0 | .0 | .0 | .0 |
| 41 | 3.6 | 8463.5 | .0 | .0 | .0 | .0 | .0 | .0 | .0 |
| 42 | 3.5 | 7306.9 | .0 | .0 | .0 | .0 | .0 | .0 | .0 |
| 43 | 2.4 | 4394.4 | .0 | .0 | .0 | .0 | .0 | .0 | .0 |
| 44 | 1.0 | 1732.4 | .0 | .0 | .0 | .0 | .0 | .0 | .0 |
| 45 | 3.3 | 4648.7 | .0 | .0 | .0 | .0 | .0 | .0 | .0 |
| 46 | 3.2 | 3109.4 | .0 | .0 | .0 | .0 | .0 | .0 | .0 |
| 47 | 3.1 | 1624.9 | .0 | .0 | .0 | .0 | .0 | .0 | .0 |
| 48 | 1.9 | 288.7 | .0 | .0 | .0 | .0 | .0 | .0 | .0 |

Failure Surface Specified By 47 Coordinate Points

| Point No. | X-Surf (ft,m) | Y-Surf (ft,m) |
|---|---|---|
| 1 | 106.84 | 2788.42 |
| 2 | 111.83 | 2788.73 |
| 3 | 116.82 | 2789.09 |
| 4 | 121.80 | 2789.52 |
| 5 | 126.78 | 2790.02 |
| 6 | 131.75 | 2790.58 |
| 7 | 136.71 | 2791.20 |
| 8 | 141.66 | 2791.88 |
| 9 | 146.60 | 2792.63 |
| 10 | 151.54 | 2793.44 |
| 11 | 156.46 | 2794.31 |
| 12 | 161.37 | 2795.24 |
| 13 | 166.27 | 2796.24 |
| 14 | 171.16 | 2797.30 |
| 15 | 176.03 | 2798.42 |
| 16 | 180.89 | 2799.61 |
| 17 | 185.73 | 2800.85 |

| | | |
|---|---|---|
| 18 | 190.56 | 2802.16 |
| 19 | 195.37 | 2803.53 |
| 20 | 200.16 | 2804.96 |
| 21 | 204.93 | 2806.45 |
| 22 | 209.68 | 2808.00 |
| 23 | 214.42 | 2809.61 |
| 24 | 219.13 | 2811.28 |
| 25 | 223.82 | 2813.01 |
| 26 | 228.49 | 2814.81 |
| 27 | 233.13 | 2816.66 |
| 28 | 237.75 | 2818.56 |
| 29 | 242.35 | 2820.53 |
| 30 | 246.92 | 2822.56 |
| 31 | 251.47 | 2824.64 |
| 32 | 255.98 | 2826.79 |
| 33 | 260.47 | 2828.99 |
| 34 | 264.94 | 2831.24 |
| 35 | 269.37 | 2833.55 |
| 36 | 273.77 | 2835.92 |
| 37 | 278.15 | 2838.35 |
| 38 | 282.49 | 2840.83 |
| 39 | 286.80 | 2843.36 |
| 40 | 291.07 | 2845.96 |
| 41 | 295.32 | 2848.60 |
| 42 | 299.53 | 2851.30 |
| 43 | 303.70 | 2854.05 |
| 44 | 307.84 | 2856.85 |
| 45 | 311.94 | 2859.71 |
| 46 | 316.01 | 2862.62 |
| 47 | 316.36 | 2862.88 |

Circle Center At X = 85.5 ; Y = 3180.6 and Radius, 392.8

*** 2.438 ***

1

Failure Surface Specified By 43 Coordinate Points

| Point No. | X-Surf (ft,m) | Y-Surf (ft,m) |
|---|---|---|
| 1 | 121.05 | 2795.53 |
| 2 | 126.05 | 2795.54 |
| 3 | 131.05 | 2795.64 |
| 4 | 136.05 | 2795.82 |
| 5 | 141.04 | 2796.08 |
| 6 | 146.03 | 2796.43 |
| 7 | 151.01 | 2796.86 |
| 8 | 155.98 | 2797.37 |
| 9 | 160.95 | 2797.97 |
| 10 | 165.90 | 2798.65 |
| 11 | 170.84 | 2799.41 |
| 12 | 175.77 | 2800.25 |
| 13 | 180.69 | 2801.18 |
| 14 | 185.58 | 2802.18 |
| 15 | 190.46 | 2803.27 |
| 16 | 195.33 | 2804.44 |
| 17 | 200.17 | 2805.69 |
| 18 | 204.99 | 2807.02 |
| 19 | 209.78 | 2808.43 |
| 20 | 214.56 | 2809.93 |
| 21 | 219.30 | 2811.50 |
| 22 | 224.02 | 2813.14 |
| 23 | 228.72 | 2814.87 |
| 24 | 233.38 | 2816.68 |
| 25 | 238.01 | 2818.56 |
| 26 | 242.61 | 2820.52 |
| 27 | 247.18 | 2822.56 |
| 28 | 251.71 | 2824.67 |
| 29 | 256.20 | 2826.86 |
| 30 | 260.66 | 2829.12 |
| 31 | 265.08 | 2831.45 |
| 32 | 269.47 | 2833.86 |
| 33 | 273.81 | 2836.35 |
| 34 | 278.10 | 2838.90 |
| 35 | 282.36 | 2841.52 |
| 36 | 286.57 | 2844.22 |
| 37 | 290.74 | 2846.99 |
| 38 | 294.86 | 2849.82 |

| | | |
|---|---|---|
| 39 | 298.93 | 2852.72 |
| 40 | 302.95 | 2855.69 |
| 41 | 306.92 | 2858.73 |
| 42 | 310.84 | 2861.83 |
| 43 | 313.35 | 2863.88 |

Circle Center At X = 122.7 ; Y = 3095.5 and Radius, 300.0

*** 2.474 ***

Failure Surface Specified By 47 Coordinate Points

| Point No. | X-Surf (ft,m) | Y-Surf (ft,m) |
|---|---|---|
| 1 | 106.84 | 2788.42 |
| 2 | 111.83 | 2788.82 |
| 3 | 116.81 | 2789.27 |
| 4 | 121.78 | 2789.79 |
| 5 | 126.75 | 2790.35 |
| 6 | 131.71 | 2790.98 |
| 7 | 136.66 | 2791.65 |
| 8 | 141.61 | 2792.39 |
| 9 | 146.55 | 2793.18 |
| 10 | 151.47 | 2794.02 |
| 11 | 156.39 | 2794.93 |
| 12 | 161.30 | 2795.88 |
| 13 | 166.20 | 2796.89 |
| 14 | 171.08 | 2797.96 |
| 15 | 175.95 | 2799.08 |
| 16 | 180.81 | 2800.26 |
| 17 | 185.66 | 2801.49 |
| 18 | 190.49 | 2802.78 |
| 19 | 195.31 | 2804.12 |
| 20 | 200.11 | 2805.51 |
| 21 | 204.89 | 2806.96 |
| 22 | 209.66 | 2808.46 |
| 23 | 214.41 | 2810.02 |
| 24 | 219.15 | 2811.63 |
| 25 | 223.86 | 2813.29 |
| 26 | 228.56 | 2815.01 |
| 27 | 233.24 | 2816.78 |
| 28 | 237.89 | 2818.60 |
| 29 | 242.53 | 2820.47 |
| 30 | 247.14 | 2822.40 |
| 31 | 251.74 | 2824.37 |
| 32 | 256.31 | 2826.40 |
| 33 | 260.85 | 2828.48 |
| 34 | 265.37 | 2830.62 |
| 35 | 269.87 | 2832.80 |
| 36 | 274.35 | 2835.03 |
| 37 | 278.80 | 2837.32 |
| 38 | 283.22 | 2839.65 |
| 39 | 287.61 | 2842.03 |
| 40 | 291.98 | 2844.46 |
| 41 | 296.32 | 2846.95 |
| 42 | 300.63 | 2849.48 |
| 43 | 304.92 | 2852.06 |
| 44 | 309.17 | 2854.68 |
| 45 | 313.40 | 2857.36 |
| 46 | 317.59 | 2860.08 |
| 47 | 319.99 | 2861.67 |

Circle Center At X = 74.0 ; Y = 3230.9 and Radius, 443.7

*** 2.476 ***

1

Failure Surface Specified By 38 Coordinate Points

| Point No. | X-Surf (ft,m) | Y-Surf (ft,m) |
|---|---|---|
| 1 | 128.16 | 2799.08 |

| | | |
|---|---|---|
| 2 | 133.14 | 2798.64 |
| 3 | 138.13 | 2798.32 |
| 4 | 143.13 | 2798.15 |
| 5 | 148.13 | 2798.10 |
| 6 | 153.12 | 2798.19 |
| 7 | 158.12 | 2798.41 |
| 8 | 163.11 | 2798.76 |
| 9 | 168.08 | 2799.25 |
| 10 | 173.05 | 2799.87 |
| 11 | 177.99 | 2800.62 |
| 12 | 182.91 | 2801.50 |
| 13 | 187.81 | 2802.51 |
| 14 | 192.68 | 2803.65 |
| 15 | 197.51 | 2804.92 |
| 16 | 202.31 | 2806.32 |
| 17 | 207.07 | 2807.84 |
| 18 | 211.79 | 2809.49 |
| 19 | 216.47 | 2811.27 |
| 20 | 221.09 | 2813.17 |
| 21 | 225.67 | 2815.19 |
| 22 | 230.18 | 2817.33 |
| 23 | 234.64 | 2819.59 |
| 24 | 239.04 | 2821.97 |
| 25 | 243.37 | 2824.47 |
| 26 | 247.64 | 2827.08 |
| 27 | 251.83 | 2829.80 |
| 28 | 255.95 | 2832.64 |
| 29 | 259.99 | 2835.58 |
| 30 | 263.96 | 2838.62 |
| 31 | 267.84 | 2841.78 |
| 32 | 271.64 | 2845.03 |
| 33 | 275.34 | 2848.38 |
| 34 | 278.96 | 2851.84 |
| 35 | 282.49 | 2855.38 |
| 36 | 285.92 | 2859.02 |
| 37 | 289.25 | 2862.75 |
| 38 | 291.15 | 2865.00 |

Circle Center At X = 147.3 ; Y = 2986.1 and Radius, 188.0

*** 2.519 ***

Failure Surface Specified By 36 Coordinate Points

| Point No. | X-Surf (ft,m) | Y-Surf (ft,m) |
|---|---|---|
| 1 | 113.95 | 2791.97 |
| 2 | 118.83 | 2790.92 |
| 3 | 123.76 | 2790.04 |
| 4 | 128.71 | 2789.36 |
| 5 | 133.69 | 2788.86 |
| 6 | 138.68 | 2788.54 |
| 7 | 143.67 | 2788.42 |
| 8 | 148.67 | 2788.48 |
| 9 | 153.67 | 2788.73 |
| 10 | 158.65 | 2789.17 |
| 11 | 163.61 | 2789.79 |
| 12 | 168.54 | 2790.60 |
| 13 | 173.44 | 2791.60 |
| 14 | 178.30 | 2792.78 |
| 15 | 183.11 | 2794.14 |
| 16 | 187.87 | 2795.68 |
| 17 | 192.56 | 2797.40 |
| 18 | 197.19 | 2799.30 |
| 19 | 201.74 | 2801.36 |
| 20 | 206.22 | 2803.60 |
| 21 | 210.60 | 2806.00 |
| 22 | 214.89 | 2808.57 |
| 23 | 219.08 | 2811.30 |
| 24 | 223.17 | 2814.18 |
| 25 | 227.14 | 2817.21 |
| 26 | 231.00 | 2820.39 |
| 27 | 234.74 | 2823.71 |
| 28 | 238.35 | 2827.18 |
| 29 | 241.82 | 2830.77 |
| 30 | 245.16 | 2834.49 |
| 31 | 248.35 | 2838.34 |
| 32 | 251.40 | 2842.30 |

| | | |
|---|---|---|
| 33 | 254.30 | 2846.38 |
| 34 | 257.04 | 2850.56 |
| 35 | 259.63 | 2854.84 |
| 36 | 259.65 | 2854.88 |

Circle Center At X = 144.5 ; Y = 2921.4 and Radius, 133.0

*** 2.531 ***

1

Failure Surface Specified By 41 Coordinate Points

| Point No. | X-Surf (ft,m) | Y-Surf (ft,m) |
|---|---|---|
| 1 | 135.26 | 2802.63 |
| 2 | 140.26 | 2802.39 |
| 3 | 145.26 | 2802.24 |
| 4 | 150.26 | 2802.19 |
| 5 | 155.26 | 2802.22 |
| 6 | 160.25 | 2802.35 |
| 7 | 165.25 | 2802.57 |
| 8 | 170.24 | 2802.89 |
| 9 | 175.22 | 2803.29 |
| 10 | 180.20 | 2803.79 |
| 11 | 185.16 | 2804.38 |
| 12 | 190.12 | 2805.07 |
| 13 | 195.06 | 2805.84 |
| 14 | 199.98 | 2806.70 |
| 15 | 204.89 | 2807.66 |
| 16 | 209.78 | 2808.71 |
| 17 | 214.65 | 2809.85 |
| 18 | 219.49 | 2811.07 |
| 19 | 224.32 | 2812.39 |
| 20 | 229.11 | 2813.79 |
| 21 | 233.89 | 2815.29 |
| 22 | 238.63 | 2816.87 |
| 23 | 243.34 | 2818.54 |
| 24 | 248.02 | 2820.30 |
| 25 | 252.67 | 2822.14 |
| 26 | 257.28 | 2824.07 |
| 27 | 261.86 | 2826.08 |
| 28 | 266.40 | 2828.18 |
| 29 | 270.90 | 2830.36 |
| 30 | 275.36 | 2832.63 |
| 31 | 279.77 | 2834.98 |
| 32 | 284.14 | 2837.40 |
| 33 | 288.47 | 2839.91 |
| 34 | 292.74 | 2842.50 |
| 35 | 296.97 | 2845.17 |
| 36 | 301.15 | 2847.91 |
| 37 | 305.28 | 2850.74 |
| 38 | 309.35 | 2853.63 |
| 39 | 313.37 | 2856.61 |
| 40 | 317.34 | 2859.65 |
| 41 | 319.90 | 2861.70 |

Circle Center At X = 150.8 ; Y = 3072.3 and Radius, 270.1

*** 2.591 ***

Failure Surface Specified By 56 Coordinate Points

| Point No. | X-Surf (ft,m) | Y-Surf (ft,m) |
|---|---|---|
| 1 | 64.21 | 2785.00 |
| 2 | 69.03 | 2783.65 |
| 3 | 73.87 | 2782.41 |
| 4 | 78.74 | 2781.28 |
| 5 | 83.63 | 2780.25 |
| 6 | 88.55 | 2779.33 |
| 7 | 93.48 | 2778.51 |
| 8 | 98.43 | 2777.80 |

| | | |
|---|---|---|
| 9 | 103.39 | 2777.21 |
| 10 | 108.37 | 2776.71 |
| 11 | 113.35 | 2776.33 |
| 12 | 118.35 | 2776.06 |
| 13 | 123.34 | 2775.89 |
| 14 | 128.34 | 2775.83 |
| 15 | 133.34 | 2775.88 |
| 16 | 138.34 | 2776.04 |
| 17 | 143.33 | 2776.31 |
| 18 | 148.32 | 2776.69 |
| 19 | 153.30 | 2777.18 |
| 20 | 158.26 | 2777.77 |
| 21 | 163.21 | 2778.47 |
| 22 | 168.15 | 2779.28 |
| 23 | 173.06 | 2780.20 |
| 24 | 177.95 | 2781.22 |
| 25 | 182.83 | 2782.35 |
| 26 | 187.67 | 2783.59 |
| 27 | 192.49 | 2784.93 |
| 28 | 197.27 | 2786.37 |
| 29 | 202.03 | 2787.92 |
| 30 | 206.75 | 2789.57 |
| 31 | 211.43 | 2791.32 |
| 32 | 216.07 | 2793.18 |
| 33 | 220.68 | 2795.13 |
| 34 | 225.23 | 2797.19 |
| 35 | 229.75 | 2799.34 |
| 36 | 234.21 | 2801.60 |
| 37 | 238.62 | 2803.94 |
| 38 | 242.99 | 2806.39 |
| 39 | 247.29 | 2808.93 |
| 40 | 251.55 | 2811.56 |
| 41 | 255.74 | 2814.28 |
| 42 | 259.87 | 2817.09 |
| 43 | 263.94 | 2820.00 |
| 44 | 267.95 | 2822.99 |
| 45 | 271.89 | 2826.06 |
| 46 | 275.76 | 2829.23 |
| 47 | 279.57 | 2832.47 |
| 48 | 283.30 | 2835.80 |
| 49 | 286.96 | 2839.21 |
| 50 | 290.54 | 2842.69 |
| 51 | 294.05 | 2846.26 |
| 52 | 297.48 | 2849.90 |
| 53 | 300.83 | 2853.61 |
| 54 | 304.09 | 2857.40 |
| 55 | 307.28 | 2861.25 |
| 56 | 310.19 | 2864.94 |

Circle Center At X = 128.5 ; Y = 3005.7 and Radius, 229.8

*** 2.621 ***

1

Failure Surface Specified By 58 Coordinate Points

| Point No. | X-Surf (ft,m) | Y-Surf (ft,m) |
|---|---|---|
| 1 | 57.11 | 2785.00 |
| 2 | 61.99 | 2783.95 |
| 3 | 66.90 | 2782.99 |
| 4 | 71.82 | 2782.11 |
| 5 | 76.76 | 2781.32 |
| 6 | 81.71 | 2780.62 |
| 7 | 86.67 | 2780.01 |
| 8 | 91.65 | 2779.48 |
| 9 | 96.63 | 2779.05 |
| 10 | 101.61 | 2778.70 |
| 11 | 106.61 | 2778.44 |
| 12 | 111.61 | 2778.27 |
| 13 | 116.60 | 2778.19 |
| 14 | 121.60 | 2778.20 |
| 15 | 126.60 | 2778.30 |
| 16 | 131.60 | 2778.49 |
| 17 | 136.59 | 2778.76 |
| 18 | 141.58 | 2779.13 |
| 19 | 146.56 | 2779.58 |
| 20 | 151.53 | 2780.12 |

| | | |
|---|---|---|
| 21 | 156.49 | 2780.75 |
| 22 | 161.44 | 2781.47 |
| 23 | 166.37 | 2782.28 |
| 24 | 171.29 | 2783.17 |
| 25 | 176.19 | 2784.15 |
| 26 | 181.08 | 2785.22 |
| 27 | 185.94 | 2786.37 |
| 28 | 190.79 | 2787.62 |
| 29 | 195.61 | 2788.94 |
| 30 | 200.40 | 2790.36 |
| 31 | 205.17 | 2791.85 |
| 32 | 209.92 | 2793.44 |
| 33 | 214.63 | 2795.10 |
| 34 | 219.31 | 2796.85 |
| 35 | 223.97 | 2798.69 |
| 36 | 228.58 | 2800.60 |
| 37 | 233.17 | 2802.60 |
| 38 | 237.71 | 2804.68 |
| 39 | 242.22 | 2806.84 |
| 40 | 246.69 | 2809.08 |
| 41 | 251.12 | 2811.40 |
| 42 | 255.51 | 2813.80 |
| 43 | 259.86 | 2816.27 |
| 44 | 264.16 | 2818.83 |
| 45 | 268.41 | 2821.45 |
| 46 | 272.62 | 2824.16 |
| 47 | 276.77 | 2826.94 |
| 48 | 280.88 | 2829.79 |
| 49 | 284.94 | 2832.71 |
| 50 | 288.94 | 2835.71 |
| 51 | 292.89 | 2838.77 |
| 52 | 296.78 | 2841.91 |
| 53 | 300.62 | 2845.11 |
| 54 | 304.40 | 2848.39 |
| 55 | 308.12 | 2851.73 |
| 56 | 311.78 | 2855.13 |
| 57 | 315.38 | 2858.60 |
| 58 | 318.84 | 2862.05 |

Circle Center At X = 118.6 ; Y = 3059.1 and Radius, 280.9

*** 2.624 ***

Failure Surface Specified By 52 Coordinate Points

| Point No. | X-Surf (ft,m) | Y-Surf (ft,m) |
|---|---|---|
| 1 | 71.32 | 2785.00 |
| 2 | 76.13 | 2783.66 |
| 3 | 80.98 | 2782.44 |
| 4 | 85.86 | 2781.34 |
| 5 | 90.76 | 2780.36 |
| 6 | 95.69 | 2779.51 |
| 7 | 100.64 | 2778.78 |
| 8 | 105.60 | 2778.18 |
| 9 | 110.58 | 2777.71 |
| 10 | 115.57 | 2777.35 |
| 11 | 120.56 | 2777.13 |
| 12 | 125.56 | 2777.03 |
| 13 | 130.56 | 2777.06 |
| 14 | 135.56 | 2777.21 |
| 15 | 140.55 | 2777.49 |
| 16 | 145.53 | 2777.89 |
| 17 | 150.50 | 2778.43 |
| 18 | 155.46 | 2779.08 |
| 19 | 160.40 | 2779.86 |
| 20 | 165.32 | 2780.77 |
| 21 | 170.21 | 2781.79 |
| 22 | 175.08 | 2782.94 |
| 23 | 179.91 | 2784.22 |
| 24 | 184.71 | 2785.61 |
| 25 | 189.48 | 2787.13 |
| 26 | 194.20 | 2788.76 |
| 27 | 198.89 | 2790.52 |
| 28 | 203.52 | 2792.39 |
| 29 | 208.11 | 2794.38 |
| 30 | 212.65 | 2796.48 |
| 31 | 217.13 | 2798.69 |

| | | |
|---|---|---|
| 32 | 221.55 | 2801.02 |
| 33 | 225.92 | 2803.46 |
| 34 | 230.22 | 2806.01 |
| 35 | 234.46 | 2808.67 |
| 36 | 238.62 | 2811.43 |
| 37 | 242.72 | 2814.30 |
| 38 | 246.74 | 2817.26 |
| 39 | 250.69 | 2820.33 |
| 40 | 254.56 | 2823.50 |
| 41 | 258.35 | 2826.77 |
| 42 | 262.05 | 2830.12 |
| 43 | 265.67 | 2833.58 |
| 44 | 269.20 | 2837.12 |
| 45 | 272.64 | 2840.75 |
| 46 | 275.99 | 2844.46 |
| 47 | 279.24 | 2848.26 |
| 48 | 282.39 | 2852.14 |
| 49 | 285.45 | 2856.09 |
| 50 | 288.41 | 2860.13 |
| 51 | 291.26 | 2864.23 |
| 52 | 291.77 | 2865.00 |

Circle Center At X = 127.0 ; Y = 2975.3 and Radius, 198.3

*** 2.634 ***

1

```
        Y      A  X  I  S      F  T

        .00  630.30  1260.60  1890.90  2521.20  3151.50
X     .00 +-------+-------+-------+-------+--**---+
          -                       *
          -                      ***
          -                       *
          -                      **
          -
    630.30 +
          -
          -
          -
          -
          -
A  1260.60 +
          -
          -
          -
          -
          -
X  1890.90 +
          -
          -
          -
          -
          -
I  2521.20 +
          -
          -
          -
          -
          -
S  3151.50 +
          -
          -
          -
          -
          -
  3781.80 +
          -
          -
          -
          -
          -
F  4412.10 +
          -
          -
          -
          -
          -
```

T 5042.40 +

DRAFT

ATTACHMENT 23

## I. INTRODUCTION

The purpose of this calculation is to determine the stability of the final cover components for the US Ecology Industrial Hazardous Waste Disposal Facility in Beatty, Nevada under seismic loading conditions. The final cover is designed as a multi-layer final cover system (MLFCS) and is composed of the following components:

- 2 foot low permeability clay foundation layer;
- geosynthetic clay liner (GCL);
- 60 mil high density polyethylene (HDPE) geomembrane;
- Texnet geocomposite drainage netting (Texnet);
- 18 inch protective cover soil layer; and
- 6 inch gravel cover layer.

The stability of the MLFCS under static and seismic loading conditions is dependent on the geometry of the final cover and the interfacial friction properties of adjacent layers. The friction angles and cohesive properties of the materials used have been defined in Section C.2 of the Cell 12 Design manual. The values used for the static loading conditions will be used to determine the factor of safety against failure for the seismic loading condition.

## II. PROCEDURE

The factor of safety against sliding failure for seismical loaded slopes is defined in "Stability of Earth Slopes" by V. H. Huang, 1985, with the following quadratic equation:

$$a_1 \cdot F^2 + a_2 \cdot F + a_3 = 0 \qquad (1)$$

The constants, $a_1$, $a_2$, and $a_3$ are defined as follows:

$$a_1 = a_4 \cdot \sin(\alpha) + k \cdot (a_4 + a_5) \cdot \cos(\alpha) \qquad (2)$$

$$a_2 = -\left[\frac{C}{\gamma \cdot H} \cdot \left(B \cdot \cos(\alpha) + \frac{1}{\sin(\alpha)}\right) + (\cos(\alpha) - k \cdot \sin(\alpha)) \cdot (a_4 + a_5) \cdot \tan(\phi)\right] \qquad (3)$$

$$a_3 = -B \cdot \sin(\alpha) \cdot \tan(\phi) \cdot \left[\frac{C}{\gamma \cdot H} + \left(\frac{a_5 \cdot \tan(\phi)}{B}\right)\right] \qquad (4)$$

where:

$$a_4 = \frac{1}{2} \bullet \left[ \frac{1}{\tan(\alpha)} - \left( 1 - \frac{B \bullet \tan(\alpha)^2}{\tan(\alpha)} \right) \right] \qquad (5)$$

and:

$$a_5 = \frac{1}{2} \bullet (B^2 \tan(\alpha)) \qquad (6)$$

For equations 1 through 6 the following variables are defined:

H = The height of the slope;
B = the length of the base of the buttressing wedge divided by H;
$\alpha$ = the angle of the slope;
C = the cohesion of the interface or internal cohesion;
$\gamma$ = the unit weight of the overlying material;
k = the acceleration due to seismic loading.

After the factors $a_1$ through $a_5$ have been defined the solution for the factor of safety is given by the quadratic formula:

$$F = \frac{-a_2 \pm \sqrt{a_2^2 - 4 \bullet a_1 \bullet a_3}}{2 \bullet a_1} \qquad (7)$$

One of the two solutions to this equation will be trivial.

## III. MATERIAL PROPERTIES

The following material properties are used in the above equations to determine veneer stability:

**Table 1 Summary of MLFCS Material and Interface Properties**

| Interface Number | Material or Interface | Cohesion (psf) | Friction Angle (degrees) |
|---|---|---|---|
| 1 | Soil Cover Layer | 75 | 28 |
| 2 | Soil Cover on Texnet | 100 | 21 |

**Table 1 Summary of MLFCS Material and Interface Properties**

| Interface Number | Material or Interface | Cohesion (psf) | Friction Angle (degrees) |
|---|---|---|---|
| 3 | Texnet on Textured HDPE | 280 | 7 |
| 4 | HDPE on Buffer Soil | 80 | 25 |
| 5 | Buffer Soil Internal | 75 | 28 |
| 6 | Buffer Soil on GCL | 120 | 17 |
| 7 | GCL Internal | 500 | 0 |
| 8 | GCL on Foundation Soil | 80 | 25 |
| 9 | Foundation Soil (Internal) | 150 | 27 |

The calculation was based on the longest final cover slope. Figure 1 depicts the slope configuration analyzed in this calculation.

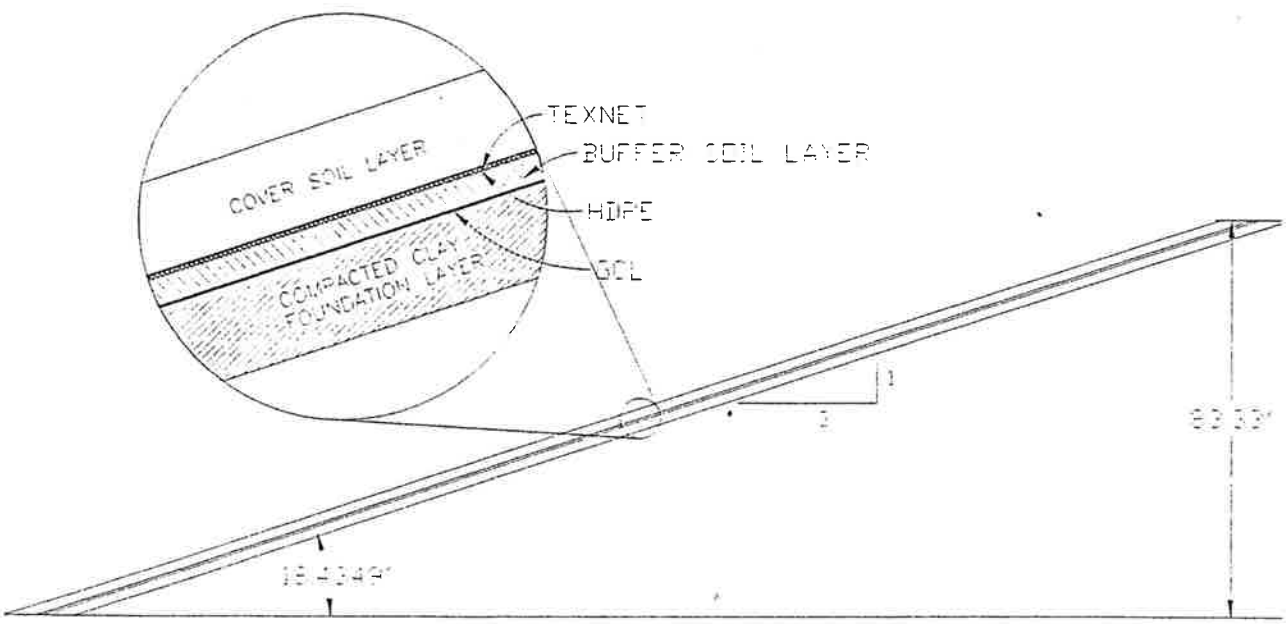


**Figure 1** Typical Above Grade Side Slope Configuration

C:\1rs\proj\beatty\veneer.cal

## IV. SOLUTION

Inserting the values for the Texnet - HDPE Interface and the values for α, H, and B into equations 2 through 6 yields the following solution:

$$B = \frac{t}{H \cdot \sin(\alpha)}$$

Where: t = the thickness of the soil layers above the interface = 2'

therefore:

$$B = \frac{2\,ft.}{83.33\,ft. \cdot \sin(18.43^o)} = 0.076$$

$$a_5 = \frac{(0.076)^2 \cdot \tan(18.43^o)}{2} = 0.0010$$

$$a_4 = \frac{1}{2} \cdot \left[\frac{1}{\tan(18.43^o)} - \left(1 - \frac{(0.076) \cdot \tan(18.43^o)^2}{\tan(18.43^o)}\right)\right] = 0.0749$$

$$a_3 = -(0.076) \cdot \sin(18.43^o) \cdot \tan(7^o) \cdot \left[\frac{(280\,psf)}{(120\,pcf) \cdot (83.33\,ft.)} + \left(\frac{(0.0010) \cdot \tan(7^o)}{0.076}\right)\right] = -0.0001$$

$$a_2 = -\left[\frac{(280\,psf)}{(120\,psf) \cdot (83.33\,ft.)} \cdot \left((0.076) \cdot \cos(18.43^o) + \frac{1}{\sin(18.43^o)}\right) - (\cos(18.43^o) - (0.42) \cdot \sin(18.43^o)) \cdot ((0.0749) + (0.001)) \cdot \tan(7^o)\right] = -0.0434$$

$$a_1 = (0.0749) \cdot \sin(18.43^o) + (0.42) \cdot ((0.0749) + (0.001)) \cdot \cos(18.43^o) = 0.0539$$

Substituting the values for $a_1$, $a_2$ and $a_3$ into the quadratic formula yields:

$$F = \frac{-(-0.0434) \pm \sqrt{(-0.0434)^2 - 4 \cdot (0.0539) \cdot (-0.001)}}{2 \cdot (0.0539)} = 1.82$$

The factor of safety against veneer failure at the Texnet HDPE interface is therefore 1.82. Table 2 summarizes the calculation for the remaining soil interfaces.

**Table 2 SURFICIAL STABILITY (Huang Equation) Psuedo-Static Case with 3:1 Sideslopes**

| | 1 | 2 | 3 | 4 | 5 | 6 | 7 | 8 | 9 |
|---|---|---|---|---|---|---|---|---|---|
| | Soil Cover Layer | Soil - Texnet | Texnet - HDPE | HDPE-Soil | Soil Internal | Soil GCL | GCL Internal | GCL - Select Foundation | Foundation |
| unit weight | 120 | 120 | 120 | 120 | 120 | 120 | 120 | 120 | 120 |
| cohesion | 75 | 100 | 280 | 80 | 75 | 120 | 500 | 80 | 150 |
| phi | 0.4887 | 0.3665 | 0.1222 | 0.4363 | 0.4887 | 0.2967 | 0.0000 | 0.4363 | 0.4712 |
| phi (degrees) | 28 | 21 | 7 | 25 | 28 | 17 | 0 | 25 | 27 |
| Thickness, t | 2.0 | 2.0 | 2.0 | 2.0 | 2.0 | 2.5 | 2.0 | 2.5 | 4.5 |
| Height, H | 83.33 | 83.33 | 83.33 | 83.33 | 83.33 | 83.33 | 83.33 | 83.33 | 83.33 |
| Slope Angle, alpha | 0.3218 | 0.3218 | 0.3218 | 0.3218 | 0.3218 | 0.3218 | 0.3218 | 0.3218 | 0.3218 |
| BH | 6.3246 | 6.3246 | 6.3246 | 6.3246 | 6.3246 | 7.9057 | 6.3246 | 7.9057 | 14.2302 |
| B | 0.0759 | 0.0759 | 0.0759 | 0.0759 | 0.0759 | 0.0949 | 0.0759 | 0.0949 | 0.1708 |
| Acceleration, k | 0.4200 | 0.4200 | 0.4200 | 0.4200 | 0.4200 | 0.4200 | 0.4200 | 0.4200 | 0.4200 |
| a(5) | 0.0010 | 0.0010 | 0.0010 | 0.0010 | 0.0010 | 0.0015 | 0.0010 | 0.0015 | 0.0049 |
| a(4) | 0.0749 | 0.0749 | 0.0749 | 0.0749 | 0.0749 | 0.0749 | 0.0749 | 0.0749 | 0.0749 |
| a4+a5 | 0.0759 | 0.0759 | 0.0759 | 0.0759 | 0.0759 | 0.0764 | 0.0759 | 0.0764 | 0.0798 |
| a(3) | -0.0002 | -0.0001 | -0.0001 | -0.0002 | -0.0002 | -0.0002 | 0.0000 | -0.0002 | -0.0008 |
| a(2) | -0.0572 | -0.0561 | -0.0982 | -0.0547 | -0.0572 | -0.0581 | -0.1617 | -0.0551 | -0.0830 |
| a(1) | 0.0539 | 0.0539 | 0.0539 | 0.0539 | 0.0539 | 0.0542 | 0.0539 | 0.0542 | 0.0555 |
| | | | | | | | | | |
| Factor of Safety | 1.0633 | 1.0428 | 1.8209 | 1.0179 | 1.0633 | 1.0754 | 2.9982 | 1.0214 | 1.5061 |

## V. CONCLUSION

The Factor of safety for each interface in the MLFCS is greater than 1.0 under both static and seismic loading conditions, provided that material property values used for the cohesion and friction angle used in calculating the factor of safety exceed the minimum values defined in Figure 2. The available soils during construction of the MLFCS may vary in material properties. Alternate materials may be used if the combination of friction angle and cohesion yields a factor of safety greater than 1 under siesmic loading conditions. Soils may be amended (i.e. cement stabilization, bentonite admixtures) to achieve the required material characteristics. Figure 2 shows the relationship between the cohesion and friction angle values that yields a factor of safety greater than one with a horizontal acceleration of 0.42 g.

# American Ecology - Beatty NV

## Cohesion and Friction Angle

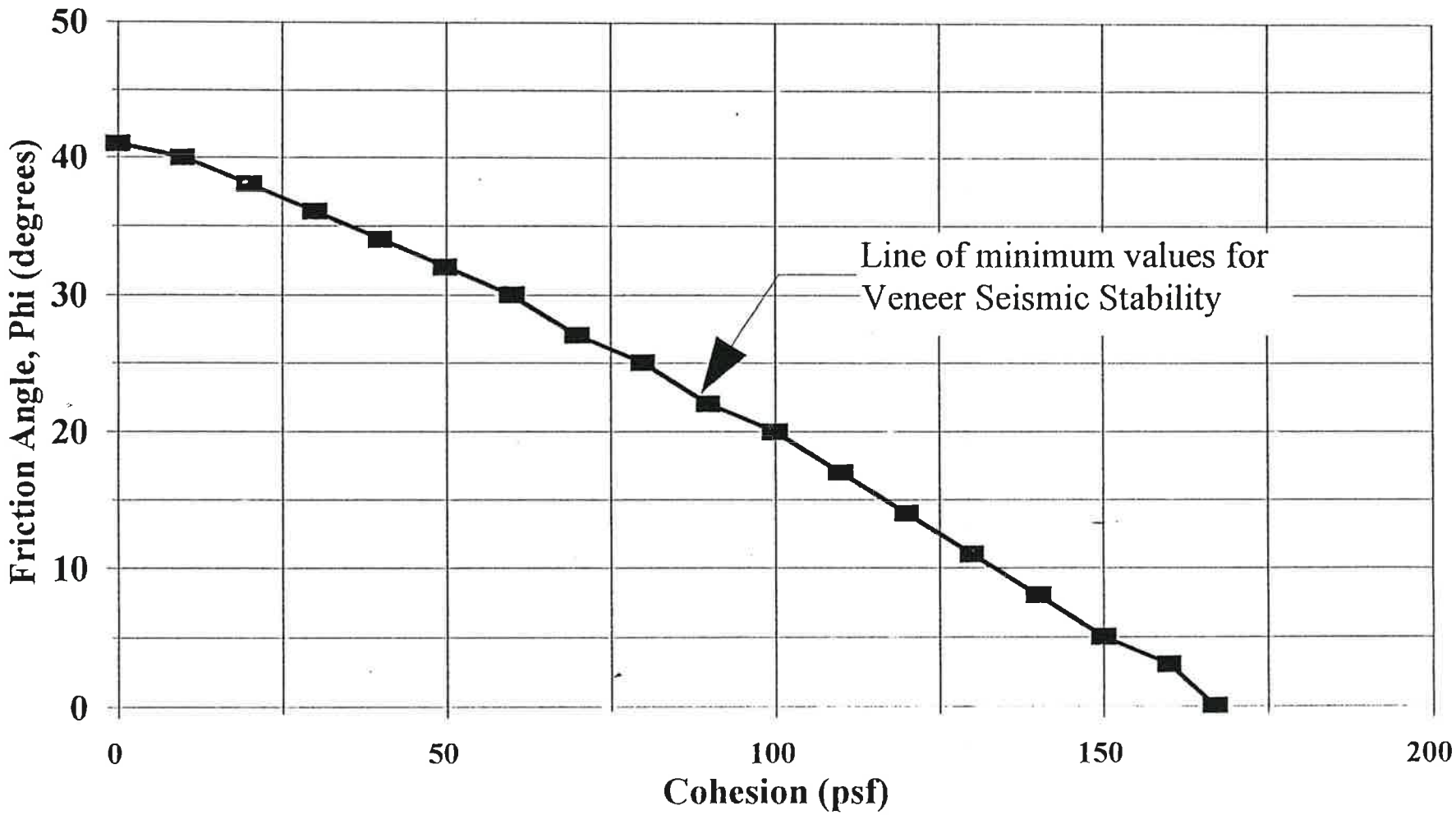


Figure 2

DRAFT

ATTACHMENT 40

THIS RESPONSE IS INTENTIONALLY LEFT BLANK

DRAFT

ATTACHMENT 48

SIDESLOPE BREAKTHROUGH COMPARISON
Cell 12

Prepared By: PRM 1/17/96

| GCL ALTERNATIVE | | | | | 3' CLAY REGULATORY REQUIREMENT | | | | |
|---|---|---|---|---|---|---|---|---|---|
| GCL Thickness | 6 | mm | = | 0.006 meters | Clay Thickness | 3 | ft | = | 0.9144 meters |
| Leachate Head | 7.45E-05 | ft | = | 2.27E-05 meters | Leachate Head | 7.45E-05 | ft | = | 2.27E-05 meters |
| Permeability | 5E-10 | cm/sec | = | 5E-12 m/sec | Permeability | 1E-07 | cm/sec | = | 1E-09 m/sec |
| Velocity | | | = | 5.02E-12 m/sec | Velocity | | | = | 1E-09 m/sec |
| Time (GCL thickness/Velocity) | | | = | 1.2E+09 seconds | Time (Clay thickness/Velocity) | | | = | 9.14E+08 seconds |
| Breakthrough Time | | | = | 37.9 years | Breakthrough Time | | | = | 29.0 years |

Notes:
1. The GCL alternative is based on specifications for Claymax 600SP. Other GCL's with a breakthrough time greater than that of the regulatory requirement may be utilized.
2. GCL thickness from CETCO Regional Manager.

# GEOSYNTHETIC CLAY LINERS

| Product Name | GCL Dimensional Properties: Panel Size Roll Width/Length m/m (ft/ft) | GCL Dimensional Properties: Average Roll Weight kN (lb) | GCL Dimensional Properties: Bentonite Mass/Unit Area Exclusion of Glue Weight kN/m² (lb/ft²) | GCL Hydraulic Properties: Flux at i = 1.0 [1] ASTM D 5084 [2] m/s (cm/sec) | Base Bentonite Properties: Swell Index USP-NF-XVII (min) ml/2g | Base Bentonite Properties: Fluid Loss API-13B (ml) | GCL Structural Components: Upper Geosynthetic: Type or Structure | GCL Structural Components: Upper Geosynthetic: Weight ASTM D 3776 g/m² (oz/yd² | GCL Structural Components: Lower Geosynthetic: Type or Structure | GCL Structural Components: Lower Geosynthetic: Weight ASTM D 3776 or Thickness ASTM D 5199 g/m² or mm (oz/yd² or mil) | GCL Tensile Properties ASTM D 4595 for geotextiles as lower component ASTM D 638 for geomembranes as lower component: Tensile Strength kN/m (lb/in) | GCL Tensile Properties: Tensile Elongation % | Manufacturer's Suggested Applications [3] |
|---|---|---|---|---|---|---|---|---|---|---|---|---|---|
| **Colloid Environmental Technologies Co. (CETCO)** | | | | | | | | | | | | | |
| Claymax 200 R | 4.2/45.7 (13.83/150) | 1044 kg (2300) | 3.7 [4] (0.75) | 5 x 10⁻¹¹ (5 x 10⁻⁹) | 24 | 18 | woven | 108 (3.2) | nonwoven | 203 (6.0) | 13.1 [5] (75) | >10 | LL |
| Claymax 500 SP | 4.2/45.7 (13.83/150) | 1044 kg (2300) | 3.7 [4] (0.75) | 5 x 10⁻¹¹ (5 x 10⁻⁹) | 24 | 18 | woven | 108 (3.2) | woven | 108 (3.2) | 26.3 [5] (150) | >10 | LL |
| Claymax 600 SP | 4.2/45.7 (13.83/150) | 1044 kg (2300) | 3.7 [4] (0.75) | 5 x 10⁻¹¹ (5 x 10⁻⁹) | 24 | 18 | woven | 108 (3.2) | woven/FML composite | 223 (6.6) | 26.3 [5] (150) | >10 | LC, SIC |
| Bentomat ST | 4.6/45.7 (15/150) | 1090 kg (2400) | 3.7 [4] (0.75) | 5 x 10⁻¹¹ (5 x 10⁻⁹) | 24 | 18 | woven | 112 (3.3) | nonwoven | 203 (6.0) | 15.8 [5] (90) | >10 | LL, LC, SIC |
| Bentomat DN | 4.6/45.7 (15/150) | 1112 kg (2450) | 3.7 [4] (0.75) | 5 x 10⁻¹¹ (5 x 10⁻⁹) | 24 | 18 | geotextile | 203 (6.0) | nonwoven | 203 (6.0) | 26.3 [5] (150) | >10 | LL |
| **GSE Lining Technology Inc.** | | | | | | | | | | | | | |
| GSE GundSeal | 5.3 [4]/61 [6] (17.5/200) | 1900 (4200) | 0.048 (1.0) | <4 x 10⁻¹¹ (<4 x 10⁻⁹) | 28 | 18 | none | NA | smooth geomembrane | 0.3–2.0 mm (12–80 mil) | varies w/ GM type | >10 | caps, containment |
| GSE GundSeal Textured | 5.3 [4]/62 [6] (17.5/170) | 1900 (4200) | 0.048 (1.0) | <4 x 10⁻¹¹ (<4 x 10⁻⁹) | 28 | 18 | none | NA | textured geomembrane | 0.75–2.0 mm (30–80 mil) | varies w/ GM type | >10 | caps, containment, slope applications |

DRAFT

ATTACHMENT 49

# CATION EXCHANGE CAPACITY

6/3/96 CEF

$C = CEC\, \rho_d\, L$ Eq. 7.14 ref 1

where: CEC = cation exchange capacity (mass of solute sorbed / unit dry soil)

$\rho_d$ = dry density of site soil

L = thickness of liner

| | | |
|---|---|---|
| Site Soils | CEC = 16-35 MEQ/100 g, $\rho = 108\ lb/ft^3$ | HALK GROUP |
| Clay | CEC = 3-30 MEQ/100 g, $\rho = 108\ lb/ft^3$ | Report of Workshop on GCL's |
| BENTONITE | CEC = 150 MEQ/100 g | " |

then

$$C_{SITE\ SOIL} = 35 \frac{MG\ EQUIV.}{100\,g\ liner\ soil}\left(\frac{g}{1000\,mg}\right)\left(108\frac{lb}{ft^3}\right)\left(\frac{4.53\times10^{-2}\ g/lb}{2.8317\times10^{-2}\ m^3/ft^3}\right)\left(\frac{9''}{12''}\right)^{*}\left(.3048\frac{m}{ft}\right)$$

$$= 138.2\ EQUIV/m^2$$

$$C_{GCL} = \frac{150\ MG\ EQUIV.}{100\ g\ GCL}\left(\frac{g}{1000\,mg}\right)(2.9)\left(\frac{62.4\,lb}{ft^3}\right)\left(\frac{4.53\times10^{-2}\ g/lb}{2.8317\times10^{-2}\ m^3/ft^3}\right)(.007\,m)^{*}$$

$$= 30.39\ EQUIV/m^2\ BENTONITE$$

* Assumed thickness of liner = all bentonite

Specific Gravity $\gamma_{bentonite} = 2.9$ Geotechnical Engineering

① $C_{TOTAL} = C_{SITE\ SOIL} + C_{GCL} = 138.2 + 30.39 = 168.59\ GEQ/G\ liner$

② $$C_{CCL} = \frac{35\ MG\ EQ/g}{100\,g \cdot 1000\,MG}\left(108\frac{lb}{ft^3}\right)\left(\frac{4.53\times10^{-2}\ g/lb}{2.8317\times10^{-2}\ m^3/ft^3}\right)(3')\left(.3048\frac{m}{ft}\right)$$

$$= 552.9\ EQUIV/m^2$$

CALC. ADDITIONAL SITE SOIL NEEDED TO ACHIEVE EQUIVALENCY.

$$C_{NEEDED} = C_{CCL} - (C_{GCL} + C_{SS}) = 552.9 - 168.59 = 384.35 \ \frac{EQ}{m^2}$$

$$\text{Eq 7.14} \quad 384 \frac{MEQ}{g} = \frac{35 \ MEQ \cdot g}{100 g \cdot 1000 \ mg} \left(\frac{108 \ lb}{ft^3}\right) \left(\frac{4.53 \times 10^{-2} \ g/lb}{2.83 \times 10^{-2} \ m^3/ft^3}\right) L$$

$$X = .636 \ m = 2' + 9'' \text{ original}$$

$$= 2'9''$$