AquAeTer

*optimizing environmental resources - water; air; earth*

# CALCULATION SUMMARY SHEET



PROJECT NUMBER: 143418

PROJECT NAME: USEN – Trench 13 Design

DATE: April 4, 2015

CALCULATION NUMBER: C.07 Revision:

**CALCULATION TITLE: Bearing Capacity of Gravel Used to Support LCRS Riser**

**DESCRIPTION OF CALCULATION:**

Using the design of the LCRS Riser, determine the weight of the riser acting on the bearing plate in contact with the supporting gravel and determine if bearing capacity of the gravel is sufficient.

**REFERENCES USED:**

1. Steel Pipe Weights
2. Bearing Capacity of Common Earthen Materials

**REVIEW COMMENTS:**

.

| | | | |
|---|---|---|---|
| CALCULATION MADE BY: | CAB | DATE: | 04/03/15 |
| CALCULATION CHECKED BY: | CWK | DATE: | 05/12/15 |
| CALCULATION REVISED BY: | CAB | DATE: | 05/12/15 |
| CALCULATION REVIEWED BY: | PAZ | DATE: | 06/2/15 |

## PURPOSE OF CALCULATION

Determine if the bearing capacity of gravel in the LCRS sump has sufficient bearing capacity to hold the LCRS riser acting on the bearing plate in contact with the supporting gravel.

## METHOD

Determine the weight of the LCRS riser acting on the bearing plate.

Determine the area of the bearing plate acting on the gravel.

Determine the bearing capacity of the gravel.

## CALCULATION

### Weight of LCRS riser

Based on **Reference 1**, the weight of 12 inch schedule 40 carbon steel pipe is 53.57 pound per foot. The LCRS riser pipe is approximately 74 ft of vertical rise from the edge of slope at the trench crest (2768 ft NAVD88) to the base of the 4 feet LCRS (2694 ft NAVD88).). Assume an addition 5 ft of stickup will be provided, the total vertical distance is 79 feet. At 0.5:1 slope the pipe length is 88 feet. Therefore the total LCRS riser pipe weight is 4,714 pounds.

### Weight of LCRS Riser support

Neglect weight of steel bearing plate and anchor bolts.

Dimensions of concrete support and volume = 2.0 ft x 2.0 ft x 1.5 ft = 6 $ft^3$

Riser pipe set in the riser support = $Area = \pi * (7\ inch)^2$ = 154 $inch^2$ or 1.1 $ft^2$. At 1.5 feet in length, the riser pipe occupies a volume of 1.6 $ft^3$.

The total volume of concrete in the support is 6 $ft^3$ minus 1.6 $ft^3$ or 4.4 $ft^3$. Assuming a concrete density of approximately 145 pounds per $ft^3$, the support will weigh approximately 638 pounds.

### Area of Concrete Acting on Gravel

The base of the concrete is 2.0 ft x 2.0 ft or an area of 4 $ft^2$. The inset pipe has an area determined above of 1.1 $ft^2$. The concrete base acts on the gravel with an area of 4.0 $ft^2$ minus 1.1 $ft^2$ or 2.9 $ft^2$.

### Bearing Capacity of Gravel

The bearing capacity of gravel is estimated at 200 $kN/m^2$ (**Reference 2**) or 4,177 pounds/$ft^2$.

## CALCULATION RESULT

Total weight of the riser pipe and riser support is 4,714 pounds + 638 pounds or approximately 5,352 pounds. This weight acts on an area of the base of the concrete of 2.9 $ft^2$ yielding a pressure of 1,846 pounds per $ft^2$. The bearing capacity of the gravel is estimated at 4,177 pounds per $ft^2$, or about 2.3 greater than the LCRS pipe and support weight. Therefore, the gravel drain rock of the LCRS sump provides sufficient bearing capacity for the weight of the riser pipe and support block.

## Figure 1 Typical Sump Cross Section

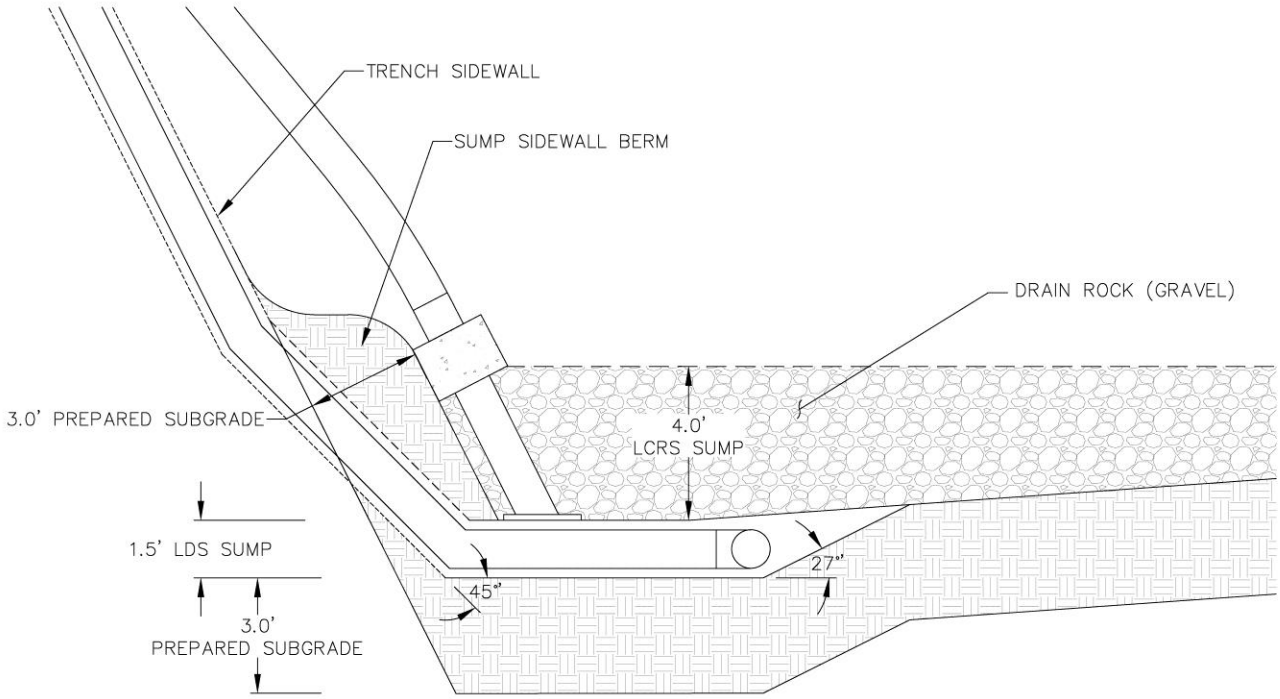


## Figure 2 Riser Support Block Detail

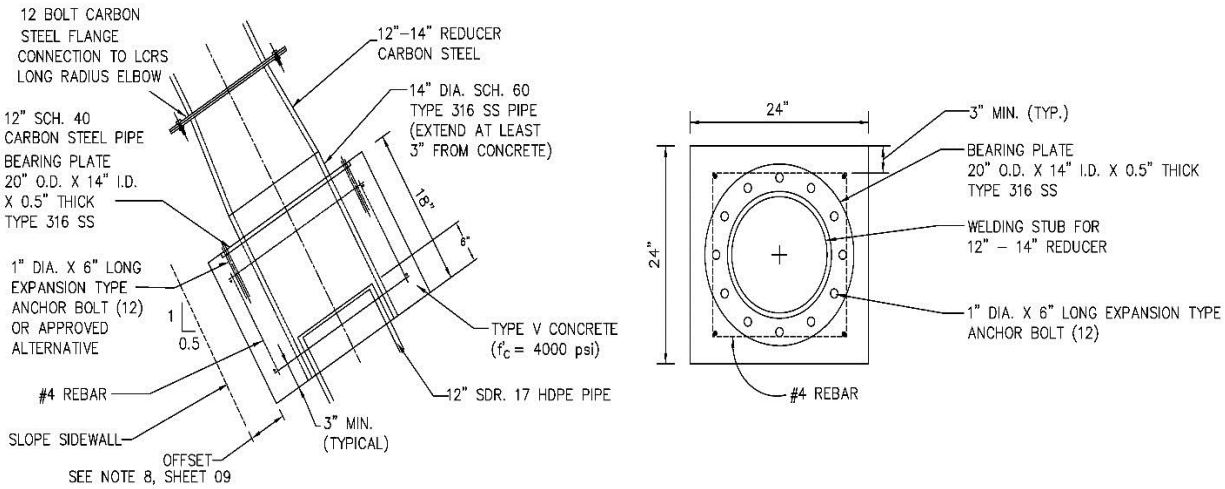

## REFERENCES

**Reference 1: Steel Pipe Weights**

**Reference 2: Bearing Capacity of Common Earthen Materials (downloaded from http://environment.uwe.ac.uk/geocal/foundations/founbear.htm#BEARINGCAPACITY)**

REFERENCE 1

**Philadelphia Regional Center**
2450 Wheatsheaf Lane
Philadelphia, PA 19137
O 215-831-0700
F 215-533-1645
E sales@tiogapipe.com

**Houston Regional Center**
616 FM 1960 W, Suite 700
Houston, TX 77090
O 713-433-2111
F 281-397-0132
E sales@tiogapipe.com

**Chattanooga Regional Center**
1301 Riverfront Parkway, Suite 108
Chattanooga, TN 37402
O 423-899-3398
F 423-899-9695
E sales@tiogapipe.com

# PIPE DIMENSIONS AND WEIGHTS

Available in commercial and nuclear

**U.S./METRIC**

| NOMINAL PIPE SIZE | OD | SCHEDULE DESIGNATIONS | | | WALL THICKNESS | | WEIGHT | | ID | |
|---|---|---|---|---|---|---|---|---|---|---|
| INCH<br>MM | INCH<br>MM | ASME | | | INCH | MM | LBS/ FOOT | KG/ METER | INCH | MM |
| 1/8<br>6 | 0.405<br>10.3 | 10<br>STD<br>XS | 40<br>80 | 10S<br>40S<br>80S | 0.049<br>0.068<br>0.095 | 1.24<br>1.73<br>2.41 | 0.19<br>0.24<br>0.31 | 0.28<br>0.37<br>0.47 | 0.307<br>0.269<br>0.215 | 7.82<br>6.84<br>5.84 |
| 1/4<br>8 | 0.540<br>13.7 | 10<br>STD<br>XS | 40<br>80 | 10S<br>40S<br>80S | 0.065<br>0.088<br>0.119 | 1.65<br>2.24<br>3.02 | 0.33<br>0.43<br>0.54 | 0.49<br>0.63<br>0.80 | 0.410<br>0.364<br>0.302 | 10.40<br>9.22<br>7.66 |
| 3/8<br>10 | 0.675<br>17.1 | 10<br>STD<br>XS | 40<br>80 | 10S<br>40S<br>80S | 0.065<br>0.091<br>0.126 | 1.65<br>2.31<br>3.20 | 0.42<br>0.57<br>0.74 | 0.63<br>0.84<br>1.10 | 0.545<br>0.493<br>0.423 | 13.80<br>12.48<br>10.70 |
| 1/2<br>15 | 0.840<br>21.3 | 5<br>10<br>STD<br>XS<br>160<br>XX | 40<br>80 | 5S<br>10S<br>40S<br>80S | 0.065<br>0.083<br>0.109<br>0.147<br>0.188<br>0.294 | 1.65<br>2.11<br>2.77<br>3.73<br>4.78<br>7.47 | 0.54<br>0.67<br>0.85<br>1.09<br>1.31<br>1.72 | 0.80<br>1.00<br>1.27<br>1.62<br>1.95<br>2.55 | 0.710<br>0.674<br>0.622<br>0.546<br>0.464<br>0.252 | 18.00<br>17.08<br>15.76<br>13.84<br>11.74<br>6.36 |
| 3/4<br>20 | 1.050<br>26.7 | 5<br>10<br>STD<br>XS<br>160<br>XX | 40<br>80 | 5S<br>10S<br>40S<br>80S | 0.065<br>0.083<br>0.113<br>0.154<br>0.219<br>0.308 | 1.65<br>2.11<br>2.87<br>3.91<br>5.56<br>7.82 | 0.69<br>0.86<br>1.13<br>1.48<br>1.95<br>2.44 | 1.03<br>1.28<br>1.69<br>2.20<br>2.90<br>3.64 | 0.920<br>0.884<br>0.824<br>0.742<br>0.612<br>0.434 | 23.40<br>22.48<br>20.96<br>18.88<br>15.58<br>11.06 |
| 1<br>25 | 1.315<br>33.4 | 5<br>10<br>STD<br>XS<br>160<br>XX | 40<br>80 | 5S<br>10S<br>40S<br>80S | 0.065<br>0.109<br>0.133<br>0.179<br>0.250<br>0.358 | 1.65<br>2.77<br>3.38<br>4.55<br>6.35<br>9.09 | 0.87<br>1.41<br>1.68<br>2.17<br>2.85<br>3.66 | 1.29<br>2.09<br>2.50<br>3.24<br>4.24<br>5.45 | 1.185<br>1.097<br>1.049<br>0.957<br>0.815<br>0.599 | 30.10<br>27.86<br>26.64<br>24.30<br>20.70<br>15.22 |
| 1-1/4<br>32 | 1.660<br>42.2 | 5<br>10<br>STD<br>XS<br>160<br>XX | 40<br>80 | 5S<br>10S<br>40S<br>80S | 0.065<br>0.109<br>0.140<br>0.191<br>0.250<br>0.382 | 1.65<br>2.77<br>3.56<br>4.85<br>6.35<br>9.70 | 1.11<br>1.81<br>2.27<br>3.00<br>3.77<br>5.22 | 1.65<br>2.69<br>3.39<br>4.47<br>5.61<br>7.77 | 1.530<br>1.442<br>1.380<br>1.278<br>1.160<br>0.896 | 38.90<br>36.66<br>35.08<br>32.50<br>29.50<br>22.80 |
| 1-1/2<br>40 | 1.900<br>48.3 | 5<br>10<br>STD<br>XS<br>160<br>XX | 40<br>80 | 5S<br>10S<br>40S<br>80S | 0.065<br>0.109<br>0.145<br>0.200<br>0.281<br>0.400 | 1.65<br>2.77<br>3.68<br>5.08<br>7.14<br>10.15 | 1.28<br>2.09<br>2.72<br>3.63<br>4.86<br>6.41 | 1.90<br>3.11<br>4.05<br>5.41<br>7.25<br>9.55 | 1.770<br>1.682<br>1.610<br>1.500<br>1.338<br>1.100 | 45.00<br>42.76<br>40.94<br>38.14<br>34.02<br>28.00 |
| 2<br>50 | 2.375<br>60.3 | 5<br>10<br>STD<br>XS<br>160<br>XX | 40<br>80 | 5S<br>10S<br>40S<br>80S | 0.065<br>0.109<br>0.154<br>0.218<br>0.344<br>0.436 | 1.65<br>2.77<br>3.91<br>5.54<br>8.74<br>11.07 | 1.61<br>2.64<br>3.66<br>5.03<br>7.47<br>9.04 | 2.39<br>3.93<br>5.44<br>7.48<br>11.11<br>13.44 | 2.245<br>2.157<br>2.067<br>1.939<br>1.687<br>1.503 | 57.00<br>54.76<br>52.48<br>49.22<br>42.82<br>38.16 |
| 2-1/2<br>65 | 2.875<br>73.0 | 5<br>10<br>STD<br>XS<br>160<br>XX | 40<br>80 | 5S<br>10S<br>40S<br>80S | 0.083<br>0.120<br>0.203<br>0.276<br>0.375<br>0.552 | 2.11<br>3.05<br>5.16<br>7.01<br>9.53<br>14.02 | 2.48<br>3.53<br>5.80<br>7.67<br>10.02<br>13.71 | 3.69<br>5.26<br>8.63<br>11.41<br>14.92<br>20.39 | 2.709<br>2.635<br>2.469<br>2.323<br>2.125<br>1.771 | 68.78<br>66.90<br>62.68<br>58.98<br>53.94<br>44.96 |
| 3<br>80 | 3.500<br>88.9 | 5<br>10<br>STD<br>XS<br>160<br>XX | 40<br>80 | 5S<br>10S<br>40S<br>80S | 0.083<br>0.120<br>0.216<br>0.300<br>0.438<br>0.600 | 2.11<br>3.05<br>5.49<br>7.62<br>11.13<br>15.24 | 3.03<br>4.34<br>7.58<br>10.26<br>14.34<br>18.60 | 4.52<br>6.46<br>11.29<br>15.27<br>21.35<br>27.68 | 3.334<br>3.260<br>3.068<br>2.900<br>2.624<br>2.300 | 84.68<br>82.80<br>77.92<br>73.66<br>66.64<br>58.42 |
| 3-1/2<br>90 | 4.000<br>101.6 | 5<br>10<br>STD<br>XS<br>XX | 40<br>80 | 5S<br>10S<br>40S<br>80S | 0.083<br>0.120<br>0.226<br>0.318<br>0.636 | 2.11<br>3.05<br>5.74<br>8.08<br>16.15 | 3.48<br>4.98<br>9.12<br>12.52<br>22.87 | 5.18<br>7.41<br>13.57<br>18.64<br>34.03 | 3.834<br>3.760<br>3.548<br>3.364<br>2.728 | 97.38<br>95.50<br>90.12<br>85.44<br>69.30 |
| 4<br>100 | 4.500<br>114.3 | 5<br>10<br><br><br>STD<br>XS<br>120<br>160<br>XX | 40<br>80 | 5S<br>10S<br><br><br>40S<br>80S | 0.083<br>0.120<br>0.156<br>0.188<br>0.237<br>0.337<br>0.438<br>0.531<br>0.674 | 2.11<br>3.05<br>3.96<br>4.78<br>6.02<br>8.56<br>11.13<br>13.49<br>17.12 | 3.92<br>5.62<br>7.24<br>8.67<br>10.80<br>15.00<br>19.02<br>22.53<br>27.57 | 5.84<br>8.37<br>10.78<br>12.91<br>16.08<br>22.32<br>28.32<br>33.54<br>41.03 | 4.334<br>4.260<br>4.188<br>4.124<br>4.026<br>3.826<br>3.624<br>3.438<br>3.152 | 110.08<br>108.20<br>106.38<br>104.74<br>102.26<br>97.18<br>92.04<br>87.32<br>80.06 |
| 4-1/2<br>115 | 5.000<br>127.0 | STD<br>XS<br>XX | 40<br>80 | 40S<br>80S | 0.247<br>0.355<br>0.710 | 6.27<br>9.02<br>18.03 | 12.55<br>17.63<br>32.56 | 18.67<br>26.24<br>48.45 | 4.506<br>4.290<br>3.580 | 114.46<br>108.96<br>90.94 |

| NOMINAL PIPE SIZE | OD | SCHEDULE DESIGNATIONS | | | WALL THICKNESS | | WEIGHT | | ID | |
|---|---|---|---|---|---|---|---|---|---|---|
| INCH<br>MM | INCH<br>MM | ASME | | | INCH | MM | LBS/ FOOT | KG/ METER | INCH | MM |
| 5<br>125 | 5.563<br>141.3 | 5<br>10<br>STD<br>XS<br>120<br>160<br>XX | 40<br>80 | 5S<br>10S<br>40S<br>80S | 0.109<br>0.134<br>0.258<br>0.375<br>0.500<br>0.625<br>0.750 | 2.77<br>3.40<br>6.55<br>9.53<br>12.70<br>15.88<br>19.05 | 6.36<br>7.78<br>14.63<br>20.80<br>27.06<br>32.99<br>38.59 | 9.46<br>11.56<br>21.77<br>30.97<br>40.28<br>49.12<br>57.43 | 5.345<br>5.295<br>5.047<br>4.813<br>4.563<br>4.313<br>4.063 | 135.76<br>134.50<br>128.20<br>122.24<br>115.90<br>109.54<br>103.20 |
| 6<br>150 | 6.625<br>168.3 | 5<br>10<br><br>STD<br>XS<br>120<br>160<br>XX | 40<br>80 | 5S<br>10S<br><br>40S<br>80S | 0.109<br>0.134<br>0.188<br>0.280<br>0.432<br>0.562<br>0.719<br>0.864 | 2.77<br>3.40<br>4.78<br>7.11<br>10.97<br>14.27<br>18.26<br>21.95 | 7.59<br>9.30<br>12.94<br>18.99<br>28.60<br>36.43<br>45.39<br>53.21 | 11.31<br>13.83<br>19.28<br>28.26<br>42.56<br>54.21<br>67.57<br>79.22 | 6.407<br>6.357<br>6.249<br>6.065<br>5.761<br>5.501<br>5.187<br>4.897 | 162.76<br>161.50<br>158.74<br>154.08<br>146.36<br>139.76<br>131.78<br>124.40 |
| 7<br>175 | 7.625<br>193.7 | STD<br>XS<br>XX | 40<br>80 | 40S<br>80S | 0.301<br>0.500<br>0.875 | 7.65<br>12.70<br>22.23 | 23.57<br>38.08<br>63.14 | 35.10<br>56.69<br>94.00 | 7.023<br>6.625<br>5.875 | 178.40<br>168.30<br>149.24 |
| 8<br>200 | 8.625<br>219.1 | <br>10<br>20<br>30<br>STD<br>60<br>XS<br>100<br>120<br>140<br>XX<br>160 | 40<br>80 | 5S<br>10S<br><br><br>40S<br><br>80S | 0.109<br>0.148<br>0.250<br>0.277<br>0.322<br>0.406<br>0.500<br>0.594<br>0.719<br>0.812<br>0.875<br>0.906 | 2.77<br>3.76<br>6.35<br>7.04<br>8.18<br>10.31<br>12.70<br>15.09<br>18.26<br>20.62<br>22.23<br>23.01 | 9.92<br>13.41<br>22.38<br>24.72<br>28.58<br>35.67<br>43.43<br>51.00<br>60.77<br>67.82<br>72.49<br>74.76 | 14.78<br>19.97<br>33.32<br>36.82<br>42.55<br>53.09<br>64.64<br>75.92<br>90.44<br>100.93<br>107.93<br>111.27 | 8.407<br>8.329<br>8.125<br>8.071<br>7.981<br>7.813<br>7.625<br>7.437<br>7.187<br>7.001<br>6.875<br>6.813 | 213.56<br>211.58<br>206.40<br>205.02<br>202.74<br>198.48<br>193.70<br>188.92<br>182.58<br>177.86<br>174.64<br>173.08 |
| 9<br>225 | 9.625<br>244.5 | STD<br>XS<br>XX | 40<br>80 | 40S<br>80S | 0.342<br>0.500<br>0.875 | 8.69<br>12.70<br>22.23 | 33.94<br>48.77<br>81.85 | 50.54<br>72.60<br>121.85 | 8.941<br>8.625<br>7.875 | 227.12<br>219.10<br>200.04 |
| 10<br>250 | 10.750<br>273.0 | <br><br><br>20<br>30<br>STD<br>XS<br>80<br>100<br>120<br>140<br>160 | 40<br>60<br><br><br><br>XX | 5S<br>10S<br><br><br><br>40S<br>80S<br><br><br><br><br> | 0.134<br>0.165<br>0.188<br>0.250<br>0.307<br>0.365<br>0.500<br>0.594<br>0.719<br>0.844<br>1.000<br>1.125 | 3.40<br>4.19<br>4.78<br>6.35<br>7.80<br>9.27<br>12.70<br>15.09<br>18.26<br>21.44<br>25.40<br>28.58 | 15.21<br>18.67<br>21.23<br>28.06<br>34.27<br>40.52<br>54.79<br>64.49<br>77.10<br>89.38<br>104.23<br>115.75 | 22.61<br>27.78<br>31.62<br>41.76<br>51.01<br>60.29<br>81.53<br>95.98<br>114.71<br>133.01<br>155.10<br>172.27 | 10.482<br>10.420<br>10.374<br>10.250<br>10.136<br>10.020<br>9.750<br>9.562<br>9.312<br>9.062<br>8.750<br>8.500 | 266.20<br>264.62<br>263.44<br>260.30<br>257.40<br>254.46<br>247.60<br>242.82<br>236.48<br>230.12<br>222.20<br>215.84 |
| 11<br>275 | 11.750<br>298.5 | STD<br>XS<br>XX | 40<br>80 | 40S<br>80S | 0.375<br>0.500<br>0.875 | 9.53<br>12.70<br>22.23 | 45.60<br>60.13<br>101.72 | 67.91<br>89.51<br>151.46 | 11.000<br>10.750<br>10.000 | 279.44<br>273.10<br>254.04 |
| 12<br>300 | 12.750<br>323.8 | <br><br><br>20<br>30<br>STD<br>40<br>XS<br>60<br>80<br>100<br>120<br>140<br>160 | <br><br><br><br><br>40S<br><br>80S<br><br><br><br>XX<br><br> | 5S<br>10S<br><br><br><br><br><br><br><br><br><br><br><br> | 0.156<br>0.180<br>0.188<br>0.250<br>0.330<br>0.375<br>0.406<br>0.500<br>0.562<br>0.688<br>0.844<br>1.000<br>1.125<br>1.312 | 3.96<br>4.57<br>4.78<br>6.35<br>8.38<br>9.53<br>10.31<br>12.70<br>14.27<br>17.48<br>21.44<br>25.40<br>28.58<br>33.32 | 21.00<br>24.19<br>25.25<br>33.41<br>43.81<br>49.41<br>53.57<br>65.48<br>73.22<br>88.71<br>107.42<br>125.61<br>139.81<br>160.42 | 31.24<br>35.98<br>37.61<br>49.71<br>65.19<br>73.86<br>79.71<br>97.44<br>108.93<br>132.05<br>159.87<br>186.92<br>208.08<br>238.69 | 12.438<br>12.390<br>12.374<br>12.250<br>12.090<br>12.000<br>11.938<br>11.750<br>11.626<br>11.374<br>11.062<br>10.750<br>10.500<br>10.126 | 315.88<br>314.66<br>314.24<br>311.10<br>307.04<br>304.74<br>303.18<br>298.40<br>295.26<br>288.84<br>280.92<br>273.00<br>266.64<br>257.16 |
| 14<br>350 | 14.000<br>355.6 | <br>10<br>20<br>STD<br>40<br>XS<br>60<br>80<br>100<br>120<br>140<br>160 | <br><br><br>30<br><br><br><br><br><br><br><br> | 10S<br><br><br>40S<br><br>80S<br><br><br><br><br><br> | 0.188<br>0.250<br>0.312<br>0.375<br>0.438<br>0.500<br>0.594<br>0.750<br>0.938<br>1.094<br>1.250<br>1.406 | 4.78<br>6.35<br>7.92<br>9.53<br>11.13<br>12.70<br>15.09<br>19.05<br>23.83<br>27.79<br>31.75<br>35.71 | 27.76<br>36.75<br>45.65<br>54.62<br>63.50<br>72.16<br>85.13<br>106.23<br>130.98<br>150.93<br>170.37<br>189.29 | 41.36<br>54.69<br>67.91<br>81.33<br>94.55<br>107.40<br>126.72<br>158.11<br>194.98<br>224.66<br>253.58<br>281.72 | 13.624<br>13.500<br>13.376<br>13.250<br>13.124<br>13.000<br>12.812<br>12.500<br>12.124<br>11.812<br>11.500<br>11.188 | 346.04<br>342.90<br>339.76<br>336.54<br>333.34<br>330.20<br>325.42<br>317.50<br>307.94<br>300.02<br>292.10<br>284.18 |

# REFERENCE 1

| NOMINAL PIPE SIZE | OD | SCHEDULE DESIGNATIONS | WALL THICKNESS | | WEIGHT | | ID | |
|---|---|---|---|---|---|---|---|---|
| INCH MM | INCH MM | ASME | INCH | MM | LBS/ FOOT | KG/ METER | INCH | MM |
| 16 400 | 16.000 406.4 | 10S | 0.188 | 4.78 | 31.78 | 47.34 | 15.624 | 396.84 |
| | | 10 | 0.250 | 6.35 | 42.09 | 62.65 | 15.500 | 393.70 |
| | | 20 | 0.312 | 7.92 | 52.32 | 77.83 | 15.376 | 390.56 |
| | | STD 30 40S | 0.375 | 9.53 | 62.64 | 93.27 | 15.250 | 387.34 |
| | | XS 40 80S | 0.500 | 12.70 | 82.85 | 123.31 | 15.000 | 381.00 |
| | | 60 | 0.656 | 16.66 | 107.60 | 160.13 | 14.688 | 373.08 |
| | | 80 | 0.844 | 21.44 | 136.74 | 203.54 | 14.312 | 363.52 |
| | | 100 | 1.031 | 26.19 | 164.98 | 245.57 | 13.938 | 354.02 |
| | | 120 | 1.219 | 30.96 | 192.61 | 286.66 | 13.562 | 344.48 |
| | | 140 | 1.438 | 36.53 | 223.85 | 333.21 | 13.124 | 333.34 |
| | | 160 | 1.594 | 40.49 | 245.48 | 365.38 | 12.812 | 325.42 |
| 18 450 | 18.000 457 | 10S | 0.188 | 4.78 | 35.80 | 53.31 | 17.624 | 447.44 |
| | | 10 | 0.250 | 6.35 | 47.44 | 70.57 | 17.500 | 444.30 |
| | | 20 | 0.312 | 7.92 | 58.99 | 87.71 | 17.376 | 441.16 |
| | | STD 40S | 0.375 | 9.53 | 70.65 | 105.17 | 17.250 | 437.94 |
| | | 30 | 0.438 | 11.13 | 82.23 | 122.38 | 17.124 | 434.74 |
| | | XS 80S | 0.500 | 12.70 | 93.54 | 139.16 | 17.000 | 431.60 |
| | | 40 | 0.562 | 14.27 | 104.76 | 155.81 | 16.876 | 428.46 |
| | | 60 | 0.750 | 19.05 | 138.30 | 205.75 | 16.500 | 418.90 |
| | | 80 | 0.938 | 23.83 | 171.08 | 254.57 | 16.124 | 409.34 |
| | | 100 | 1.156 | 29.36 | 208.15 | 309.64 | 15.688 | 398.28 |
| | | 120 | 1.375 | 34.93 | 244.37 | 363.58 | 15.250 | 387.14 |
| | | 140 | 1.562 | 39.67 | 274.48 | 408.28 | 14.876 | 377.66 |
| | | 160 | 1.781 | 45.24 | 308.79 | 459.39 | 14.438 | 366.52 |
| 20 500 | 20.000 508 | 10S | 0.218 | 5.54 | 46.10 | 68.61 | 19.564 | 496.92 |
| | | 10 | 0.250 | 6.35 | 52.78 | 78.56 | 19.500 | 495.30 |
| | | STD 20 40S | 0.375 | 9.53 | 78.67 | 117.15 | 19.250 | 488.94 |
| | | XS 30 80S | 0.500 | 12.70 | 104.23 | 155.13 | 19.000 | 482.60 |
| | | 40 | 0.594 | 15.09 | 123.23 | 183.43 | 18.812 | 477.82 |
| | | 60 | 0.812 | 20.62 | 166.56 | 247.84 | 18.376 | 466.76 |
| | | 80 | 1.031 | 26.19 | 209.06 | 311.19 | 17.938 | 455.62 |
| | | 100 | 1.281 | 32.54 | 256.34 | 381.55 | 17.438 | 442.92 |
| | | 120 | 1.500 | 38.10 | 296.65 | 441.52 | 17.000 | 431.80 |
| | | 140 | 1.750 | 44.45 | 341.41 | 508.15 | 16.500 | 419.10 |
| | | 160 | 1.969 | 50.01 | 379.53 | 564.85 | 16.062 | 407.98 |
| 22 550 | 22.000 559 | 10S | 0.218 | 5.54 | 50.76 | 75.55 | 21.564 | 547.92 |
| | | 10 | 0.250 | 6.35 | 58.13 | 86.55 | 21.500 | 546.30 |
| | | STD 20 40S | 0.375 | 9.53 | 86.69 | 129.14 | 21.250 | 539.94 |
| | | XS 30 80S | 0.500 | 12.70 | 114.92 | 171.10 | 21.000 | 533.60 |
| | | 60 | 0.875 | 22.23 | 197.60 | 294.27 | 20.250 | 514.54 |
| | | 80 | 1.125 | 28.58 | 251.05 | 373.85 | 19.750 | 501.84 |
| | | 100 | 1.375 | 34.93 | 303.16 | 451.45 | 19.250 | 489.14 |
| | | 120 | 1.625 | 41.28 | 353.94 | 527.05 | 18.750 | 476.44 |
| | | 140 | 1.875 | 47.63 | 403.38 | 600.67 | 18.250 | 463.74 |
| | | 160 | 2.125 | 53.98 | 451.49 | 672.30 | 17.750 | 451.04 |

| NOMINAL PIPE SIZE | OD | SCHEDULE DESIGNATIONS | WALL THICKNESS | | WEIGHT | | ID | |
|---|---|---|---|---|---|---|---|---|
| INCH MM | INCH MM | ASME | INCH | MM | LBS/ FOOT | KG/ METER | INCH | MM |
| 24 600 | 24.000 610 | 10 10S | 0.250 | 6.35 | 63.47 | 94.53 | 23.500 | 597.30 |
| | | STD 20 40S | 0.375 | 9.53 | 94.71 | 141.12 | 23.250 | 590.94 |
| | | XS 80S | 0.500 | 12.70 | 125.61 | 187.07 | 23.000 | 584.60 |
| | | 30 | 0.562 | 14.27 | 140.81 | 209.65 | 22.876 | 581.46 |
| | | 40 | 0.688 | 17.48 | 171.45 | 255.43 | 22.624 | 575.04 |
| | | 60 | 0.969 | 24.61 | 238.57 | 355.28 | 22.062 | 560.78 |
| | | 80 | 1.219 | 30.96 | 296.86 | 442.11 | 21.562 | 548.08 |
| | | 100 | 1.531 | 38.89 | 367.74 | 547.74 | 20.938 | 532.22 |
| | | 120 | 1.812 | 46.02 | 429.79 | 640.07 | 20.376 | 517.96 |
| | | 140 | 2.062 | 52.37 | 483.57 | 720.19 | 19.876 | 505.26 |
| | | 160 | 2.344 | 59.54 | 542.64 | 808.27 | 19.312 | 490.92 |
| 26 650 | 26.000 660 | 10 | 0.312 | 7.92 | 85.68 | 127.36 | 25.376 | 644.16 |
| | | STD 40S | 0.375 | 9.53 | 102.72 | 152.88 | 25.250 | 640.94 |
| | | XS 80S | 0.500 | 12.70 | 136.30 | 202.74 | 25.000 | 634.60 |
| 28 700 | 28.000 711 | 10 | 0.312 | 7.92 | 92.35 | 137.32 | 27.376 | 695.16 |
| | | STD 40S | 0.375 | 9.53 | 110.74 | 164.86 | 27.250 | 691.94 |
| | | XS 20 80S | 0.500 | 12.70 | 146.99 | 218.71 | 27.000 | 685.60 |
| | | 30 | 0.625 | 15.88 | 182.90 | 272.23 | 26.750 | 679.24 |
| 30 750 | 30.000 762 | 10 | 0.312 | 7.92 | 99.02 | 147.29 | 29.376 | 746.16 |
| | | STD 40S | 0.375 | 9.53 | 118.76 | 176.85 | 29.250 | 742.94 |
| | | XS 20 80S | 0.500 | 12.70 | 157.68 | 234.68 | 29.000 | 736.60 |
| | | 30 | 0.625 | 15.88 | 196.26 | 292.20 | 28.750 | 730.24 |
| 32 800 | 32.000 813 | 10 | 0.312 | 7.92 | 105.69 | 157.25 | 31.376 | 797.16 |
| | | STD | 0.375 | 9.53 | 126.78 | 188.83 | 31.250 | 793.94 |
| | | XS 20 | 0.500 | 12.70 | 168.37 | 250.65 | 31.000 | 787.60 |
| | | 30 | 0.625 | 15.88 | 209.62 | 312.17 | 30.750 | 781.24 |
| | | 40 | 0.688 | 17.48 | 230.29 | 342.94 | 30.624 | 778.04 |
| 34 850 | 34.000 864 | 10 | 0.312 | 7.92 | 112.36 | 167.21 | 33.376 | 848.16 |
| | | STD | 0.375 | 9.53 | 134.79 | 200.82 | 33.250 | 844.94 |
| | | XS 20 | 0.500 | 12.70 | 179.06 | 266.63 | 33.000 | 838.60 |
| | | 30 | 0.625 | 15.88 | 222.99 | 332.14 | 32.750 | 832.24 |
| | | 40 | 0.688 | 17.48 | 245.00 | 364.92 | 32.624 | 829.04 |
| 36 900 | 36.000 914 | 10 | 0.312 | 7.92 | 119.03 | 176.97 | 35.376 | 898.16 |
| | | STD | 0.375 | 9.53 | 142.81 | 212.57 | 35.250 | 894.94 |
| | | XS | 0.500 | 12.70 | 189.75 | 282.29 | 35.000 | 888.60 |
| 42 1050 | 42.000 1067 | STD | 0.375 | 9.53 | 166.86 | 248.53 | 41.250 | 1047.94 |
| | | XS | 0.500 | 12.70 | 221.82 | 330.21 | 41.000 | 1041.60 |
| | | | 0.625 | 15.88 | 276.44 | 411.64 | 40.750 | 1035.24 |
| | | | 0.750 | 19.05 | 330.72 | 492.33 | 40.500 | 1028.90 |
| 48 1200 | 48.000 1219 | STD | 0.375 | 9.53 | 190.92 | 284.25 | 47.250 | 1199.94 |
| | | XS | 0.500 | 12.70 | 253.89 | 377.81 | 47.000 | 1193.60 |

## PIPING • TUBING • FITTINGS FLANGES • RELATED PRODUCTS

| | |
|---|---|
| Type | Seamless & Welded |
| Commodity | Chrome • Stainless • Carbon • Low Temperature |
| Specifications | A/SA335 • A/SA312 • A/SA213 • A/SA106 • A/SA53/API5L • A/SA333 |
| Sizes (O.D.) | 1/8" (3.175mm) - 60" (1524mm) (Larger ODs Available) |
| Grades | Chrome: P1 • P5 • P9 • P11 • P22 • P91<br>Stainless: 304 • 304H • 304L • 316 • 316H • 316L • 316LN • 321 • 321H • 347 • 347H • 310 • 310s • 309 • Alloy 20<br>Low Temp: Grade 1/6 • Grade 3<br>Carbon: Grade B • Grade C • Galvanized |

## MILITARY SPEC PIPE & TUBING

| | |
|---|---|
| Program | MIL-I-45208A Quality Program • Approved Level 1 Supplier |
| Contact Tioga for | U.S. Navy Specifications • Navy Nuclear • MIC Level 1 • Ultrasonic Testing |
| Fittings & Flanges | All Fittings & Flanges to Match the Pipe |

## NUCLEAR MATERIALS

| | |
|---|---|
| Program | ASME Section III - ASME QSC 467 |
| Specifications | 10CFR50 Appendix B • N45.2 • NQA-1 • U.S. Navy Nuclear Specifications |
| Products | Pipe • Tubing • Fittings • Flanges • Structurals • Fasteners • Forgings • Castings • Weld Rod • Plate |
| Grades | Carbon • Stainless • Chrome Moly • Nickel Alloys • Duplex • 6 Moly Alloys • Low Temperature • Special Melts • Copper & Titanium |

## SPECIALTY ALLOYS

| | |
|---|---|
| Type | Seamless & Welded |
| Commodity | Nickel • Duplex & Titanium |
| Specifications & Grades | Alloy 800 • Alloy 825 • Alloy 600 • Alloy 625 • Alloy 400 • 6% Moly Grades • Duplex A790 UNS 31803 • 316LN |
| Sizes (O.D.) | 1/8" (3.175mm) - 8" (203.2mm) |
| Wall Dimensions | 0.035" (.889mm) - 0.875" (22.23mm) |

## TIOGA SPECIALTIES

- Project Management
- 24/7 Emergency Service
- Just-In-Time Programs
- Inventory in Stock
- All Schedule Walls
- Special Heavy Walls to 4" (101.6mm)
- Header Pipe to 4" Wall (101.6mm)
- Special Intermediate Walls
- Average & Minimum Walls
- Saw Cut up to 40" (1016mm)
- Cutting: Square & Miter
- Custom Lengths and OD's
- End Preps-Various
- Hard to Find Metals & Sizes
- Se Habla Español
- Exceptional Mill/Sourcing Relations
- Dedicated Project Solution Teams
- Vendor Managed Inventory Programs
- Mobile On-Site Inventory Programs
- Quick Response Programs
- Low Total Cost Solutions
- International Export & Packaging
- EN PED 97/23/EC
- ISO 9001-2008
- MIC Level 1 Supplier
- In-House Testing
- Destructive Examination
- Non-Destructive Examination
- In-House Hydrostatic Testing
- Full EDI Capabilities
- Customized e-business Solutions
- Emergency Forged and Buttweld Fittings

Note: Actual dimensions can vary from the figures based on specifications/manufacturing tolerances. The Data for weight is based on the following calculation for wrought steel pipe:
LB/Foot = (Outside diameter [in.] – Wall Thickness [in.]) x (Wall Thickness [in.]) x (10.69)
KG/Meter = (Outside diameter [mm] – Wall Thickness [mm]) x (Wall Thickness [mm]) x (0.0246615)

Equal Opportunity Employer © Tioga Pipe, Inc. 12/2013

When it has to be right.™

Call the center of your choice for our 24-hour emergency service

tiogapipe.com

Tioga™

# Factor of safety

REFERENCE 2

Bearing capacity of shallow foundations

A factor of safety $F_s$ is used to calculate the allowable bearing capacity $q_a$ from the ultimate bearing pressure $q_f$. The value of $F_s$ is usually taken to be 2.5 - 3.0.

$$F_s = \frac{q_f - q_o}{q_a - q_o} \quad q_a = \frac{q_f - q_o}{F_s} + q_o$$

The factor of safety should be applied only to the increase in stress, i.e. the net bearing pressure $q_n$. Calculating $q_a$ from $q_f$ only satisfies the criterion of safety against shear failure. However, a value for $F_s$ of 2.5 - 3.0 is sufficiently high to empirically limit settlement. It is for this reason that the factors of safety used in foundation design are higher than in other areas of geotechnical design. (For slopes, the factor of safety would typically be 1.3 - 1.4).

Experience has shown that the settlement of a typical foundation on soft clay is likely to be acceptable if a factor of 2.5 is used. Settlements on stiff clay may be quite large even though ultimate bearing capacity is relatively high, and so it may be appropriate to use a factor nearer 3.0.

---

# Presumed bearing values

Bearing capacity

For preliminary design purposes, BS 8004 gives presumed bearing values which are the pressures which would normally result in an adequate factor of safety against shear failure for particular soil types, but without consideration of settlement.

| Category | Types of rocks and soils | Presumed bearing value |
|---|---|---|
| Non-cohesive soils | Dense gravel or dense sand and gravel | >600 kN/m² |
| | Medium dense gravel,<br>or medium dense sand and gravel | <200 to 600 kN/m² |
| | Loose gravel, or loose sand and gravel | <200 kN/m² |
| | Compact sand | >300 kN/m² |
| | Medium dense sand | 100 to 300 kN/m² |
| | Loose sand | <100 kN/m² *depends on degree of looseness* |
| Cohesive soils | Very stiff bolder clays & hard clays | 300 to 600 kN/m² |
| | Stiff clays | 150 to 300 kN/m² |
| | Firm clay | 75 to 150 kN/m² |
| | Soft clays and silts | < 75 kN/m² |
| | Very soft clay | Not applicable |
| Peat | | Not applicable |
| Made ground | | Not applicable |

## Presumed bearing values for Keuper Marl

| Weathering | Zone | Description | Presumed bearing value |
|---|---|---|---|
| | | | |

| | | | |
|---|---|---|---|
| Fully weathered | IVb | Matrix only | as cohesive soil |
| Partially weathered | IVa | Matrix with occasional pellets less than 3mm | 125 to 250 kN/m² |
| | III | Matrix with lithorelitics up to 25mm | 250 to 500 kN/m² |
| | II | Angular blocks of unweathered marl with virtually no matrix | 500 to 750 kN/m² |
| Unweathered | 1 | Mudstone (often not fissured) | 750 to 1000 kN/m² |

REFERENCE 2

---

# Bearing capacity of piles

Bearing capacity


- Driven piles in non-cohesive soil
- Bored piles in non-cohesive soil
- Driven piles in cohesive soil
- Bored piles in cohesive soil
- Carrying capacity of piles in a layered soil
- Effects of ground water


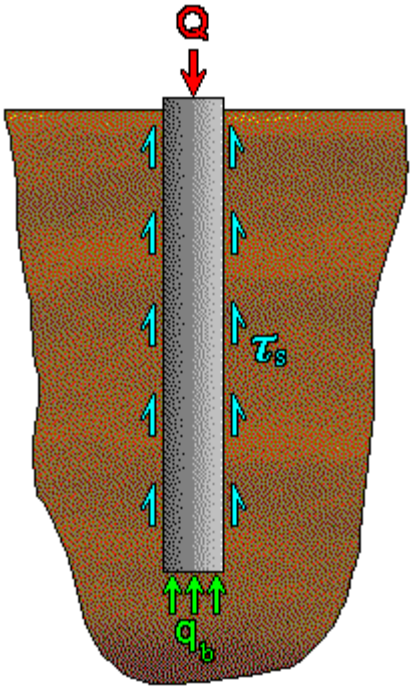


The ultimate bearing capacity of a pile used in design may be one three values:
the **maximum load $Q_{max}$**, at which further penetration occurs without the load increasing;
a **calculated value $Q_f$** given by the sum of the end-bearing and shaft resistances;
or the load at which a **settlement of 0.1 diameter** occurs (when $Q_{max}$ is not clear).

For large-diameter piles, settlement can be large, therefore a safety factor of 2-2.5 is usually used on the working load.

A pile loaded axially will carry the load:
partly by shear stresses ($t_s$) generated along the shaft of the pile and
partly by normal stresses ($q_b$) generated at the base.
The ultimate capacity $Q_f$ of a pile is equal to the base capacity $Q_b$ plus the shaft capacity $Q_s$.

$$Q_f = Q_b + Q_s = A_b \cdot q_b + {}^{S}(A_s \cdot t_s)$$

where $A_b$ is the area of the base and $A_s$ is the surface area of the shaft within a soil layer.

Full shaft capacity is mobilised at much smaller displacements than those related to full base resistance. This is important when determining the settlement response of a pile. The same overall bearing capacity may be achieved with a variety of combinations of pile diameter and length. However, a long slender pile may be shown to be more efficient than a short stubby pile. Longer piles generate a larger proportion of their full capacity by skin friction and so their full capacity can be mobilised at much lower settlements.

The proportions of capacity contributed by skin friction and end bearing do not just depend on the geometry of the pile. The type of construction and the sequence of soil layers are important factors.